SEWERAGE and WATER BOARD

of

NEW ORLEANS

VOLUME 2

SPECIFICATIONS & REFERENCE INFORMATION

OF THE

CONTRACT DOCUMENTS

FOR

CONTRACT 1444

CARROLLTON WATER PURIFICATION PLANT
WEST POWER COMPLEX FUEL OIL DELIVERY SYSTEM

August 2026

INDEX OF CONTRACT DOCUMENTS
FOR
CONTRACT 1444
CARROLLTON WATER PURIFICATION PLANT
WEST POWER COMPLEX FUEL OIL DELIVERY SYSTEM

VOLUME	DESCRIPTION
VOLUME 1	**PROCUREMENT AND CONTRACTING**
VOLUME 2	**SPECIFICATIONS & REFERENCE INFORMATION**
VOLUME 3	**CONTRACT DRAWINGS**
VOLUME 4	**STANDAND AND REFERENCE DRAWINGS**

SEWERAGE and WATER BOARD

of

NEW ORLEANS

VOLUME 2, PART 1

TECHNICAL SPECIFICATIONS

FOR

CONTRACT 1444

WEST POWER COMPLEX FUEL OIL DELIVERY SYSTEM

SEWERAGE and WATER BOARD
NEW ORLEANS

CONTRACT 1444
WEST POWER COMPLEX @ CWPT – FUEL OIL DELIVERY SYSTEM

SECTION 00 01 07
SEALS PAGE

TECHNICAL SPECIFICATIONS — Joseph K. Bondank, P.E. No. 0036160



DIVISION 01 – GENERAL REQUIREMENTS
01 11 01
01 26 00
01 29 00
01 31 13
01 31 19
01 32 00
01 33 00
01 42 13
01 43 33
01 45 16.13
01 50 00
01 57 13
01 58 53
01 61 00
01 77 00
01 91 14

DIVISION 25 – INTEGRATED AUTOMATION
25 05 11

DIVISION 27 – COMMUNICATIONS
27 15 13
27 15 23

DIVISION 40 – PROCESS INTERCONNECTIONS
40 90 00
40 90 10
40 90 20
40 90 40
40 91 00

SEWERAGE and WATER BOARD
NEW ORLEANS

CONTRACT 1444
WEST POWER COMPLEX @ CWPT – FUEL OIL DELIVERY SYSTEM

SECTION 00 01 07
SEALS PAGE

TECHNICAL SPECIFICATIONS

Dean Brookins, P.E. No. 0038750

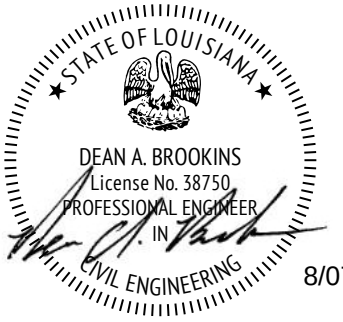

8/07/2026

DIVISION 01 – GENERAL REQUIREMENTS
01 45 36
01 88 15

DIVISION 03 – CONCRETE
03 60 00

DIVISION 05 – METALS
05 00 10
05 05 19
05 05 23
05 10 00
05 12 00
05 52 19
05 53 00

DIVISION 09 – FINISHES
09 90 01

SEWERAGE and WATER BOARD
NEW ORLEANS

CONTRACT 1444
WEST POWER COMPLEX @ CWPT – FUEL OIL DELIVERY SYSTEM

SECTION 00 01 07
SEALS PAGE

TECHNICAL SPECIFICATIONS — Sarah A. Stallings, P.E. No. 0046647

DIVISION 01 – GENERAL REQUIREMENTS
01 73 20
01 78 23

DIVISION 23 – HEATING, VENTILATING, AND AIR CONDITIONING (HVAC)
23 13 13.33

DIVISION 40 – PROCESS INTERCONNECTIONS
40 50 20
40 55 00

DIVISION 48 – ELECTRICAL POWER GENERATION
48 00 10
48 50 90
48 58 68

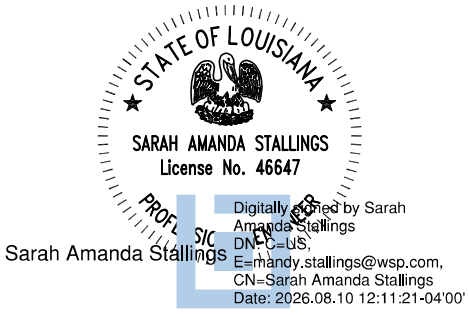

SEWERAGE and WATER BOARD
NEW ORLEANS

CONTRACT 1444
WEST POWER COMPLEX @ CWPT – FUEL OIL DELIVERY SYSTEM

SECTION 00 01 07
SEALS PAGE

TECHNICAL SPECIFICATIONS — Laura Eyman Kelly, P.E. No. 0039645

DIVISION 15 – MECHANICAL
15 34 42

DIVISION 31 – EARTHWORK
31 20 00
31 23 16
31 23 23
31 41 00

DIVISION 40 – PROCESS INTERCONNECTIONS
40 50 20
40 55 00

DIVISION 48 – ELECTRICAL POWER GENERATION
48 00 10
48 50 90
48 58 68



SEWERAGE and WATER BOARD
NEW ORLEANS

CONTRACT 1444
WEST POWER COMPLEX @ CWPT – FUEL OIL DELIVERY SYSTEM

SECTION 00 01 07
SEALS PAGE

TECHNICAL SPECIFICATIONS — John C. Lawrence, P.E. No. 0027941

DIVISION 26 – ELECTRICAL
26 00 00
26 00 10
26 05 04
26 05 19
26 05 26
26 05 29
26 05 33
26 05 44
26 05 53
26 26 13
26 50 00

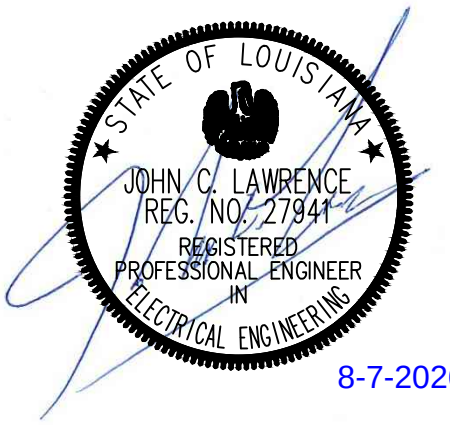

SEWERAGE and WATER BOARD
NEW ORLEANS

CONTRACT 1444
WEST POWER COMPLEX @ CWPT – FUEL OIL DELIVERY SYSTEM

SECTION 00 01 07
SEALS PAGE

TECHNICAL SPECIFICATIONS — Lane Richard, P.E. No. 0047786

DIVISION 01 – GENERAL REQUIREMENTS
01 73 20
01 78 23

DIVISION 13 – SPECIAL CONSTRUCTION
13 30 00

DIVISION 23 – HEATING, VENTILATING, AND AIR CONDITIONING (HVAC)
23 12 13

DIVISION 40 – PROCESS INTERCONNECTIONS
40 50 20
40 55 00

DIVISION 48 – ELECTRICAL POWER GENERATION
48 00 10
48 50 90
48 58 68



SIGNED 08/07/2026

SEWERAGE and WATER BOARD
NEW ORLEANS

CONTRACT 1444
WEST POWER COMPLEX @ CWPT – FUEL OIL DELIVERY SYSTEM

SECTION 00 01 07
SEALS PAGE

TECHNICAL SPECIFICATIONS — Malcolm York Brogden, P.E. No. 0041618

DIVISION 25 – INTEGRATED AUTOMATION
25 05 11

DIVISION 40 – PROCESS INTERCONNECTIONS
40 92 13
40 94 23
40 94 24
40 94 25
40 95 33

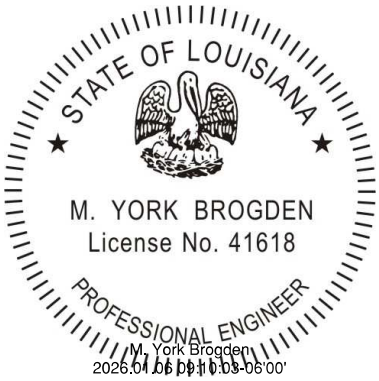

C1444
WEST POWER COMPLEX @ CWTP
FUEL OIL DELIVERY SYSTEM

TABLE OF CONTENTS

TECHNICAL SPECIFICATIONS

DIVISION 1—GENERAL REQUIREMENTS

01 11 01	Project Summary of Work	1-3
01 26 00	Contract Modification Procedures	1-4
	Attachment A, Contract Change Order Tier Summary	
	Attachment B, Change Order Flow Chart	
	Attachment C, Instruction to Contractor (ITC) Template	
	Attachment D, Work Change Directive (WCD) Template	
	Attachment E, Change Order Template	
01 29 00	Payment Procedures	1-3
01 31 13	Project Coordination	1-10
01 31 19	Project Meetings	1-4
01 32 00	Large Construction Progress Documentation	1-12
01 33 00	Submittal Procedures	1-8
	Supplement 1, Records Management Status Stamp	1-4
01 42 13	Abbreviations and Acronyms	1-6
01 43 33	Manufacturer's Field Services	1-7
01 45 16.13	Contractor Quality Control	1-14
01 45 36	Equipment Seismic Certification	1-6
01 50 00	Temporary Facilities and Controls	1-8
01 57 13	Temporary Erosion and Sediment Control	1-7
01 58 53	Project Equipment Identification	1-4
01 61 00	Common Product Requirements	1-14
01 73 20	Mechanical Equipment Installation	1-19
01 77 00	Closeout Procedures	1-4
01 78 23	Operation Maintenance Data	1-8
01 88 15	Anchorage and Bracing	1-6
01 91 14	Equipment Testing Facility Startup	1-15

DIVISION 3—CONCRETE

03 60 00	Structural and Equipment Grouting	1-10

DIVISION 5—METALS

05 00 10	Structural Summary of Work	1-2
05 05 19	Post-Installed Anchors	1-10
05 05 23	Welding	1-7
05 10 00	Erection of Structural and Miscellaneous Steel	1-12
05 12 00	Supply and Fabrication of Structural and Miscellaneous Steel	1-15
05 52 19	Steel Railings	1-8

C1444
WEST POWER COMPLEX @ CWTP
FUEL OIL DELIVERY SYSTEM

05 53 00 Metal Gratings 1-6

DIVISION 9—FINISHES

09 90 01 Painting Protective Coatings..... 1-22

DIVISION 13—SPECIAL CONSTRUCTION

13 30 00 Staging Lifting Plan 1-4

DIVISION 15—MECHANICAL

15 34 42 Underground Piping..... 1-39

DIVISION 23—HEATING, VENTILATING, AND AIR CONDITIONING (HVAC)

23 12 13 Fuel Oil Transfer Equipment 1-19
23 13 13 33 Fuel Oil Forwarding Pump Skid..... 1-34

DIVISION 25—INTEGRATED AUTOMATION

25 05 11 Cybersecurity for Facility Related Control Systems 1-10

DIVISION 26—ELECTRICAL

26 00 00 Electrical General Requirement..... 1-9
26 00 10 Electrical Summary of Work 1-5
26 05 04 Electrical Requirements for Packaged Mechanical Equipment..... 1-10
26 05 19 Low-Voltage Electrical Power Conductors and Cables..... 1-5
26 05 26 Grounding and Bonding for Electrical Systems 1-7
26 05 29 Hangers and Supports for Electrical Systems..... 1-6
26 05 33 Raceways and Boxes for Electrical Systems 1-12
26 05 44 Sleeves & Sleeve Seals for Electrical Raceways & Cabling . 1-3
26 05 53 Identifications for Electrical Systems 1-10
26 26 13 Low Voltage AC Induction Motors 1-8
Supplement 1, Data Sheet
26 50 00 Lighting..... 1-7

DIVISION 27—COMMUNICATIONS

27 15 13 Communications Copper Horizontal Cabling..... 1-14
27 15 23 Communications Optical Fiber Horizontal Cabling 1-12

C1444
WEST POWER COMPLEX @ CWTP
FUEL OIL DELIVERY SYSTEM

DIVISION 31—EARTHWORK

31 20 00	Earthwork	1-7
31 23 16	Excavation	1-4
31 23 23	Fill and Backfill	1-7
31 41 00	Shoring	1-2

DIVISION 40—PROCESS INTERCONNECTIONS

40 50 20	Above Ground Power Plant Piping	1-31
	Supplement 1, Mechanical Line List	
	Supplement 2, Pipe Specification Tables	
40 55 00	Power Plant Valves	1-12
	Supplement 1, Valve List	
40 90 00	I&C General Requirements	1-53
40 90 10	I&C Summary of Work	1-5
40 90 20	Instrument Installation	1-26
40 90 40	I&C for Packaged Mechanical Equipment	1-9
40 91 00	I&C Components	1-44
	Supplement 1, I/O and Instrument List	
40 92 13	Process Control Valves and Regulators	1-29
	Supplement 1, Valve Datasheets	
40 94 23	Balance of Plant Control System	1-38
40 94 24	PSS Human Machine Interface	1-10
	Supplement 1, PDCS HMI Graphics Standards	
40 94 25	Data Exchange Interface	1-18
40 95 33	Process Control Networks	1-8

DIVISION 48—ELECTRICAL POWER GENERATION

48 00 10	Mechanical Summary of Work	1-3
48 50 90	Cathodic Protection	1-14
48 58 68	Welding Power Plant Piping	1-8

INTENTIONALLY LEFT BLANK

SECTION 01 11 01
PROJECT SUMMARY OF WORK

PART 1 GENERAL

1.01 PROJECT BACKGROUND

A. The Carrollton Water Treatment Plant (CWTP) provides purified drinking water for Orleans Parish east of the Mississippi River. The entrance to this connected building complex is located on Eagle Street, which is accessed from South Claiborne Avenue.

B. Power to the CWTP is provided by the co-located CWTP power plant, which consists of power generators and local utility feeds located within a group of connected buildings that serve as a building complex. For power resiliency, a new 230-kV substation and a new West Power Complex (WPC) is to be installed at the CWTP.

C. Within the CWTP, existing basins C7 and C8 have been repurposed to prepare the basins for the new WPC and Entergy 230-kV Sullivan substation. The C7 and C8 basins have been repurposed under a separate contract and the work is complete.

D. The WPC consists of a new combustion turbine generator (CTG), space for two future CTG's, new static frequency converters (SFC) to convert 60-Hz power to 25-Hz power, a new Operations Center (OPS), new balance of plant (BOP) equipment to support the major equipment of the WPC, a new Utility Rack to support utility connections between the WPC and the existing CWP plant, new tie-ins to the existing plant, and interconnection to the new Entergy Substation and the existing SWBNO-owned Claiborne, Sycamore, and Hamilton Substations.

1.02 PROJECT CONSIDERATIONS

A. C1444 construction work shall occur concurrently with other onsite construction activities. To maintain the overall construction schedule, the anticipated milestones for the C1444 installation are listed in a separate Milestone Schedule section of these contract specifications. Special attention shall be given to adjacent existing structures and underground infrastructure.

B. The WPC Work shall be performed by multiple entities under multiple contracts, and to the Contractor shall proactively coordinate the C1444 Work with the expectation that all Work shall affect the Work of other involved entities.

1.03 PROJECT SCOPE OF WORK

A. Contract 1444 includes the installation of the backup fuel oil system that shall be used to support the new combustion turbine generators (CTG's) for the new West Power Complex (WPC) at the Carrollton Water Treatment Plant (CWTP).

B. Contract 1444 generally includes the provision of the following:

- Fuel oil return pump skid
- Fuel oil forwarding pump skid
- Structural steel platform for fuel oil forwarding pump skid
- Aboveground and underground fuel oil piping
- Valves, instrumentation
- Cathodic protection
- Leak detection system
- Electrical power and grounding to pump skids and leak detection components
- Communication circuits from existing plant controllers to new equipment
- Integration of new systems into the existing plant control system
- Pipe supports and electrical raceway supports
- Initial fill of fuel oil to be used during testing/commissioning.
- Testing and commissioning of fuel oil system.

C. Design, planning, procurement, assembly, testing, delivery, installation and commissioning of all specified equipment, materials, and subcontracts to complete the Work.

D. Sitework shall include, but not be limited to, location and protection of existing utilities and underground installations, surveying, traffic control, excavation, trenching, boring, dewatering, geotextile fabric repair or replacement, environmental protection, backfill, grading and drainage.

PART 2 PRODUCTS (NOT USED)

PART 3 EXECUTION

3.01 GENERAL

A. The individual components and equipment shall be commissioned and tested as required by applicable codes, standards, the specification sections and the detailed scopes of work. All criteria shall be met for acceptance by Owner.

END OF SECTION

INTENTIONALLY LEFT BLANK

SECTION 01 26 00
CONTRACT MODIFICATION PROCEDURES

PART 1 GENERAL

1.01 DEFINITIONS

A. Owner – The Sewerage and Water Board of New Orleans (SWBNO).

B. Engineer – The entity or individual who is to act as the Engineer-of Record under the oversight and administration of the Owner. The term Engineer may refer to a third-party Engineering Firm or a (SWBNO) department or individual.

C. Instruction to Contractor (ITC) – A document or written communication issued by the Owner or Engineer directing the Contractor to prepare a proposal for a Change Order. An ITC may or may not influence the Contract Price or Times. An ITC may also be issued to clarify the drawings, specifications, or procedures.

D. Change Order Request (COR) – A formal proposal written by the Contractor that requests changes to the Contract Price and/or Contract Times. Document will include reference number for tracking purposes and detailed description of and reason for proposed change, and such additional information as appropriate and as may be required for Contractor to accurately estimate cost and time impact on Project. Change to Contract Times shall prove impact to the critical path of the project.

E. Work Change Directive (WCD) – A written statement to Contractor signed by the Owner, recommended by the Engineer and acknowledged by the Contractor, ordering an addition, deletion, or revision in the Work, or responding to emergencies or differing or unforeseen conditions under which the Work is to be performed. A Work Change Directive will not change the Contract Price or Contract Times but is evidence that the parties expect that the change ordered will be incorporated in a subsequently issued Change Order following negotiations by the parties as to its effect, if any, on the Contract Price or Times.

F. Field Change Order (FCO) – A document formalizing the approval of a Change Order. This document will include all paperwork submitted by the Contractor and Engineer to initiate the change, including the WCD or ITC, the COR, all supporting documentation submitted by the Contractor, and an analysis of the changes requested by the Engineer justifying the increase/decrease to the Contract Prices/Times. Multiple FCOs may be combined into a single Change Order as defined below.

G. Change Order – A document authorizing an addition, deletion, or revision in the Work or an adjustment in the Contract Price or the Contract Times. Approval of a Change Order is determined by SWBNO Policy and may be modified. Table 12-1 is included at the end of this document for reference on the Signature

authority for Change Orders. This Table was approved by Board Resolution R-063-2021. This approval may be either a Board of Directors Resolution or an Executive Director's Change Authority document. A Change Order may consist of multiple changes to Contract Price and/or Times that would be memorialized in multiple Field Change Orders (FCOs) if necessary.

H. Request for Information (RFI) – A written request, from the Contractor to the Engineer and/or Owners that asks for additional information or to clarify some aspect of the project, such as procedures, equipment, materials, specification details or drawing details.

I. Work – The entire construction or the various separately identifiable parts thereof required to be provided under the Contract Documents. Work includes and is the result of performing or providing all labor, services, and documentation necessary to produce such construction, and furnishing, installing, and incorporating all materials and equipment into such construction, all as required by the Contract Documents.

J. Reference the General Conditions and Supplementary Conditions for definitions not provided above.

1.02 INSTRUCTION TO CONTRACTOR (ITC)

A. Owner may, in anticipation of ordering an addition, deletion, or revision to the Work, request Contractor to prepare a detailed proposal of cost and times to perform contemplated change via an ITC.

B. The ITC will include a reference number for tracking purposes and detailed description of and reason for proposed change, and such additional information as appropriate and as may be required for Contractor to accurately estimate cost and time impact on Project.

C. Proposal requests via ITCs are for information only. Contractor is neither authorized to execute a proposed change nor to stop Work in progress as result of such request.

D. Contractor's written proposal shall be transmitted to Engineer for their review no later than 10 business days after Contractor's receipt of ITC.

E. Owner's request for proposal or Contractor's failure to submit such proposal within the required time period will not justify a Claim for an adjustment in Contract Price or Times.

1.03 CHANGE ORDER REQUEST (COR)

A. Include, at a minimum as part of the Contractor's Change Order Request (COR),

a. Specific references including Drawing numbers, Specification section and article/paragraph number, and Submittal type, Submittal number, date reviewed, Engineer's comment, as applicable, with appropriate attachments.
b. Stipulated facts and pertinent documents, including photographs and statements.
c. Interpretations relied upon
d. Description of nature and extent of Claim, who or what caused the situation, impact to the Work and work of others, and discussion of claimant's justification for requesting a change to Contract Price or Times or both.
e. Estimated adjustment in price claimant believes it is entitled to with full documentation and justification. Estimate is to be detailed in nature, addressing all elements, materials, parts, equipment, labor, components, and the like affected by and/or incorporated into the Work as a result of the claimed adjustment.
f. Requested Change in Contract Times: include at least progress schedule documentation showing logic diagram for request, documentation that float times available for Work have been used, and revised activity logic with durations including sub-network logic revisions, duration changes, and other interrelated schedule impacts, as appropriate.
g. Documentation and/or information as may be necessary as set forth below for Work Change Directive, and as Engineer may otherwise require.

B. For Work that will be performed by subcontract, Contractor shall submit for approval subcontractor's proposal that clearly reflects the scope and schedule of the respective modification. For Work that requires the retention of a new subcontractor not currently working on the project, Contractor shall submit three independent quotes clearly reflecting the scope of the respective modification. Additional supporting information as requested by the Engineer shall be provided within 5 business days of request.

C. For Work that is to be self-performed, the Contractor shall provide a detailed breakdown of the Work by labor, materials and equipment, detailing the labor force, equipment requirements, and pricing for the required materials. Labor rates are to be consistent with the wage rate schedule included within these Documents, and equipment rates are to be consistent with those terms established in the General and Supplementary Conditions, and expanded on herein below, as applicable. Again, additional supporting information as requested by the Engineer shall be provided within 5 business days of request.

1.04 WORK CHANGE DIRECTIVES (WCD)

A. Engineer will:
a. Initiate, including a description of the Work involved and any attachments.
b. Sign and transmit electronic file to Owner for authorization.
c. Provide any additional documentation as requested per RFI.

B. Owner will:

a. Sign, demonstrating approval of the changes involved.
b. Transmit electronic copies to Engineer and Contractor.

C. Contractor will:
   a. Upon completion of Work covered by the WCD, submit COR documentation for inclusion in a Change Order.
   b. Provide documentation including, but not limited to:

      i. Detailed records of Work performed.
      ii. Information required to substantiate resulting change in Contract Times and Contract Price for Work.
      iii. Support Data such as: dates Work was performed and by whom; time records, wage rates paid, equipment rental rates; invoices and receipts for materials, equipment, and subcontracts.
         1. Subcontracted Work: supply subcontractor pricing or three independent quotes or documentation of cost reasonableness.
         2. Self-performed Work: supply pricing for materials and labor or documentation of cost reasonableness.

1.05 CHANGE ORDERS

A. Engineer will prepare one electronic copy of proposed Change Order and transmit such with Engineer's written recommendation based on one or multiple Field Change Orders.

B. Upon receipt of recommended Change Order, Owner will either:
   a. Execute Change Order, or
   b. Return to Engineer unsigned copies with written justification for not executing Change Order.

C. Upon receipt of Owner-executed Change Order, Engineer will transmit electronic packages to the Contractor, the Resident Project Representative or other field representative, and retain the package as part of the project file, or if Owner fails to execute the Change Order, Engineer will promptly so notify Contractor and transmit Owner's justification to Contractor.

D. Upon receipt of documentation of the Owner-executed Change Order, Contractor shall:
   a. Revise Schedule of Values to adjust Contract Price and submit with next Application for Payment.
   b. Revise Progress Schedule to reflect changes in Contract Times, if any, and to adjust times for other items of Work affected by change.
   c. Enter changes in Project record documents after completion of change related Work.

E. In signing a Change Order, Owner and Contractor acknowledge and agree that:
   a. Stipulated compensation (Contract Price or Contract Times, or both) set forth includes payment for (i) the Cost of the Work covered by the Change Order, (ii) Contractor's fee for overhead and profit, (iii) interruption of Progress Schedule, (iv) delay and impact, including cumulative impact, on other Work under the Contract Documents, and (v) extended overheads.
   b. Change Order constitutes full mutual accord and satisfaction for the change to the Work.
   c. Unless otherwise stated in the Change Order, all requirements of the original Contract Documents apply to the Work covered by the Change Order.

1.06 CHANGE ORDER PROCESS SUMMARY

This Section is to be used in conjunction with the *Change Order Flowchart* included.

A. Change Condition is identified by the Contractor.

B. Contractor initiates and submits an RFI.

C. Engineer responds to RFI indicating a Change Order is necessary.

D. If the Change Condition could delay the overall project schedule by waiting for approval at the next SWBNO Board of Directors meeting, then a WCD is issued by the Engineer/Owner. Otherwise, skip to step (E).

   a. The Contractor begins Work as indicated in RFI Response/WCD.
   b. Contractor submits costs incurred as COR.
   c. If COR costs are justifiable, Engineer/Owner creates FCO for Contractor signature.
   d. Owner submits Change Order to Executive Director (ED Change Authority) or Board of Directors based on Table 12-1 copied at the end of this document.
   e. After Approval of ED Change Authority or Board of Directors Resolution, Engineer and/or Owner sign and return fully executed FCO(s) to Contractor.
   f. Contractor may include costs in the next Pay Application.

E. If the Change Condition does not impact the critical path of the project schedule, then the Engineer/Owner submits an ITC to Contractor.

   a. The Contractor takes instructions from ITC and creates a proposal to complete the Work and submits as an COR.
   b. If COR costs are justifiable, Engineer/Owner creates FCO for Contractor signature.
   c. Owner submits Change Order to Executive Director (ED Change Authority) or Board of Directors based on Table 12-1 copied at the end of this document.

d. After Approval of ED Change Authority or Board of Directors Resolution, Engineer and/or Owner sign and return fully executed FCO(s) to Contractor. Owner may concurrently issue a Notice to Proceed to Contractor for this Work.
e. Contractor may include costs as incurred in following Pay Application(s).

1.07 REFERENCE DOCUMENTS

A. Contract Change Order Tier Summary per Resolution R-063-2021 (Attachment "A")
B. Change Order Flowchart (Attachment "B")
C. Instruction to Contractor Template/Example (Attachment "C")
D. Work Change Directive Template/Example (Attachment "D")
E. Field Change Order Template/Example (Attachment "E")
F. ED Change Authority Template/Example (Attachment "F")

PART 2 PRODUCTS (NOT USED)

PART 3 EXECUTION (NOT USED)

END OF SECTION

Attachment A

Table 12-1. Contract Change Order Tier Summary

Contract Tier	Change Order Parameter	Signature Requirements
Tier One: Contract Aggregate <$1,000,000		
Change Order Scenario 1	If a change order is below 10% of the original contract value	Executive Director approves change order and SWBNO Board of Directors is notified during monthly meetings
Change Order Scenario 2	If a change order exceeds 10% of the original contract value, and total contract value remains below $1M	Executive Director approves change order and SWBNO Board of Directors is notified during monthly meetings
Tier Two: Contract Aggregate between $1,000,000 and $4,999,999.99		
Change Order Scenario 1	If a change order is less than $250,000 or 20% of the original contract value (whichever is less considering cumulative amount of change orders)	Executive Director approves change order and SWBNO Board of Directors is notified during monthly meetings
Change Order Scenario 2	If a change order or aggregate of change orders exceeds $249,999.99 or 20% of the original contract value (whichever is less considering cumulative amount of change orders)	SWBNO Board of Directors approves via F&A Committee. Executive Director signs resolution.
Tier Three: Contract Aggregate $5,000,000 and above		
Change Order Scenario 1	If a change order is less than $500,000 or 10% of the original contract value (whichever is less considering cumulative amount of change orders)	Executive Director approves change order and SWBNO Board of Directors is notified during monthly meetings
Change Order Scenario 2	If a change order or aggregate of change orders exceeds $499,999.99 or 10% of the original contract value (whichever is less considering cumulative amount of change orders)	SWBNO Board of Directors approves via F&A Committee. Executive Director signs resolution.

Attachment B

CHANGE ORDER FLOWCHART

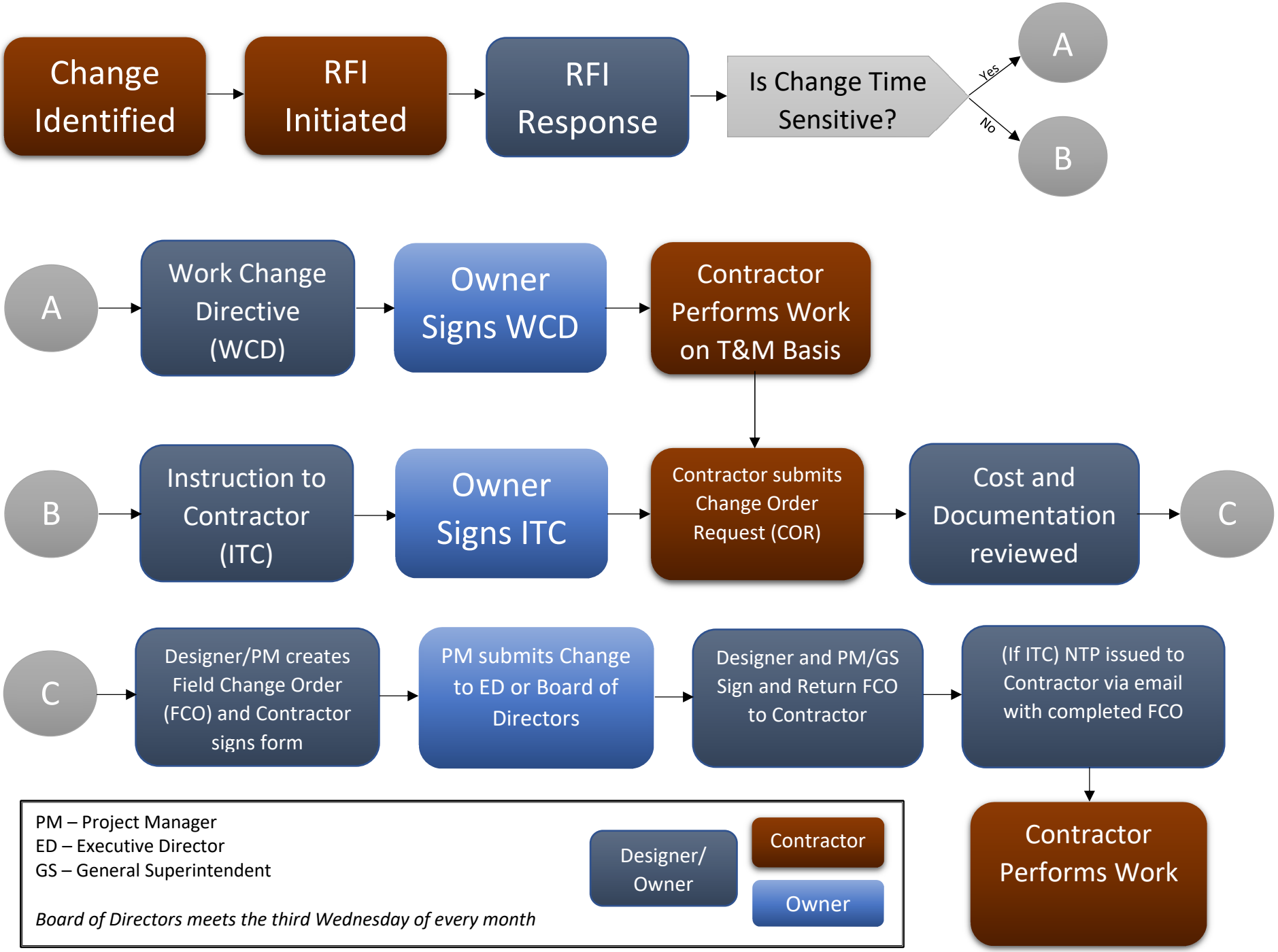

Attachment C

INSTRUCTION TO CONTRACTOR

_____ **SWBNO Contract No.:** _____
Contract Name

Reference RFI No.
(If applicable) _____

_____
Contractor

Instruction No. 001

_____
Contract Description/Specification Section

Date: _____

This instruction is issued to:

- ☐ Clarify drawings, specifications, or procedures.
- ☐ Request a proposal.
- ☐ Transmit drawings or documents for incorporation into the work.

The SWBNO is directing the Contractor to:

Recommended by Designer: _____

Authorized by Owner: _____

IF, IN THE CONTRACTOR'S OPINION, A CLARIFICATION INVOLVES WORK WHICH CHANGES THE CONTRACT PRICE OR TIME, YOU MUST SUBMIT A CHANGE ORDER REQUEST OR NOTICE AS REQUIRED IN THE CONTRACT DOCUMENTS.

Attachment D

WORK CHANGE DIRECTIVE NO.: 001

Owner: Sewerage & Water Board of New Orleans
Designer:
Contractor:
Owner's Project No.: Contract No.
Contract Name:

Date Issued: **Effective Date of Work Change Directive:**

Contractor is directed to proceed promptly with the following change(s):

Description:

Attachments:

Purpose for the Work Change Directive:

Directive to proceed promptly with the Work described herein, prior to agreeing to change in Contract Price and Contract Time, is issued due to:

☐Non-agreement on pricing of proposed change. ☐Necessity to proceed for schedule or other reasons.

Estimated Change in Contract Price and Contract Times (non-binding, preliminary):

Contract Price: _____ ☐ increase ☐ decrease ☐ not yet estimated
Contract Time: _____ days ☐ increase ☐ decrease ☐ not yet estimated

Basis of estimated change in Contract Price:

☐ Lump Sum ☐ Unit Price ☐ Cost of the Work ☐ Other

	Recommended by Designer	Authorized by Owner	Received by Contractor
By:			
Title:			
Date:			

Attachment E

SWBNO FIELD CHANGE ORDER

FCO No.	Contract No.
Project Manager	Date
Project Name	**Contractor**
	Dated _____,_____ (Year)

**You are hereby requesting to make the following (In Scope) change(s) in acordance with the terms and conditions of the above contract

((Description of Change))

FOR THE (Additive/Deductive) Sum of	**$**	**-**
Original Contract Amount	$	1,000,000.00
Sum of Previous Changes	$	3,000.00
Present Contract Amount	$	1,003,000.00
This Change Add (Deduct)	$	2,000.00
Proposed Contract Amount	$	1,005,000.00

Commencement of Contract Times	1/1/2022
Contract Time (days)	365
Original Completion Date	1/1/2023
Previous Changes to Contract Times (days)	15
This Change to Times (days)	10
Revised Contract Completion Date	1/26/2023

Your acceptance of this Change Order shall constitue a modification to our Contract and will be performed subject to all the same terms and conditions in our Contract indicated above, as fully as if the same were repeated in this acceptance.

The adjustment, if any, to this Contract shall constitute a full and final settlement of any and all claims arising out of or related to the change set forth herein, including claims for impact and delay costs.

The Director of Procurement will direct the Contractor to increase the penal sum of the existing Performance, Payment Bonds and Insurance or to obtain additional bonds on the basis of a $100,000.00 or greater value change order. The Contractor Shall: Provide written confirmation within one (1) week of request: from their bonding company/agent (attorney-in-fact) that the amounts of the Performance, Payment Bonds and Insurance have been adjusted to 100% of the new contract amount. NOTE: No Invoices for change order work shall be paid without approved supporting documentation.

Contractor _____
Designer _____
Project Manager _____
General Superintedent _____

Executive Director's Approval of Change Order No. X **ED-00X-20XX**

Contract
Number/Name:

Contractor:

This Change Order, in the amount of XXXXXXX, represents additional construction costs (labor, material, and equipment) for_____. This change brings the accumulated contract change order total to $XXXX, or XXX% of the original contract. The cumulative contract total is now $XXXXXXXXX.

Provide Details

Attachments: Board of Directors Contractor Fact Sheet, S&WB Cost Estimate, and Contractor's Proposals

Recommended by: _____
Kaitlin Tymrak, P.E.
Interim General Superintendent

Pursuant to the approval authority vested in the Executive Director by Resolution R-063-2021, I hereby approve Change Order X as indicated above.

_____
Randy E. Hayman
EXECUTIVE DIRECTOR
SEWERAGE AND WATER BOARD OF NEW ORLEANS

SECTION 01 29 00
PAYMENT PROCEDURES

PART 1 GENERAL

1.01 SUBMITTALS

A. Informational Submittals:
   1. Schedule of Values: Submit on Contractor's standard form.
   2. Schedule of Estimated Progress Payments:
      a. Submit baseline forecast within 7 days of Owner acceptance of Schedule of Values.
      b. Submit adjustments thereto with Application for Payment.
   3. Application for Payment.
   4. Final Application for Payment.

1.02 SCHEDULE OF VALUES

A. Prepare a separate Schedule of Values for each schedule of the Work under the Agreement. The Schedule of Values shall be based on the items in the Conformed Bid form utilizing the bid items as primary line items and breaking down the primary items into sub items as appropriate.

B. Upon request of Engineer, provide documentation to support the accuracy of the Schedule of Values.

C. Unit Price Work: Reflect unit price quantity and price breakdown from conformed Bid Form.

D. Lump Sum Work:
   1. Reflect specified alternates, as applicable.
   2. Break down by Division 2 through 49 with appropriate subdivision of each Specification.

E. An unbalanced or front-end loaded schedule will not be acceptable.

F. Summation of the complete Schedule of Values representing all the Work shall equal the Contract Price.

G. Submit Schedule of Values electronically in a spreadsheet format compatible with latest version of Excel. Include also three printed versions of the Schedule in the agreed to format(s).

1.03 SCHEDULE OF ESTIMATED PAYMENTS

A. Show estimated payment requests throughout Contract Times aggregating initial Contract Price.

B. Base estimated payments on initially acceptable baseline schedule. Adjust to reflect subsequent adjustments in progress schedule and Contract Price as reflected by modifications to the Contract Documents.

1.04 APPLICATION FOR PAYMENT

A. Transmittal Summary Form: Attach one Summary Form with each detailed Application for Payment for each schedule and include Request for Payment of Materials and Equipment on Hand as applicable. Execute certification by authorized officer of Contractor.

B. Use detailed Application for Payment Form acceptable to the Engineer.

C. Provide separate form for each schedule as applicable.

D. Include accepted Schedule of Values for each schedule or portion of lump sum Work and the unit price breakdown for the Work to be paid on a unit priced basis.

E. Include separate line item for each Change Order and Work Change Directive executed prior to date of submission. Provide further breakdown of such as requested by Engineer.

F. Preparation: Submit Application for Payment, including a Transmittal Summary Form and detailed Application for Payment Form(s) for each schedule as applicable, a listing of materials on hand for each schedule as applicable, and such supporting data as may be requested by Engineer.

1.05 MEASUREMENT—GENERAL

A. Weighing, measuring, and metering devices used to measure quantity of materials for Work shall be suitable for purpose intended and conform to tolerances and specifications as specified in National Institute of Standards and Technology, Handbook 44.

B. Whenever pay quantities of material are determined by weight, material shall be weighed on scales furnished by Contractor and certified accurate by state agency responsible. Weight or load slip shall be obtained from weigher and delivered to Owner's representative at point of delivery of material.

C. If material is shipped by rail, car weights shall be accepted provided that actual weight of material only shall be paid for and not minimum car weight used for assessing freight tariff and provided further that car weights shall not be acceptable for material to be passed through mixing plants.

D. Vehicles used to haul material being paid for by weight shall be weighed empty daily and at such additional times as required by Engineer. Each vehicle shall bear a plainly legible identification mark.

E. Where measurement of quantities depends on elevation of existing ground, elevations obtained during construction shall be compared with those shown on Drawings. Variations of 1 foot or less shall be ignored, and profiles shown on Drawings shall be used for determining quantities.

F. No payment will be processed if Contractor is not current with monthly Updated Progress Schedule and Narrative Progress Report submission.

1.06 PAYMENT

A. The following sum of items are subsidiary to the whole Work. The cost of these items shall be balanced throughout the separate pay items:

1. Contractor's supervision and Site meetings.
2. Administrative items.
3. Indirect support services and support including temporary facility and quality control, inclusive of construction management/coordination/ supervision and administration. Also includes the following:
    a. Administrative items detailed within Section 01 33 00, Submittal Procedures. This includes preparation, printing, processing, delivery of submittals, resubmittal and other work as required and necessary for approval of materials, equipment, means and methods as detailed within the Contract Documents from the Engineer and Owner.
4. Dewatering, excavation, trenching, backfilling, geotextile fabric and geogrid repair and/or replacement, and seeding, as required and as applicable per line item.
5. Construction photography as required by 01 31 13 Project Coordination.
6. Any expense incurred to prepare for severe weather, such as tie-towns or lowering the booms of cranes. These activities are not eligible for direct pay, reimbursement, or change in Contract Time or Price

B. Payment for all Lump Sum Work shown or specified in Contract Documents is included in the Contract Price. Payment will be based on milestone completion for each line item of the accepted Schedule of Values.

C. Payment for lump sum and unit price items covers all the labor, materials, and services necessary to furnish and install the items listed in Table 1.

Table 1: Payment Items

Reference Number	Description	QTY	Unit of Measure	Measurement and Payment Item Description	Reference Specification (Including but not limited to)
1	(A) Mobilization and Demobilization, (B) Prepare and Submit Project Schedules, and (C) Construction Layout	1	LS	(A) Preparatory work and operations, including those necessary for movement of personnel, equipment, supplies, and incidentals to the project site; the establishment of offices, buildings, and other facilities necessary for work on the project; the cost of bonds and any required insurance; licenses and permits; other preconstruction expenses necessary for start of the work, excluding the cost of construction materials; and coordination with the Owner's testing services. (B) Submittal and Approval of all project schedules including Project Milestone Schedule, Preliminary Progress Schedule, Detailed Progress Schedules, Submittal Schedule, Schedule of Values and Payment Schedule. (C) All labor, materials, equipment, and incidentals required to establish lines and grades, and locate underground obstructions, including any necessary exploratory excavation.	Commercial Terms and Conditions of the Contract Documents. 01 29 00 Payment Procedures 01 31 13 Project Coordination 01 32 00 Large Construction Progress Documentation 01 50 00 Temporary Facilities and Controls 01 57 13 Temporary Erosion and Sediment Control 01 71 23 Construction Layout Other applicable Contract Documents
2	Fuel Oil Forwarding Pump Skid Supply and Installation	1	LS	All labor, materials, equipment, incidentals, testing and commissioning costs required to supply the Fuel Oil Forwarding Pump Skid and install on the new steel platform in the existing bulk fuel tank containment area as shown in the Contract Documents.	All applicable Division 1 specifications 13 30 00 Staging Lifting Plan 23 13 13 33 Fuel Oil Forwarding Pump Skid 26 05 04 Electrical Requirements for Packaged Mechanical Equipment 26 05 26 Grounding and Bonding for Electrical Systems 40 90 40 I&C for Packaged Mechanical Equipment Other applicable Contract Documents

Table 1: Payment Items

Reference Number	Description	QTY	Unit of Measure	Measurement and Payment Item Description	Reference Specification (Including but not limited to)
3	Fuel Oil Return Pump Skid Supply and Installation	1	LS	All labor, materials, equipment, incidentals, testing and commissioning costs required to supply the Fuel Oil Return Pump Skid and install in the C7 basin on the existing fuel oil day tank foundation as shown in the Contract Documents.	All applicable Division 1 specifications 03 60 00 Structural and Equipment Grouting 13 30 00 Staging Lifting Plan 23 12 13 Fuel Oil Transfer Equipment 26 05 04 Electrical Requirements for Packaged Mechanical Equipment 26 05 26 Grounding and Bonding for Electrical Systems 40 90 40 I&C for Packaged Mechanical Equipment Other applicable Contract Documents
4	Supply and Installation of Steel Platform for Fuel Oil Forwarding Pump Skid	1	LS	All labor, materials, equipment, and incidentals required to supply and install the structural steel platform as shown in the Contract Documents, including but not limited to structural steel and anchorage, grating, handrails, and ladder.	All applicable Division 1 specifications 03 60 00 Structural and Equipment Grouting 05 05 19 Post-Installed Anchors 05 05 23 Welding 05 10 00 Erection of Structural and Miscellaneous Steel 05 12 00 Supply and Fabrication of Structural and Miscellaneous Steel 05 52 19 Steel Railings 05 53 00 Metal Gratings 09 90 01 Painting Protective Coatings Other applicable Contract Documents
5	Single Wall Pipe, Valves, Fittings, Coatings, Supports, Trenching, Sleeve (Under Roadway), Tie-Ins	1	LS	All labor, materials, equipment, incidentals, cleaning/flushing, testing, and inspection costs associated with complete supply and installation of all single wall pipe, valves, fittings, coatings, supports, pipe sleeving (under roadway), and tie-ins as shown in the Contract Documents.	All applicable Division 1 specifications 09 90 01 Painting Protective Coatings 15 34 42 Underground Piping 31 20 00 Earthwork 31 23 16 Excavation 31 23 23 Fill and Backfill 31 41 00 Shoring 40 50 20 Above Ground Power Plant Piping 40 55 00 Power Plant Valves 48 58 68 Welding Power Plant Piping Other applicable Contract Documents

Table 1: Payment Items

Reference Number	Description	QTY	Unit of Measure	Measurement and Payment Item Description	Reference Specification (Including but not limited to)
6	Double Wall Pipe, Fittings, Coatings, Supports, Trenching, Tie-Ins	1	LS	All labor, materials, equipment, incidentals, cleaning/flushing, testing, and inspection costs associated with complete supply and installation of all double wall pipe, fittings, coatings, supports, and tie-ins as shown in the Contract Documents.	All applicable Division 1 specifications 09 90 01 Painting Protective Coatings 15 34 42 Underground Piping 31 20 00 Earthwork 31 23 16 Excavation 31 23 23 Fill and Backfill 31 41 00 Shoring 40 50 20 Above Ground Power Plant Piping 40 55 00 Power Plant Valves 48 58 68 Welding Power Plant Piping Other applicable Contract Documents
7	Double Wall Pipe Leak Detection System and Integration	1	LS	All labor, materials, equipment, incidentals, testing, and commissioning costs associated with complete supply and installation of the leak detection system for all double wall pipe as shown in the Contract Documents, including electrical and controls connections and integration to the existing leak detection system.	All applicable Division 1 specifications 25 05 11 Cybersecurity for Facility Related Control Systems 26 05 19 Low-Voltage Electrical Power Conductors and Cables 27 15 13 Communications Copper Horizontal Cabling 27 15 23 Communications Optical Fiber Horizontal Cabling 40 94 23 Balance of Plant Control System 40 94 24 Human Machine Interface 40 94 25 Data Exchange Interface 40 95 33 Process Control Networks Other applicable Contract Documents
8	Cathodic Protection	1	LS	All labor, materials, equipment, incidentals, testing, and commissioning costs associated with complete design, supply and installation of the cathodic protection system for all single and double wall pipe as shown in the Contract Documents.	All applicable Division 1 specifications 48 50 90 Cathodic Protection Other applicable Contract Documents

Table 1: Payment Items

Reference Number	Description	QTY	Unit of Measure	Measurement and Payment Item Description	Reference Specification (Including but not limited to)
9	Electrical Installation	1	LS	All labor, materials, equipment, incidentals, testing, and commissioning costs associated with complete supply and installation of electrical systems as shown in the Contract Documents, including but not limited to (2) pump skids and lighting at the new structural steel platform.	All applicable Division 1 specifications 26 05 19 Low-Voltage Electrical Power Conductors and Cables 26 05 26 Grounding and Bonding for Electrical Systems 26 05 29 Hangers and Supports for Electrical Systems 26 05 33 Raceways and Boxes for Electrical Systems 26 05 53 Identifications for Electrical Systems 26 50 00 Lighting Other applicable Contract Documents
10	Controls Installation	1	LS	All labor, materials, equipment, incidentals, testing, and commissioning costs associated with complete supply and installation of controls systems as shown in the Contract Documents, including but not limited to (2) pump skids.	All applicable Division 1 specifications 25 05 11 Cybersecurity for Facility Related Control Systems 27 15 13 Communications Copper Horizontal Cabling 27 15 23 Communications Optical Fiber Horizontal Cabling 40 90 00 I&C General Requirements 40 90 20 Instrument Installation 40 91 00 I&C Components 40 92 13 Process Control Valves and Regulators Other applicable Contract Documents
11	Controls Integration	1	LS	All labor, materials, equipment, incidentals, testing, and commissioning costs associated with complete integration of controls systems to existing plant infrastructure as shown in the Contract Documents, including but not limited to (2) pump skids.	All applicable Division 1 specifications 25 05 11 Cybersecurity for Facility Related Control Systems 40 94 23 Balance of Plant Control System 40 94 24 Human Machine Interface 40 94 25 Data Exchange Interface 40 95 33 Process Control Networks Other applicable Contract Documents

Table 1: Payment Items

Reference Number	Description	QTY	Unit of Measure	Measurement and Payment Item Description	Reference Specification (Including but not limited to)
Units of Measure					
AC	Acre—Field Measure by Engineer				
CY	Cubic Yard—Field Measure by Engineer within limits specified or shown				
EA	Each—Field Count by Engineer				
GAL	Gallon—Field Measure by Engineer				
HR	Hour				
LB	Pound(s)—Weight Measure by Scale				
LF	Linear Foot—Field Measure by Engineer				
LS	Lump Sum				
MFBM	Thousand Foot Board Measure-Delivery Invoice				
SF	Square Foot				
SY	Square Yard				
TON	Ton—Weight Measure by Scale (2,000 pounds)				

1.07 NONPAYMENT FOR REJECTED OR UNUSED PRODUCTS

A. Payment will not be made for following:

1. Loading, hauling, and disposing of rejected material.
2. Quantities of material wasted or disposed of in manner not called for under Contract Documents.
3. Rejected loads of material, including material rejected after it has been placed by reason of failure of Contractor to conform to provisions of Contract Documents.
4. Material not unloaded from transporting vehicle.
5. Defective Work not accepted by Owner.
6. Material remaining on hand after completion of Work.
7. Payment will not be made for expense incurred to prepare for severe weather, such as tie-towns or lowering the booms of cranes, is not eligible for direct pay, reimbursement, or change in Contract Time or Price.

1.08 PARTIAL PAYMENT FOR STORED MATERIALS AND EQUIPMENT

A. Partial Payment: No partial payments will be made for materials and equipment delivered or stored unless Shop Drawings and storage of said materials/equipment is in accordance with manufacturer's instructions and are acceptable to Engineer.

B. Contractor shall provide with the request for payment confirming documentation that the cited material or equipment has been paid for by the Contractor. Failure to provide confirming documentation will result in denial of the request for payment. Payment for any approved stored materials or equipment shall not exceed 90 percent of the purchased value which shall be validated by a paid invoice. Retainage will be withheld on the approved amount.

C. Final Payment: Will be made only for products incorporated in Work; remaining products, for which partial payments have been made, shall revert to Contractor unless otherwise agreed, and partial payments made for those items will be deducted from final payment.

1.09 PARTIAL PAYMENT FOR UNDELIVERED, PROJECT-SPECIFIC MANUFACTURED OR FABRICATED EQUIPMENT

A. Notwithstanding above provisions, partial payments for undelivered (not yet delivered to Site or not stored in the vicinity of Site) products specifically manufactured for this Project, excluding off the shelf or catalog items, will be made when all following conditions exist:

1. Partial payment request is supported by written acknowledgment from Suppliers that invoice requirements have been met.
2. Equipment is adequately insured, maintained, stored, and protected by appropriate security measures.
3. Each equipment item is clearly marked and segregated from other items to permit inventory and accountability.

4. Authorization has been provided for access to storage Site for Engineer and Owner.
5. Equipment meets applicable Specifications of these Contract Documents.
6. Engineer concurs that affected equipment was specifically manufactured for this Project.

B. Failure of Contractor to continue compliance with above requirements shall give cause for Owner to withhold payments made for such equipment from future partial payments.

PART 2 PRODUCTS (NOT USED)

PART 3 EXECUTION (NOT USED)

END OF SECTION

INTENTIONALLY LEFT BLANK

SECTION 01 31 13
PROJECT COORDINATION

PART 1 GENERAL

1.01 SUBMITTALS

A. Informational:

1. Work Sequencing Plan: Submit detailed plan including all equipment, materials, labor necessary to complete installation of all new equipment and components.
2. Statement of Qualification (SOQ) for land surveyor or Professional Engineer.

1.02 RELATED WORK AT SITE

A. General:

1. Other work that is either directly or indirectly related to scheduled performance of the Work under these Contract Documents, listed henceforth, is anticipated to be performed at Site by others.
   a. C1420 Phase 1 Installation and Commissioning.
   b. C1429 Construction of Operations Center.
   c. C1430 Switchgear Procurement.
   d. C1432 Utility Tie-Ins Outside of C7 Basin.
   e. C1434 Electrical Installation and Final Commissioning.
   f. C1435 Cable Supply and Management.
   g. C1459 Claiborne Stormwater Outfall Tie-In.
2. Coordinate the Work of these Contract Documents with work of other contracts as specified in General Conditions.
3. Include sequencing constraints specified herein as a part of Progress Schedule.

B. Agency and Contact Person(s): A list of contact names/numbers shall be provided by the Owner as part of the preconstruction conference. Contractor shall be responsible for coordination of all work with the applicable agency in accordance with the requirements to complete the work detailed within these Documents.

1.03 OWNER-FURNISHED PRODUCTS

A. As noted in Project specific Section 01 11 01, Project Summary of Work.

1.04 UTILITY NOTIFICATION AND COORDINATION

A. Coordinate the Work with various utilities within Project limits. Notify applicable utilities prior to commencing Work, if damage occurs, or if conflicts or emergencies arise during the Work.

B. Project work at the SWBNO Carrollton Water Purification Plant requires the Contractor to take abundant precaution to avoid any contamination of the water

treatment process on site. Construction debris is not allowed to enter the facility water basins at any time. Contamination of the water supply shall be categorized as damages as defined in the General Conditions.

1.05 WORK SEQUENCING/CONSTRAINTS

A. The C1444 Progress Schedule prepared by the Contractor shall as a minimum include the following Project Milestones, which may affect the Sequence of Work:

1. Major equipment and material submittal dates.
2. Major equipment and material order release dates.
3. Major equipment and material delivery dates.
4. Piping installation completion by zone (zones as defined by Contractor).
5. Structural steel erection complete.
6. Piping tie-in installation complete.
7. Electrical tie-in installation complete.
8. Controls installation complete.
9. Controls integration complete.
10. Mechanical Completion.
11. Substantial Completion (system startup and commissioning complete).

B. The C1444 Progress Schedule prepared by the Contractor shall as a minimum include a detailed breakdown of the following activities to accommodate coordination with other contractors on site:

1. Construction activities associated with equipment and material deliveries.
2. Crane staging, if required.
3. Equipment staging.
4. Potential utility outage requests.
5. Construction activities associated with excavation and trenching. Deeper utilities shall be constructed first.
6. Construction activities associated with backfill of excavated areas.
7. Construction activities associated with tie-ins to existing facilities.

C. The information provided herein shall not be relied upon by the Contractor as fully complete, comprehensive, or fully detailed. Contractor shall make their own assessment and determination of requirements that affect or may affect the progress, sequence, or cost of the Work.

1.06 FACILITY OPERATIONS

A. Continuous operation of Owner's facilities is of critical importance. Schedule and conduct activities to enable existing facilities to operate continuously, unless otherwise specified. Contractor shall be responsible for any costs/labor associated with repair and restart of any facilities damaged by Contractor.

B. Perform Work continuously during critical connections and changeovers, and as required to prevent interruption of Owner's operations.

C. When necessary, plan, design, and provide various temporary services, utilities, connections, temporary piping and heating, access, and similar items to maintain continuous operations of Owner's facility.

D. Do not close lines, open or close valves, or take other action which would affect the operation of existing systems, except as specifically required by the Contract Documents and after authorization by Owner and Engineer. Such authorization shall be considered within 48 hours after receipt of Contractor's written request.

E. Construct Work to allow for Owner's continuous occupancy and for uninterrupted operation during construction. Contractor shall be required to protect existing underground utilities during construction. Contractor shall request and receive feeder outages prior to working in the vicinity of or when the Work crosses existing electrical feeders.

1.07 MAINTENANCE OF PLANT OPERATIONS (MOPO)

A. To maintain the high reliability of the water plant and power plant, outages of major processes shall be carefully scheduled. Where applicable, redundant equipment shall be operated while the other equipment is out of service. Advance planning and approval by the Owner based on current plant conditions and predicted weather forecasts shall be required.

1. The Contractor shall coordinate the outages based on the Contractor's detailed execution planning and in coordination with the Owner.

2. Where applicable, when a major piece of equipment is out of service then all associated work for piping, controls and instrumentation shall be scheduled simultaneously. This optimizes the outage work and avoids multiple small outages.

1.08 CONSTRUCTION SEQUENCING

A. The construction sequence information here is provided for general guidance only. It is consistent with the MOPO section and the Project Schedule. Contractor shall develop the detailed construction schedule, sequence planning, and submit separately.

B. Individual components and equipment in a system shall be installed and completed in a sequence that shall permit systematic checkout and operation of each component before initial operation of the system.

C. Process or Facility Shutdown:

1. Provide 14 days advance written request for approval of need to shut down a process or facility to Owner. Submission of request does not constitute approval. Contractor shall allow 7 days decision time for Owner, and adequate time to coordinate the effort following the decision.
2. Power outages shall be considered upon 48 hours written request to Owner. Describe the reason, anticipated length of time, and areas affected by the outage. In the event operating systems shall be kept in service, provide temporary provisions for continuous power supply to critical facility components.
3. Denial of a feeder outage shall not be grounds for a delay claim. Contractor shall plan accordingly its work near existing underground utilities and expect a large amount of coordination with the Owner.

D. Install and maintain bypass facilities and/or temporary connections required to keep Owner's operations online. Sequences other than those specified shall be considered upon written request to Owner and Engineer, provided they afford equivalent continuity of operations.

E. Do not proceed with Work affecting a facility's operation without obtaining Owner's advance approval of the need for and duration of such Work.

F. Relocation of Existing Facilities:

1. During construction, relocations of Work may be necessary.
2. Provide complete relocation of existing structures and Underground Facilities, including piping, utilities, equipment, structures, electrical conduit wiring, electrical duct bank, and other necessary items.
3. Use only new materials for relocated facility. Match materials of existing facility, unless otherwise shown or specified.
4. Perform relocations to minimize downtime of existing facilities.
5. Install new portions of existing facilities in their relocated position prior to removal of existing facilities, unless otherwise accepted by Engineer.

1.09 ADJACENT FACILITIES AND PROPERTIES

A. Examination:

1. After Effective Date of the Agreement and before Work at Site is started, Contractor, Engineer, and affected property owners and utility owners shall make a thorough examination of pre-existing conditions including existing buildings, structures, and other improvements in vicinity of Work, as applicable, which could be damaged by construction operations.
2. Periodic reexamination shall be jointly performed to include, but not limited to, cracks in structures, settlement, leakage, and similar conditions.

B. Documentation:

1. Record and submit documentation of observations made on examination inspections in accordance with Article Construction Photographs and Article Audio-Video Recordings. Upon receipt, Engineer will review, sign, and return one record copy of documentation to Contractor to be kept on file in field office.
2. Such documentation shall be used as indisputable evidence in ascertaining whether and to what extent damage occurred as a result of Contractor's operations, and is for the protection of adjacent property owners, Contractor, and Owner.

1.10 CONSTRUCTION PHOTOGRAPHS

A. General:

1. Photographically document all phases of the Project including preconstruction, construction progress, and post-construction.
2. Engineer shall have right to select subject matter and vantage point from which photographs are to be taken.
3. Digital Images: No post-session electronic editing of images is allowed. Stored image shall be actual image as captured without cropping or other edits.

B. Preconstruction and Post-Construction:

1. After Effective Date of the Agreement and before Work at Site is started, and again upon issuance of Substantial Completion, take a minimum of 100 photographs of Site and property adjacent to perimeter of Site.
2. Particular emphasis shall be directed to structures both inside and outside the Site.
3. Format: 2176 pixels by 3264 pixels and 24-bit, millions of color.

C. Construction Progress Photos: Photographically demonstrate progress of construction, showing every aspect of Site and adjacent properties as well as interior and exterior of new or impacted structures.

D. Documentation:
   1. Digital Images:
      a. Electronic image shall have date taken embedded into image.
      b. Archive using a commercially available photo management system that provides listing of photographs including date, keyword description, and direction of photograph.
      c. Label archived media with Project and Owner's name, and month and year images were produced.

1.11 AUDIO-VIDEO RECORDINGS

A. Prior to beginning the Work on Site or of a particular area of the Work, and again within 10 days following date of Substantial Completion, videograph Site and property adjacent to Site.
B. In the case of preconstruction recording, no work shall begin in the area prior to Engineer's review and approval of content and quality of video for that area.
C. Particular emphasis shall be directed to physical condition of existing vegetation, structures, and pavements within areas where excavation shall be performed and areas adjacent to and within the right-of-way or easement, and on Contractor storage and staging areas.
D. Engineer shall have right to select subject matter and vantage point from which videos are to be taken.
E. Video Format and Quality:
   1. DVD format, with sound.
   2. Video:
      a. Produce bright, sharp, and clear images with accurate colors, free of distortion and other forms of picture imperfections.
      b. Electronically, and accurately display the month, day, year, and time of day of the recording.
   3. Audio:
      a. Audio documentation shall be done clearly, precisely, and at a moderate pace.
      b. Indicate date, project name, and a brief description of the location of recording, including:
         1) Facility name.
         2) Street names or easements.
         3) Addresses of private property.
         4) Direction of coverage, including engineering stationing, if applicable.
F. Documentation:
   1. DVD Label:
      a. DVD number (numbered sequentially, beginning with 001).
      b. Project name.

c. Name of street(s) or easement(s) included.

d. Date and time of coverage.

2. Project Video Log: Maintain an ongoing log that incorporates above noted label information for DVDs on Project.

1.12 REFERENCE POINTS AND SURVEYS

A. Owner's Responsibilities:

1. Provide benchmarks convenient to Work.
2. Establish horizontal reference points or coordinate system with bench marks and reference points for Contractor's use as necessary to lay out Work.

B. Contractor's Responsibilities:

1. Provide additional survey and layout required to layout the Work.
2. Notify Engineer at least 3 working days in advance of time when grade and line to be provided by Owner will be needed.
3. Check and establish exact location of existing facilities prior to construction of new facilities and any connections thereto.
4. In the event of discrepancy in data or staking provided by Owner, request clarification before proceeding with Work.
5. Retain professional land surveyor or civil engineer licensed in state of Louisiana who shall perform or supervise engineering surveying necessary for additional construction staking and layout.
6. Maintain complete accurate log of survey work as it progresses as a Record Document.
7. On request of Engineer, submit documentation.

PART 2 PRODUCTS (NOT USED)

PART 3 EXECUTION

3.01 CUTTING, FITTING, AND PATCHING

A. Cut, fit, adjust, or patch Work and work of others, including excavation and backfill as required, to make Work complete.

B. Obtain prior written authorization of Engineer before commencing Work to cut or otherwise alter:

1. Structural or reinforcing steel, structural column or beam, elevated slab, trusses, or other structural member.
2. Weather-resistant or moisture-resistant elements.
3. Efficiency, maintenance, or safety of element.
4. Work of others.

C. Refinish surfaces to provide an even finish.
   1. Refinish continuous surfaces to nearest intersection.
   2. Refinish entire assemblies.
   3. Finish restored surfaces to such planes, shapes, and textures that no transition between existing work and the Work is evident in finished surfaces.

D. Restore existing work, Underground Facilities, and surfaces that are to remain in completed Work including concrete-embedded piping, conduit, and other utilities as specified and as shown on the Drawings.

E. Make restorations with new materials and appropriate methods as specified for new Work of similar nature; if not specified, use recommended practice of manufacturer or appropriate trade association.

F. Fit Work airtight to pipes, sleeves, ducts, conduit, and other penetrations through surfaces and fill voids.

G. Remove specimens of installed Work for testing when requested by Owner or Engineer.

3.02 CONSTRUCTION EXECUTION

A. Any hot work – welding, grinding, cutting, etc. – shall be coordinated with the Owner prior to start of work. Proper warning signs, barricades, drop curtains and other appropriate safety measures shall be taken to protect all personnel and equipment in the work area.

B. Contractor's detailed schedule shall show placement of orders, receipt of drawings, approval of drawings, release to fabrication and fabrication and delivery to Site in detail for each major engineered equipment item with suitable adjustment for Contractor's execution plan.

C. Prior to any outage, all materials, equipment, utilities, and construction tools shall be staged on-site and ready for installation during the outage. Outages shall not be extended due to lack of preparation by Contractor.

D. Contractor shall coordinate with the Owner for Lock-Out / Tag-Out (LOTO) of equipment. The Contractor shall follow the Owner's LOTO procedures. The Owner will establish details of the LOTO procedures. All notifications of status and requests for clearance or operation shall be made to Owner.

E. The Owner will furnish limited operating personnel during commissioning, startup and testing. Contractor shall request and schedule with the Owner a minimum of 5 days in advance of the need for operating personnel. The Owner will be the only party authorized to operate permanent plant equipment.

F. It is the Contractor's responsibility to protect all equipment from damage and debris during surface preparation. In areas of buildings and machinery that the Contractor and Engineer agree can be damaged by blasting operations, power tool cleaning shall be used instead. If blasting occurs it is absolutely unacceptable to allow any damage to any equipment that is vital to the operations of the Sewerage and Water Board.

3.03 PROJECT SPECIFIC CONSIDERATIONS

A. General SWBNO site conditions to observe with the 1444 contract:

1. All Contractors shall be subject to security protocol while on site:
   a. Personnel shall be registered with security.
   b. All personnel enter through the security gates of the plant.
2. All work shall be coordinated with SWBNO plant activities to minimize plant process impact and outage.
3. If needed, offsite parking and transportation to and from the plant shall be the responsibility of the Contractor.
4. Only construction vehicles are allowed in the plant with the permission of the SWBNO.
5. Areas are limited for Contractor's temporary facilities and material/equipment laydown. Contractor shall propose areas for such use, for review and approval by the Owner.
6. Power for office and construction, internet, phone, sanitary, water services is the Contractor's responsibility.
7. It is the Contractor's responsibility to secure offsite facilities for parking and material storage. Transportation to and from storage site and the plant is the Contractor's responsibility.
8. In the event of a SWBNO process emergency the Contractor shall stop work and relinquish the area in question as directed by SWBNO.
9. All cranes and point loading equipment are required to be matted within the plant to meet the ground loading limitations as specified. Cranes shall be capable of being boomed down on short notice in the event of a storm.

END OF SECTION

INTENTIONALLY LEFT BLANK

SECTION 01 31 19
PROJECT MEETINGS

PART 1 GENERAL

1.01 GENERAL

A. Engineer will schedule meetings throughout progress of the Work, prepare meeting agenda with regular participant input and distribute with written notice of each meeting, preside at meetings, record minutes to include significant proceedings and decisions, and reproduce and distribute copies of minutes within 5 days after each meeting to participants and parties affected by meeting decisions.

1.02 PRECONSTRUCTION CONFERENCE

A. Contractor shall be prepared to present and discuss the following subjects, as a minimum:

1. Required schedules.
2. Status of Bonds and insurance.
3. Sequencing of critical path work items.
4. Progress payment procedures.
5. Project changes and clarification procedures.
6. Use of Site, access, office and storage areas, security and temporary facilities.
7. Major product delivery and priorities.
8. Contractor’s site-specific safety plan and safety representative.
9. DBE requirements and Contractor’s plan to comply.

B. Attendees shall include:

1. Owner’s representatives.
2. Contractor’s office representative.
3. Contractor’s resident superintendent.
4. Contractor's safety representative.
5. Contractor’s quality control representative.
6. Subcontractors’ representatives whom Contractor may desire, or Engineer may request to attend.
7. Engineer’s representatives.
8. Others as appropriate.

1.03 PRELIMINARY SCHEDULES REVIEW MEETING

A. As set forth in General Conditions and Section 01 32 00, Large Construction Progress Documentation, if required by the Scope of Work.

1.04 PROGRESS MEETINGS

A. Engineer will schedule and facilitate regular progress meetings, conducted weekly to review the Work progress, Progress Schedule, Schedule of Submittals, Application for Payment, contract modifications, and other matters needing discussion and resolution.

B. Attendees shall include:

1. Owner’s representative(s).
2. Contractor, Subcontractors, and Suppliers, as appropriate.
3. Engineer/Designer representative(s).
4. Others as appropriate.

C. The minimum agenda for progress meetings shall consist of the following:

1. Review any safety related items from the past week and/or activities requiring specific attention in the coming week(s).
2. Review and approve notes of previous meetings.
3. Review work progress since last meeting.
4. Review three-week look-ahead schedule, to be issued to the Engineer 24-hours before the progress meeting.
5. Note field observations, problems and decisions.
6. Identify problems that currently, can, or shall impede planned progress.
7. Review off site fabrication problems.
8. Review Contractor's revision(s) to the construction schedule as outlined in the Supplementary Conditions.
9. Review Contractor's corrective measures and procedures to regain plan schedule (as applicable).
10. Review submittal schedule; coordinate expediting actions as appropriate to maintain schedule.
11. Review pertinent quality and work standards.
12. Review Owner-proposed and/or Contractor-proposed changes for their effect on the construction schedule and completion date.
13. Schedule any other meetings and define attendees.
14. Complete other current business.

D. The meeting shall also recognize issues and questions as addressed by attendees. Those questions not resolved shall be assigned an action party for follow-up, with a defined response date.

1.05 QUALITY CONTROL MEETINGS

A. In accordance with Section 01 45 16.13, Contractor Quality Control, if required by the Scope of Work.

B. Scheduled by Engineer on regular basis and as necessary to review test and inspection reports, and other matters relating to quality control of the Work. At a minimum these meetings shall be held prior to initiating work in a specific

trade, discipline, or facet of the Work (essentially, this equates to the Work addressed by each section or group of closely related sections within the Contract Specifications).

C. As deemed necessary during the Work, the Engineer will schedule meetings to review the Contract Documents, the Contractor's quality control plan and procedures, progress reporting procedures, and measurement and payment procedures for that specific trade, discipline, or facet of the Work, and other matters relating to quality control of the Work.

D. Attendees shall include:

1. Contractor's Quality Control Manager.
2. Contractor's designated quality control representative(s).
3. Subcontractors and Suppliers, as necessary.
4. Owner's Representative.
5. Owner's Quality Assurance Representatives.
6. Engineer's representatives, as appropriate.

1.06 SHOP DRAWING/SUBMITTAL COORDINATION MEETING

A. The Engineer will schedule a Shop Drawing coordination meeting shortly after the Preconstruction Conference to review the submittal register to ensure all submittals are properly identified; discuss the submittal process in greater detail to effectively confirm everyone's understanding of the process and its purpose; identify critical submittals and what associated actions are necessary to facilitate their processing; discuss the process for identifying proposed substitutions; identify any concerns associated with the specified products; and collaborate on actions that can help overcome concerns cited. Attendees to the meeting shall include the design engineer, the Contractor's Project Manager, the Contractor's Project Engineer, the Quality Control Manager, staff as deemed appropriate by the Contractor's Project Manager, key vendor representatives, key sub-contractor representatives, and appropriate Engineer's staff.

1.07 PREINSTALLATION MEETINGS

A. When required in individual Specification sections, convene at Site prior to commencing the Work of that section.

B. Require attendance of entities directly affecting, or affected by, the Work of that section.

C. Notify Engineer 14 days in advance of meeting date.

D. Provide suggested agenda to Engineer to include reviewing conditions of installation, preparation and installation or application procedures, and coordination with related Work and work of others.

1.08 DEMONSTRATION TESTING MEETINGS

A. Schedule and attend demonstration testing meetings prior to final completion.

B. Agenda items shall include, but not be limited to, coordination needed between various parties in attendance, and potential problems associated with demonstration of installed equipment and materials.

C. Attendees shall include:

1. Contractor.
2. Contractor's Quality Control Manager.
3. Subcontractors and equipment manufacturer's representatives whom Contractor deems to be directly involved in facility startup.
4. Engineer's representatives.
5. Owner's operations personnel.
6. Others as required by Contract Documents or as deemed necessary by Contractor.

1.09 OTHER MEETINGS

A. In accordance with Contract Documents and as may be required by Owner or Engineer.

PART 2 PRODUCTS (NOT USED)

PART 3 EXECUTION (NOT USED)

END OF SECTION

SECTION 01 32 00
LARGE CONSTRUCTION PROGRESS DOCUMENTATION

PART 1 GENERAL

1.01 SUBMITTALS

A. Informational Submittals:

1. Schedule software: Submit with Preliminary Progress Schedule software application proposed for use in developing and maintaining the progress schedule. Acceptable software is Primavera P6 (current version), or equivalent. A proposed equivalent must be supported by detailed documentation verifying capability of the proposed software. Should the Engineer not have the proposed software for evaluation and use purposes, the Contractor shall provide appropriate copies and licenses necessary for the Engineer to effectively evaluate and implement the software. Said copies/licenses shall be returned to the Contractor upon completion of the Work.
2. Preliminary Progress Schedule: Submit within 10 days after the Effective date of the Agreement.
3. Detailed Progress Schedule:
    a. Submit initial Detailed Progress Schedule within 10 days after Notice to Proceed.
    b. Submit an Updated Progress Schedule at each update, in accordance with Article Detailed Progress Schedule.
4. Submit with Each Progress Schedule Submission:
    a. Contractor’s certification that Progress Schedule submission is actual schedule being utilized for execution of the Work.
    b. Progress Schedule: Electronic copy.
    c. Narrative Progress Report: Electronic Copy.
5. Prior to monthly payment, submit a monthly Updated Progress Schedule.
6. Prior to final payment, submit a final Updated Progress Schedule.

1.02 PRELIMINARY PROGRESS SCHEDULE

A. Project work on Site shall include multiple prime contracts with each contract awarded separately. Construction Coordinator, as designated in the Supplementary Conditions, shall be responsible for developing and maintaining a master Progress Schedule using individual Progress Schedules prepared by each Contractor as submitted to Engineer under this section.

B. In addition to basic requirements outlined in General Conditions, show a detailed schedule, beginning with Notice to Proceed, for minimum duration of 120 days, and a summary of balance of Project through Final Completion.

C. Show activities including, but not limited to the following:

1. Notice to Proceed.
2. Permits, if required: Division 01, General Requirements.
3. Submittals, with review time. Contractor may use Schedule of Submittals specified in Section 01 33 00, Submittal Procedures.
4. Early procurement activities for long lead equipment and materials.
5. Preparatory and Initial Phase meetings.
6. Environmental controls installation.
7. Initial Site work.
8. Earthwork.
9. Specified Work sequences and constraints.
10. Contract Milestone and Completion Dates.
11. Owner-furnished products delivery dates or ranges of dates.
12. Major structural, mechanical, equipment, electrical, architectural, and instrumentation and control Work.
13. System flushing and testing summary.
14. Project close-out summary.
15. Demobilization summary.

D. Update Preliminary Progress Schedule monthly as part of progress payment process. Failure to do so may result in the Owner withholding all or part of the monthly progress payment until the Preliminary Progress Schedule is updated in a manner acceptable to Engineer.

E. Format: In accordance with Article Progress Schedule—Critical Path Network.

1.03 DETAILED PROGRESS SCHEDULE

A. In addition to requirements of General Conditions, submit Detailed Progress Schedule beginning with Notice to Proceed and continuing through Final Completion.

B. Show the duration and sequences of activities required for complete performance of the Work reflecting means and methods chosen by Contractor.

C. When accepted by Engineer, the Detailed Progress Schedule shall incorporate actual Work completed from the Preliminary Progress Schedule and become the Baseline Schedule. Subsequent revisions shall be considered as Updated Progress Schedules.

D. Format: In accordance with Article Progress Schedule—Critical Path Network.

E. Update monthly to reflect actual progress and occurrences to date, including delays.

1.04 PROGRESS SCHEDULE—CRITICAL PATH NETWORK

A. General: Comprehensive computer-generated schedule using CPM, generally as outlined in Associated General Contractors of America (AGC) 580, "Construction Project Planning and Scheduling Guidelines." If a conflict occurs between the AGC publication and this Specification, this Specification shall govern.

B. Contents:

1. Schedule shall begin with the date of Notice to Proceed and conclude with the date of Final Completion.
2. Identify Work calendar basis using days as a unit of measure.
3. Show complete interdependence and sequence of Work and Project related activities reasonably required to complete the Work.
4. Identify the Work of separate stages and other logically grouped activities and clearly identify critical path of activities.
5. Reflect sequences of the Work, restraints, delivery windows, review times, Contract Times and Project Milestones set forth in the Agreement and Section 01 31 13, Project Coordination.
6. Include as applicable, at a minimum:
    a. Obtaining permits. See Division 01, General Requirements.
    b. Submittals for early product procurement, and long lead time items.
    c. Mobilization and other preliminary activities.
    d. Initial Site work.
    e. Specified Work sequences, constraints, and Milestones, including Substantial Completion date(s) Subcontract Work.
    f. Major equipment design, fabrication, factory testing, and delivery dates.
    g. Delivery dates for Owner-furnished products, if any, as specified in Section 01 11 01, Project Summary of Work.
    h. Environmental controls implementation.
    i. Sitework.
    j. Concrete Work.
    k. Structural steel Work.
    l. Equipment Work.
    m. Mechanical Work.
    n. Electrical Work.
    o. Controls Work.
    p. Interfaces with Owner-furnished equipment.
    q. Other important Work for each major facility.
    r. System flush and test activities.
    s. System commissioning activities.

t. Project closeout and cleanup.

u. Demobilization.

7. No activity duration, exclusive of those for Submittals review and product fabrication/delivery, shall be less than 1 calendar day or more than 14 calendar days, unless otherwise approved by the Engineer.

8. Activity duration for Submittal review shall not be less than review time specified unless clearly identified and prior written acceptance has been obtained from Engineer.

C. Network Graphical Display:

1. Plot or print on paper not greater than 30 inches by 42 inches or smaller than 22 inches by 34 inches, unless otherwise approved.

2. Title Block: Show name of Project, Owner, date submitted, revision or update number, and the name of the scheduler. Updated schedules shall indicate data date.

3. Identify horizontally across top of schedule the time frame by year, month, and day.

4. Identify each activity with a unique number and a brief description of the Work associated with that activity.

5. Indicate the critical path.

6. Show, at a minimum, the controlling relationships between activities.

7. Plot activities on a time-scaled basis, with the length of each activity proportional to the current estimate of the duration.

8. Plot activities on an early start basis unless otherwise requested by Engineer.

9. Provide a legend to describe standard and special symbols used.

D. Reports: Four reports shall be submitted with each monthly update. These reports are as follows:

1. Standard Schedule Report:

a. On 8-1/2-inch by 11-inch white paper, unless otherwise approved.

b. List information for each activity in tabular format, including at a minimum:

1) Activity Identification Number.

2) Activity Description.

3) Original Duration.

4) Remaining Duration.

5) Early Start Date (Actual start on Updated Progress Schedules).

6) Early Finish Date (Actual finish on Updated Progress Schedules).

7) Late Start Date.

8) Late Finish Date.

9) Total Float.

c. Sort reports, in ascending order, as listed below: Activity number.

2. Early Start Report:

a. On 8-1/2-inch by 11-inch white paper, unless otherwise approved.

b. List information for each activity in tabular format, with the same content and in the same manner as for the Standard Schedule Report.

c. Sort reports in ascending order, by early start. Common early start dates shall be sub-organized by activity identification number.

3. Predecessor-Successor Report:

a. On 8-1/2-inch by 11-inch white paper, unless otherwise approved.

b. This is typically a standard report within schedule software. Standard content of the report includes predecessor analysis, activity code line, and successor analysis. Skip a line only after the successor analysis. The report shall be organized by activity identification number (ascending).

4. Critical Path Report:

a. On 8-1/2-inch by 11-inch white paper, unless otherwise approved.

b. List information for each activity in tabular format, with the same content as for the Standard Schedule Report.

c. Selected activities shall be those activities with five or less days of total float.

d. Sort reports by total float, in ascending order, starting with 0 days total float. Common total float activities shall be sub-organized by early start date.

1.05 PROGRESS OF THE WORK

A. Updated Progress Schedule shall reflect:

1. Progress of Work to within 5 working days prior to submission.
2. Approved changes in Work scope and activities modified since submission.
3. Delays in Submittals or resubmittals, deliveries, or Work.
4. Adjusted or modified sequences of Work.
5. Other identifiable changes.
6. Revised projections of progress and completion.
7. Report of changed logic.

B. Produce detailed sub schedules during Project, upon request of Owner or Engineer, to further define critical portions of the Work such as facility shutdowns.

C. Weekly Progress Meetings include an agenda item for a detailed 3-week look-ahead schedule of the work that shall address the upcoming 3 weeks and the past week of history. This schedule shall be included with the meeting agenda and shall provide expanded details of the work forecasted over the period. This update shall feature a sub-set of the Current Schedule to highlight the status of those activities that are either currently active as of the update, that shall start within the upcoming 3 weeks or that were completed in the past week, including submittal delivery to the Construction Manager, all meetings scheduled or planned, special inspections, special tests (routine testing shall be assumed to occur within the corresponding activity), major equipment deliveries, any operational shutdowns/outages, interconnections to existing utilities. The weekly progress update shall be made available to the Construction Manager at least 24 hours prior to the weekly progress meeting. At each meeting, the Contractor shall demonstrate to the satisfaction of the Construction Manager that they have the resources required to perform the portion of the Works included in the construction package as specified; and that the Contractor's health, safety and environment, and quality control plans are adequate for the phases of work to be commenced or in progress. All expanded activities within the forecast shall be subsets of current schedule activities. In summary, the forecast shall include:

1. All submittals to be made during the period.
2. Special inspection events.
3. Engineer's observation as required by Special Inspection protocols.
4. All scheduled meetings.
5. All meetings planned or anticipated to be scheduled.
6. Utility interconnections.
7. Owner operations that are scheduled to be interrupted by construction activity.
8. Tie-ins to existing Owner facilities or building services.
9. Greater detail for large scale schedule activities.
10. Critical or major equipment deliveries.
11. Specialty subcontractor activities.
12. Specialty supplier/fabricator activities.
13. Other details as requested by the Engineer or Construction Manager.

D. If Contractor fails to complete activity by its latest scheduled completion date and this failure is anticipated to extend Contract Times (or Milestones), Contractor shall, within 7 days of such failure, submit a written statement as to how Contractor intends to correct nonperformance and return to acceptable current Progress Schedule. Actions by Contractor to complete the Work within Contract Times (or Milestones) shall not be justification for adjustment to Contract Price or Contract Times.

E. Owner may order Contractor to increase plant, equipment, labor force or working hours if Contractor fails to:

1. Complete a Milestone activity by its completion date.
2. Satisfactorily execute Work as necessary to prevent delay to overall completion of Project, at no additional cost to Owner.

F. Adverse Weather Days:

1. Expected adverse weather days shall be shown on the critical path. The number of adverse weather days shown per month shall not be less than the mean number of days for that particular month in which precipitation meets or exceeds 0.1 inch.
2. The mean number of days in which the precipitation meets or exceeds 0.1 inch shall be based upon the 30-year average from the most recent information available from the National Oceanic and Atmospheric Administration (NOAA) for the most proximate meteorological station to the Project Site.
3. The expected adverse weather days shall be shown in the CPS as an activity with the duration equal to the total number of adverse weather days expected for the entire duration of the project. Weather days shall accumulate from month to month during the life of the Project. The Contractor and the Engineer shall discuss and agree upon the number of adverse weather days experienced at the project site on a monthly basis. The results of this meeting shall be used to update the weather activity by either increasing or decreasing the duration of this activity.

G. Dealing with Alternatives:

1. All versions of the Detailed Progress Schedule up to, and including, the As-Planned Progress Schedule (Baseline), shall be based solely on the specific work sequences or procedures of construction indicated in or required by the Contract Documents for the Work as awarded, and shall exclude any “alternate” proposals.
2. The Engineer's final determination on any Contractor or -Packager proposed alternates shall not be made until after the -As Planned Progress Schedule is developed as provided in this section and consideration is given to the possible impact upon other Prime Contractors working on the Project.

1.06 NARRATIVE PROGRESS REPORT

A. Format:

1. Organize the same as Progress Schedule.
2. Identify, on a cover letter, reporting period, date submitted, and name of author of report.

B. Contents:

1. Number of days worked over the period; lowest, average and peak work force onsite; construction equipment staged onsite (including utility vehicles such as pickup trucks, maintenance vehicles, stake trucks). All figures shall be inclusive of subcontracted work and shall be so identified.
2. General progress of Work, including a listing of activities started and completed over the reporting period, mobilization/demobilization of subcontractors, and major milestones achieved. By activity, report in a table:
    a. Actual Start to Early Start comparison, displaying the dates and calculating percentage of activities where Actual Start was scheduled Early Start;
    b. Actual Duration to Original Duration comparison, for each activity;
    c. Actual Finish to Early Finish comparison, displaying the dates and calculating percentage of activities where Actual Finish was scheduled Early Finish.
3. Contractor's plan for management of Site (e.g., lay down and staging areas, construction traffic), utilization of construction equipment, buildup of trade labor, and identification of potential Contract changes.
4. Identification of new activities and sequences as a result of executed Contract changes.
5. Documentation of weather conditions over the reporting period, and any resulting impacts to the work.
6. Description of actual or potential delays, including related causes, and the steps taken or anticipated to mitigate their impact.
7. Changes to activity logic.
8. Changes to the critical path.
9. Identification of, and accompanying reason for, any activities added or deleted since the last report.
10. Steps taken to recover the schedule from Contractor or Packager-caused delays.

1.07 SCHEDULE ACCEPTANCE

A. Engineer's acceptance will demonstrate agreement that:

1. Proposed schedule is accepted with respect to:
    a. Contract Times, including Final Completion and all intermediate Milestones are within the specified times.
    b. Specified Work sequences and constraints are shown as specified.
    c. Specified Owner-furnished Equipment or Material arrival dates, or range of dates, are included.
    d. Access restrictions are accurately reflected.
    e. Startup and testing times are as specified.

f. Submittal review times are as specified.

g. Startup testing duration is as specified, and timing is acceptable.

2. In all other respects, Engineer's acceptance of Contractor's schedule indicates that, in Engineer's judgment, schedule represents reasonable plan for constructing Project in accordance with the Contract Documents. Engineer's review shall not make any change in Contract requirements. Lack of comment on any aspect of schedule that is not in accordance with the Contract Documents shall not thereby indicate acceptance of that change, unless Contractor has explicitly called the nonconformance to Engineer's attention in submittal. Schedule remains Contractor's responsibility and Contractor retains responsibility for performing all activities, for activity durations, and for activity sequences required to construct Project in accordance with the Contract Documents.

B. Unacceptable Preliminary Progress Schedule:

1. Make requested corrections; resubmit within 10 days.

2. Until acceptable to Engineer as Baseline Progress Schedule, continue review and revision process, during which time Contractor or Packager shall update schedule on a monthly basis to reflect actual progress and occurrences to date.

C. Unacceptable Detailed Progress Schedule:

1. Make requested corrections; resubmit within 10 days.

2. Until acceptable to Engineer as Baseline Progress Schedule, continue review and revision process.

D. Narrative Report: All changes to activity duration and sequences, including addition or deletion of activities subsequent to Engineer's acceptance of Baseline Progress Schedule, shall be delineated in Narrative Report current with proposed Updated Progress Schedule.

1.08 ADJUSTMENT OF CONTRACT TIMES

A. Reference General Conditions and Section 01 26 00, Contract Modification Procedures.

B. Evaluation and reconciliation of Adjustments of Contract Times shall be based on the Updated Progress Schedule at the time of proposed adjustment or claimed delay.

C. Float:

1. Total float is the number of days by which a part of the work in the CPM Construction Schedule may be delayed from its early start and finish dates without extending the Contract Times. The difference in time between the Project's scheduled early completion date, as submitted, and the required contract completion date, shall be considered as float. Float within the schedule, and total float within the overall schedule, is not for the exclusive use of either the Owner or the Contractor, but is jointly owned by both parties and is a resource available to be shared by both as needed to meet contract milestones and the contract completion dates.
2. The Contractor shall not sequester shared float through such strategies as extending activity duration estimates to consume available float, using preferential logic, using extensive crew/resource sequencing, etc. Since float time within the schedule is jointly owned, no time extensions shall be granted, or delay damages paid until the critical path of the CPM schedule is affected which extends the Work beyond a Milestone or Contract Completion Date.
3. Early completion schedules are generally not acceptable to the Owner but may be accepted as a convenience to the Contractor under the following conditions:
    a. The Contractor must submit a written request outlining the specific reasons for using an early completion schedule.
    b. The Contractor acknowledges and agrees in writing that the proposed reduction in time represents project time already paid for by the Owner as part of the Bid Price, and available to both the Contractor and the Owner for mitigation of impacts to the Project from any source. The Contractor shall not be entitled to any increase in Contract Price for failure to achieve the early completion and waives all claim to same.
    c. The Contractor shall not be entitled to any extension in Contract Time, nor to recover any delay, disruption, interference, hindrance, extension or acceleration costs, however caused, incurred because of extension of an early completion date established on the As-Planned CPS, until all Contract Float, if any, is used or consumed with the concurrence of the Engineer and performance or completion of the Work, or specified part, necessarily extends beyond the corresponding Contract Time or Milestone.
    d. Early completion schedules shall not be based on expedited approvals, inspections, or the relaxing of construction constraints by the Owner, Construction Manager or the Engineer.
    e. Early completion schedules must meet all other contract requirements.
    f. The Contractor acknowledges and agrees in writing that the Owner has the right to hold the final payment due the Contractor until the contractual end date.

g. Early completion schedule updates which have activities behind schedule shall be revised when requested by the Construction Manager.

D. Claims Based on Contract Times:

1. Where Engineer has not yet rendered formal decision on Contractor's Claim for adjustment of Contract Times, and parties are unable to agree as to amount of adjustment to be reflected in Progress Schedule, Contractor shall reflect an interim adjustment in the Progress Schedule as acceptable to Engineer.
2. It is understood and agreed that such interim acceptance shall not be binding on either Contractor or Owner, and shall be made only for the purpose of continuing to schedule Work until such time as formal decision has been rendered as to an adjustment, if any, of the Contract Times.
3. Contractor shall revise Progress Schedule prepared thereafter in accordance with Engineer's formal decision.

PART 2 PRODUCTS (NOT USED)

PART 3 EXECUTION

3.01 GENERAL

A. Pursuant to paragraph 1.01.A.3 of this Specification, the Contractor shall develop, submit, and finalize a detailed project schedule which shall serve as the baseline schedule for executing the Work under this Contract. To provide a forum for development of the schedule, the Engineer and Contractor shall conduct a 16-hour workshop during which:

1. The Engineer will be available to discuss with the Contractor the designer's perspective to constructing the Work and the constraints recognized in developing the approach. This shall include information gained during the design phase that may assist the Contractor with understanding the process functions and integration of the facilities and structures involved in the Work.
2. The Contractor and Engineer shall collaborate on development of the schedule, with the Engineer being available to assist with milestone discussions, sequence of construction details, explanation of scheduling requirements, design clarification, and the like. Recognizing that the schedule is a critical tool in the successful delivery of the Work, the Engineer's express interest is to assist in development of the schedule, as requested by the Contractor, and to obtain better knowledge of the Contractor's plan by participating in/observing development of the overall schedule.
3. A draft baseline schedule shall be formulated for development into the computerized schedule, which shall be submitted after the workshop, pursuant to paragraph 1.01.A.3 of this Specification.

B. This collaborative effort does not in any way relieve the Contractor of their responsibility for the preparation, management, and maintenance of the project schedule.

C. To be prepared for the Scheduling Workshop, the Contractor shall develop and be ready to discuss an overall outline of the project schedule and general sequence of work, which includes, but is not limited to:

1. Designation of responsible superintendent(s) for the various aspects/locations of the Work.
2. List of technical and administrative submittals.
3. List of subcontractors expected to be assigned activity responsibility.
4. Major product procurement.

D. The Engineer shall be prepared to discuss:

1. Submittals requirements.
2. Design details and special requirements.
3. Schedule management and progress update requirements.
4. Schedule format and presentation.
5. Major equipment and process requirements.
6. Instrumentation and Control requirements.
7. Testing and Startup requirements.
8. Owner training requirements.

E. The meeting shall also recognize additional issues and questions as addressed by attendees.

F. The Contractor shall advise the Engineer no less than 14 days prior to the desired date as to when the Contractor is scheduling the Schedule Workshop. The Schedule Workshop shall be scheduled to occur prior to submission of the Detailed Progress Schedule.

END OF SECTION

SECTION 01 33 00
SUBMITTAL PROCEDURES

PART 1 GENERAL

1.01 DEFINITIONS

A. Action Submittal: Written and graphic information submitted by Contractor or Supplier that requires Engineer's approval.

B. Informational Submittal: Information submitted by Contractor or Supplier that requires Engineer's review and determination that submitted information is in accordance with the Conditions of the Contract.

1.02 PROCEDURES

A. Submittals shall follow the Project Specific Records Management Information, attached as a supplement to this Specification.

B. Electronic Submittals: Submittals shall, unless specifically excepted, be made in electronic format.

1. Each submittal shall be an electronic file in Portable Document Format (PDF).
2. Each submittal shall be delivered under the guidelines set out in the Project Specific Records Management Information, attached as a supplement to this Specification.
3. Electronic files that contain more than ten pages in PDF format shall contain internal bookmarking from an index page to major sections of the Document.
4. PDF files shall be set to open "Bookmarks and Page" view.
5. Add general information to each PDF file, including title, subject, author, and keywords.
6. PDF files shall be set up to print legibly at 8.5-inch by 11-inch, 11-inch by 17-inch, or 22-inch by 34-inch. No other paper sizes shall be accepted.
7. Submit new electronic files for each resubmittal. Resubmitted file shall be a complete file with corrections annotated appropriately.
8. Include a copy of the Contractor's Submittal form with each electronic file.
9. Engineer will reject a submittal that is not electronically submitted, unless specifically excepted.
10. Provide Engineer with authorization to reproduce and distribute each file as many times as necessary for Project documentation.

C. Transmittal of Submittal:

1. Complete, sign, and transmit with each submittal package, one Submittal form in format approved by Engineer.
2. Identify each submittal with the following:
    a. Numbering and Tracking System:
        1) Sequentially number each submittal.
        2) Resubmission of submittal shall have original number with sequential alphabetic or numeric suffix.
    b. Specification section and paragraph to which submittal applies.
    c. Project title and Engineer's project number.
    d. Date of transmittal.
    e. Names of Contractor, Subcontractor or Supplier, and manufacturer as appropriate.
3. Specific details shall be included identifying and describing any deviation or variation from Contract Documents.
4. Contractor shall review and approve each submittal and attest that submittal meets contract requirements by its own stamp and signature prior to submitting to Engineer. No review shall be conducted by Engineer if the Contractor's expressed approval is absent.

D. Format:

1. Do not base Shop Drawings on reproductions of Contract Documents.
2. Package submittal information by individual Specification section. Do not combine different Specification sections together in submittal package, unless otherwise directed in Specification.
3. Present in a clear and thorough manner and in sufficient detail to show kind, size, arrangement, and function of components, materials, and devices, and compliance with Contract Documents.
4. All documents, Drawings, and data submitted shall be in the English language, with all dimensions in USCS units.

E. Timeliness: Schedule and submit in accordance with Schedule of Submittals, and requirements of individual Specification sections.

F. Processing Time:

1. Time for review shall commence upon Engineer's receipt of submittal.
2. Engineer will consult with Owner and act on Contractor's submittal and transmit response to Contractor not later than 2 weeks after receipt, unless otherwise specified.
3. Resubmittals shall be subject to same review time.
4. No adjustment of Contract Times or Price shall be allowed as a result of delays in progress of Work caused by rejection and subsequent resubmittals.

G. Resubmittals: Clearly identify each correction or change made and include an index of changes/corrections as a submitted item annotated accordingly on the submittal transmittal.

H. Incomplete Submittals:

1. Engineer will return entire submittal for Contractor's revision if preliminary review deems it incomplete.
2. When any of the following are missing, submittal shall be deemed incomplete: Submittal form; completed and signed.

I. Submittals not required by Contract Documents: Will not be reviewed and will be returned stamped "Not Subject to Review/For Information Only."

1.03 ACTION SUBMITTALS

A. Prepare and submit Action Submittals required by individual Specification sections.

B. Shop Drawings:

1. Identify and Indicate:
   a. Applicable Contract Drawing and Detail number, products, units and assemblies, and system or equipment identification or tag numbers.
   b. Equipment and Component Title: Identical to title shown on the Drawings.
   c. Critical field dimensions and relationships to other critical features of Work. Note dimensions established by field measurement.
   d. Project-specific information drawn accurately to scale.
2. Manufacturer's standard schematic drawings and diagrams as follows:
   a. Modify to delete information that is not applicable to the Work.
   b. Supplement standard information to provide information specifically applicable to the Work.
3. Product Data: Provide as specified in individual Specifications.
4. Foreign Manufacturers: The Project includes a Buy-American requirement as defined in the contract documents. If American products are not available, foreign products may be proposed. When proposed, include names and addresses of at least two companies that maintain technical service representatives close to Project.

C. Samples:

1. Copies: Two, unless otherwise specified in individual Specifications.
2. Preparation: Mount, display, or package Samples in manner specified to facilitate review of quality. Attach label on unexposed side that includes the following:
   a. Manufacturer name.

b. Model number.

c. Material.

d. Sample source.

3. Manufacturer's Color Chart: Units or sections of units showing full range of colors, textures, and patterns available.

4. Full-size Samples:

a. Size as indicated in individual Specification section.

b. Prepared from same materials to be used for the Work.

c. Cured and finished in manner specified.

d. Physically identical with product proposed for use.

D. Action Submittal Dispositions: Engineer will review, comment, stamp, and distribute as noted:

1. Not Reviewed (NR):

a. Document was not reviewed.

b. Distribution: Electronic.

2. No Comments (NC):

a. Document was reviewed without comments. Consider the drawing submittal process complete.

b. Distribution: Electronic.

3. Furnish as Corrected (FC):

a. Document was reviewed with comments. Work shall proceed with all comments as noted. Record drawings reflecting the comments shall be submitted before equipment is shipped, however, the drawing review submittal process is considered complete.

b. Contractor shall maintain a log of all comments including Contractor's disposition of each comment. The Comment Log shall be returned with resubmittals and included in Contractor's monthly report.

c. Distribution: Electronic.

4. Correction Required (CR):

a. Document was reviewed with comments. The corrections shall be made, as noted. Revised copies shall be resubmitted for review before any work may proceed.

b. Contractor shall maintain a log of all comments including Contractor's disposition of each comment. The Comment Log shall be returned with resubmittals and included in Contractor's monthly report.

c. Distribution: Electronic.

5. Rejected (RJ):

a. The drawings have not been reviewed in detail; however, it was determined that the documents do not meet the project requirements. The documents shall be revised and resubmitted for review before any work may proceed.

b. Distribution: Electronic.

1.04 INFORMATIONAL SUBMITTALS

A. General:

1. Refer to individual Specification sections for specific submittal requirements.
2. Engineer will review each required submittal. If submittal meets conditions of the Contract, Engineer will forward copy to appropriate parties. If Engineer determines submittal does not meet conditions of the Contract and is therefore considered unacceptable, Engineer will require that submittal be corrected and resubmitted.

B. Certificates:

1. General:
   a. Provide statement that includes signature of entity responsible for preparing certification.
   b. Signed by officer or other individual authorized to sign documents on behalf of that entity.
2. Welding: In accordance with individual Specification sections.
3. Installer: Prepare written statements on manufacturer's letterhead certifying installer complies with requirements as specified in individual Specification section.
4. Material Test: Prepared by qualified testing agency, on testing agency's standard form, indicating and interpreting test results of material for compliance with requirements.
5. Certificates of Successful Testing or Inspection: Submit when testing or inspection is required by Laws and Regulations or governing agency or specified in individual Specification sections.
6. Manufacturer's Certificate of Compliance: In accordance with Section 01 61 00, Common Product Requirements.

C. Manufacturer-design Data:

1. Written and graphic information.
2. List of assumptions.
3. List of performance and design criteria.
4. Summary of loads or load diagram, if applicable.
5. Calculations.
6. List of applicable codes and regulations.
7. Name and version of software.
8. Information requested in individual Specification section.

D. Manufacturer's Instructions: Written or published information that documents manufacturer's recommendations, guidelines, and procedures in accordance with individual Specification section.

E. Operation and Maintenance Data: As required in individual Specification sections.

F. Quality Control Documentation: As required in individual Specification sections.

G. Schedules:

1. Schedule of Submittals: Prepare separately or in combination with Progress Schedule.
    a. Show for each, at a minimum, the following:
        1) Specification section number.
        2) Identification by numbering and tracking system as specified under Paragraph Transmittal of Submittal.
        3) Estimated date of submission to Engineer, including reviewing and processing time.
    b. On a monthly basis, submit updated Schedule of Submittals to Engineer if changes have occurred or resubmittals are required.

H. Special Guarantee: Contractor's written guarantee as required in individual Specification sections.

I. Statement of Qualification: Evidence of qualification, certification, or registration as required in Contract Documents to verify qualifications of professional land surveyor, engineer, materials testing laboratory, specialty Subcontractor, trade, Specialist, consultant, installer, and other professionals.

J. Submittals Required by Laws, Regulations, and Governing Agencies:

1. Promptly submit notifications, reports, certifications, payrolls, and otherwise as may be required, directly to the applicable federal, state, or local governing agency or their representative.
2. Transmit to Engineer for Owner's records one copy of correspondence and transmittals (to include enclosures and attachments) between Contractor and governing agency.

K. Test, Evaluation, and Inspection Reports:

1. General: Shall contain signature of person responsible for test or report.
2. Factory:
    a. Identification of product and Specification section, type of inspection or test with referenced standard or code.
    b. Date of test, Project title and number, and name and signature of authorized person.
    c. Test results.
    d. If test or inspection deems material or equipment not in compliance with Contract Documents, identify corrective action necessary to bring into compliance.
    e. Provide interpretation of test results, when requested by Engineer.
    f. Other items as identified in individual Specification sections.

3. Field:
    a. As a minimum, include the following:
        1) Project title and number.
        2) Date and time.
        3) Record of temperature and weather conditions.
        4) Identification of product and Specification section.
        5) Type and location of test, Sample, or inspection, including referenced standard or code.
        6) Date issued, testing laboratory name, address, and telephone number, and name and signature of laboratory inspector.
        7) If test or inspection deems material or equipment not in compliance with Contract Documents, identify corrective action necessary to bring into compliance.
        8) Provide interpretation of test results, when requested by Engineer.
        9) Other items as identified in individual Specification sections.

L. Testing and Startup Data: In accordance with individual Specification sections.

1.05 ENGINEER'S REVIEW

A. Submittal review does not change the terms of the Contract.

B. Submittal review does not alleviate the contractor from meeting all terms and conditions as outlined in the Specifications, Drawings, plans, etc.

1.06 SUPPLEMENTS

A. The supplements listed below, following "End of Section", are part of this Specification.
    1. Project Specific Submittal Register.
    2. Project Specific Records Management Information.

PART 2 PRODUCTS (NOT USED)

PART 3 EXECUTION (NOT USED)

END OF SECTION

INTENTIONALLY LEFT BLANK

SECTION 01 33 00.02
SUBMITTAL PROCEDURES SUPPLEMENT
PROJECT SPECIFIC RECORDS MANAGEMENT INFORMATION

PROJECT SPECIFIC INFORMATION

Owner	Sewerage and Water Board of New Orleans
Project Name	1444 WPC Fuel Oil Delivery System
Records Management Software	Cloud Based Contract Management Platform
Managing Company	POWER Engineers
Contact Name	To Be Determined
Contact Email	To Be Determined

RECORDS MANAGEMENT SOFTWARE BY DOCUMENT TYPE

Document Type	Records Management Software
Design Documents	Cloud Based Contract Management Platform
Contractor Submittals	Cloud Based Contract Management Platform
Contractor RFIs	Cloud Based Contract Management Platform
Progress Schedules	Cloud Based Contract Management Platform
Meeting Minutes	Cloud Based Contract Management Platform
Contractor Pay Applications	Cloud Based Contract Management Platform
Work Change Directives	Cloud Based Contract Management Platform
Project Photos	Cloud Based Contract Management Platform
Daily Reports	Cloud Based Contract Management Platform

DOCUMENT UPLOAD PROCEDURES

General: Contractors and Suppliers will transmit submittals by uploading them electronically into the Cloud Based Contract Management Platform.

Submittal Requirements: To be accepted for review, all Submittals must include the following:

- Transmittal Cover Sheet – the Transmittal cover sheet shall be uploaded as an individual file.
  - Specification Section
  - Accurate sequential numbering
  - Date
  - Correct Status: New or Re-Submittal
  - Correct Project Number
  - Correct Submittal Type
  - Contractor's review stamp indicating the submittal meets contract requirements
- Submittal Documents - It is important that each individual document or drawing be uploaded as an independent file that matches the document/drawing file name, such that these individual documents or drawings can be tracked as individual documents or drawings through the review process.

Document Property	Input
Name	Refer to **Uploading Best Practices** for the file naming convention
Document Title	The Document Title shall match the title in the drawing title block or datasheet.
Document Type	Submittal or RFI
Project/Package	C1444
Originated By	This attribute is intended to indicate the entity that uploaded the document to SharePoint.
Author	This attribute is intended to indicate the entity that 'authored' the document, such as a subconsultant, original equipment manufacturer, supplier.
RFI/Submittal Number	Refer to **Uploading Best Practices** for the RFI and Submittal naming convention
Date Originated	Date the file is uploaded
Submittal Type	Action Submittal, Informational Submittal, Data Sheets, Drawings, Schedules, or Specifications
Specification Section	Specification section associated with the submittal

Document Property	Input
Revision	Revision number of the specific file being uploaded (usually included in the document title block) ▪ For a submittal Cover Page: Type 0 for initial submittal; sequential numbering for re-submittals ▪ For Individual Documents within a submittal: Type the revision number of the specific document (drawing, specification, datasheet, etc.). Please note that if a submittal revision is required, only the specific revised files shall be uploaded.
Revision Date	The date associated with the individual document revision (usually included in the document title block
RFI Category	Question or Clarification
Submittal Category	Preliminary, Issued for Review, Issued for Approval, Issued for Construction, Issued for Permit, Record/As-Built, Final, Issued for Bid
Document Remarks (OPTIONAL)	(OPTIONAL) Free-form attribute to provide any brief information about the subject document not captured by another attribute.

Uploading Best Practices:

- Requirement: Individual Submittal documents will be reviewed and dispositioned independently, which requires individual documents be uploaded separately so that reviews, comments, responses, and revisions can be tracked separately. For example, a submittal that includes a drawing package with 15 sheets, shall be uploaded as 15 individual files. Deviation from this practice will result in a rejection of the submittal.
- Name guidance for select submittal types:

  General criteria is that file name is materially equivalent to base document number allowing ability to search, and filter submittal data by actual document number.

  - Coversheet: [Submittal number].[Submittal revision].pdf

    Example: SN-005. r0.pdf

  - Drawings: [Drawing Number].[Sheet number (typ 3 digits)].[drawing revision number].pdf

    Example: A5E51274298A.013.rAA.pdf

  - Datasheets or Product Data: [DS].[Unique Datasheet or Product Data Number].[datasheet revision number].pdf

    Example: DS.HindlePowerAT10.1.r0.pdf

  - Calculations: [CALC].[Calculation Number].[Calculation revision number].pdf
    [Calculation Number] = [single letter discipline]-[###]

    Example: CALC.E-001.r0.pdf

- Document Title ideally is the exact title of the subject document, providing another way to search and filter by information directly correlated to a document.
- Document Remarks attribute is a free-form attribute intended for brief additional information not captured by another attribute; best practice is to include the date of when the remarks were added. Examples could include explanation of VOID status.
- Each RFI shall include a specific focused topic. RFIs with multiple focus/topics will be rejected.
- For numbering RFI files, please use the format of RFI-XXX, and number sequentially based on the previous RFI number.
- For numbering Submittals, please use the format SN-XXX, and organize sequentially based on the previous Submittals.

RECORDS MANAGEMENT STATUS STAMP

The following stamp will be affixed to each individual document or drawing reviewed by the Engineer, which will indicate the specific disposition of the individual document.

☐ **Not Reviewed (NR)**

☐ **No Comments (NC)**

☐ **Furnish as Corrected (FC)**

☐ **Correction Required (CR)**

☐ **Rejected (RJ)**

This review is for general conformance with the design concept of the project only and does not relieve the Contractor from compliance with the Contract Documents, National, State, or Local Codes and Standards.

By:_____ Date:_____

POWER Engineers, Inc.

Not Reviewed (NR) Document was not reviewed.
No Comments (NC) Document was reviewed without comments. Consider the drawing submittal process complete
Furnish as Corrected (FC) Document was reviewed with comments. Work shall proceed with all comments as noted. Record drawings reflecting the comments shall be submitted before equipment is shipped, however, the drawing review submittal process is considered complete.
Correction Required (CR) Document was reviewed with comments. The corrections shall be made, as noted. Revised copies shall be resubmitted for review before any work may proceed.
Rejected (RJ) The drawings have not been reviewed in detail; however, it was determined that the documents do not meet the project requirements. The documents shall be revised and resubmitted for review before any work may proceed.

SECTION 01 42 13
ABBREVIATIONS AND ACRONYMS

PART 1 GENERAL

1.01 REFERENCE TO STANDARDS AND SPECIFICATIONS OF TECHNICAL SOCIETIES

A. Reference to standards and specifications of technical societies and reporting and resolving discrepancies associated therewith shall be as provided in Article 3 of the General Conditions, and as may otherwise be required herein and in the individual Specification sections.

B. Work specified by reference to published standard or specification of government agency, technical association, trade association, professional society or institute, testing agency, or other organization shall meet requirements or surpass minimum standards of quality for materials and workmanship established by designated standard or specification.

C. Where so specified, products or workmanship shall also meet or exceed additional prescriptive or performance requirements included within Contract Documents to establish a higher or more stringent standard of quality than required by referenced standard.

D. Where two or more standards are specified to establish quality, product and workmanship shall meet or exceed requirements of most stringent.

E. Where both a standard and a brand name are specified for a product in Contract Documents, the proprietary product named shall meet or exceed requirements of the specified reference standard.

F. Copies of standards and specifications of technical societies:

1. Copies of applicable referenced standards have not been bound in these Contract Documents.
2. Where copies of standards are needed by Contractor, obtain a copy or copies directly from publication source and maintain in an orderly manner at the Site as Work Site records, available to Contractor's personnel, Subcontractors, Owner, and Engineer.

1.02 ABBREVIATIONS

A. Abbreviations for trade organizations and government agencies: Following is a list of construction industry organizations and government agencies to which references may be made in the Contract Documents, with abbreviations used.

1. AA Aluminum Association
2. AABC Associated Air Balance Council
3. AAMA American Architectural Manufacturers Association
4. AASHTO American Association of State Highway and Transportation Officials

5. ABMA American Bearing Manufacturers' Association
6. ACI American Concrete Institute
7. AEIC Association of Edison Illuminating Companies
8. AGA American Gas Association
9. AGMA American Gear Manufacturers' Association
10. AI Asphalt Institute
11. AISC American Institute of Steel Construction
12. AISI American Iron and Steel Institute
13. AITC American Institute of Timber Construction
14. ALS American Lumber Standards
15. AMCA Air Movement and Control Association
16. ANSI American National Standards Institute
17. APA APA – The Engineered Wood Association
18. API American Petroleum Institute
19. APWA American Public Works Association
20. AHRI Air-Conditioning, Heating, and Refrigeration Institute
21. ASA Acoustical Society of America
22. ASABE American Society of Agricultural and Biological Engineers
23. ASCE American Society of Civil Engineers
24. ASHRAE American Society of Heating, Refrigerating and Air-Conditioning Engineers, Inc.
25. ASME American Society of Mechanical Engineers
26. ASNT American Society for Nondestructive Testing
27. ASSE American Society of Sanitary Engineering
28. ASTM ASTM International
29. AWI Architectural Woodwork Institute
30. AWPA American Wood Preservers' Association
31. AWPI American Wood Preservers' Institute
32. AWS American Welding Society
33. AWWA American Water Works Association
34. BHMA Builders Hardware Manufacturers' Association
35. CBM Certified Ballast Manufacturer
36. CDA Copper Development Association
37. CGA Compressed Gas Association
38. CISPI Cast Iron Soil Pipe Institute
39. CMAA Crane Manufacturers' Association of America
40. CRSI Concrete Reinforcing Steel Institute
41. CS Commercial Standard
42. CSA Canadian Standards Association
43. CSI Construction Specifications Institute

44.	DIN	Deutsches Institut für Normung e.V.
45.	DIPRA	Ductile Iron Pipe Research Association
46.	DOTD	Department of Transportation and Development
47.	EIA	Electronic Industries Alliance
48.	EJCDC	Engineers Joint Contract Documents' Committee
49.	EPA	Environmental Protection Agency
50.	ETL	Electrical Test Laboratories
51.	FAA	Federal Aviation Administration
52.	FCC	Federal Communications Commission
53.	FDA	Food and Drug Administration
54.	FEMA	Federal Emergency Management Agency
55.	FIPS	Federal Information Processing Standards
56.	FM	FM Global
57.	Fed. Spec.	Federal Specifications (FAA Specifications)
58.	FS	Federal Specifications and Standards (Technical Specifications)
59.	GA	Gypsum Association
60.	GANA	Glass Association of North America
61.	HI	Hydraulic Institute
62.	HMI	Hoist Manufacturers' Institute
63.	IBC	International Building Code
64.	ICBO	International Conference of Building Officials
65.	ICC	International Code Council
66.	ICEA	Insulated Cable Engineers' Association
67.	IEC	International Electrotechnical Commission
68.	IFC	International Fire Code
69.	IEEE	Institute of Electrical and Electronics Engineers, Inc.
70.	IESNA	Illuminating Engineering Society of North America
71.	IFI	Industrial Fasteners Institute
72.	IGMA	Insulating Glass Manufacturer's Alliance
73.	IMC	International Mechanical Code
74.	INDA	Association of the Nonwoven Fabrics Industry
75.	IPC	International Plumbing Code
76.	IRI	Industrial Risk Insurers
77.	ISA	International Society of Automation
78.	ISO	International Organization for Standardization
79.	ITL	Independent Testing Laboratory
80.	JIC	Joint Industry Conferences of Hydraulic Manufacturers
81.	LDEQ	Louisiana Department of Environmental Quality
82.	MIA	Marble Institute of America

83. MIL Military Specifications
84. MMA Monorail Manufacturers' Association
85. MSS Manufacturer's Standardization Society
86. NAAMM National Association of Architectural Metal Manufacturers
87. NACE NACE International
88. NBGQA National Building Granite Quarries Association
89. NEBB National Environmental Balancing Bureau
90. NEC National Electrical Code
91. NECA National Electrical Contractor's Association
92. NEMA National Electrical Manufacturers' Association
93. NESC National Electrical Safety Code
94. NETA InterNational Electrical Testing Association
95. NFPA National Fire Protection Association
96. NHLA National Hardwood Lumber Association
97. NICET National Institute for Certification in Engineering Technologies
98. NIST National Institute of Standards and Technology
99. NRCA National Roofing Contractors Association
100. NRTL Nationally Recognized Testing Laboratories
101. NSF NSF International
102. NSPE National Society of Professional Engineers
103. NTMA National Terrazzo and Mosaic Association
104. NWWDA National Wood Window and Door Association
105. OSHA Occupational Safety and Health Act (both Federal and State)
106. PCI Precast/Prestressed Concrete Institute
107. PEI Porcelain Enamel Institute
108. PPI Plastic Pipe Institute
109. PS Product Standards Section-U.S. Department of Commerce
110. RMA Rubber Manufacturers' Association
111. RUS Rural Utilities Service
112. SAE SAE International
113. SAMA Scientific Apparatus Makers Association
114. SDI Steel Deck Institute
115. SDI Steel Door Institute
116. SJI Steel Joist Institute
117. SMACNA Sheet Metal and Air Conditioning Contractors National Association
118. SPI Society of the Plastics Industry
119. SSPC The Society for Protective Coatings
120. STI/SPFA Steel Tank Institute/Steel Plate Fabricators Association

121.	SWI	Steel Window Institute
122.	TEMA	Tubular Exchanger Manufacturers' Association
123.	TCA	Tile Council of North America
124.	TIA	Telecommunications Industry Association
125.	UBC	Uniform Building Code
126.	UFC	Uniform Fire Code
127.	UL	(Formerly known as Underwriters Laboratories Inc.)
128.	UMC	Uniform Mechanical Code
129.	USBR	U.S. Bureau of Reclamation
130.	WCLIB	West Coast Lumber Inspection Bureau
131.	WI	Wood Institute
132.	WWPA	Western Wood Products Association

PART 2 PRODUCTS (NOT USED)

PART 3 EXECUTION (NOT USED)

END OF SECTION

INTENTIONALLY LEFT BLANK

SECTION 01 43 33
MANUFACTURERS' FIELD SERVICES

PART 1 GENERAL

1.01 DEFINITIONS

A. Person-Day: One person for 8 hours within regular Contractor working hours.

B. Supplier, Vendor, or Seller may refer to the Contractor, the Contractor's Sub-Contractor or Supplier, a packager, OEM, manufacturer or manufacturer's representative, or other entity, depending on the context. Any Contract requirements of the Supplier, Vendor, or Seller shall ultimately be the responsibility of the Contractor.

1.02 SUBMITTALS

A. Informational Submittals:

1. Training Schedule: Submit, in accordance with requirements of this Specification, not less than 60 days prior to start of equipment testing and startup and revise as necessary for acceptance.

2. Lesson Plan: Submit, in accordance with requirements of this Specification, proposed lesson plan not less than 21 days prior to scheduled training and revise as necessary for acceptance.

3. Training Session Documentation: Furnish Owner with one complete electronic set of documentation of the training sessions.

1.03 QUALIFICATION OF MANUFACTURER'S REPRESENTATIVE

A. Authorized technical representative of the manufacturer, factory trained, and experienced in the technical applications, installation, operation, and maintenance of respective equipment, subsystem, or system, with full authority by the equipment manufacturer to issue the certifications required of the manufacturer. Further, the technical representative responsible for Owner Training shall have the preceding qualifications plus have received formal training for conducting formal training sessions, including use of audio-visual and other training aids, and have conducted at least five such training sessions prior to those addressed herein. Additional qualifications may be specified in the individual Specification section.

B. Representative subject to acceptance by Owner and Engineer. No substitute representatives shall be allowed unless prior written approval by such has been given.

PART 2 PRODUCTS (NOT USED)

PART 3 EXECUTION

3.01 FULFILLMENT OF SPECIFIED MINIMUM SERVICES

A. Furnish manufacturers' services as required to meet the requirements of this Contract. At a minimum such services are required for all major mechanical, electrical and control equipment.

B. Where time is necessary in excess of that stated in the Specifications for manufacturers' services, or when a minimum time is not specified, time required to perform specified services shall be considered incidental.

C. Schedule manufacturer' services to avoid conflict with other onsite testing or other manufacturers' onsite services.

D. Determine, before scheduling services, that conditions necessary to allow successful testing have been met.

E. Only those days of service approved by Engineer shall be credited to fulfill specified minimum services.

F. Manufacturer's onsite services shall include:

1. Assistance during product (system, subsystem, or component) installation to include observation, guidance, instruction of Contractor's assembly, erection, installation or application procedures.

2. Inspection, checking, and adjustment as required for product (system, subsystem, or component) to function as warranted by manufacturer and necessary to furnish Manufacturer's Certificate of Proper Installation.

3. Providing, on a daily basis, copies of manufacturers' representatives field notes and data to Owner's representative.

4. Revisiting the Site as required to correct problems and until installation and operation are acceptable to Engineer.

5. Resolution of assembly or installation problems attributable to or associated with respective manufacturer's products and systems.

6. Assistance during functional and performance testing, and facility startup and evaluation.

7. Recorded training of Owner's personnel in the operation and maintenance of respective product as required. Contractor is required to coordinate with the Owner to confirm appropriate personnel are available during the scheduled training time.

3.02 MANUFACTURER'S CERTIFICATE OF PROPER INSTALLATION

A. The Manufacturer shall provide technical representation to the field to perform a pre-startup check that will assure the Manufacturer and the Owner that the Contractor has, in fact, properly installed the equipment and, in fact, performed the required installation checks. Upon so doing, a Manufacturer's Certificate of Proper Installation form, a copy of which is attached to this section, shall be completed and signed by equipment manufacturer's representative.

B. Such form shall certify signing party is a duly authorized representative of manufacturer, is empowered by manufacturer to inspect, approve, and operate their equipment and is authorized to make recommendations required to ensure equipment is complete and operational.

3.03 TRAINING

A. General:

1. Furnish manufacturers' representatives for detailed classroom and hands-on training to Owner's personnel on operation and maintenance of specified product (system, subsystem, component) and as may be required in applicable Specifications.

2. Furnish trained, articulate personnel to coordinate and expedite training, to be present during training coordination meetings with Owner, and familiar with operation and maintenance manual information specified in Section 01 78 23, Operation and Maintenance Data.

3. Manufacturer's representative shall be familiar with facility operation and maintenance requirements as well as with specified equipment.

4. Furnish complete training materials, to include operation and maintenance data, to be retained by each trainee.

B. Training Schedule:

1. List specified equipment and systems that require training services and show:

   a. Respective manufacturer.

   b. Estimated dates for installation completion.

   c. Estimated training dates.

2. Allow for multiple sessions when several shifts are involved.

3. Adjust schedule to ensure training of appropriate personnel as deemed necessary by Owner, and to allow full participation by manufacturers' representatives. Adjust schedule for interruptions in operability of equipment.

4. Coordinate with Section 01 91 14, Equipment Testing and Facility Startup.

C. Lesson Plan: When Contractor training of Owner personnel is specified, prepare a lesson plan for each required course containing the following minimum information:

1. Title and objectives.

2. Recommended attendees (such as, managers, engineers, operators, maintenance).

3. Course description, outline of course content, and estimated class duration.

4. Format (such as, lecture, self-study, demonstration, hands-on).

5. Instruction materials and equipment requirements.

6. Resumes of instructors providing training.

D. Prestartup Training:

1. Coordinate training sessions with Owner's operating personnel and manufacturers' representatives, and with submission of operation and maintenance manuals in accordance with Section 01 78 23, Operation and Maintenance Data.

2. Complete no more than 14 days prior to beginning of facility startup, but no less than 7 days prior to.

E. Post-startup Training: If required in Specifications, furnish and coordinate training of Owner's operating personnel by respective manufacturer's representatives.

3.04 SUPPLEMENTS

A. The supplement listed below, following "End of Section", is part of this Specification.

1. Form: Manufacturer's Certificate of Proper Installation.

END OF SECTION

MANUFACTURER'S CERTIFICATE OF PROPER INSTALLATION

OWNER _____ EQPT SERIAL NO: _____

EQPT TAG NO: _____ EQPT/SYSTEM: _____

PROJECT NO: _____ SPEC. SECTION: _____

I hereby certify that the above-referenced equipment/system has been:

(Check Applicable)

☐ Installed in accordance with Manufacturer's recommendations.

☐ Inspected, checked, and adjusted.

☐ Serviced with proper initial lubricants.

☐ Electrical and mechanical connections installed in accordance with manufacturer's requirements.

☐ All applicable safety equipment has been properly installed.

☐ Functional tests.

☐ System has been performance tested and meets or exceeds specified performance requirements. (When complete system of one manufacturer)

Note: Attach any performance test documentation from manufacturer.

Comments: _____

_____

_____

_____

I, the undersigned Manufacturer's Representative, hereby certify that I am (i) a duly authorized representative of the manufacturer, (ii) empowered by the manufacturer to inspect, approve, and operate their equipment and (iii) authorized to make recommendations required to ensure equipment furnished by the manufacturer is complete and operational, except as may be otherwise indicated herein. I further certify that all information contained herein is true and accurate.

Date: _____, 20___

Manufacturer: _____

By Manufacturer's Authorized Representative: _____

(Authorized Signature)

INTENTIONALLY LEFT BLANK

SECTION 01 45 16.13
CONTRACTOR QUALITY CONTROL

PART 1 GENERAL

1.01 REFERENCES

A. The following is a list of standards which may be referenced in this section:

1. ASTM International (ASTM):
   a. D3740, Evaluation of Agencies Engaged in the Testing and/or Inspection of Soil and Rock as Used in Engineering Design and Construction.
   b. E329, Use in the Evaluation of Testing and Inspection Agencies as Used in Construction.

1.02 QUALITY CONTROL

A. Quality control is the responsibility of the Contractor, and the Contractor shall maintain control over construction and installation processes to assure compliance with specified requirements of Contract Documents.

B. Means and methods of construction and installation processes are the responsibility of the Contractor, and at no time is it the intent of the Engineer to supersede or void that responsibility. In the event there is a degree of uncertainty that the process observed or planned shall accomplish the required quality, the Engineer shall refer to the Contractor's Quality Control Plan and initiate discussion with the person primarily responsible for the process or installation in question. Should this interface not reconcile the issue or concern, the concern shall be elevated to the appropriate level in the respective organizations until reconciliation has been reached. The Engineer intends to implement Quality Assurance practices in observing the Work in such a manner that assures the Contractor is taking the necessary actions to prevent and avoid rework or the need for corrective action. In the event observations reveal a failure of the Contractor's Quality Control System, the Engineer will initiate actions to restore the quality system through quality oriented discussions and collaboration with the Contractor. This does not imply or state that the Engineer will direct the Contractor's activities. It does mean that the Engineer will be onsite monitoring the Quality Control activity of the Contractor with the intent of assuring quality results are consistently and routinely achieved within the requirements of the Contract Documents and the objectives of the Owner.

1.03 DEFINITIONS

A. Contractor Quality Control (CQC): The means by which Contractor ensures that the construction, to include that performed by subcontractors and suppliers, complies with the requirements of the Contract.

B. Quality Control System (QCS):

1. The system developed and implemented by the Contractor that establishes and maintains a comprehensive and effective approach to ensure that the Works comply with the Contract.
2. The QCS shall consist of plans, procedures, resources, and the organization necessary to ensure adequate quality planning, assurance, and control occur to achieve the requirements of the Contract Documents and the objectives of the Owner, as well as ensure the quality of materials, equipment, workmanship, construction, fabrication, and operations covering both onsite and off-site work by the Contractor, inclusive of subcontracted elements of the Work.
3. The Owner is purchasing a newly constructed Work, and as such has every right to expect the Contractor to provide a product that is new – not repaired, restored, reworked, or otherwise made to look like new. The effectiveness of this system shall be gauged by the level of success achieved in preventing non-compliant work and deficiencies that require corrective actions and/or repairs.

C. Definable Feature of Work (DFOW): DFOW is a task that is separate and distinct from other tasks, has separate control requirements, and may be identified by different trades or disciplines, or it may be work by the same trade in a different environment.

1.04 SUBMITTALS

A. Informational Submittals:

1. CQC Plan: Submit, not later than 30 days after receipt of Notice to Proceed.
2. CQC Report: Submit, monthly.
3. CQC Daily Report.

1.05 OWNER'S QUALITY ASSURANCE

A. All Work is subject to Owner's quality assurance program and testing at all locations and at all reasonable times before acceptance to ensure strict compliance with the terms of the Contract Documents.

B. Owner's quality assurance program and tests are for the sole benefit of Owner and do not:

1. Relieve Contractor of responsibility for providing adequate quality control measures;
2. Relieve Contractor of responsibility for damage to or loss of the material before acceptance;
3. Constitute or imply acceptance; or
4. Affect the continuing rights of Owner after acceptance of the completed Work.

C. The presence or absence of a quality assurance representative does not relieve Contractor from any Contract requirement.

D. Promptly furnish all facilities, labor, and material reasonably needed for performing such safe and convenient monitoring and tests as may be required by Engineer.

E. Owner may charge Contractor for any additional cost of inspection or test when Work is not ready at the time specified by Contractor for inspection or test, or when prior rejection makes re-inspection or retest necessary. Quality assurance inspections and tests shall be properly coordinated by the Contractor to allow said quality assurance procedures to be performed in a manner that shall not delay the Work.

PART 2 PRODUCTS (NOT USED)

PART 3 EXECUTION

3.01 GENERAL

A. The Contractor shall develop and maintain an inspection system and perform such inspections and tests as shall ensure that the Work conforms to the Contract Documents.

B. Maintain complete CQC records and make them available at all times to Owner and Engineer. One copy of all CQC documents and reports (exclusive of CQC Daily Reports, which are submitted daily and addressed elsewhere within this Specification) shall be transmitted to the Owner's Representative on a weekly basis, at an agreed to time. "Weekly" shall be construed as each transmittal containing 7 calendar days of reporting – including reports of no activity. The documents are subject to review and acceptance by the Owner's Representative, and each copy shall be legible and intelligible.

C. The Quality Control System as defined in paragraph 1.03.B, above, shall cover all construction and demolition operations, both onsite and offsite, including Work by subcontractors, fabricators, suppliers and purchasing agents, and shall be keyed to the proposed construction sequence.

3.02 COORDINATION MEETING

A. After the Preconstruction Conference, but before start of construction, and following submission of but prior to acceptance of the CQC Plan, schedule a meeting with Engineer and Owner to discuss the Quality Control System.

B. Develop a mutual understanding of the system details, including the forms for recording the CQC operations, control activities, testing, administration of the system for both onsite and offsite Work, and the interrelationship of Contractor's management and control with the Owner's Quality Assurance.

C. There may be occasions when subsequent conferences may be called by either party to reconfirm mutual understandings and/or address deficiencies in the CQC system or procedures that may require corrective action by Contractor.

3.03 QUALITY CONTROL ORGANIZATION

A. Quality Control System Manager:

1. Designate an individual within Contractor's organization who shall be responsible for overall management of CQC and have the authority to act in CQC matters for the Contractor.
2. The Owner retains the right to approve the appointment of the Quality Control System Manager, and to direct replacement of same during the course of the Work should their performance be deemed lacking in the express opinion of the Owner.
3. The Quality Control System (QCS) Manager shall be located onsite and shall not have or be assigned any additional responsibilities within the company, project, or other formal construction organization within the Contractor's business operation. The QCS Manager's sole responsibility shall be to oversee and implement the Quality Control Plan, which shall include oversight of the QC staff.
4. QCS Manager shall be an experienced construction person, with a minimum of 4 years' experience in supervising construction of similar type Work.
5. The QCS Manager shall report directly to an officer or principle within the company who is outside the project-specific organization and is responsible for quality assurance. The QCS Manager is not to be subordinate to or report to the Contractor's project manager or any supervisor within the Contractor's production organization.
6. QCS Manager shall be onsite during construction; periods of absence may not exceed 2 weeks at any one time.
7. Identify an alternate for QCS Manager to serve with full authority during the QCS Manager's absence. The requirements for the alternate shall be the same as for designated QCS Manager.

B. CQC Staff:

1. Designate a CQC staff, available at the Site at all times during progress, with complete authority to take any action necessary to ensure compliance with the Contract. This staff shall include those personnel involved with quality control of all products generated by the Contractor, be they administrative in nature (e.g., schedules, submittals, reports, etc.) or construction. CQC staff members shall be subject to acceptance by Engineer. The overall quality control organization shall be comprised of multiple personnel (commensurate with the amount of work being performed) knowledgeable of the construction industry and trade practices, and technically competent. Those involved with inspection and monitoring of construction activities shall be referred to as "Quality Control Representatives." Actual staffing for and implementation of the plan shall be the responsibility of the Contractor, but all staff assigned shall be reviewed and approved by Owner and Engineer on an on-going basis.

2. CQC staff shall take direction from QCS Manager in matters pertaining to QC.
3. A sufficient number of CQC staff with proper corresponding skills shall be appropriately assigned to ensure effective quality control of Work phases, work shifts, and work crews involved in the construction. These personnel may perform other duties, but shall be fully qualified by experience and technical training to perform their assigned QC responsibilities, and they shall be allowed sufficient time to carry out these responsibilities. The Contractor shall assign QC Representatives in accordance with the following requirements:
    a. Representatives shall be knowledgeable of the trade responsibility assigned.
    b. Representatives shall become thoroughly familiar with the construction requirements of the trade and areas assigned.
    c. An individual Representative shall be responsible for overseeing no more than $1,000,000 of construction-in-place per month (this includes the cost of equipment and equipment installation).
    d. The QC Representative position requires a minimum of 8 years' experience in construction of process/industrial facilities.
4. The actual number and related skills of members assigned to the CQC staff may vary during any specific Work period to cover the needs of the Project. Contractor shall assign additional staff when necessary for a proper CQC organization.

C. Organizational Changes: Obtain Engineer's acceptance before replacing any member of the CQC staff. Requests for changes shall include name, qualifications, duties, and responsibilities of the proposed replacement.

3.04 QUALITY CONTROL PHASING

A. CQC shall include at least three phases of control to be conducted by QCS Manager for all definable features of Work (DFOW), as follows:

1. Preparatory Phase:
    a. Notify Owner at least 48 hours in advance of beginning any of the required action of the preparatory phase.
    b. This phase shall include a meeting conducted by the QCS Manager and attended by the superintendent, other CQC personnel (as applicable), and the foreman responsible for the definable feature. The QCS Manager shall instruct applicable CQC staff as to the acceptable level of workmanship required in order to meet Contract requirements. The agenda for the meeting shall include confirmation of the items cited in subparagraph "d," below. The meeting shall be conducted no sooner than 3 weeks prior to the commencement of the respective work, and no later than 3 work days prior to commencement, unless as specifically authorized by the Owner's Representative.

c. Document the results of the preparatory phase meeting by separate minutes prepared by the QCS Manager. Minutes are to be published no more than 2 business days following the meeting.

d. Perform prior to beginning Work on each definable feature of Work:

1) Review applicable Contract Specifications.

2) Review applicable Contract Drawings.

3) Verify that all materials and/or equipment have been tested, submitted, and approved.

4) Verify that provisions have been made to provide required control inspection and testing.

5) Examine the Work area to verify that all required preliminary Work has been completed and is in compliance with the Contract.

6) Perform a physical examination of required materials, equipment, and sample Work to verify that they are on hand, conform to approved Shop Drawing or submitted data, and are properly stored.

7) Review the appropriate activity hazard analysis to verify safety requirements are met.

8) Review procedures for constructing the Work, including repetitive deficiencies.

9) Document construction tolerances and workmanship standards for that phase of the Work.

10) Check to verify that the plan for the Work to be performed, if so required, has been accepted by Engineer.

2. Initial Phase:

a. Accomplish at the beginning of a definable feature of Work:

1) Notify Owner at least 48 hours in advance of beginning the initial phase.

2) Perform prior to beginning Work on each definable feature of Work:

a) Review minutes of the preparatory meeting.
b) Check preliminary Work to verify compliance with Contract requirements.
c) Verify required control inspection and testing.
d) Establish level of workmanship and verify that it meets minimum acceptable workmanship standards. Comparison with sample panels is appropriate.
e) Resolve all differences.
f) Check safety to include compliance with and upgrading of the safety plan and activity hazard analysis. Review the activity analysis with each worker.

3) Separate minutes of this phase shall be prepared by the QCS Manager and published within 2 business days of the session. Exact location of initial phase shall be indicated for future reference and comparison with follow-up phases.

4) The initial phase should be repeated for each new crew to work onsite, or any time acceptable specified quality standards are not being met.

3. Follow-up Phase:

a. Implement the Construction Installation and Quality Plan (CIQP) for each corresponding DFOW. Perform daily checks to verify continuing compliance with Contract requirements, including control testing, until completion of the particular feature of Work.

b. Daily checks shall be made a matter of record in the CQC documentation and shall document specific results of inspections for all features of Work for the day or shift.

c. Conduct final follow-up checks and correct all deficiencies prior to the start of additional features of Work that shall be affected by the deficient Work. Constructing upon or concealing nonconforming Work shall not be allowed.

4. Additional Preparatory and Initial Phases: Additional preparatory and initial phases may be conducted on the same definable features of Work as determined by Owner if the quality of ongoing Work is unacceptable; or if there are changes in the applicable QC staff or in the onsite production supervision or work crew; or if work on a definable feature is resumed after a substantial period of inactivity, or if other problems develop.

3.05 CONTRACTOR QUALITY CONTROL PLAN

A. General:

1. Plan shall identify personnel, procedures, control, instructions, test, records, and forms to be used.

2. Construction shall be permitted to begin only after acceptance of the CQC Plan.

B. Content:

1. Plan shall cover the intended CQC organization for the entire Contract and shall include the following, as a minimum:

a. Definable Features of Work (DFOW): A list of the DFOW is included herein as an attachment to this Specification. The list may be altered to meet the Contractor's objectives, but only upon approval of the Engineer. The list is established to identify those areas that have been identified through the design phase of this project, and are cited for the Contractor's incorporation into their Quality Control Plan, and while deviation from this list may be acceptable, the Engineer shall be ensured that adequate quality

control procedures shall be instituted to embrace the quality management principles invoked under these contract documents.

b. Organization: Description of the quality control organization, including a chart showing lines of authority and acknowledgment that the CQC staff shall implement the three-phase control system (see Paragraph QC Phasing) for all aspects of the Work specified.

   1) The organization chart shall be kept current. As members or positions change within the organization, the chart is to be updated within 2 workdays.

   2) Accompanying the organization chart shall be a staffing schedule showing the staff and when the respective individuals are to be expected onsite. Should implementation of the construction plan and/or schedule change, the staffing schedule is to be revised to reflect both actual events and the revised forecast. These changes shall be documented in an updated staffing schedule to be submitted to the Engineer within 1 week of the acknowledged schedule change.

c. CQC Staff: The name, qualifications (in resume format), duties, responsibilities, and authorities of each person assigned a QC function.

d. Letters of Authority: A copy of a letter to the QCS Manager signed by an authorized official of the firm, describing the responsibilities and delegating sufficient authorities to adequately perform the functions of the QCS Manager, including authority to stop Work which is not in compliance with the Contract. The QCS Manager shall issue letters of direction to all other various quality control representatives outlining duties, authorities and responsibilities. Copies of these letters shall also be furnished to Owner.

e. Submittals: Procedures for scheduling, reviewing, certifying, and managing submittals, including those of subcontractors, offsite fabricators, suppliers and purchasing agents.

f. Testing: Control, verification and acceptance testing procedures for each specific test to include the test name, frequency, Specification paragraph containing the test requirements, the personnel and laboratory responsible for each type of test, and an estimate of the number of tests required.

g. Procedures for tracking preparatory, initial, and follow-up control phases and control, verification, and acceptance tests, including documentation.

h. Procedures for tracking deficiencies from identification through acceptable corrective action. These procedures shall establish verification that identified deficiencies have been corrected.

i. Reporting procedures, including proposed reporting formats; include a copy of the CQC report form.

j. Checklists: Checklists are to be developed and incorporated into the quality control process. These checklists serve as one of the bases

for hold point/witness point (Item n, below) reviews. Sample checklists are included herein as an attachment to this Specification.

k. As-built drawing management, including data and survey gathering procedures, QC checking, drawing format and conventions, and work and personnel scheduling.

l. Audit system, including schedule, structure, process, personnel, resources, and documentation.

m. Construction and Installation Quality Plans (CIQPs): CIQPs for Definable Features of Work (DFOW), as defined within the Contract Specifications and in collaboration with the Engineer, shall, as a minimum, include the following:

1) Construction quality management, inspection, and QC organization and responsibility, as well as identification of the Contractor's staff directly responsible for management, supervision, and compliance verification of the Works.

2) The specific methods of construction and/or installation that shall be followed together with an identification of the Contractor's method statements and risk-assessment requirements.

3) Surveying: Construction staking QC, including construction layout/alignment/staking proof of compliance and tolerances for field survey verification and a coordination and interface procedure between surveyors for the Contractor and Employer.

4) Quality hold points and/or witness points (paragraph n, below) in which each activity, component, or construction phase is subject to confirmation by the Owner’s Quality Assurance Representative that the quality control aspects for that element of work have been properly executed.

5) Environmental compliance and monitoring, including a monitoring schedule and environmental management documentation and records.

6) Identification of critical design/construction details and procedures for reconciliation of any issues with the Engineer.

7) Requirements and controls for any special processes.

8) Processes for verification of as-built information and incorporation of changes identified during construction.

n. Hold Points/Witness Points: Hold points and witness points are those events over the construction of the Work when the Owner’s Quality Assurance Representative is invited to observe, witness, or inspect the status of a particular element or aspect of a DFOW (e.g., pressure test, leak test, cast-in-place concrete wall form closure, etc.). Witness points and hold points shall be identified within the respective CIQP. A provision shall be made in each CIQP for the

Owner's Quality Assurance Representative to indicate requirements to monitor or witness any of the activities which make up the Work. Notwithstanding any other witness points that may be required by the CQC Plan or Engineer, a hold point shall be established in accordance with inspection requirements of the contract whenever the work is ready and before it is covered up or put out of sight. Notification to the Engineer of an upcoming hold point or witness point is required no less than 48 hours in advance of the event.

C. Acceptance of Plans: Acceptance of the Contractor's basic and addendum CQC plans is required prior to the start of construction. Acceptance is conditional and shall be predicated on satisfactory performance during the construction (refer to paragraph 1.03.B.3). Owner reserves the right to require Contractor to make changes in the CQC plan and operations including removal of personnel, as necessary, to obtain the quality specified.

D. Notification of Changes: After acceptance of the CQC plan, Contractor shall notify Engineer, in writing, a minimum of 7 calendar days prior to any proposed change. Proposed changes are subject to acceptance by Engineer.

3.06 CONTRACTOR QUALITY CONTROL REPORTS

A. Prepare a CQC report daily. Account for all calendar days throughout the life of the Contract. Reports shall be signed and dated by CQC System Manager. Include copies of test reports and copies of reports prepared by QC staff. The report shall be submitted no later than noon of the workday following the workday being reported. Days of no activity are to be reported on the next workday, and sequential days of no activity may be reported on one report (e.g., a weekend or holiday period wherein two or more consecutive days have no work activity). The report shall be submitted to the Engineer. Failure to be current with the Daily Quality Control Reports shall be cause for rejection of payment request(s).

1. The report shall be prepared in electronic format consistent with the document management procedures for the Project, and a .pdf file of the entire report, including attachments, shall be transmitted electronically to the Engineer. A printed version of the report shall be delivered to the Owner's Representative onsite.
2. Comments on disposition of the report shall be provided to the Contractor no later than 3:00 p.m. of the same day. Final reconciliation of the report shall be completed no later than 9:00 a.m. of the day following initial submission of the report.
3. The report content may be a summary statement by the QCS Manager with individual reports from QC Representatives attached thereto, along with other attachments, as necessary. The QCS Manager shall review and endorse each attachment submitted, be it a Daily Report by a QC Representative or a test report received from a testing agency.

B. Maintain current records of quality control operations, activities, and tests performed, including the Work of subcontractors and suppliers.

C. Reports shall be on a form approved by the Owner's Representative and shall be a complete description of inspections, the findings and any resultant actions of inspections, daily work/production activities, tests, and other items, including but not limited to the following:

1. Contractor/subcontractor and their areas of responsibility.
2. All operating plant/equipment onsite with hours worked, idle, or down for repair and designation as to whether the equipment is owned or rented/leased.
3. Work performed today, giving location, description, and by whom. When a network schedule is used, identify each phase of Work performed each day by activity number.
4. Test and/or control activities performed with results and references to specifications/plan requirements. The control phase shall be identified (Preparatory, Initial, Follow-up). List deficiencies noted along with corrective action.
5. Material received with statement as to its acceptability and storage.
6. Identify submittals reviewed, with Contract reference, by whom, and action taken.
7. Offsite surveillance activities, including actions taken.
8. Job safety evaluations stating what was checked, results, and instructions or corrective actions.
9. Address any quality issues identified and agreed to be reconciled by the Contractor without Engineer involvement.
10. Address any quality issues identified for response action by the Contractor that shall require some lead-time in resolving. Describe the plan of action and the target implementation date.
11. Address any quality issues identified and agreed to be reconciled by the Contractor which require Engineer involvement or endorsement of the proposed resolution.
12. Address any quality issues formally identified by the QC Representative with which the production supervisor is not in agreement with, and the corresponding proposed disposition by the CQC System Manager.
13. List any discussions that led to the conclusion that there is a conflict in Drawings and/or Specifications, and detail the corresponding conflict.
14. Indicate a description of trades working on the Project; the number of personnel working; if outside work is occurring, record weather conditions encountered (temperature, precipitation, humidity, wind) at 8:00 a.m., Noon, and 4:00 p.m., and any consequential changes thereto during the course of the day; and any delays encountered.
15. These records shall cover both conforming and deficient features and shall include a statement that equipment and materials incorporated in file work and workmanship comply with the Contract.

D. Non-Conformance Reports: Non-Conformance Reports shall be issued by the Engineer in the event there is a disagreement between the Contractor and Engineer regarding the quality of the constructed product and/or the conformance of a product or equipment item with regard to the Specification. Issuance of this report shall be construed as direction to the Contractor to remedy the situation pursuant to the recommendation of the Engineer. The Contractor shall respond to the report within the specified period, as noted in the report, with their plan to remedy the situation.

E. Monthly Quality Control Summary that addresses the following:

1. Certification by both the QCS Manager and Contractor Project Manager that all work not specifically cited by a Non-Conformance Report satisfies the requirements of the Contract Documents.
2. Summary table identifying all assigned CQC Representatives and their corresponding area of responsibility.
3. Summary table identifying all non-conformance notices and their respective current status.

3.07 SUBMITTAL QUALITY CONTROL

A. Submittals shall be as specified in Section 01 33 00, Submittal Procedures. The CQC organization shall be responsible for certifying that all submittals are in compliance with the Contract requirements. Owner will furnish copies of test report forms upon request by Contractor. Contractor may use other forms as approved.

3.08 TESTING QUALITY CONTROL

A. Testing Procedure:

1. Perform tests specified or required to verify that control measures are adequate to provide a product which conforms to Contract requirements. Procure services of a licensed testing laboratory. Perform the following activities and record the following data:
    a. Verify testing procedures comply with contract requirements.
    b. Verify facilities and testing equipment are available and comply with testing standards.
    c. Check test instrument calibration data against certified standards.
    d. Verify recording forms and test identification control number system, including all of the test documentation requirements, have been prepared.
    e. Documentation:
        1) Record results of all tests taken, both passing and failing, on the CQC report for the date taken.

2) Include Specification paragraph reference, location where tests were taken, and the sequential control number identifying the test.

3) Actual test reports may be submitted later, if approved by Engineer, with a reference to the test number and date taken.

4) Provide directly to Engineer an information copy of tests performed by an offsite or commercial test facility. Test results shall be signed by an engineer registered in the state where the tests are performed.

5) Failure to submit timely test reports, as stated, may result in nonpayment for related Work performed and disapproval of the test facility for this Contract.

B. Testing Laboratories: Laboratory facilities, including personnel and equipment, utilized for testing soils, concrete, asphalt and steel shall meet criteria detailed in ASTM D3740 and ASTM E329, and be accredited by the American Association of Laboratory Accreditation (AALA), National Institute of Standards and Technology (NIST), National Voluntary Laboratory Accreditation Program (NVLAP), the American Association of State Highway and Transportation Officials (AASHTO), or other approved national accreditation authority. Personnel performing concrete testing shall be certified by the American Concrete Institute (ACI).

3.09 COMPLETION INSPECTION

A. CQC System Manager shall conduct an inspection of the Work at the completion of all Work or any milestone established by a completion time stated in the Contract.

B. Punchlist:

1. QCS Manager shall develop a punchlist of items which do not conform to the Contract requirements.
2. Include punchlist in the CQC report, indicating the estimated date by which the deficiencies shall be corrected.
3. QCS Manager or staff shall make a second inspection to ascertain that all deficiencies have been corrected and so notify the Owner.
4. These inspections and any deficiency corrections required shall be accomplished within the time stated for completion of the entire Work or any particular increment thereof if the Project is divided into increments by separate completion dates.

3.10 CQC STAFF COMPLIANCE

A. In the event a position within the quality control organization is unfilled, or if in the sole and express opinion of the Owner the effectiveness of the Quality Control organization is inadequate, the Owner may choose to fill the functional position through alternative means and reduce the Contract amount accordingly for the Contractor's failure to satisfy the Contract requirements. The rates at which the Contract value shall be reduced are as follows:

1. Quality Control System Manager – $2,500/day.
2. Quality Control Representative – $2,200/day.

END OF SECTION

SECTION 01 45 36
EQUIPMENT SEISMIC CERTIFICATION

PART 1 GENERAL

1.01 SUMMARY

A. This section covers the code required seismic certification of mechanical and electrical equipment in accordance with **2018** IBC, Chapter 17.

1.02 REFERENCES

A. The following is a list of standards which may be referenced in this section:
   1. American Society of Civil Engineers (ASCE): 7, Minimum Design Loads for Buildings and Other Structures.
   2. Institute of Electrical and Electronics Engineers, Inc. (IEEE):
      a. 344, Recommended Practice for Seismic Qualification of Class 1E Equipment for Nuclear Power Generating Stations.
      b. 693, Recommended Practice for Seismic Design of Substations.
   3. International Code Council (ICC):
      a. International Building Code (IBC).
      b. Evaluation Service (ICC-ES) Reports and Legacy Reports.
   4. National Fire Protection Association (NFPA): 13, Standard for Installation of Sprinkler Systems.

1.03 DEFINITIONS

A. Agencies and Personnel:
   1. Approved Agency: An established and recognized agency regularly engaged in conducting tests or furnishing inspection services, when such agency has been approved.

B. Component Supports:
   1. Electrical: Structural members or assemblies which transmit loads and forces from electrical equipment to the structure, including braces, frames, legs, pedestals, and tethers, as well as elements forged or cast as part of component for anchorage.
   2. Mechanical: Structural members or assemblies which transmit loads and forces from mechanical equipment to the structure, including braces, frames, skirts, legs, saddles, pedestals, snubbers, and tethers, as well as elements forged or cast as part of component for anchorage.

1.04 SUBMITTALS

A. Informational Submittals:
   1. Seismic Qualification of Mechanical and Electrical Equipment Certification of Compliance: Submit for mechanical and electrical

components having a component importance factor of 1.5 as designated herein. Submit for other components having component importance factor of 1.0 where test results are submitted as an alternate to required calculations under **13.2.5 of ASCE 7-16**. Refer to Article Supplements located at end of section.

2. If required by Engineer, submit documentation of testing results or analytical data.

1.05 STATEMENT OF SPECIAL INSPECTIONS (PLAN) REQUIREMENTS

A. Complete special inspection and testing in accordance with Section 01 45 33, Special Inspection, Observation, and Testing.

B. Architectural, mechanical, and electrical components subject to special inspection and testing under IBC Section **1705.12** for seismic resistance, as listed in table in Article Mechanical and Electrical Component Certification are in addition to requirements of Section 01 45 33, Special Inspection, Observation, and Testing.

PART 2 PRODUCTS (NOT USED)

PART 3 EXECUTION

3.01 MECHANICAL AND ELECTRICAL COMPONENT CERTIFICATION

A. Provide certificate of compliance for mechanical and electrical component testing and certification on form located at end of section. Provide certificates for equipment and components listed in the following table:

Mechanical and Electrical Components Requiring Certification of Compliance for Seismic Testing or Analysis under IBC Section 1705.13.2		
Component	**Component Importance Factor, I_p**	**Component to Remain Operable?**
Fuel Oil Pumps	1.5	Yes
Fuel Oil Piping Support Systems	1.5	Yes
Cable Tray Supporting Systems	1.5	Yes
Control System and Networking Cabinets	1.5	Yes
Panel boards	1.5	Yes
AC induction motors	1.5	Yes
Fire Protection Equipment	1.5	Yes
Security System Components	1.5	Yes

B. Certify mechanical and electrical components listed in table above on basis of tests on a shaking table, by three-dimensional shock tests, by an analytical method using dynamic characteristics, and forces as provided in Section 01 88 15, Anchorage and Bracing, **experience data demonstrating**

acceptable seismic performance, or by more rigorous analysis. **Submitted testing and experience data shall meet requirements of ASCE 7 -16 Section 13.2.5 and Section 13.2.6, respectively.**

C. Component and attachment testing and certification shall be in accordance with applicable provisions of IBC **Section 1705.13.2**. Seismic testing and certification is in addition to functional and performance testing required for new equipment for field quality control or start-up testing as indicated in technical specification.

D. Where equipment is required to remain operable following the design earthquake ground motion, active parts or energized components shall be certified on basis of approved shake table testing or experience only unless demonstrably similar to other equipment so qualified.

E. Components with hazardous contents shall be certified to contain materials under the design earthquake.

3.02 SUPPLEMENTS

A. The supplement listed below, following "End of Section," is a part of this Specification:

1. Seismic Qualification of Mechanical and Electrical Equipment Certificate of Compliance.

END OF SECTION

SEISMIC QUALIFICATION OF MECHANICAL AND ELECTRICAL EQUIPMENT CERTIFICATE OF COMPLIANCE

(Component under Certification)	(Name of Manufacturer)
(Tag Number or Equipment ID)	(Business Address)
(Drawing/Detail Number)	(_____) (Telephone)

This is to certify that above-referenced component meets or exceeds requirements of Section **1705.13.2** of **2018** IBC for seismic qualification of equipment. Basis of qualification is by:

(Check Applicable)

☐ Shake-table Test

☐ Three-dimensional Shock Test

☐ Analytical Method

☐ Experience Data

☐ **Conformance with NFPA 13 and force and displacement requirements of Sections 13.3.1 and 13.3.2 of ASCE 7-16 for fire protection sprinkler systems.**

☐ Other _____

under acceptance criteria of:

☐ ICC-ES AC156, Acceptance Criteria for Seismic Qualification by Shake-Table Testing of Nonstructural Components and Systems

☐ IEEE 693, IEEE Recommended Practice for Seismic Design of Substations

☐ IEEE 344, IEEE Recommended Standard Practice for Seismic Qualification of Class 1E Equipment for Nuclear Power Generating Stations for experience data

☐ **ASCE 7-16 Chapter 13** for analytical methods

☐ Other _____

for the following earthquake hazard rating:

IEEE Seismic Qualification Level: _____

Mapped MCE, 5 Percent Damped, Short Period Spectral Response Acceleration, S_S: _____

Design, 5 Percent Damped, Short Period Spectral Response Acceleration, S_{DS}: _____

Component Importance Factor, I_p: _____

Component Response Modification Factor, R_p: _____

Height of Point of Attachment as Factor of Average Roof Height, z/h: _____

This certification covers both the integrity of the equipment and anchorage of equipment. Required mounting and anchorage details are shown on attached Seismic Outline Drawing for the most seismically vulnerable component covered by this certification.

Manufacturer's Representative Signature: _____

Address: _____

Date: _____

END OF SECTION

INTENTIONALLY LEFT BLANK

SECTION 01 50 00
TEMPORARY FACILITIES AND CONTROLS

PART 1 GENERAL

1.01 REFERENCES

A. The following is a list of standards which may be referenced in this section:

1. American Nursery and Landscape Association (ANLA): American Standards for Nursery Stock.
2. Federal Emergency Management Agency (FEMA).
3. National Fire Prevention Association (NFPA): 241, Standard for Safeguarding Construction, Alteration, and Demolition Operations.
4. Telecommunications Industry Association (TIA): 568-C, Commercial Building Telecommunications Cabling Standard.
5. U.S. Department of Agriculture (USDA): Urban Hydrology for Small Watersheds.
6. U.S. Weather Bureau: Rainfall-Frequency Atlas of the U.S. for Durations from 30 Minutes to 24 Hours and Return Periods from 1 to 100 Years.

1.02 SUBMITTALS

A. Informational Submittals: Copies of permits and approvals for construction as required by Laws and Regulations and governing agencies.

1.03 MOBILIZATION

A. Mobilization shall include, but not be limited to, these principal items:

1. Obtaining required permits.
2. Moving Contractor’s field office and equipment required for first month operations onto Site.
3. Installing temporary construction power, wiring, and lighting facilities.
4. Providing onsite communication facilities, including telephones.
5. Providing onsite sanitary facilities and potable water facilities as specified and as required by Laws and Regulations, and governing agencies.
6. Arranging for and erection of Contractor’s work and storage yard.
7. Posting OSHA required notices and establishing safety programs and procedures.
8. Having Contractor’s superintendent at Site full time.

B. Areas are limited for Contractor’s temporary facilities and material/equipment laydown. Available areas for laydown shall be discussed at the Contract pre-bid

conference. The Owner will provide information to the Contractor the areas that are available for its use.

1.04 PROTECTION OF WORK AND PROPERTY

A. Comply with Owner's safety rules while on Owner's property.

B. Keep Owner informed of serious onsite accidents and related claims.

C. Use of Explosives: No blasting or use of explosives shall be allowed onsite.

PART 2 PRODUCTS

2.01 PROJECT SIGN

A. A project sign is not required for this Contract. If one is provided, the sign shall include the name of the Project, Owner, Contractor, Engineer, and other participating agencies and its location shall be approved by the Owner.

PART 3 EXECUTION

3.01 TEMPORARY UTILITIES

A. Power:

1. Make arrangements to obtain and pay for electrical power used until final payment and acceptance by Owner, unless otherwise recommended by Engineer at Substantial Completion.
2. Cost of electric power shall be borne by Contractor.

B. Lighting: Provide temporary lighting to meet applicable safety requirements to allow erection, application, or installation of materials and equipment, and observation or inspection of the Work.

C. Water:

1. Make arrangements for and bear costs of providing water required for construction purposes and for drinking by construction personnel during construction.
2. Water used by the Contractor at the jobsite shall be furnished by the Owner at a cost to the Contractor. The Contractor shall review the "Sewerage and Water Board of New Orleans Hydrant Meter Installation for non-potable (Standard) and Potable (Special Festival) Water Use' Policy and Procedure. These documents are available on the Sewerage and Water Board's Web site.
3. Contractor shall complete a hydrant meter application for construction projects at each location. Every six month the hydrant meter shall be turned over to the Sewerage and Water Board Meter Shop for recalibration. At the end of the construction project the hydrant meter shall be returned to the

Sewerage and Water Board Meter Shop or otherwise the deposit shall not be returned.

4. Connections to fire hydrants shall only be made with meters obtained from the Sewerage and Water Board Customer Service Department which shall record water usage for record purposes and which shall be returned to the Sewerage and Water Board as condition of acceptance of the Contract. Application for the meter requires a $1,500 deposit that is refundable upon return of the meter in undamaged and operable condition.
5. Contractor shall be responsible for the provision of water, electricity, drainage, sanitary sewage disposal, gas, compressed air, and any other utility service required to perform the Work of the Contract.

D. Sanitary and Personnel Facilities:

1. Provide and maintain facilities for Contractor's employees, Subcontractors, and other onsite employers' employees. Service, clean, and maintain facilities and enclosures.
2. Use of Owner's existing sanitary facilities by construction personnel shall not be allowed.

E. Telephone Service:

1. Contractor: Arrange and provide onsite telephone service for use during construction. Pay costs of installation and monthly bills.
2. No incoming calls allowed to Owner's plant telephone system.

F. Fire Protection: Furnish and maintain on Site adequate firefighting equipment capable of extinguishing incipient fires. Comply with applicable parts of NFPA 241.

3.02 PROTECTION OF WORK AND PROPERTY

A. General:

1. Maintain in continuous service existing oil and gas pipelines, underground power, telephone or communication cable, water mains, irrigation lines, sewers, poles and overhead power, and other utilities encountered along and within lines of the Work, unless other arrangements satisfactory to owners of said utilities have been made.
2. Where completion of the Work requires temporary or permanent removal or relocation of existing utility, coordinate activities with owner of said utility and perform work to their satisfaction.
3. Protect, shore, brace, support, and maintain underground pipes, conduits, drains, and other underground utility construction uncovered or otherwise affected by construction operations.
4. Keep fire hydrants and water control valves free from obstruction and available for use at all times.

5. In areas where Contractor's operations are adjacent to or near a utility, such as gas, telephone, television, electric power, water, sewer, or irrigation system, and such operations may cause damage or inconvenience, suspend operations until arrangements necessary for protection have been made by Contractor.
6. Notify Owner when it may be affected by construction operation at least 2 days in advance: Before exposing a utility, obtain utility owner's permission. Should service of utility be interrupted due to Contractor's operation, notify proper authority immediately. Cooperate with said authority in restoring service as promptly as possible and bear costs incurred.
7. Do not impair operation of existing sewer system. Prevent construction material, pavement, concrete, earth, volatile and corrosive wastes, and other debris from entering sewers, pump stations, or other sewer structures.
8. Maintain original Site drainage wherever possible.
9. No residence or business shall be cut off from vehicular traffic for a period exceeding 1 hour, unless special arrangements have been made.

B. Site Security: Provide and maintain temporary security fences as necessary to protect the Work and Contractor-furnished products not yet installed.

C. Barricades and Lights:

1. Provide as required by the State Vehicle Code and in sufficient quantity to safeguard public and the Work.
2. Provide as necessary to prevent unauthorized entry to construction areas and affected roads, streets, and alleyways, inside and outside of fenced area, and as required to ensure public safety and the safety of Contractor's employees, other employer's employees, and others who may be affected by the Work.
3. Provide to protect existing facilities and adjacent properties from potential damage.
4. Locate to enable access by facility operators and property owners.
5. Protect streets, roads, highways, and other public thoroughfares that are closed to traffic by effective barricades with acceptable warning signs.
6. Locate barricades at the nearest intersecting public thoroughfare on each side of blocked section.
7. Illuminate barricades and obstructions with warning lights from sunset to sunrise.

D. Trees and Plantings:

1. Protect from damage and preserve trees, shrubs, and other plants outside limits of the Work and within limits of the Work.
    a. Where practical, tunnel beneath trees when on or near line of trench.
    b. Employ hand excavation as necessary to prevent tree injury.

c. Do not stockpile materials or permit traffic within drip lines of trees.
d. Provide and maintain temporary barricades around trees.
e. Water vegetation as necessary to maintain health.
f. Cover temporarily exposed roots with wet burlap, and keep burlap moist until soil is replaced around roots.
g. No trees, except those specifically shown on the Drawings to be removed, shall be removed without written approval of Engineer.
h. Dispose of removed trees in a legal manner off the Site.

2. Balling and burlapping of trees indicated for replacement shall conform to recommended specifications set forth in the American Standards for Nursery Stock, published by American Nursery and Landscape Association. Balls shall be firm and intact and made-balls shall not be accepted. Handle ball and burlap trees by ball and not by top.
3. In event of damage to bark, trunks, limbs, or roots of plants that are not designated for removal, treat damage by corrective pruning, bark tracing, application of a heavy coating of tree paint, and other accepted horticultural and tree surgery practices.
4. Replace each plant that dies as a result of construction activities.

E. Existing Structures:

1. Where Contractor contemplates removal of small structures such as mailboxes, signposts, and culverts that interfere with Contractor's operations, obtain approval of property owner and Engineer.
2. Move mailboxes to temporary locations accessible to postal service.
3. Replace items removed in their original location and a condition equal to or better than original.

F. Finished Construction: Protect finished floors and concrete floors exposed as well as those covered with composition tile or other applied surfacing.

G. Waterways: Keep ditches, culverts, and natural drainages continuously free of construction materials and debris.

H. Dewatering: Construct, maintain, and operate cofferdams, channels, flume drains, sumps, pumps, or other temporary diversion and protection works. Furnish materials required, install, maintain, and operate necessary pumping and other equipment for the environmentally safe removal and disposal of water from the various parts of the Work. Maintain foundations and parts of the Work free from water.

I. Endangered and Threatened Species:

1. Take precautions necessary and prudent to protect native endangered and threatened flora and fauna. No endangered species are known to be present at CWP.

2. Notify Engineer of construction activities that might threaten endangered and threatened species or their habitats.
3. Engineer will mark areas known as habitats of endangered and threatened species prior to commencement of onsite activities.
4. Additional areas will be marked by Engineer as other habitats of endangered and threatened species become known during construction.

3.03 TEMPORARY CONTROLS

A. Air Pollution Control:

1. Minimize air pollution from construction operations.
2. Burning of waste materials, rubbish, or other debris shall not be permitted on or adjacent to Site.
3. Conduct operations of dumping rock and of carrying rock away in trucks to cause a minimum of dust. Give unpaved streets, roads, detours, or haul roads used in construction area a dust-preventive treatment or periodically water to prevent dust. Strictly adhere to applicable environmental regulations for dust prevention.
4. Provide and maintain temporary dust-tight partitions, bulkheads, or other protective devices during construction to permit normal operation of existing facilities. Construct partitions of plywood, insulating board, plastic sheets, or similar material. Construct partitions in such a manner that dust and dirt from demolition and cutting shall not enter other parts of existing building or facilities. Remove temporary partitions as soon as need no longer exists.

B. Water Pollution Control:

1. Divert sanitary sewage and non-storm waste flow interfering with construction and requiring diversion to sanitary sewers. Do not cause or permit action to occur which would cause an overflow to existing waterway.
2. Prior to commencing excavation and construction, obtain Engineer's agreement with detailed plans showing procedures intended to handle and dispose of sewage, groundwater, and dewatering pump discharges.
3. Comply with Section 01 57 13, Temporary Erosion and Sedimentation Control, for stormwater flow and surface runoff.
4. Do not dispose of volatile wastes such as mineral spirits, oil, chemicals, or paint thinner in storm or sanitary drains. Disposal of wastes into streams or waterways is prohibited. Provide acceptable containers for collection and disposal of waste materials, debris, and rubbish.

C. Erosion, Sediment, and Flood Control: Provide, maintain, and operate temporary facilities as specified in Section 01 57 13, Temporary Erosion and Sedimentation Control, to control erosion and sediment releases, and to protect the Work and existing facilities from flooding during construction period.

3.04 STORAGE YARDS AND BUILDINGS

A. Coordinate requirements with Section 01 61 00, Common Product Requirements.

B. Temporary Storage Yards: Construct temporary storage yards for storage of products that are not subject to damage by weather conditions.

C. Temporary Storage Buildings:

1. Provide environmental control systems that meet recommendations of manufacturers of equipment and materials stored.
2. Arrange or partition to provide security of contents and ready access for inspection and inventory.
3. Store combustible materials (paints, solvents, fuels) in a well-ventilated and remote building meeting safety standards.

3.05 ACCESS ROADS AND DETOURS

A. Utilize existing plant access roads and within easements, rights-of-way, or Project limits. Utilize existing roads where possible. If necessary to provide new access routes, alignments for new routes shall be approved by Engineer.

B. Maintain drainage ways. Install and maintain culverts to allow water to flow beneath access roads. Provide corrosion-resistant culvert pipe of adequate strength to resist construction loads.

C. Provide gravel, crushed rock, or other stabilization material to permit access by all motor vehicles at all times.

D. Maintain road grade and crown to eliminate potholes, rutting, and other irregularities that restrict access.

E. Coordinate with Engineer detours and other operations affecting traffic and access. Provide at least 72 hours' notice to Engineer of operations that will alter access to Site.

F. Upon completion of construction, restore ground surface disturbed by access road construction to original grade. Replace damaged or broken culverts with new culvert pipe of same diameter and material.

3.06 PARKING AREAS

A. Control vehicular parking to preclude interference with public traffic or parking, access by emergency vehicles, Owner's operations, or construction operations.

B. Provide parking facilities for personnel working on Project. No employee or equipment parking shall be permitted on Owner's existing paved areas except as specifically designated for Contractor's use. Available areas for Contractor parking

will be discussed at the Contract pre-bid conference. The Owner will provide instructions to the Contractor the areas that are available for its use.

3.07 VEHICULAR TRAFFIC

A. Vehicular traffic allowed on site shall be limited to Contractor management.

B. Comply with Laws and Regulations regarding closing or restricting use of public streets or highways. No public or private road shall be closed, except by written permission of proper authority. Ensure the least possible obstruction to traffic and normal commercial pursuits.

C. Conduct the Work to interfere as little as possible with public travel, whether vehicular or pedestrian.

D. Whenever it is necessary to cross, close, or obstruct roads, driveways, and walks, whether public or private, provide and maintain suitable and safe bridges, detours, or other temporary expedients for accommodation of public and private travel.

E. Notify fire department and police department before closing street or portion thereof. Notify said departments when streets are again passable for emergency vehicles. Do not block off emergency vehicle access to consecutive arterial crossings or dead-end streets, in excess of 300 linear feet, without written permission from fire department. Conduct operations with the least interference to fire equipment access, and at no time prevent such access. Furnish Contractor's night emergency telephone numbers to police department.

3.08 CLEANING DURING CONSTRUCTION

A. In accordance with General Conditions, as may be specified in other Specification sections, and as required herein.

B. Wet down exterior surfaces prior to sweeping to prevent blowing of dust and debris. At least weekly, sweep floors (basins, tunnels, platforms, walkways, roof surfaces), and pick up and dispose of debris.

C. Provide approved containers for collection and disposal of waste materials, debris, and rubbish. At least weekly, dispose of such waste materials, debris, and rubbish offsite.

D. At least weekly, brush sweep entry drive, roadways, and other streets and walkways affected by the Work and where adjacent to the Work.

END OF SECTION

SECTION 01 57 13
TEMPORARY EROSION AND SEDIMENT CONTROL

PART 1 GENERAL

1.01 SUMMARY OF WORK

A. This section covers Work necessary for stabilization of soil to prevent erosion during demolition and construction and land disturbing activities. Engineer reserves right to modify use, location, and quantities of soil erosion and sediment control measures based on activities of Contractor. This shall include installation, maintenance, and final removal of all temporary soil erosion and sediment control measures and installation of permanent soil erosion control practices.

B. Demolition and construction sites shall install and maintain Best Management Practices (BMP's) in accordance with City Ordinance Section 103.17 Construction or Demolition Privileges and Section 103.18 Demolition Requirements and submit Stormwater Pollution Prevention Plan (SPPP) as required by the Sewerage and Water Board of New Orleans (S&WB).

1.02 REFERENCES

A. The following is a list of standards, which may be referenced in this section:

1. ASTM International (ASTM):
   a. D638, Standard Test Method for Tensile Properties of Plastics.
   b. D3776/D3776M, Standard Test Methods for Mass Per Unit Area (Weight) of Fabric.
   c. D4355, Standard Test Method for Deterioration of Geotextiles by Exposure to Light, Moisture and Heat in Xenon Arc Type Apparatus.
   d. D4632, Standard Test Method for Grab Breaking Load and Elongation of Geotextiles.
2. Federal Emergency Management Agency (FEMA).
3. Louisiana SWBNO of Environmental Quality (LDEQ):
   a. Stormwater information may be found on LDEQ's website under Divisions, Water Permits, LPDES Permits, Stormwater Information.
   b. Stormwater General Permits for Construction Activities.
4. Sewerage and Water Board of New Orleans (S&WB): Stormwater Management Plan (SWMP).
5. Louisiana Department of Transportation and Development (LADOTD) EC-01, Temporary Erosion Control Details.
6. U.S. SWBNO of Agriculture: Urban Hydrology for Small Watersheds; Soil Conservation Service Engineering Technical Release No. 55, 1986.

7. U.S. Environmental Protection Agency:
    a. Guidelines for Erosion and Sedimentation Control Planning.
    b. Stormwater Pollution Prevention Plan Development Guidance for Construction Sites.
    c. Implementation, Processes, Procedures, and Methods to Control Pollution Resulting from all Construction Activity.
    d. Erosion and Sediment Control Surface Mining in Eastern United States.
8. U.S. Weather Bureau: Rainfall Frequency Atlas of the United States for Durations from 30 Minutes to 24 Hours and Return Periods from 1 to 100 Years, Technical Paper No. 40, 1981.

1.03 SYSTEM DESCRIPTION

A. Erosion, Sediment, and Flood Control: Provide, maintain, and operate temporary facilities to control erosion and sediment releases, and to protect the Work and existing facilities from flooding during construction period.

B. Soil erosion stabilization and sedimentation control consists of the following elements:
    1. Construction and maintenance of permanent and temporary storm drainage piping and channel systems, as necessary.
    2. Construction of temporary erosion control facilities such as silt fences and check dams.
    3. Placement and maintenance of temporary seeding on areas disturbed by construction.

C. Activities shall conform to the SPPP.

1.04 SUBMITTALS

A. Informational Submittals:
    1. Construction Site Compliance Requirements:
        a. Demolition/construction sites between 1 and 5 acres: Contractor shall submit an LDEQ Stormwater General Permit (LAR 200000).
    2. Schedule for installation of drainage, erosion, and sedimentation control measures.
    3. Method for placement of soil stabilization seed and additives.

1.05 QUALITY ASSURANCE

A. Water pollution control shall comply with laws, rules, and regulations of the State of Louisiana and agencies of the United States Government prohibiting the pollution of lakes, wetlands, streams, or river waters from the dumping of contaminates, refuse, rubbish, or debris.

B. Contractor shall comply with procedures outlined in U.S. Environmental Protection Agency manuals entitled, "Guidelines for Erosion and Sedimentation Control Planning" and "Implementation, Processes, Procedures, and Methods to Control Pollution Resulting from all Construction Activity".

PART 2 PRODUCTS

2.01 MATERIALS

A. BMP materials, including silt fences, clearing limit fences, soil stabilization seed, straw mulch, and straw bales shall be in accordance with LDEQ and EPA BMP guidelines.

PART 3 EXECUTION

3.01 PREPARATION

A. Contractor shall be responsible for phasing Work in areas allocated for their exclusive use during Project, including proposed stockpile areas and installation of temporary erosion control devices, ditches, or other facilities.

B. Areas set aside for Contractor's use during Project may be temporarily developed to provide satisfactory working, staging, and administrative areas. Preparation of these areas shall be in accordance with other requirements contained within Specifications and completed in a manner to control sediment transport away from area.

3.02 INSTALLATION

A. Install BMP measures in accordance with manufacturer recommendations and LDEQ and EPA BMP guidelines.

B. Silt Fence:

1. Install prior to starting earth disturbing activities.
2. Construct in accordance with manufacturer's instructions.
3. Install geotextile in one piece, or continuously sewn to make one piece, for full length and height of fence, including portion of geotextile buried in toe trench. Take precaution not to puncture geotextile during installation.
4. Install bottom edge of sheet in toe trench and backfill in a way that securely anchors geotextile in trench.
5. Securely fasten geotextile to each support post in a way that shall not result in tearing of geotextile when fence is subjected to service loads.
6. When joints are necessary, splice geotextile together only at support post, with a minimum 6-inch overlap, and securely fasten both ends to support post.
7. Geotextile shall not extend more than 34 inches above ground surface. Securely fasten to upslope side of each support post using ties. Do not staple geotextile to existing trees.

8. Remove after upslope area has been permanently stabilized.

C. Clearing Fence Limit:

1. Before beginning clearing and grubbing operations, install at limits of clearing.
2. Drive posts a minimum of 18 inches into ground at maximum spacing of 6 feet.
3. Remove after permanent stabilization is complete and accepted by Engineer.

D. Seeding:

1. Schedules:
   a. Perform seeding in accordance with the following schedule:
      1) Summer Seeding: Between March 15 and June 15, or September 1 to November 15.
      2) Winter Seeding: Other times of year, except when weather conditions prohibit further construction operations as determined by Engineer.
2. Soil Stabilization Seeding:
   a. Consists of application of the following materials in quantities as further described herein for stockpiles and disturbed areas left inactive for more than 14 days.
      1) Fertilizer
      2) Seed
      3) Mulch
      4) Maintenance
   b. Hydroseeding is acceptable method of applying seed and associated soil conditioning agents described above.
   c. Place and maintain over disturbed areas. Maintain until such time as areas are approved for permanent seeding. As a minimum, maintenance shall include the following:
      1) Fix up and reseeding of bare areas or redisturbed areas.
      2) Mowing stands of grass or weeds exceeding 6 inches in height.

E. Soil Stockpiles:

1. Protect from erosion with super silt fence.
2. Seed stockpile, not active for 14 days, with soil stabilization seed, surrounded by super silt fence and a permanent 2-foot minimum depth perimeter ditch located within 10 feet of the toe of stockpile slope.
3. Sediment transport and erosion from working stockpiles shall be controlled and restricted from moving beyond immediate stockpile area by construction of temporary toe-of-slope ditches and accompanying silt

fences, as necessary. Keep these temporary facilities in operational condition by regular cleaning, regrading, and maintenance.

F. Straw Bales:

1. Embed minimum of 4 inches in flat-bottom trench.
2. Place with ends tightly abutting or overlapped. Corner abutment is not acceptable.
3. Install in order that bale bindings are oriented around sides and not over top and bottom of bale.
4. Use two posts for each bale. Drive posts through bale until top of post is flush with top of bale.
5. Wedge loose straws in gaps between bales.

3.03 FIELD QUALITY CONTROL

A. Conduct inspections jointly with Engineer every 2 weeks to evaluate conformance to requirements of Specifications.

B. Replace or repair failed or overloaded silt fences, check dams, or other temporary erosion control devices within 2 days after site inspections or after receiving written notice from Engineer.

3.04 MAINTENANCE

A. Promptly repair or replace silt fence that becomes damaged.

B. Provide and maintain soil stabilization seeding at all times.

C. Silt Traps:

1. Clean silt traps of collected sediment after every storm or as determined from biweekly inspections.
2. Perform cleaning in a manner that shall not direct sediment into storm drain piping system.
3. Take removed sediment to area selected by Engineer where it can be cleaned of sticks and debris, then allowed to dry.
4. Dispose of final sediment onsite as designated by Engineer.
5. Dispose of debris offsite.

D. Regrade unpaved earth drainage ditches as needed to maintain original grade and remove sediment buildup. If ditch becomes difficult to maintain, install additional erosion control devices such as check dams, temporary paving, or silt fences as directed by Engineer.

E. Inspect, repair, and replace as necessary erosion control measures during the time period from start of construction to completion of construction.

3.05 CLEANING

A. Dress sediment deposits remaining after fence has been removed to conform to existing grade. Prepare and seed graded area.

3.06 REMOVAL

A. When Engineer determines that an erosion control BMP is no longer required, remove BMP and all associated hardware from the Project limits. When materials are biodegradable, Engineer may approve leaving temporary BMP in place.

B. Permanently stabilize all bare and disturbed soil after removal of erosion and sediment control BMPs. Dress sediment deposits remaining after BMPs have been removed to conform to existing grade. Prepare and seed graded area. If installation and use of erosion control BMPs have compacted or otherwise rendered soil inhospitable to plant growth, such as construction entrances, take measures to rehabilitate soil to facilitate plant growth. This may include, but is not limited to, ripping the soil, incorporating soil amendments, or seeding with specified seed.

END OF SECTION

INTENTIONALLY LEFT BLANK

SECTION 01 11 01
PROJECT SUMMARY OF WORK

PART 1 GENERAL

1.00 BRAND SPECIFICATIONS

A. Substitute and "Or-Equal" Items: Please note that LA R.S. 38§2295 requires the following be included in plans and specifications:
(1) *"The name of a certain brand, make, manufacturer, or definite specifications is to denote the quality of standard of the article desired, but does not restrict bidders to the specific brand, make, manufacturer, or specification named. It is to set forth and convey to prospective bidders the general style, type, character, and quality of the article desired".*
(2) *"When in specifications or contract documents a particular brand, make of material, device, or equipment is shown or specified, such brand, make of material, device, or equipment shall be regarded merely as a standard."*

B. *"When in specifications or contract documents an architect or engineer specifies a particular brand, make of material, device, or equipment, or equal thereto, he shall adequately identify said product by including, minimally, the model or catalog number of the product."*

C. *"If a potential supplier wishes to submit for prior approval a particular product other than a product specified in the contract documents, he shall do so no later than seven working days prior to the opening of bids. Within three days, exclusive of holidays and weekends, after such submission, the prime design professional shall furnish to both the public entity and the potential supplier written approval or denial of the product submitted.*

1.01 PROJECT BACKGROUND

A. The Carrollton Water Treatment Plant (CWTP) provides purified drinking water for Orleans Parish east of the Mississippi River. The entrance to this connected building complex is located on Eagle Street, which is accessed from South Claiborne Avenue.

B. Power to the CWTP is provided by the co-located CWTP power plant, which consists of power generators and local utility feeds located within a group of connected buildings that serve as a building complex. For power resiliency, a new 230-kV substation and a new West Power Complex (WPC) is to be installed at the CWTP.

C. Within the CWTP, existing basins C7 and C8 have been repurposed to prepare the basins for the new WPC and Entergy 230-kV Sullivan substation. The C7 and C8 basins have been repurposed under a separate contract and the work is complete.

D. The WPC consists of a new combustion turbine generator (CTG), space for two future CTG's, new static frequency converters (SFC) to convert 60-Hz power to 25-Hz power, a new Operations Center (OPS), new balance of plant (BOP) equipment to support the major equipment of the WPC, a new Utility Rack to

B. UNIT Index: The UNIT Index lists SWBNO defined units.

C. SYSTEM Index: The SYSTEM Index lists SWBNO defined systems.

D. TYPE Index: The TYPE Index lists SWBNO defined equipment types.

1.03 COORDINATION WITH OTHER REQUIREMENTS

A. It is important to recognize that this Specification section is not a stand-alone document that defines all requirements for Project Equipment Identification. These requirements shall be used in conjunction with equipment specific specifications and/or Project Documents. Equipment specific specifications and/or Project Documents shall continue to utilize the universal equipment tag format/structure but may further define specific tag elements unique to the application.

1.04 GENERAL REQUIREMENTS

A. The range of process numbers to be used for Contractor equipment shall be confirmed with Owner/Engineer prior to development of Contractor's P&ID's.

B. A nameplate schedule shall be developed for integration into the Project Master Tag Registry.

C. Provide nameplates for each instrument, transformer, light, meter, switch, control, terminal strip, panel mounted component (including fuses), fuse blocks, timers, relays, auxiliary relays, conduits and raceways, etc., in accordance with a nameplate schedule. Color coding shall be used for equipment and functional identification.

D. Nameplates shall be corrosion resistant metal for items exposed to process or other severe conditions, or laminated two-ply plastic (white face to black core) with legend/text engraved to black core for items such as electrical and control panels which are not exposed to process conditions.

E. Emergency nameplates and warning labels shall be phenolic, corrosion resistant, laminated, two-ply composition (red face to white core) with legend/text engraved to white core.

F. Characters shall be uniform block style not smaller than 1/2 inch for switchgear sections, switching devices, and panelboards, and not smaller than 1/4 inch for instrument transformers, relays, alarms, instruments, and control devices.

G. Nameplates and tags shall be provided for all valves, steam traps and other equipment. Label all piping.

H. Nameplates shall be secured using No. 4-36 RH nickel-plated brass machine screws or attached to each tagged item with a stainless steel wire.

I. All items listed on the Bill of Materials shall be identified by assigned tag numbers and fully described by manufacturer, type and model numbers as applicable.

J. All parts, components, assemblies and items shall be clearly and permanently match-marked for field assembly and installation. The match-marks shall be marked by letters or numbers and shall be cross referenced to the shipping paperwork and erection drawings and instructions.

K. Corrosion resistant metal nameplates shall be attached at easily accessible locations for all equipment and components. The name plates shall be stamped with the information required by the applicable Code and shall also include the Contractor's name, Contractor's serial number, and equipment tag number.

1.05 MAJOR EQUIPMENT MASTER NAMEPLATE

A. Each major piece of equipment shall have a master nameplate securely affixed showing the tag number; the name and address of the Manufacturer; serial and model number; and such other information as the Contractor may consider necessary to complete the identification of the item.

PART 2 PRODUCTS (NOT USED)

PART 3 EXECUTION

3.01 GENERAL

A. Equipment supply schedules and construction sequencing is extremely important for this Project. An overall equipment supply schedule is required for incorporation in the overall project construction schedule.

END OF SECTION

INTENTIONALLY LEFT BLANK

SECTION 01 61 00
COMMON PRODUCT REQUIREMENTS

PART 1 GENERAL

1.01 DEFINITIONS

A. Owner or SWBNO refers to Sewerage and Water Board of New Orleans.

B. Engineer or Owner's Engineer refers to the entity or individual who is to act as the Engineer-of Record under the oversight and administration of the Owner. The term Engineer may refer to a third-party Engineering Firm or a (SWBNO) department or individual..

C. Contractor refers to any and all individuals, companies, or entities performing design, procurement, and/or construction activities related to the demolition, installation, excavation, startup, testing and commissioning of equipment, structures, or systems as required by the Contract documents.

D. Supplier, Vendor, or Seller may refer to the Contractor, the Contractor's Sub-Contractor or Supplier, a packager, OEM, manufacturer or manufacturer's representative, or other entity, depending on the context. Any Contract requirements of the Supplier, Vendor, or Seller shall ultimately be the responsibility of the Contractor.

E. Commissioning Agent/Representative is an independent entity that is responsible for the commissioning of the Work, and shall be the responsibility of the Contractor.

F. Drawings: Drawings includes all technical drawings and documentation used to define the system (or systems) and equipment specified herein or in other Sections for the Work.

G. Products:

1. New items for incorporation in the Work, whether purchased by Contractor or Owner for the Project, or taken from previously purchased stock, and may also include existing materials or components required for reuse.
2. Includes the terms material, equipment, machinery, components, subsystem, system, hardware, software, and terms of similar intent and is not intended to change meaning of such other terms used in Contract Documents, as those terms are self-explanatory and have well recognized meanings in construction industry.
3. Items identified by manufacturer's product name, including make or model designation, indicated in manufacturer's published product literature, that is current as of the date of the Contract Documents.

1.02 PROJECT ACRONYMS

ANSI American National Standards Institute

ASA	Acoustical Society of America
ASCE	American Society of Civil Engineers
ASME	American Society of Mechanical Engineers
ASTM	American Society for Testing and Materials
ATC	Air Throat Connection
AWG	American Wire Gauge
AWS	American Welding Society
BOP	Balance of Plant
BPVC	Boiler Pressure Vessel Code
CENELEC	European Committee for Electrotechnical Standardization
CFR	Code of Federal Regulations
CPT	Control Power Transformer
CT	Current Transformer
CTG	Combustion Turbine Generator
DIN	Deutsches Institut für Normung e.V. (German Institute for Standardization)
ECS	Electrical Control System
EMC	Electromagnetic Compatibility
EN	European Standard
ESO	European Standardization Organization
FO	Fiber Optic
HMGP	Hazard Mitigation Grant Program
ICEA	Insulated Cable Engineers Association
IEC	International Electrotechnical Commission
IEEE	Institute of Electrical and Electronics Engineers
IGBT	Insulated-Gate Bipolar Transistor
kCMIL	(kilo = 1,000) Circular Mils
kg	kilogram
kV	Kilovolt
kVA	Kilovolt-Ampere
kW	Kilowatt
MV	Medium Voltage
MVA	Megavolt-Ampere
MW	Megawatt
NEHRP	National Earthquake Hazards Reduction Program
NEMA	National Electrical Manufacturers Association
NESC	National Electrical Safety Code
NEC	National Electrical Code
NFPA	National Fire Protection Association

PCS	Plant Control System
PDCS	Power Distribution Control System
PF	Power Factor
PLC	Programmable Logic Controller
PT	Potential Transformer
R	Resistance
RMS	Root Mean Square
RIV	Radio Influence Voltage
RTAC	Real-Time Automation Controller
RTU	Remote Terminal Unit
SA	Surge Arrester
SCADA	Supervisory Control and Data Acquisition
SFC	Static Frequency Converter
SWB	Sewerage & Water Board
SWBNO	Sewerage & Water Board of New Orleans
SWC	Surge Withstand Capability
THD	Total Harmonic Distortion
UL	(formerly known as Underwriters Laboratory)
V	Volt
VAC	Volts (Alternating Current)
VAR	Volt-Amp Reactance
VDC	Volts (Direct Current)
X	Reactance (Capacitive or Inductive)
XFMR	Transformer
Z	Impedance

1.03 DESIGN REQUIREMENTS

A. Where Contractor design is specified, design of installation, systems, equipment, and components, including supports and anchorage, shall be in accordance with provisions of 2021 International Building Code (IBC) by International Code Council.

B. Contractor shall plan and perform work in accordance with these site conditions:

1. Temperature and Precipitation:

Parameter	**Value and Unit**
Temperature and Humidity:	
Mean annual dry bulb (DB) temperature	68.6 degrees F

Parameter	Value and Unit
Mean annual wet bulb (WB) temperature	63.3 degrees F
Mean summer dry bulb (DB) temperature	80.9 degrees F
Mean summer wet bulb (WB) temperature	74.9 degrees F
Mean winter season dry bulb (DB) temperature	56.7 degrees F
Mean winter season wet bulb (WB) temperature	52.6 degrees F
Mean Barometric Pressure	14.609 psia
Plant Elevation	4 feet above sea level
Design Conditions:	
Indoor Design Temperature (DB) for Equipment Design	122 degrees F
Design low temperature (DB) for Equipment Design	12 degrees F
Summer Ambient Design Conditions	97.0 degrees F, 54.2 percent RH
Precipitation and Snow:	
Average monthly rain fall	5.2 inches
Average annual rain fall	62.44 inches
Highest average monthly rain fall	6.77 inches (June and September)
100-year, 1-hour rainfall	9.75 inches
Snow fall annual average	0 inches

2. Wind Speeds:
   a. Structures shall be designed for wind loads in accordance with ASCE 7-16 for Orleans Parish and the following parameters:

Parameter	Value and Unit
Ultimate Design Wind Speed	157 MPH
Exposure Category	C
Risk Category	IV Essential Facility per Table 1604.5

b. The following USGS Wind Rose Diagram is from New Orleans, LA.

1) Mean Wind Speeds:

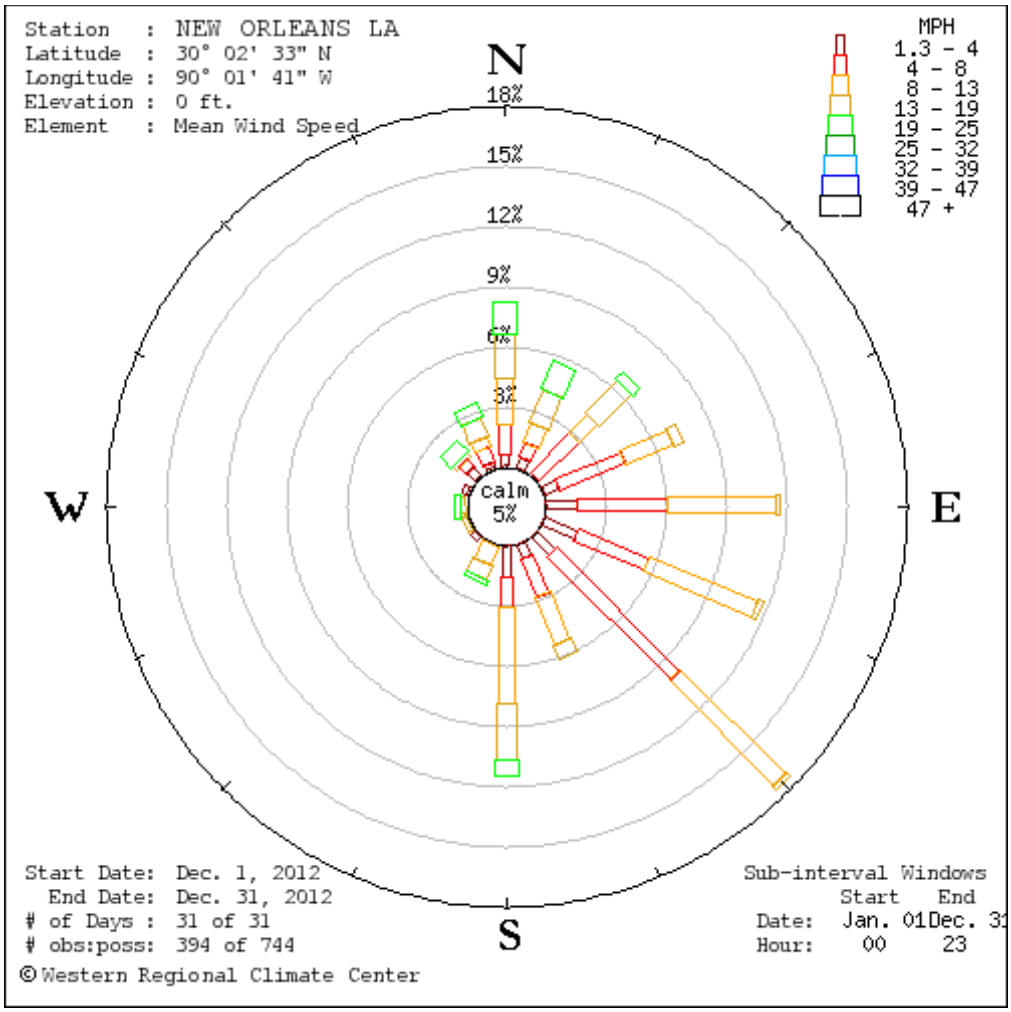

2) Maximum Wind Speeds:

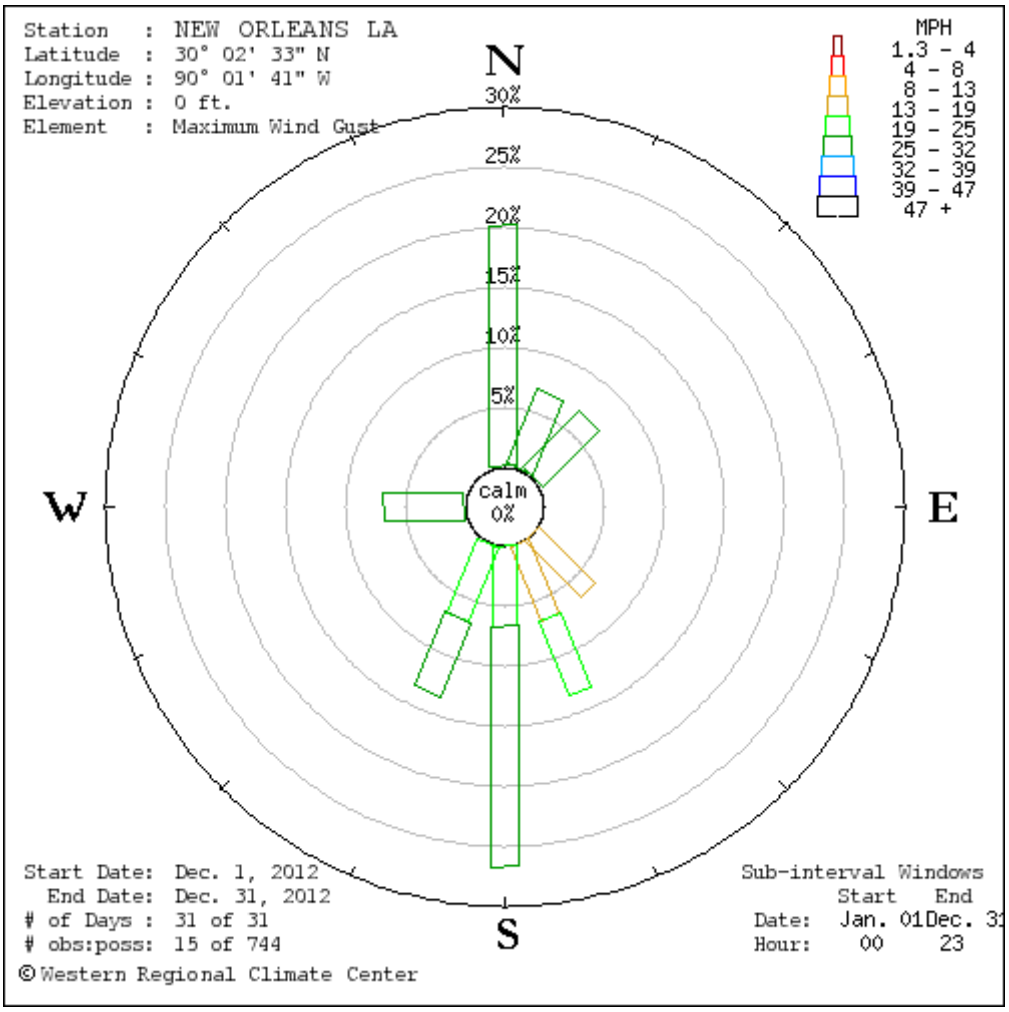

1.04 SEISMIC DESIGN CRITERIA

A. Structures shall be designed for seismic loads in accordance with the ASCE 7-16 for Orleans Parish and the following parameters:

Parameter	Value and Unit
Site soil Class	E
Seismic Design Category	D
Importance Factor (IE)	1.5
Risk Category	IV Essential Facility per Table 1604.5
SS	0.086g
S1	0.053g
S_{DS}	0.137g
S_{D1}	0.149g

1.05 PREPARATION FOR SHIPMENT

A. For factory assembled products, mark or tag separate parts and assemblies to facilitate field assembly. Cover machined and unpainted parts that may be damaged by the elements with strippable protective coating.

B. Package products to facilitate handling and protect from damage during shipping, handling, and outdoor storage. Mark or tag outside of each package or crate to indicate its purchase order number, bill of lading number, contents by name, name of Project and Contractor, equipment number, and approximate weight. Include complete packing list and bill of materials with each shipment.

C. Extra Materials, Special Tools, Test Equipment, and Expendables:

1. Furnish as required by individual Specifications.
2. Schedule:
    a. Ensure that shipment and delivery occurs concurrent with shipment of associated equipment.
    b. Transfer to Owner shall occur immediately subsequent to Contractor's acceptance of equipment from it's Supplier.
3. Packaging and Shipment:
    a. Package and ship extra materials and special tools to avoid damage during long term outdoor storage in original cartons insofar as possible, or in appropriately sized, hinged-cover, wood, plastic, or metal box.
    b. Prominently displayed on each package, the following:
        1) Manufacturer's part nomenclature and number, consistent with Operation and Maintenance Manual identification system.
        2) Applicable equipment description.
        3) Quantity of parts in package.
        4) Equipment manufacturer.
4. Deliver materials to Site.
5. Notify Owner upon arrival for transfer of materials.
6. Replace extra materials and special tools found to be damaged or otherwise inoperable at time of transfer to Owner.

D. Request a minimum 7-day advance notice of shipment from manufacturer.

E. Factory Test Results: Shall be reviewed and accepted by Engineer before product shipment as required in individual Specification sections.

1.06 DELIVERY AND INSPECTION

A. Deliver products in accordance with accepted current Progress Schedule and coordinate to avoid conflict with the Work and conditions at Site. Deliver anchor bolts and templates sufficiently early to permit setting prior to placement of structural concrete.

B. Deliver products in undamaged condition, in manufacturer's original container or packaging, with identifying labels intact and legible. Include on label, date of manufacture and shelf life, where applicable.

C. Unload products in accordance with manufacturer's instructions for unloading or as specified. Record receipt of products at Site. Promptly inspect for completeness and evidence of damage during shipment. Contractor shall notify Owner and Engineer immediately of any damage.

D. After notification to Owner and Engineer, and after Owner's authorization, remove damaged products from Site and expedite delivery of identical new undamaged products, and remedy incomplete or lost products to provide that specified, so as not to delay progress of the Work.

1.07 HANDLING, STORAGE, AND PROTECTION

A. Handle and store products in accordance with manufacturer's written instructions and in a manner to prevent damage. Store in approved storage yards or sheds. Provide manufacturer's recommended maintenance during storage, installation, and until products are accepted for use by Owner.

B. Manufacturer's instructions for material requiring special handling, storage, or protection shall be provided prior to delivery of material.

C. Arrange storage in a manner to provide easy access for inspection. Make periodic inspections (as specified by the Supplier's written instructions) of stored products to ensure that products are maintained under specified conditions, and free from damage or deterioration. Keep running account of products in storage to facilitate inspection and to estimate progress payments for products delivered, but not installed in the Work.

D. Store electrical, instrumentation, and control products, and equipment with bearings in weather-tight structures maintained above 60 degrees F. Protect electrical, instrumentation, and control products, and insulate against moisture, water, and dust damage. Connect and operate continuously space heaters furnished in electrical equipment.

E. Store fabricated products above ground on blocking or skids and prevent soiling or staining. Store loose granular materials in well-drained area on solid surface to prevent mixing with foreign matter. Cover products that are subject to deterioration with impervious sheet coverings; provide adequate ventilation to avoid condensation.

F. Store finished products that are ready for installation in dry and well-ventilated areas. Do not subject to extreme changes in temperature or humidity.

G. After installation, provide coverings to protect products from damage due to traffic and construction operations. Remove coverings/protection when scope is completed and accepted by Owner/Engineer.

H. Hazardous Materials: Prevent contamination of personnel, storage area, and Site. Meet requirements of product specification, codes, and manufacturer's instructions.

PART 2 PRODUCTS

2.01 GENERAL

A. Provide manufacturer's standard materials suitable for service conditions, unless otherwise specified in the individual Specifications.

B. Where product specifications include a named manufacturer, with or without model number, and also include performance requirements, named manufacturer's products shall meet the performance specifications.

C. Like items of products furnished and installed in the Work shall be end products of one manufacturer and of the same series or family of models to achieve standardization for appearance, operation and maintenance, spare parts and replacement, manufacturer's services, and implement same or similar process instrumentation and control functions in same or similar manner.

D. Do not use materials and equipment removed from existing premises, except as specifically permitted by Contract Documents.

E. Provide interchangeable components of the same manufacturer, for similar components, unless otherwise specified.

F. Equipment, Components, Systems, and Subsystems: Design and manufacture with due regard for health and safety of operation, maintenance, and accessibility, durability of parts, and shall comply with applicable OSHA, state, and local health and safety regulations.

G. Regulatory Requirement: Coating materials shall meet federal, state, and local requirements limiting the emission of volatile organic compounds and for worker exposure.

H. Safety Guards: Provide for all belt or chain drives, fan blades, couplings, or other moving or rotary parts. Cover rotating part on all sides. Design for easy installation and removal. Use 16-gauge or heavier; galvanized steel, aluminum coated steel, or galvanized or aluminum coated 1/2-inch mesh expanded steel. Provide galvanized steel accessories and supports, including bolts. For outdoors application, prevent entrance of rain and dripping water.

I. Authority Having Jurisdiction (AHJ):

1. Provide the Work in accordance with NFPA 70, National Electrical Code (NEC). Where required by the AHJ, material and equipment shall be labeled or listed by a nationally recognized testing laboratory or other organization acceptable to the AHJ in order to provide a basis for approval under NEC.

2. Materials and equipment manufactured within the scope of standards published by Underwriters Laboratories, Inc. shall conform to those standards and shall have an applied UL listing mark.

J. Equipment Finish:

1. Provide manufacturer's standard finish and color, except where specific color is indicated.
2. If manufacturer has no standard color, provide equipment with finish as approved by Owner.

K. Special Tools and Accessories: Furnish to Owner, upon acceptance of equipment, all accessories required to place each item of equipment in full operation. These accessory items include, but are not limited to, adequate oil and grease (as required for first lubrication of equipment after field testing), light bulbs, fuses, hydrant wrenches, valve keys, handwheels, chain operators, special tools, and other spare parts as required for maintenance.

L. Lubricant: Provide initial lubricant recommended by equipment manufacturer in sufficient quantity to fill lubricant reservoirs and to replace consumption during testing, startup, and operation until final acceptance by Owner.

M. Components and Materials in Contact with Water for Human Consumption: Comply with the requirements of the Safe Drinking Water Act and other applicable federal, state, and local requirements. Provide certification by manufacturer or an accredited certification organization recognized by the Authority Having Jurisdiction that components and materials comply with the maximum lead content standard in accordance with NSF/ANSI 61 and NSF/ANSI 372.

N. Use or reuse of components and materials without a traceable certification is prohibited.

2.02 FABRICATION AND MANUFACTURE

A. General:

1. Manufacture parts to U.S.A. standard sizes and gauges.
2. Two or more items of the same type shall be identical, by the same manufacturer, and interchangeable.
3. Design structural members for anticipated shock and vibratory loads.
4. Use 1/4-inch minimum thickness for steel that will be submerged, wholly or partially, during normal operation.
5. Modify standard products as necessary to meet performance specifications.

B. Lubrication System:

1. Require no more than weekly attention during continuous operation.

2. Convenient and accessible; oil drains with bronze or stainless steel valves and fill-plugs easily accessible from the normal operating area or platform. Locate drains to allow convenient collection of oil during oil changes without removing equipment from its installed position.
3. Provide constant-level oilers or oil level indicators for oil lubrication systems.
4. For grease type bearings, which are not easily accessible, provide and install stainless steel tubing; protect and extend tubing to convenient location with suitable grease fitting.

2.03 SOURCE QUALITY CONTROL

A. Where Specifications call for factory testing to be witnessed by Owner or Engineer, notify Owner and Engineer not less than 14 days prior to scheduled test date, unless otherwise specified.

B. Calibration Instruments: Bear the seal of a reputable laboratory certifying instrument has been calibrated within the previous 12 months to a standard endorsed by the National Institute of Standards and Technology (NIST).

C. Factory Tests: Perform in accordance with accepted test procedures and document successful completion.

PART 3 EXECUTION

3.01 INSPECTION

A. Inspect materials and equipment for signs of pitting, rust decay, or other deleterious effects of storage. Do not install material or equipment showing such effects. Notify Owner and Engineer, remove damaged material or equipment from the Site and expedite delivery of identical new material or equipment. Delays to the Work resulting from material or equipment damage that necessitates procurement of new products shall be considered delays within Contractor's control.

3.02 MANUFACTURER'S CERTIFICATE OF COMPLIANCE

A. When so specified, a Manufacturer's Certificate of Compliance, a copy of which is attached to this section, shall be completed in full, signed by entity supplying the product, material, or service, and submitted prior to shipment of product or material or execution of the services.

B. Engineer may permit use of certain materials or assemblies prior to sampling and testing if accompanied by accepted certification of compliance.

C. Such form shall certify proposed product, material, or service complies with that specified. Attach supporting reference data, affidavits, and certifications as appropriate.

D. May reflect recent or previous test results on material or product, if acceptable to Engineer.

3.03 INSTALLATION

A. Equipment Drawings show general locations of equipment, devices, and raceway, unless specifically dimensioned.

B. No shimming between machined surfaces is allowed.

C. Install the Work in accordance with NECA Standard of Installation, unless otherwise specified.

D. Repaint painted surfaces that are damaged prior to equipment acceptance.

E. Do not cut or notch any structural member or building surface without specific approval of Engineer.

F. Handle, install, connect, clean, condition, and adjust products in accordance with manufacturer's instructions, and as may be specified. Retain a copy of manufacturers' instructions at Site, available for review at all times.

G. For material and equipment specifically indicated or specified to be reused in the Work:

1. Use special care in removal, handling, storage, and reinstallation to assure proper function in the completed Work.
2. Arrange for transportation, storage, and handling of products that require offsite storage, restoration, or renovation. Include costs for such Work in the Contract Price.

3.04 FIELD FINISHING

A. In accordance with individual Specification sections.

3.05 ADJUSTMENT AND CLEANING

A. Perform required adjustments, tests, operation checks, and other startup activities.

3.06 LUBRICANTS

A. Fill lubricant reservoirs and replace consumption during testing, startup, and operation prior to acceptance of equipment by Owner.

3.07 SUPPLEMENTS

A. The supplement listed below, following "END OF SECTION", is part of this Specification.

1. Form: Manufacturer's Certificate of Compliance.

END OF SECTION

INTENTIONALLY LEFT BLANK

MANUFACTURER'S CERTIFICATE OF COMPLIANCE

OWNER: _____

PROJECT NAME: _____

PROJECT NO: _____

PRODUCT, MATERIAL, OR SERVICE SUBMITTED: _____

Comments: _____

_____

_____

_____

_____

_____

I hereby certify that the above-referenced product, material, or service called for by the Contract for the named Project shall be furnished in accordance with all applicable requirements. I further certify that the product, material, or service are of the quality specified and conform in all respects with the Contract requirements, and are in the quantity shown.

Date of Execution: _____, 20___

Manufacturer: _____

Manufacturer's Authorized Representative *(print)*: _____

_____

(Authorized Signature)

INTENTIONALLY LEFT BLANK

SECTION 01 73 20
MECHANICAL EQUIPMENT INSTALLATION

PART 1 GENERAL

1.01 SUMMARY

A. This section of the Specification defines the mechanical fuel oil pump systems erection and installation requirements for Contractor installed equipment and systems. These requirements are supplemental to the specific system erection/installation requirements delineated in the equipment manufacturer's installation requirements.

B. Any conflict between the system erection/installation requirements or the manufacturer's installation requirements and the requirements of this section shall be referred to the Owner for resolution prior to beginning the Work.

C. Any deviation(s) shall be requested by the Contractor in writing; the Owner will review requests and render a decision.

D. Furnished by the Contractor:

1. Receive, unload, inspect, document, store in Contractors laydown area, remove from storage and set in place, provide environmental protection and fully install all Contractor provided equipment.
2. The Contractor shall assume care, custody and control of all equipment until the equipment has been accepted by the Owner.
3. The Contractor shall furnish all labor, materials, equipment, rigging and services necessary to perform all mechanical equipment installation/erection required in accordance with the Drawings, manufacturer’s instructions, and this Specification.
4. The Contractor shall furnish all supervision, labor, equipment, tools, etc. to the extent necessary during preliminary operation and startup period to make all adjustments, alignments, leveling, inspections, and tests of rotating equipment and to correct problems discovered during startup and preliminary operation.
5. Pre-operational checkout including preparation of equipment for testing, operation, cleaning, and flushing of fuel oil lines.

1.02 QUALITY ASSURANCE/CONTROL

A. The Contractor shall have an effective QC program to ensure the requirements of the Contract Documents and Specifications are complied with. The Contractor shall submit his QC program to the Owner prior to commencing Work.

B. The program shall assure that required procedures are prepared and implemented, required test/measurements are made, referenced codes and standards are available for use, personnel are trained and qualified to perform the specified task as required. Deviations/defects shall be identified and corrected in compliance with QC program requirements, and that materials are procured, handled and shipped in compliance with the Contract.

C. The Contractor is subject to audits, inspections and witnessing by the Owner to ensure compliance with the requirements of the Specification, codes and standards, Drawings and Owner approved submittals. The Owner's exercise of, or failure to exercise, his right to inspect, witness, or audit, and any subsequent approval by the Owner, shall not relieve the Contractor of his obligation to comply with the terms/conditions of the contract. Any request for approval of deviations or nonconformances to the Contract Documents shall be processed in accordance with the Specification.

D. The Contractor shall provide at least one person who shall be responsible for the direction of the work being performed. They shall be present at the jobsite during all working hours. The individual(s) shall be thoroughly familiar with the work being performed and the requirements of this Specification. The individual shall have the authority to direct the work and shall be responsible to the Owner for the quality of the work.

E. The Contractor shall promptly document and notify the Owner of all deviations and nonconformance's to this Specification, Drawings, referenced documents, or Owner documents approved by the Owner. No deviation or nonconformance from these Documents shall be binding until approved by the Owner.

F. Contractor's work shall conform to the applicable requirements of governing codes, standards, publications of the agencies referenced herein and to all federal, state, and local codes or regulations having jurisdiction. All references to these publications are to the latest edition of each, together with the latest additions and/or amendments thereto, as of the date of the contract, unless otherwise specified.

G. Contractor shall provide an Inspection and Test Plan (ITP) that identifies those inspections and tests to be performed. The ITP shall be provided to the Owner for inclusion of inspection points identified by the Owner.

1.03 SUBMITTALS

A. Documentation shall be submitted in accordance with the Section 01 33 00, Submittal Procedures. In addition, Contractor shall submit all completed installation testing documents.

1.04 CLEANUP

A. During execution of the work, the Contractor shall continuously remove surplus materials, rubbish, and debris resulting from the operations under this Specification, including equipment and implements of service, and leave the structures and site, insofar as the Work of this Specification is concerned in a neat, clean, and acceptable condition. All rubbish and debris from construction activities shall be removed and disposed of daily off-site in a lawful manner.

PART 2 PRODUCTS

2.01 DRAWINGS

A. The Contractor shall install all equipment in accordance with this Specification and as shown on the Drawings and such other Drawings as may hereafter be furnished or approved by Owner to explain the work in greater detail.

B. In case the Contractor finds any discrepancy, errors, omissions or conflicts between the Contract, other documents and the Drawings, the Contractor shall refer the matter to Owner immediately for clarification.

C. Any changes, additions, or deletions shall be made only with written approval or instructions of the Owner. A separate, complete, and accurate as-built file of Contractor's and manufacturers' drawings shall be maintained by the Contractor, using prints of latest issues marked to show all subsequent data, approved deviations, and critical locations determined during the course of construction. This as-built file shall be kept up to date throughout the project on a current basis, and all changes shall reference the appropriate change requested and approval. Red Line drawings shall be sent to the Owner periodically to ensure that changes to equipment, piping, Drawings, etc., are communicated. The complete as-built file shall be turned over to the Owner at the end of the Project.

2.02 TESTING RECORDS

A. The Contractor shall provide records for all testing performed. Records shall include but not limited to:

1. System Pipe Hanger Checklist.
2. Line Pressure Test Pre Test Checklist.
3. Line Pressure Test Certification.

4. Piping Equipment Painting/Insulation Release/Return.
5. Post Pressure Test Checklist.
6. System Flush Report.
7. Equipment Grout Release Return.
8. Mechanical Equipment First Run Checklist.
9. Relief Valve Inspection and Acceptance.
10. Mechanical Equipment Lubrication.
11. Mechanical Equipment Pre Turnover Maintenance.
12. Equipment Spare Parts Turnover.
13. Piping Pre-Heat records.
14. Piping Post Weld Heat-treat records.
15. NDE X-Ray, PT and etc.
16. Plant Performance Test Reports.

PART 3 EXECUTION

3.01 EQUIPMENT DELIVERY

A. Contractor shall be responsible for the equipment and materials under this Specification to be unloaded and/or erected from the time of its arrival at the site, until the Work is accepted in its entirety by Owner, except during such time as said equipment or materials are removed from the control of Contractor by specific instructions of Owner. If the equipment or materials arrive at the site after the award of Contract, but before the arrival of Contractor on the jobsite, Contractor shall be fully responsible for making arrangements to unload and handle equipment and material and shall have complete responsibility for the equipment or materials while they are being unloaded and handled.

B. Contractor shall unload and store the equipment as it arrives at the jobsite in areas assigned by Owner, and shall properly protect and maintain the equipment in accordance with the manufacturer's instructions and good engineering practice.

C. Contractor shall be responsible for proper maintenance and environmental protection of equipment while in storage, during erection, and after erection until acceptance by Owner.

D. Upon arrival of the equipment and materials at the project, Contractor shall ensure that each seal on equipment connections and piping ends is intact. If cap, plug, or other type of seal is missing upon arrival of the equipment or material, it shall be cleaned immediately of all foreign materials and resealed. Contractor shall maintain seals during the course of the work, except where otherwise necessary.

E. During the storage period, all stored material and equipment shall be periodically inspected for tightness of seals.

F. Station equipment and material stored out of doors shall be protected against dirt and inclement weather conditions; Contractor shall furnish all temporary material for such protection.

G. Contractor shall unload and store all spare parts, spare supplies, and maintenance tools furnished with the equipment, as directed by Owner. Maintenance tools shall not be used for the erection of equipment.

3.02 PREOPERATIONAL MAINTENANCE

A. Provisions shall be made for the maintenance of equipment installed by the Contractor during periods of storage, erection and lay-up prior to being turned over to the Owner. Such maintenance shall be performed in strict accordance with the manufacturer's instructions or recommendations and in accordance with the additional requirements herein.

B. Equipment may be furnished with temporary protective coatings and/or lubricants for storage as recommended by the manufacturer.

C. The Contractor shall remove all temporary exterior/interior protective coatings prior to installation and shall thoroughly flush out all temporary lubricants from equipment prior to installation of permanent lubricants.

D. Contractor shall prepare written schedules for all routines required by the OEM and Owner documents, and record date, time, and describe the service or activity performed, and shall be submitted to the Owner. Any non-conforming result shall be brought to the Owner’s attention immediately for resolution.

E. Mechanical Equipment Shaft Rotation: Except where specifically stated otherwise in the manufacturer's instructions, all assembled rotating equipment shall have the main shaft rotated several turns in the direction of normal rotation only, once each week until turned over to Owner. The degree of rotation shall be such that the bearing areas receive a coating of lubricant, and so that the shaft does not come to rest where previously stopped. Minimum rotation shall be 450 degrees from starting position. Pipe wrenches or other tools which could mar the shaft surface shall not be used to rotate equipment.

F. The Contractor shall maintain and protect all motors for all equipment that is installed.

G. When practical, and the installation location is sufficiently weather tight, motors shall be stored at their permanent locations. Wherever stored, protection, maintenance, and periodic inspection procedures meeting the requirements of the motor manufacturer’s instructions shall be used. In the absence of motor manufacturer’s specific instructions, motor heaters shall be connected to a temporary power supply and energized. Before work for motor

heaters begins, Contractor shall notify/ consult Owner for power supply location, access, lock-out tag-out, and other procedures as required.

H. Contractor shall erect all temporary barricades that may be required and/or as directed by Owner. All such barricades shall be arranged so as to ensure the safety of personnel. Contractor shall remove such protection at the completion of the Work.

I. The Owner shall be notified whenever discontinuance of pre-operational maintenance or protection of equipment is proposed.

J. Contractor shall adequately prepare all of the equipment to withstand any possible damage or loss due to rough handling or exposure to weather during transit or extended outdoor storage. Where required by nature of the equipment, Contractor shall furnish and install necessary covers and other measures to protect the equipment from rain, hail, wind, dust, humidity, etc. Flanges and openings shall be adequately sealed and protected during shipment to prevent corrosion, entrance of foreign matter and possible damage from rough handling during transit and storage. Flanged connections shall be provided with suitable flange protectors bolted on before shipment. Screwed connections shall be provided with plugs. Lifting and support points shall be clearly identified. Equipment shall be protected against freezing damage that could result from the presence of residual water.

K. All weld preparation, flanged faces, other machined surfaces, and protruding parts shall be adequately protected against accidental damage and corrosion during transit and/or storage. Protective covers and braces shall be securely fastened to prevent displacement during transit.

3.03 EQUIPMENT ERECTION/INSTALLATION

A. General:

1. All mechanical equipment installed by the Contractor shall be located as shown on the Drawings. If during the erection, the Contractor identifies an area where the location of the equipment disturbs clearance requirements for normal or periodic maintenance operations, the matter shall be referred to the Owner.
2. Weather protection shall be provided (by Contractor), where required, to permit the continuance of erection or installation, whether within the confines of the permanent enclosure or outside.
3. When erection work covered herein includes field assembly of furnished components, parts or appurtenances and their support structures, the same applicable documents that governed their design and manufacture shall govern the field assembly.
4. All erection and installation work shall be in strict accordance with the manufacturer’s instructions or recommendations, Drawings and this Specification. All deficiencies in Contractor's workmanship that do not

meet the manufacturer's requirements shall be Contractor's responsibility.

5. Equipment installation manuals that are provided by manufacturers shall be available at the jobsite and shall be strictly followed unless directed otherwise by the Owner.
6. Contractor shall at all times prevent the accumulation on Owner's premises of debris caused by the Work. When necessary, in the opinion of the Owner or upon completion of the Work, Contractor shall remove from the premises all such debris, all work and materials condemned by Owner, and its tools, scaffolding and surplus materials, and shall leave the premises in good order and condition.
7. At all times, Contractor shall prevent unnecessary accumulation or scattering of materials, tools, or equipment around the premises, and shall conduct the Work in an orderly manner. In cases where Contractor fails to comply with the above provisions, within 24 hours after written notification to do so by the Owner, or in cases of disputes, the Owner shall have the right to remove debris, tools, scaffolding, and surplus materials and to charge the cost of such removal, and/or repairs to Contractor, or charge pro rata to the various Contractors engaged in the Work who, in the opinion of Owner, are responsible for cleanup costs. Charges for cleanup costs to Contractor shall be made by Owner's issuance of an amendment to the Contract, which shall apply as a credit on the contract price.
8. Equipment shall be kept clean at all times. In addition, immediately before each closure, the Contractor shall inspect the equipment interior and completely remove all debris and foreign material from the parts being joined or enclosed. The Contractor shall notify the Owner 48-hours prior to final closure of equipment to allow for Owner inspection.
9. When recommended by the equipment manufacturer, bearings shall be flushed clean with flushing fluid to the degree specified by the manufacturer. All flushing fluid shall be furnished by the Contractor and used in strict accordance with the equipment manufacturer's recommendations.
10. Work areas shall be maintained clean on a daily basis as the work progresses. When the work is finished, all waste materials including bearing flushing oil, paints, solvents, etc. shall be removed from the work areas. All work shall be left free and clear from all obstructions and hindrances.
11. If specified by the manufacturer, pump and other equipment shaft seals and packing shall be removed prior to initial setting of such equipment in order to prevent shaft damage. Shaft seals and packing shall be reinstalled and tightened in accordance with the manufacturer's recommendations.
12. The Contractor shall set and align (or re-align as needed) each piece of rotating equipment, its driver, and any intermediate coupling or connections. Final alignment readings are to be documented in the presence of the Owner's Representative and shall be signed and submitted to the Owner.

13. Prior to placing equipment, the Contractor shall inspect the surfaces of all foundations, anchor bolts, equipment, etc., to assure satisfactory initial setting of the equipment. Condition of these components prior to equipment placement is subject to Owner approval. Contractor shall verify proper rotation of all small motors. Any issues identified shall be reported to the Owner's Representative for resolution.
14. The equipment shall be oriented, located, shimmed, leveled and aligned to design dimensions before drawing up anchor bolts. Bolt tension shall be accurately controlled to the tolerances specified by the equipment manufacturer.
15. Torquing procedures and equipment shall be in accordance with the manufacturer's procedures to ensure full compliance with stress limitations.
16. Before setting any rotating equipment, all couplings, spacers and connectors shall be removed or disconnected. This is not applicable to skid mounted equipment where a single power supply is provided. After tightening equipment hold down bolts and before completion of any piping or duct connections, the drive units shall be aligned to the manufacturer's tolerances. An alignment check shall be made following the completion of any and all piping and/or duct connections. After drive rotation has been checked, all couplings shall be assembled for start-up and run-in operations. All motors shall set on a minimum of 0.125 inches of shim material to facilitate future realignment.
17. Grating:
    a. During the course of installation, it may be necessary to remove grating from stairwells or floors or hatches to facilitate the removal or installation of equipment. This could also be necessary for access modifications. In all cases, the affected portion shall be protected from personnel entry until the grating is replaced and welded or fastened back in place by a qualified welder.
    b. Barricades are the recommend method to preclude personnel entry until such time as the replacement and securing of grating is complete.
18. Contractor shall verify loads from base of temporary supports are properly distributed to concrete pads or steel members as applicable.

B. Contractor's work and related documentation shall be subject to inspection and acceptance by Owner.

C. New and revised systems shall be tested as required. Refer to Section 01 91 14, Equipment Testing and Facility Startup for requirements.

D. Foundation Preparation:

1. Concrete foundations shall be bush hammered and cleaned of all loose or unsound material and dirt prior to setting, shimming and grouting of equipment, bases, separate bearing plates, structural steel and support steel.

2. The Contractor shall verify, just prior to setting of plates, structural steel, support steel or equipment that all surfaces that are to receive grout or topping are clean and free of all material which might inhibit maximum bond. At that time all sealing materials shall be removed from the top of bolt sleeves and all trash, antifreeze material, or water shall be removed from the sleeves. The verification shall also include confirmation that any painting or protective coatings as required by the equipment manufacturer have been applied.
3. Unless otherwise specified by the equipment manufacturer or specifications, all nuts for anchor bolts shall be brought to a snug-tight condition, followed by an additional one-quarter of a full turn. Snug tight is defined as the tightness attained by a few impacts of an impact wrench or the full effort of a man using an ordinary spud wrench.
4. Drilled-in anchors furnished shall be as specified. Anchors shall be installed in accordance with the manufacturer's recommended procedures.

E. Welding:

1. Welding that may be required for structural supports, non-pressure retaining parts, shims, etc. shall be performed in accordance with the requirements of AWS D1.1 or AWS D1.3 as applicable to the material thickness.
2. Special care shall be taken when welding around equipment.
3. Welding lead grounds shall be connected to the item being welded. DO NOT GROUND THROUGH ANY EQUIPMENT

F. Initial Setting Requirements:

1. Manufacturer's installation manuals and directions shall govern all installation and erection work. Equipment shall be handled, rough-set and grouted to the correct elevation, location, and levelness and within the tolerances given on the Drawings, installation manuals or as specified below. Jacking and/or leveling bolts not provided by the manufacturer shall be furnished by the Contractor. In all cases, a sufficient number of jacking or leveling bolts, shims or other such provisions shall be furnished to properly set baseplates without sag or stress.
2. Baseplates and equipment shall normally be set and leveled separately, except certain equipment and its baseplates may be preattached prior to initial setting, but only after approval by Owner.
3. When temporary shim stacks are used for leveling equipment, and particularly under cast iron or other brittle material, such temporary shims shall be removed prior to grouting. Shims, fillers and other supports which shall remain in place shall be secured against shifting by tack welding the stack together at its accessible edges and completely surrounding it with grout.
4. The jack bolts used for setting equipment and to separate bearing plates shall be backed off or removed after grouting of plates or equipment.

5. All separate bearing plates shall be set level and flat within manufacturer's prescribed tolerances and to an elevation 1/8 to 1/4-inch below that required for the surface of the machine base that they are to support. The difference shall be made up when the equipment is set with stacks of assorted shims, properly secured against shifting, in accordance with the manufacturer's instructions, and having sufficient area to transmit all expected static and dynamic loading without distortion of the equipment.
6. In the cases of equipment having more than one component mounted on a common base and those that are set on separate bearing plates, the stacks of filler shims shall be so arranged and secured that subsequent doweling after run-in and final alignment check shall penetrate the shims so that dowels are not subjected to unsupported bending.
7. Consideration shall be given in all phases of the work for the operating requirements of the equipment and due allowances shall be made for thermal expansion of all components, thrust loadings, shaft sag, etc. as specified in the manufacturer's installation manual or Drawings.
8. Local chipping of concrete may be performed but only after approval by the Owner. Temporary and permanent jacking plates and wedge blocks required for setting of bearing plates and alignment of equipment shall be set in grout.
9. The major parts of equipment shall be landed and initially set, aligned and leveled to the position and elevation indicated on applicable Drawings within tolerances required for attachment of connecting piping and for completing the assembly of the equipment. Unless otherwise stated in the manufacturer's instructions, these tolerances for location shall be plus or minus 1/4-inch relative to the Drawing reference lines at either end of the longest part of the assembled unit in each of the three perpendicular planes of reference for purposes of external connections. Assembly and leveling tolerances of components of field assembled equipment shall be much closer.
10. After initial setting of equipment, the location and parallelism of the main piping connections shall be checked with respect to the planes of reference established by the control points. If deviations in excess of the above tolerances pro-rated for the distances involved, e.g., across a flanged face, are indicated, the Owner shall be advised.
11. Contractor shall be responsible for the correct setting, mounting, leveling, and alignment of the equipment in accordance with the manufacturer's requirements, and shall maintain and submit to Owner’s Representative written records of alignment readings.
    a. Contractor shall cooperate with Owner’s Representatives, the equipment supplier in the setting and aligning of equipment.
    b. Contractor shall notify Owner 24 hours in advance for pre-placement inspection and arranging for Test Lab participation.

G. Grouting: Refer to Section 03 60 00, Structural and Equipment Grouting for grout requirements.

H. Lubrication:

1. Lubrication shall be maintained in journal and thrust bearings as recommended by the equipment manufacturer during storage and lay-up periods, to provide adequate lubrication while rotating equipment shafts.
2. Pressure sealed, factory lubricated bearings require little or no lubrication prior to operation and attempts to inject excess lubricant may damage the seals.
3. All lubrication and oil systems shall be free from dust, dirt and other foreign materials prior to the charging of lubricants.

I. Tools and Spare Parts: All erection tools and spare parts furnished with the equipment shall be turned over to the Owner at the conclusion of erection. Any tools furnished with the equipment and used by the Contractor for erection purposes shall be replaced if lost or broken, or cleaned and reconditioned to the satisfaction of the Owner before being turned over.

3.04 EQUIPMENT PRECISION ALIGNMENT

A. General:

1. Alignment of rotating equipment and its motor drive shall include furnishing of dowels, doweling of equipment, and drivers to baseplates where required, leveling and aligning of sole and sub-soleplates. This shall also include any checking and adjusting of bearings for proper clearances, establishing the specified rotor-to-stator air gap for motors, realigning of all equipment that is shipped as a complete unit from the shop, and rechecking of all alignment before startup. If equipment is realigned, dowel holes shall be reamed again and the dowels reinstalled. Equipment shall not be operated without the dowels firmly set in place. Tolerance on initial shaft alignment and realignment of the above work shall be within the manufacturer’s specified limits.
2. Alignment of the equipment shall be in strict accordance with the instructions provided in the manufacturer’s installation manual, or within 0.002 rim and 0.001 face.
3. All couplings shall be left loose after setting and preliminary alignment. If a piece of equipment and its driver have been shipped as a complete assembled unit, the coupling shall be loosened before field alignment.
4. After all piping or ducts have been connected to the equipment and initial start-up is ready to begin, a check shall be made of the alignment. The equipment shall be realigned if necessary, and written approval obtained from the Owner prior to makeup of the coupling. Motor halves of couplings shall be safely secured prior to motor rotational check.
5. Equipment used for torqueing of bolts, coupling alignment, etc. shall be calibrated within 1 year of the work being performed, and the torqueing procedures approved by the Owner prior to their use.
6. After final alignment of anchor bolts, locking or jam nuts shall be provided for all bolts and shall be drawn up tightly. All anchor bolts

having a projection beyond the locking nut of more than one-half the bolt diameter shall be cut off and deburred.

7. During testing and preliminary operation, measurements of vibration amplitude or acceleration and frequency shall be made by Contractor and witnessed by Owner on rotating equipment and shall be recorded. Acceptable readings shall be one of the final acceptance criteria for such equipment. In the event that the measurements indicate vibration in excess of the specified limits, corrective action(s) shall be taken by the Contractor in accordance with the instructions given by the equipment manufacturer and approved by the Owner.

B. Alignment System Requirements:

1. The measurement system is required to provide repeatable readings when exercised through one rotation of the shaft(s). Repeatability is the significant characteristic that guarantees adherence to the Specification.
2. Minimum Requirements:
   a. This standard shall be used as a minimum requirement for all rotating equipment alignment. If the tolerances or criteria become unobtainable for individual alignment jobs, appropriate documentation shall be provided detailing the conditions causing the shortcoming and a plan developed to resolve these issues.
3. Shaft Alignment Requirements:
   a. All shaft-to-shaft centerline alignments shall be within the tolerances specified in Table 1, unless more stringent tolerances are required by the equipment manufacturer. The tolerances shown are the maximum allowable deviations from desired values (targets), whether such values are zero or nonzero. A nonzero target is an intentional offset or angular misalignment to compensate for events such as thermal growth, dynamic loads, etc. If more precise tolerances are specified by the machine manufacturer or by the purchasing engineer for special applications, these shall be used in lieu of the values in Table 1.

Table 1
Shaft Tolerances

RPM	Offset (mils)	Angularity (mils/inch of couple dia.)
600	5.0	1.0
900	3.0	0.7
1200	2.5	0.5
1800	2.0	0.3
3600	1.0	0.2
7200	0.1	0.1

Notes:
(1) The above standard shall be established at the cold alignment position.

Table 1 Shaft Tolerances		
RPM	**Offset (mils)**	**Angularity (mils/inch of couple dia.)**
(2) If the above tolerances become unobtainable for individual alignment jobs, appropriate documentation shall be provided detailing the conditions causing this shortcoming and a plan developed to resolve this shortcoming. (3) If more precise tolerances are specified by the machine manufacturer or by the purchasing engineer for special applications, these shall be used in lieu of the values in Table 1.		

4. Soft Foot:
   a. Soft foot is a condition that exists when the bottom of all feet of a machine are not in the same plane (i.e. not coplanar). Soft foot is present if the machine frame distorts when a foot bolt is loosened or tightened. It shall be corrected before the machine is actually aligned. Soft foot tolerance is 0.002 inch, measured at the machine foot (Table 2).
   b. Shaft Spacers can be treated as a continuation of the shaft from either the driver or driven machine. The aligner can use either coupling flange to establish the center of the coupling. Spacer shafts can be dealt with in-this manner because alignments are shaft to shaft.
5. Foot Centerline Deformations:
   a. The stiffness of the machine base shall be sufficient that no foot at the centerline shall deformation or deflect more than 0.001-inch over the operating range from alignment conditions to full load conditions in Table 2.

Table 2 Foot Tolerances	
Parameter	**Tolerance**
Soft Foot (measured at the machine foot)	0.002” max
Foot Centerline Deformation (No load to full load)	0.001” max
Foot Movement Caused By Pipe Flange Tightening	0.002” max
Maximum Total Shim Pack (including the spacer block)	5 max

6. Base Tolerances:
   a. Rotating Equipment Shaft Leveling: Assembled equipment shafts shall be set level to 0.001 inches per foot of shaft length (plus or minus 0.005 inches) up to a maximum of 0.001 inches for any length shaft unless otherwise noted in the equipment specifications. Use the machine surfaces on which the equipment sets for the base/mounting frame leveling plane. Use the machined shaft surface for equipment leveling plane.
   b. Bases shall be of sufficient rigidity not to distort when hold-down bolts are tightened. In addition, the surfaces under all of the machines' feet shall be in the same plane and flat within 0.001 inch.
7. Bases and Foundations:
   a. The base and foundation shall be visually inspected for cracks and uneven mating surfaces. Grossly uneven mating surfaces shall be corrected by grinding, machining or grouting. Footprint areas on the baseplate shall be checked with machinist level and shall be corrected.
   b. For machines consisting of a single steel plate, plate thickness shall equal or exceed the thickness of the machine foot, but no less than the values in Table 3.

Table 3
Minimum Baseplate Thickness for Single Steel Plates

0 to 25 hp	3/4-inch Single Steel Plate
25 to 75 hp	1-inch Single Steel Plate
75 to 150 hp	1-1/2-inch Single Steel Plate
150 hp and Above	2-inch Single Steel Plate

C. Base Grout:

1. Grout: Epoxy type grout shall be used on all rotating equipment bases. Cementitious type grout shall be used on non-rotating static type of equipment. Refer to Section 03 60 00, Structural and Equipment Grouting for grout requirements.
2. Grout Space: When grouting is required, follow equipment manufacturer recommended minimum grout thickness. Equipment shall be shimmed to allow a minimum of one inch grout thickness, when specific criteria is not provided by the equipment manufacturer. Grout shall cover shims at least 1/2 inch.
3. Anchoring: Tighten anchors avoiding thread damage. For post installed concrete anchors, use methods specified by anchor manufacturer.
4. Level Check: Final level check shall be held for inspection and approval by authorized Owner Representative before proceeding.
5. Anchor Bolts: Fill anchor bolt holes with grout, after bolt alignment is proven, and prior to placing grout under equipment bases.

6. Surface Preparation: Follow grout manufacturer's preparation instructions. Roughen surface by chipping, removing laitance and unsound concrete. Clean area of all foreign material such as oil, and grease.
7. Application: Place grout after the equipment base has been set and its alignment and level have been approved. Form around the base, mix grout and place in accordance with grout manufacturer's published instructions.
8. Finishing: Point the edges of the grout to form a smooth 45 degree slope.
9. Pipe Strain:
    a. Piping shall be fitted, supported, and sufficiently flexible such that casing distortion due to movement caused by tightening pipe flanges does not exceed 0.002 inch (measured at the shaft). On new installations, pipe stress exceeding the allowable tolerance shall be corrected before the machine is final aligned.
    b. On existing installations, pipe stress exceeding the allowable tolerance shall be corrected before the machine is aligned whenever feasible.
10. Thermal Growth: Thermal growth refers to the expansion of materials with temperature rise. For alignment purposes, thermal growth means the movement of shaft centerlines associated with the change in temperature from conditions at time of alignment to operating conditions. This change in temperature can produce changes in alignment that may affect offset and/or angularity. Alignment parameters shall be measured and adjusted for thermal growth.
11. Shims shall meet the following specifications:
    a. Commercially die-cut.
    b. Made of corrosion and crush resistant stainless steel, which is dimensionally stable when subjected to high compression over long periods of time.
    c. Consistent over the whole shim area without seams or folds from bending.
    d. All shims shall be measured to verify actual thickness. This measurement is to be taken in the throat of the shim.
    e. Clean, free from burrs, bumps, nicks and dents of any kind. Remove all machining burrs or thread pulls in female holes on mating surfaces of mounting frame and machine feet. Mounting feet of machines and mounting base pads and frames shall be free of all grease, rust, paint, and dirt before assembly and/or shipping.
    f. For shims 10 mils or greater, size numbers shall be etched into the shim, not printed or stamped.
    g. The overall shim pack shall not exceed a total of five shims.
    h. Shims shall rest on bare metal, not paint or other coatings.
12. Axial Shaft Play: Shaft axial movement along the machine centerline caused by axial forces, thermal expansion/contraction, is permitted by journal bearings and/or looseness, but shall be reduced as much as

possible. For rolling element bearings, if minimum end play tolerances are not provided on motor Drawings a value of 0.003 inch shall be used.

13. Machinery Movements:
    a. Machines shall be adjusted with small, precise movements. Excessive force that could cause internal or excessive damage is to be avoided. Steel-hammer blows on bare steel or an iron machine housing is unacceptable. Hammering on wooden blocks is acceptable. Jackbolts are the preferred movement method.
    b. Horizontal, coarse threaded jackbolts shall be installed at each mounting foot on both sides of the driver machine.
    c. Jackbolts shall be positioned in line with the mounting bolts at each foot on both sides of the driver machine.
    d. Jackbolt diameter shall be equal to or greater than the diameter of the largest bolt that will fit the driver frame mounting bolt hole.
    e. The jackbolt guide shall be fixed to the machine base and shall be either a nut sized for the jackbolt or a braced flat plate with through tapped threads equal to the thickness of the nut.
    f. "Bolt bound" conditions can be handled in various ways, depending on the situation at the jobsite. The following methods are acceptable:
        1) Moving both machines.
        2) Undercutting of the bolts outer diameter down to the minor diameter is permitted, but the bolt shall not be decreased in diameter more than 10 percent.
        3) Enlarging the hole is acceptable if structural integrity is not compromised.
        4) Upon completion of all movement, the machine is to be secured by tightening the hold down bolts to the manufactures recommended torque specifications. Soft foot checks, releasing one motor foot hold down bolt at a time, record the foot deflection, retighten the hold bolt, repeat until all motor foot deflection has been recorded. If Soft Foot is found greater than .002 on any foot, re-shimming is required. Upon completion of torqueing, final shaft-to-shaft readings shall be taken and reported as the final orientation. All jackbolts shall be left loose upon completion of alignment.
        5) Doweling of machines in place shall not be done unless the installation instructions specifically require it.

D. Alignment Procedures and Documentation:

1. Contractor's alignment procedures and activities are subject to review and witnessing by the Owner's Representative. Procedures shall be provided to the Owner before start of Contractor's work and ample advance notice of the alignment activities shall be given to Owner's Representative.

2. Contractor shall document and record all alignment parameters for the erected equipment. Copies of these Documents shall be provided to Owner's Representative.

3.05 FIELD QUALITY CONTROL

A. Weld Examination: Nondestructive examination of welds on structural supports, nonpressure retaining parts, shims, etc. shall be in accordance with AWS D1.1 or AWS D1.3 as applicable to the material thickness.

B. Grout Testing: Refer to Section 03 60 00, Structural and Equipment Grouting for grout testing requirements.

C. Contractor shall perform the work in accordance with the manufacturer's instructions and recommendations. All deficiencies in Contractor's workmanship that do not meet the manufacturer's requirements shall be Contractor's responsibility.

D. Contractor shall ensure that all test equipment used is properly calibrated at time of use. Contractor shall maintain calibration records as required and make those available to the Owner as requested.

E. Inspections:

1. The Contractor shall perform the following inspections as specified herein:
    a. Foundation inspection, prior to setting of equipment.
    b. Initial setting and alignment of equipment on foundations before grouting.
    c. Final alignment and check after piping has been connected to rotating equipment prior to initial startup.
    d. Final recheck of coupling alignment after initial run-in and before doweling (doweling may be done before operation of rotational equipment).
    e. Assembly inspections required by the manufacturer.
    f. Lubrication and oil system cleanliness and lubricant levels.
2. Work shall not continue until the Owner has approved the results and related documentation for any inspections and test.

F. Pre-Operational Checkout and Startup:

1. Prior to initial operation, the Contractor shall perform a joint final inspection with the Owner to ensure that the installation has been correctly and completely done. Upon correction of any deficiencies in the installation, the Contractor shall notify the Owner in writing that the system is mechanically complete and ready for acceptance.
2. After the system is accepted by the Owner as ready for commissioning, the Owner's operators will conduct preliminary operations such as

running rotating equipment, introducing circulating fluids, etc. and will bring the system on line.

3. After the system is accepted by the Owner, the Owner will furnish any consumable material and equipment required to place the equipment in a ready to operate condition. The consumables include but are not limited to gaskets, belts, and filters.
4. The Contractor shall provide: Any temporary material and equipment required to support inspection and testing. These include but are not limited to hoses, spool pieces, hydrostatic pumps, test equipment and gauges, and alignment calipers.

3.06 CONSTRUCTION TESTING

A. Contractor shall perform construction testing identified herein and as referenced by standards and codes that will verify that the installation of systems, or components, is complete and complies with applicable Specifications, standards, codes, Drawing and engineering requirements. Construction testing and associated support activities include, but are not necessarily limited to, the work specified herein. Owner may require additional testing by Contractor to verify compliance with the design documents and codes.

B. All piping erected by Contractor shall be leak-tested in accordance with the applicable governing code. For hydrostatic tests performed by Contractor, Contractor shall provide temporary hydro pumps and connection lines for filling, draining and performing the hydrostatic tests. All piping and equipment outside the boundaries of the pressure test shall be properly vented.

C. Contractor shall adequately support the piping systems during hydrostatic tests to prevent undue stress on spring hangers.

D. Contractor shall perform hydrostatic/pressure testing of buried piping prior to backfilling.

E. Contractor shall perform hydrostatic or head tests on field-erected tanks.

F. Contractor shall provide all high-point vents and low-point drains for proper flushing, startup, operation, and shutdown of all piping systems.

G. Materials, chemicals, temporary piping, fittings, valves, hoses, pumps, scaffolding, etc., required for testing shall be supplied, installed, and removed by Contractor as required for performance of the Work.

3.07 STARTUP AND COMMISSIONING

A. The Contractor is responsible for supporting startup and commissioning of all equipment and systems. Refer to Section 01 91 14, Equipment Testing and Facility Startup for requirements. The Contractor's startup and commissioning work may include but not limited to:

1. Equipment performance data recorded at site such as pump capacity, motor amps, etc.
2. Checking and tagging of equipment in preparation for the tests.
3. Inspections made on each item of equipment, such as lubrication, clearances, vibration readings, calibrations, alignment checks, insulation tests, rotation tests.
4. Calibration, testing and adjustment of all auxiliary devices, pressure switches, temperature switches, level switches, limit switches, indicators, etc.

B. After installation, Contractor shall blow out all control air system piping and sensing lines and pneumatic control lines with clean filtered compressed air. Contractor shall pressure test all draft gauge and control air piping and pneumatic control lines for leaks to ensure the system is tight.

C. Contractor shall flush and clean all piping systems installed herein. This flush shall be mainly for removal of construction debris. Contractor shall use non-permanent plant equipment for performing the flushes or may, at Owner's discretion, use permanent plant equipment for the flushes. Owner's operating personnel will operate all permanent plant equipment. Contractor shall remove, clean, and reinstall startup strainers during flushing operations.

D. If equipment manufacturer recommends that equipment bearings or lubricating oil consoles be bypassed during flushing, Contractor shall furnish and install temporary bypass piping around bearings and consoles as required before flushing. Contractor shall remove same after flushing and restore permanent piping.

E. The Owner's operating personnel will operate all permanent plant equipment.

F. After successful commissioning of the system, the Owner will assume all responsibility for subsequent maintenance and the Contractor's responsibility for supplying maintenance assistance shall cease.

END OF SECTION

SECTION 01 77 00
CLOSEOUT PROCEDURES

PART 1 GENERAL

1.01 SUBMITTALS

A. Informational Submittals:

1. Submit prior to application for final payment.
    a. Record Documents: As required in General Conditions.
    b. Approved Shop Drawings and Samples: As required in the General Conditions.
    c. Special bonds, Special Guarantees, and Service Agreements.
    d. Consent of Surety to Final Payment: As required in General Conditions.
    e. Releases or Waivers of Liens and Claims: As required in General Conditions.
    f. Releases from Agreements.
    g. Final Application for Payment: Submit in accordance with procedures and requirements stated in Section 01 29 00, Payment Procedures.
    h. Extra Materials, Spare Parts, Special Tools: As required by individual Specification sections.

1.02 RECORD DOCUMENTS

A. Quality Assurance:

1. Furnish qualified and experienced person, whose duty and responsibility shall be to maintain record documents.
2. Accuracy of Records:
    a. Coordinate changes within record documents, making legible and accurate entries on each sheet of Drawings and other documents where such entry is required to show change.
    b. Purpose of Project record documents is to document factual information regarding aspects of the Work, both concealed and visible, to enable future modification of the Work to proceed without lengthy and expensive Site measurement, investigation, and examination.
3. Make entries within 24 hours after receipt of information that a change in the Work has occurred.
4. Prior to submitting each request for progress payment, request Engineer's review and approval of current status of record documents. Failure to properly maintain, update, and submit record documents may result in a

deferral by Engineer to recommend whole or any part of Contractor's Application for Payment, either partial or final.

1.03 RELEASES FROM AGREEMENTS

A. Furnish Owner written releases from property owners or public agencies where side agreements or special easements have been made, or where Contractor's operations have not been kept within the Owner's construction right-of-way.

B. In the event Contractor is unable to secure written releases:

1. Inform Owner of the reasons.
2. Owner or its representatives will examine the Site, and Owner will direct Contractor to complete the Work that may be necessary to satisfy terms of the side agreement or special easement.
3. Should Contractor refuse to perform this Work, Owner reserves right to have it done by separate contract and deduct cost of same from Contract Price or require Contractor to furnish a satisfactory bond in a sum to cover legal Claims for damages.
4. When Owner is satisfied that the Work has been completed in agreement with Contract Documents and terms of side agreement or special easement, right is reserved to waive requirement for written release if: (i) Contractor's failure to obtain such statement is due to grantor's refusal to sign, and this refusal is not based upon any legitimate Claims that Contractor has failed to fulfill terms of side agreement or special easement, or (ii) Contractor is unable to contact or has had undue hardship in contacting grantor.

PART 2 PRODUCTS (NOT USED)

PART 3 EXECUTION

3.01 MAINTENANCE OF RECORD DOCUMENTS

A. General:

1. Promptly following commencement of Contract Times, secure from Engineer at no cost to Contractor, one complete set of electronic Contract Documents. Contractor shall be responsible for hardcopy Contract Documents to be used during construction and for Record Documents.
2. Label or stamp each record document with title, "RECORD DOCUMENTS," in neat, large, printed letters.
3. Record information concurrently with construction progress and within 24 hours after receipt of information that change has occurred. Do not cover or conceal Work until required information is recorded.

B. Preservation:

1. Maintain documents in a clean, dry, legible condition and in good order. Do not use record documents for construction purposes.
2. Make documents and Samples available at all times for observation by Engineer.

C. Making Entries on the Drawings:

1. Using an erasable colored pencil (not ink or indelible pencil), clearly describe change by graphic line and note as required.
    a. Color Coding:
        1) Green when showing information deleted from the Drawings.
        2) Red when showing information added to the Drawings.
        3) Blue and circled in blue to show notes.
2. Date entries.
3. Call attention to entry by "cloud" drawn around area or areas affected.
4. Legibly mark to record actual changes made during construction, including, but not limited to:
    a. Depths of various elements of foundation in relation to finished first floor data if not shown or where depth differs from that shown.
    b. Horizontal and vertical locations of existing and new Underground Facilities and appurtenances, and other underground structures, equipment, or Work. Reference to at least two measurements to permanent surface improvements.
    c. Location of internal utilities and appurtenances concealed in the construction referenced to visible and accessible features of the structure.
    d. Locate existing facilities, piping, equipment, and items critical to the interface between existing physical conditions or construction and new construction.
    e. Changes made by Addenda and Field Orders, Work Change Directive, Change Order, and Engineer's written interpretation and clarification using consistent symbols for each and showing appropriate document tracking number.
5. Dimensions on Schematic Layouts: Show on record drawings, by dimension, the centerline of each run of items such as are described in previous subparagraph above.
    a. Clearly identify the item by accurate note such as "cast iron drain," "galv. water," and the like.
    b. Show, by symbol or note, vertical location of item ("under slab," "in ceiling plenum," "exposed," and the like).
    c. Make identification so descriptive that it may be related reliably to Specifications.

3.02 FINAL CLEANING

A. At completion of the Work or of a part thereof and immediately prior to Contractor's request for certificate of Substantial Completion; or if no certificate is issued, immediately prior to Contractor's notice of completion, clean entire Site or parts thereof, as applicable.

1. Leave the Work and adjacent areas affected in a cleaned condition satisfactory to Owner and Engineer.
2. Remove grease, dirt, dust, paint, concrete, or plaster splatter, stains, labels, fingerprints, and other foreign materials from exposed surfaces.
3. Repair, patch, and touchup marred surfaces to specified finish and match adjacent surfaces.
4. Clean all windows.
5. Clean and wax wood, vinyl, or painted floors.
6. Broom clean exterior paved driveways and parking areas.
7. Hose clean sidewalks, loading areas, and others contiguous with principal structures.
8. Rake clean all other surfaces.
9. Regrade/patch road.
10. Leave water courses, gutters, and ditches open and clean.

B. Use only cleaning materials recommended by manufacturer of surfaces to be cleaned.

END OF SECTION

SECTION 01 78 23
OPERATION AND MAINTENANCE DATA

PART 1 GENERAL

1.01 SECTION INCLUDES

A. Detailed information for the preparation, submission, and Engineer's review of Operations and Maintenance (O&M) Data, as required by individual Specification sections.

1.02 DEFINITIONS

A. Preliminary Data: Initial and subsequent submissions for Engineer's review prior to final data being accepted by Engineer.

B. Final Data: Engineer-accepted data, submitted as specified herein.

C. Maintenance Operation: As used on Maintenance Summary Form is defined to mean any routine operation required to ensure satisfactory performance and longevity of equipment. Examples of typical maintenance operations are lubrication, belt tensioning, adjustment of pump packing glands, and routine adjustments.

1.03 SEQUENCING AND SCHEDULING

A. Equipment and System Data:

1. Preliminary Data:
   a. Do not submit until Shop Drawing for equipment or system has been reviewed and approved by Engineer.
   b. Submit prior to shipment date.
2. Final Data: Submit Instructional Manual Formatted data not less than 30 days prior to equipment or system field functional testing. Submit Instructional Manual Formatted and Electronic Media Formatted data prior to Substantial Completion of Project.

B. Materials and Finishes Data:

1. Preliminary Data: Submit at least 21 days prior to request for final inspection.
2. Final Data: Submit within 10 days after final inspection.

1.04 DATA FORMAT

A. Prepare preliminary and final data in the form of an instructional manual. Also prepare final data in electronic media format.

B. Instructional Manual Format:

1. Binder: Commercial quality, permanent, three-ring binders with durable plastic cover.
2. Size: 8-1/2 inches by 11 inches, minimum.
3. Cover: Identify manual with typed or printed title "OPERATION AND MAINTENANCE DATA" and list:
    a. Project title.
    b. Designate applicable system, equipment, material, or finish.
    c. Identity of separate structure as applicable.
    d. Identify volume number if more than one volume.
    e. Identity of general subject matter covered in manual.
    f. Identity of equipment number and Specification section.
4. Spine:
    a. Project title.
    b. Identify volume number if more than one volume.
5. Title Page:
    a. Contractor name, address, and telephone number.
    b. Subcontractor, Supplier, installer, or maintenance contractor's name, address, and telephone number, as appropriate.
        1) Identify area of responsibility of each.
        2) Provide name and telephone number of local source of supply for parts and replacement.
6. Table of Contents:
    a. Neatly typewritten and arranged in systematic order with consecutive page numbers.
    b. Identify each product by product name and other identifying numbers or symbols as set forth in Contract Documents.
7. Paper: 20-pound minimum, white for typed pages.
8. Text: Manufacturer's printed data, or neatly typewritten.
9. Three-hole punch data for binding and composition; arrange printing so that punched holes do not obliterate data.
10. Material shall be suitable for reproduction, with quality equal to original. Photocopying of material shall be acceptable, except for material containing photographs.

C. Electronic Media Format:

1. Portable Document Format (PDF):
    a. After all preliminary data has been found to be acceptable to Engineer, submit Operation and Maintenance data in PDF format on secure file share site and on a flash drive.
    b. Files to be exact duplicates of Engineer-accepted preliminary data. Arrange by Specification number and name.
    c. Files to be fully functional and viewable in most recent version of Adobe Acrobat.
2. Manufacturers' standard electronic format may be acceptable upon acceptance by Engineer.

1.05 SUBMITTALS

A. Informational:

1. Data Outline: Submit an electronic copy of a detailed outline of proposed organization and contents of Final Data prior to preparation of Preliminary Data.
2. Preliminary Data:
   a. Submit one electronic copy for Engineer's review.
   b. If data does not meet conditions of the Contract:
      1) Data shall be returned to Contractor with Engineer's comments (on separate document) for revision.
      2) Engineer's comments shall be retained in Engineer's file.
      3) Resubmit revised version in accordance with Engineer's comments.
3. Final Data: Submit one hard copy and one electronic copy in format specified herein.

1.06 DATA FOR EQUIPMENT AND SYSTEMS

A. Content for Each Unit (or Common Units) and System:

1. Product Data:
   a. Include only those sheets that are pertinent to specific product.
   b. Clearly annotate each sheet to:
      1) Identify specific product or part installed.
      2) Identify data applicable to installation.
      3) Delete references to inapplicable information.
   c. Function, normal operating characteristics, and limiting conditions.
   d. Performance curves, engineering data, nameplate data, and tests.
   e. Complete nomenclature and commercial number of replaceable parts.
   f. Original manufacturer's parts list, illustrations, detailed assembly drawings showing each part with part numbers and sequentially numbered parts list, and diagrams required for maintenance.
   g. Spare parts ordering instructions.
   h. Where applicable, identify installed spares and other provisions for future work (e.g., reserved panel space, unused components, wiring, terminals).
2. As-installed, color-coded piping diagrams.
3. Charts of valve tag numbers, with the location and function of each valve.
4. Drawings: Supplement product data with the Drawings as necessary to clearly illustrate:
   a. Format:
      1) Provide reinforced, punched, binder tab; bind in with text.

2) Reduced to 8-1/2 inches by 11 inches, or 11 inches by 17 inches folded to 8-1/2 inches by 11 inches.
3) Where reduction is impractical, fold and place in 8-1/2-inch by 11-inch envelopes bound in text.
4) Identify Specification section and product on the Drawings and envelopes.

b. Relations of component parts of equipment and systems.
c. Control and flow diagrams.
d. Coordinate Drawings with Project record documents to assure correct illustration of completed installation.

5. Instructions and Procedures: Within text, as required to supplement product data.
   a. Format:
      1) Organize in consistent format under separate heading for each different procedure.
      2) Provide logical sequence of instructions for each procedure.
      3) Provide information sheet for Owner's personnel, including:
         a) Proper procedures in event of failure.
         b) Instances that might affect validity of guarantee or Bond.
   b. Installation Instructions: Including alignment, adjusting, calibrating, and checking.
   c. Operating Procedures:
      1) Startup, break-in, routine, and normal operating instructions.
      2) Test procedures and results of factory tests where required.
      3) Regulation, control, stopping, and emergency instructions.
      4) Description of operation sequence by control manufacturer.
      5) Shutdown instructions for both short and extended duration.
      6) Summer and winter operating instructions, as applicable.
      7) Safety precautions.
      8) Special operating instructions.
   d. Maintenance and Overhaul Procedures:
      1) Routine maintenance.
      2) Guide to troubleshooting.
      3) Disassembly, removal, repair, reinstallation, and re-assembly.
6. Guarantee, Bond, and Service Agreement: In accordance with Section 01 77 00, Closeout Procedures.

B. Content for Each Electric or Electronic Item or System:

1. Description of Unit and Component Parts:
   a. Function, normal operating characteristics, and limiting conditions.
   b. Performance curves, engineering data, nameplate data, and tests.
   c. Complete nomenclature and commercial number of replaceable parts.

d. Interconnection wiring diagrams, including control and lighting systems.

2. Circuit directories of panelboards.
3. Electrical service.
4. Control requirements and interfaces.
5. Communication requirements and interfaces.
6. List of electrical relay settings, and control and alarm contact settings.
7. Electrical interconnection wiring diagram, including as applicable, single-line, three-line, schematic and internal wiring, and external interconnection wiring.
8. As-installed control diagrams by control manufacturer.
9. Operating Procedures:
   a. Routine and normal operating instructions.
   b. Startup and shutdown sequences, normal and emergency.
   c. Safety precautions.
   d. Special operating instructions.
10. Maintenance Procedures:
    a. Routine maintenance.
    b. Guide to troubleshooting.
    c. Adjustment and checking.
    d. List of relay settings, control and alarm contact settings.
11. Manufacturer's printed operating and maintenance instructions.
12. List of original manufacturer's spare parts, manufacturer's current prices, and recommended quantities to be maintained in storage.

C. Maintenance Summary:

1. Compile individual Maintenance Summary for each applicable equipment item, respective unit or system, and for components or sub-units.
2. Format:
   a. Use Maintenance Summary Form bound with this section or Manufacturer's standard.
   b. Each Maintenance Summary may take as many pages as required.
   c. Use only 8-1/2-inch by 11-inch size paper.
   d. Handwritten summary documents shall not be accepted.
3. Include detailed lubrication instructions and diagrams showing points to be greased or oiled; recommend type, grade, and temperature range of lubricants and frequency of lubrication.
4. Recommended Spare Parts:
   a. Data to be consistent with manufacturer's Bill of Materials/Parts List furnished in O&M manuals.
   b. "Unit" is the unit of measure for ordering the part.
   c. "Quantity" is the number of units recommended.
   d. "Unit Cost" is the current purchase price.

1.07 DATA FOR MATERIALS AND FINISHES

A. Content for Architectural Products, Applied Materials, and Finishes:

1. Manufacturer's data, giving full information on products:
   a. Catalog number, size, and composition.
   b. Color and texture designations.
   a. Information required for reordering special-manufactured products.
2. Instructions for Care and Maintenance:
   a. Manufacturer's recommendation for types of cleaning agents and methods.
   b. Cautions against cleaning agents and methods that are detrimental to product.
   c. Recommended schedule for cleaning and maintenance.

B. Content for Moisture Protection and Weather Exposed Products:

1. Manufacturer's data, giving full information on products:
   a. Applicable standards.
   b. Chemical composition.
   c. Details of installation.
2. Instructions for inspection, maintenance, and repair.

1.08 SUPPLEMENTS

A. The supplement listed below, following "End of Section" is part of this Specification.

1. Form: Maintenance Summary Form.

PART 2 PRODUCTS (NOT USED)

PART 3 EXECUTION (NOT USED)

END OF SECTION

MAINTENANCE SUMMARY FORM

PROJECT:_____ CONTRACT NO.:_____

1. EQUIPMENT ITEM_____

2. MANUFACTURER _____

3. EQUIPMENT/TAG NUMBER(S) _____

4. WEIGHT OF INDIVIDUAL COMPONENTS (OVER 100 POUNDS)_____

5. NAMEPLATE DATA (hp, voltage, speed, etc.) _____

6. MANUFACTURER'S LOCAL REPRESENTATIVE _____

a. Name_____
Telephone No. _____

b. Address _____

7. MAINTENANCE REQUIREMENTS

Maintenance Operation Comments	**Frequency**	**Lubricant (If Applicable)**
List briefly each maintenance operation required and refer to specific information in manufacturer's standard maintenance manual, if applicable. (Reference to manufacturer's catalog or sales literature is not acceptable.)	List required frequency of each maintenance operation.	Refer by symbol to lubricant required.

8. LUBRICANT LIST

Reference Symbol	Shell	Exxon Mobile	Chevron Texaco	BP Amoco	"Or-equal"
List symbols used in No. 7 above.	List equivalent lubricants, as distributed by each manufacturer for the specific use recommended.				

9. RECOMMENDED SPARE PARTS FOR OWNER'S INVENTORY.

Part No.	Description	Unit	Quantity	Unit Cost
Note: Identify parts provided by this Contract with two asterisks.				

SECTION 01 88 15
ANCHORAGE AND BRACING

PART 1 GENERAL

1.01 SUMMARY

A. This section covers requirements for anchorage and bracing of equipment, distribution systems, and other nonstructural components required in accordance with the ICC 2021 International Building Code (IBC), for seismic, wind, gravity, soil, and operational loads.

1.02 REFERENCES

A. The following is a list of standards which may be referenced in this section:

1. American Institute of Steel Construction (AISC) 360-10, Specification for Structural Steel Buildings.
2. American Society of Civil Engineers (ASCE): ASCE 7-16, Minimum Design Loads for Buildings and Other Structures.
3. International Code Council (ICC): 2021 International Building Code (IBC).

1.03 DEFINITIONS

A. Authority Having Jurisdiction (AHJ): Permitting building agency; may be a federal, state, local, or other regional department, or individual including building official, fire chief, fire marshal, chief of a fire prevention bureau, labor department, or health department, electrical inspector; or others having statutory authority. AHJ may be Owner when authorized to be self-permitting by governmental permitting agency or when no governmental agency has authority.

B. Designated Seismic System: Architectural, electrical, and mechanical system or their components for which component importance factor is greater than 1.0.

1.04 DESIGN AND PERFORMANCE REQUIREMENTS

A. General:

1. Anchorage and bracing systems shall be designed by a qualified registered Louisiana Professional Engineer.
2. Design anchorage and bracing of architectural, mechanical, and electrical components and systems in accordance with this section, unless a design is specifically provided within Contract Documents or where exempted hereinafter.

3. Design attachments, braces, and anchors for equipment, components, and distribution systems to structure for gravity, seismic, wind, and operational loading.
4. Design seismic anchorage and bracing for modified existing architectural, mechanical, or electrical systems where code requirements would dictate design for similar new components.
5. Anchor and brace piping and ductwork, whether exempt or not exempt for this section, so that lateral or vertical displacement does not result in damage or failure to essential architectural, mechanical, or electrical equipment.
6. Architectural Components: Includes, but are not limited to, nonstructural walls and elements, partitions, cladding and veneer, access flooring, signs, cabinets, suspended ceilings, and glass in glazed curtain walls and partitions.
7. Provide supplementary framing where required to transfer anchorage and bracing loads to structure.
8. Adjust equipment pad sizes or provide additional anchorage confinement reinforcing to provide required anchorage capacities.
9. Design anchorage and bracing for:
    a. Equipment and components that weigh more than 400 pounds and have center of mass located 4 feet or less above adjacent finished floor.
    b. Equipment weighing more than 40 pounds that has center of mass located more than 4 feet above adjacent finished floor.
    c. Mechanical and electrical components that are not provided with flexible connections between components and associated ductwork, piping, or conduit.
    d. Distribution systems that weigh more than 5 pounds per foot that have center of mass located more than 4 feet above adjacent finished floor.
10. For components exempted from design requirements of this section, provide bolted, welded, or otherwise positively fastened attachments to supporting structure.

B. Design Loads:

1. Gravity: Design anchorage and bracing for self-weight and superimposed loads on components and equipment.
2. Wind: Design anchorage and bracing for wind criteria provided in Section 01 61 00, Common Product Requirements for exposed architectural components and exterior and wind-exposed mechanical and electrical equipment. Alternately, manufacturer certification may be provided for components such as roofing and flashing to verify attachments meet Project-specific design criteria.

3. Operational:
    a. For loading supplied by equipment manufacturer for IBC required load cases.
    b. Loads may include equipment vibration, torque, thermal effects, effects of internal contents (weight and sloshing), water hammer, and other load-inducing conditions.
    c. Locate braces to minimize vibration to or movement of structure.
    d. For vibrating loads, use anchors for vibratory loading per manufacturer's ICC-ES report.
4. Seismic:
    a. In accordance with Section 01 61 00, Common Product Requirements or Section 05 00 10, Structural Summary of Work.

C. Seismic Design Requirements:

1. Nonstructural Components: Design as nonbuilding structures for components with weights greater than or equal to 25 percent of effective seismic weight of overall structure.
2. Analyze local region of body of nonstructural component for load transfer of anchorage attachment if component Ip = 1.5.
3. The following are exempt from requirements for provision of seismic anchorages and bracing, in addition to those items specifically exempted in ASCE 7, Part 13.5 for architectural components and Part 13.6 for electrical and mechanical equipment:
    a. Furniture, except storage cabinets and bookshelves over 6 feet tall.
    b. Temporary or movable equipment.
4. Provide support drawings and calculations for electrical distribution components if any of the following conditions apply:
    a. Conduit diameter is greater than 2.5-inch trade size.
    b. Total weight of bus duct, cable tray, or conduit supported by trapeze assemblies exceeds 10 pounds per foot.
5. Existing components, systems, and equipment in their final condition that are modified by Project requirements and are not exempted by above paragraph require the same anchorage and bracing drawing and calculation submittals as new equipment. Field verify existing conditions.
6. Other seismic design and detailing information identified in ASCE 7-16 is required to be provided for new and modified or noted architectural, mechanical and electrical components, systems, or equipment.

1.05 SUBMITTALS

A. Action Submittals:

1. Shop Drawings:
    a. List of architectural, mechanical, and electrical equipment requiring Contractor-designed anchorage and bracing, unless specifically exempted.

b. Manufacturers' engineered seismic and non-seismic hardware product data.
c. Attachment assemblies' drawings including seismic attachments; include connection hardware, braces, and anchors or anchor bolts for nonexempt components, equipment, and systems.
d. List of existing architectural, mechanical, and electrical equipment or components to be modified in Project requiring Contractor-designed anchorage and bracing in final retrofitted condition.
e. Drawings for seismic attachment assemblies include connection hardware, braces, and anchors (or anchor bolts) for modified, nonexempt existing components, equipment, and systems where a combination of new and existing systems or components' final condition would require anchorage or bracing under this Specification for new equipment.
f. Submittal shall be rejected if proposed anchorage method would create excessive stress to supporting member. Revise anchorages and strengthen structural support to eliminate overstressed condition.

B. Informational Submittals:

1. Anchorage and Bracing Calculations: For attachments, braces, and anchorages, include IBC and Project-specific criteria as noted in Section 01 61 00, Common Product Requirements, and Section 05 00 10, Structural Summary of Work in addition to manufacturer's specific criteria used for design; sealed by a registered civil or structural Louisiana Professional Engineer.
2. Manufacturer's hardware installation requirements.

C. Deferred Submittals:

1. Submitted seismic anchorage Drawings and calculations are identified as IBC deferred submittals and shall be submitted to and shall be accepted by AHJ prior to installation of component, equipment, or distribution system.
2. Submit deferred Action Submittals such as Shop Drawings with supporting deferred Informational Submittals such as calculations no less than 4 weeks in advance of installation of component, equipment or distribution system to be anchored to structure.

1.06 SOURCE QUALITY CONTROL

A. Contractor and supplier responsibilities to accommodate shop fabrication related special inspections and testing are provided in Project's Statement of Special Inspections on the Drawings and Section 01 45 33, Special Inspection, Observation, and Testing.

B. If required, provide all other specified, regulatory required, or required repair verification inspection and testing that is not listed in Statement of Special Inspections in accordance with Section 01 45 16.13, Contractor Quality Control.

C. Provide Source Quality Control for hot-dip galvanizing of anchors in accordance with ASTM F2329.

PART 2 PRODUCTS

2.01 GENERAL

A. Design and construct attachments and supports transferring seismic and non-seismic loads to structure of materials and products suitable for application and in accordance with design criteria shown on contract documents and nationally recognized standards.

B. Provide and design anchor bolts for anchorage of equipment to concrete or masonry. Design of anchors by contractor is not required for anchors that are shown on the Design Drawings. Provide anchor bolts of the size, minimum embedment, and spacing designated in calculations submitted by Contractor and accepted by Engineer.

C. If required, provide and design post-installed concrete and masonry anchors for anchorage of equipment to concrete or masonry in accordance with Section 03 30 00, Cast-In-Place Concrete. Design of anchors by contractor is not required for anchors that are shown on the Design Drawings. Provide post-installed anchors of the size, minimum embedment, and spacing designated in calculations submitted by Contractor and accepted by Engineer.

D. Do not use powder-actuated fasteners or sleeve anchors for seismic attachments and anchorage where resistance to tension loads is required. Do not use expansion anchors, other than undercut anchors, for nonvibration isolated mechanical equipment rated over 10 horsepower.

PART 3 EXECUTION

3.01 GENERAL

A. Make attachments, bracing, and anchorage in such a manner that component lateral force is transferred to lateral force resisting system of structure through a complete load path.

B. Design, provide, and install overall seismic anchorage system to provide restraint in all directions, including vertical, for each component or system so anchored.

C. Provide snubbers in each horizontal direction and vertical restraints for components mounted on vibration isolation systems where required to resist overturning.

D. Provide piping anchorage that maintains design flexibility and expansion capabilities at flexible connections and expansion joints.

1. Piping and ductwork suspended more than 12 inches below supporting structure shall be braced for seismic effects to avoid significant bending of hangers and their attachments, unless high- or limited- deformability piping is used per ASCE 7, Section 13.6.8 or HVAC ducts have a cross-sectional area of less than 6 square feet or weigh 17 pounds per foot or less.

E. Anchor tall and narrow equipment such as motor control centers and telemetry equipment at base and within 12 inches from top of equipment, unless approved otherwise by Engineer.

F. Do not attach architectural, mechanical, or electrical components to more than one element of a building structure at a single restraint location where such elements may respond differently during a seismic event. Do not make such attachments across building expansion and contraction joints.

3.02 INSTALLATION

A. Do not install components or their anchorages or restraints prior to review and acceptance by Engineer and AHJ.

B. Notify Engineer upon completion of installation of seismic restraints in accordance with Section 01 45 33, Special Inspection, Observation, and Testing.

3.03 FIELD QUALITY ASSURANCE AND QUALITY CONTROL

A. Provide any other specified, regulatory required, or required repair verification inspection and testing that is not listed in Statement of Special Inspections in accordance with Section 01 45 16.13, Contractor Quality Control.

END OF SECTION

SECTION 01 91 14
EQUIPMENT TESTING, COMMISSIONING AND FACILITY STARTUP

PART 1 GENERAL

1.01 SUMMARY

A. Section includes general requirements that apply to implementation of commissioning without regard to specific systems, assemblies, or components.

B. Contractor is responsible for commissioning all equipment and systems included in the specifications including coordinating OEM support and coordination with Owner's Operations.

C. Operations of the Owner's facility shall not be impacted at any time. Submit outage and shut down requests and Commissioning/Startup needs at least 14 days in advance.

D. The following Commissioning/Startup sequence is referred to throughout these Specifications:
   1. Construction Completions - Verify that the applicable equipment and systems are installed in accordance with the Contract Documents and according to the manufacturer's recommendations.
   2. Unit (Equipment) Commissioning and Functional Testing - Verify and document proper performance of equipment supplied by Contractor and equipment provided by Owner.
   3. Facility Start-Up and Performance Testing – Verify the performance of the equipment and systems noted above as an integrated system including interface with and operation of existing Facility.
   4. Integrated Facility Testing - Verify the Facility Use Case scenarios integrated the new Power Plant with the Owner's existing Facility.
   5. Additionally:
      a. Unless otherwise provided in Owner's Equipment Supply Contracts, provide first-fills, flushing oil replacement fill and lubrication as required. If additional 'first-fill' chemicals are required due to fault of Contractor, Contractor shall supply.
      b. Verify that Operations and Maintenance documentation is complete.
      c. For Contractor supplied equipment, verify that sufficient training is provided to Owner's operating personnel to enable them to operate, monitor, adjust, maintain, and repair equipment and systems in an effective manner.
      d. Coordinate and manage Owner supplied equipment manufacturers.

e. Document the successful achievement of the commissioning objectives listed above.
f. Verify that operations and maintenance tools and spare components are supplied as required by the Contract Documents.

1.02 THE COMMISSIONING ORGANIZATION

A. The Contractor shall retain a Commissioning Authority and qualified Testing Companies as defined throughout these specifications experienced with Power Plant commissioning and testing as detailed below.

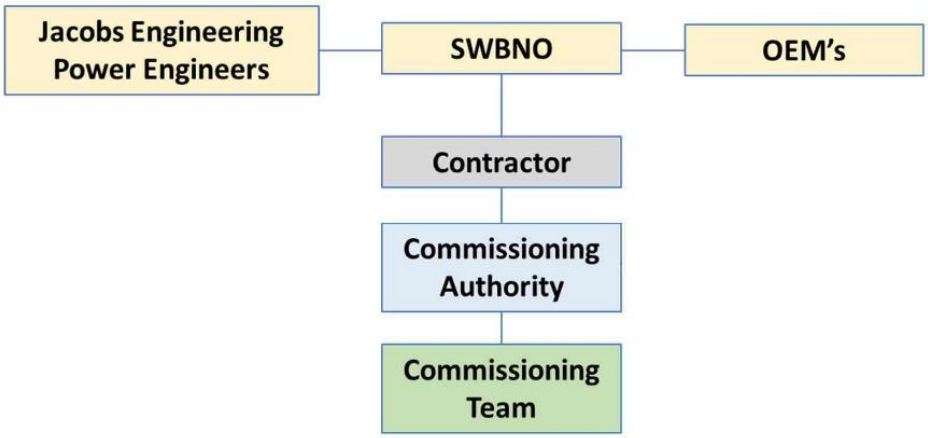

B. Qualifications:

1. Qualifications of Commissioning Authority:
   a. Membership and certification as a Certified Commissioning Firm (CCF) with the Building Commissioning Association or similar organization is required.
   b. Commissioning Firm shall have experience with at least four other power projects of similar managerial and technical complexity and a high level of experience in Hands-on field experience with energy systems performance, interaction, start-up, balancing, testing, troubleshooting, operation, and maintenance procedures for a minimum of 5 full years in this type of work.
   c. Contractor shall submit the Commissioning Authority's company qualifications and the resumes of the personnel proposed to be assigned to this Project for the Owner's approval within 30 days of Notice to Proceed (NTP).
2. Qualifications of Commissioning Personnel:
   a. A bachelor's degree in Engineering is required, and a Professional Engineer (PE) license is desired.
   b. Active Membership and valid certification as a Certified Commissioning Professional (CCP, CxA, etc.) with the Building Commissioning Association or similar organization is required.

3. Qualifications of NETA Testing Company:
   a. The NETA testing company shall meet OSHA 29 CFR 1907 criteria for accreditation of testing laboratories. A testing company with full membership in NETA constitutes proof of meeting such criteria. Contractors with employees that are full members of NETA, yet the Contractor is not, are not acceptable.
   b. Contractor shall submit the NETA testing company's qualifications and the resumes of the personnel proposed to be assigned to this Project for Owner approval before commencement of the Work.
4. Qualifications of Other Testing Companies: As defined by other Specifications in this package, Contractor shall submit other testing company's qualifications and the resumes of the personnel proposed to be assigned to this Project for Owner approval before commencement of the Work.

1.03 RELATED DOCUMENTS

A. Drawings and general provisions of the Contract, including General and Supplementary Conditions and other Division 01, General Requirements Specification sections, apply to this section.

1.04 DEFINITIONS

A. Facility: Entire Project, or an agreed-upon separable portion, including all of its unit processes.

B. Commissioning Dossier: Documentation per paragraph 3.02 of this Specification shall be provided to the Owner upon completion of the commissioning process. The documentation serves to document the commissioning process and the ultimate configuration of the commissioned plant.

C. Construction Completions Dossier: Documentation shall be provided to the Owner upon completion of the construction process. The documentation serves to document the construction process and the ultimate configuration of the plant.

D. Functional Test: Test or tests in presence of Owner to demonstrate that installed equipment meets manufacturer’s installation, calibration, and adjustment requirements and other requirements as specified.

E. Performance Test: Test or tests performed after any required functional test in presence of Owner to demonstrate and confirm individual equipment meets performance requirements specified in individual sections.

F. Unit Process: As used in this section, a unit process is a separable portion of the facility that performs a specific process function.

G. Facility Performance Demonstration:

1. A demonstration, conducted by Contractor, with assistance of Owner, to demonstrate and document the performance of the entire operating facility, both manually and automatically (if required), based on criteria developed in conjunction with Owner.
2. Such demonstration is for the purposes of (i) verifying to Owner entire facility performs as a whole, and (ii) documenting performance characteristics of completed facility for Owner's records. Neither the demonstration nor the evaluation is intended in any way to make performance of a unit process or entire facility the responsibility of Contractor unless such performance is otherwise specified.
3. Should any testing or demonstration be interrupted or require retest due to a failure attributable to Contractor, Contractor shall bear the full cost of that retest including additional vendor support and/or engineering support.

1.05 SUBMITTALS

A. Submittals:

1. Commissioning Agent Qualifications.
2. Commissioning Personnel Qualifications.
3. Testing Company(s) Qualifications.
4. Commissioning Schedule.
5. Facility Startup and Performance Demonstration Plan.
6. Training Plans / Syllabus / Trainer Qualifications.
7. Contractors Permit-To-Work/Lock-Out-Tag-Out Process.
8. Functional and performance test results.
9. Construction Completions Dossier.
10. Commissioning Dossier.
11. Completed Ready for Commissioning Certificate.
12. Completed Operational Test Certificate and Performance Test Certificate for each separable portion.
13. Completed Handover Certificate.

1.06 FACILITY STARTUP AND PERFORMANCE DEMONSTRATION PLAN

A. Develop a written plan, in conjunction with Owner's operations personnel; to include the following:

1. Step by step instructions for startup of each unit process and the complete facility.
2. Coordination meeting schedule and agenda. Establish meeting frequency as necessary to effectively test and startup equipment and systems under the scope of this Project. Comply with technical Specifications regarding Manufacturer's Representatives and Owner coordination. Coordination meetings are to be incorporated into the

project schedule and shall commence no less than 6 months prior to the first scheduled testing/startup activity.

3. System Startup ITP to minimally include the following for each Unit, Separable Portion or Facility:
    a. Description of the system, including equipment numbers/nomenclature of each item of equipment and all included devices as well as system limits and isolations.
    b. Identification and definition of any special safety precautions or procedures that shall be instituted during demonstration.
    c. Detailed procedure for startup of the system, including all controls to be operated, devices/controls/valves/switches to be opened/closed or on/off, order of equipment startup, etc.
    d. Startup requirements for each system, including service, power, cooling water, ventilation, chemicals, etc.
    e. Existing facility restrictions, prerequisites and if applicable, coordination.
    f. Personal protective equipment for those participating in the process.
    g. Space for evaluation comments.
4. Facility Performance ITP to minimally include the following:
    a. Description of systems included in the facility startup.
    b. Sequence of system(s) startup to achieve facility startup.
    c. Description of computerized operations, if any, included in the facility.
    d. Contractor certification facility is capable of performing its intended function(s), including fully automatic operation, if applicable.
    e. Signature spaces for Contractor and Owner.

PART 2 PRODUCTS (NOT USED)

PART 3 EXECUTION

3.01 GENERAL

A. Care Custody and Control: Contractor shall have responsibility for care, custody and control of Owner supplied equipment and material from delivery until handover to the Owner in accordance with paragraph 3.05 of this Specification.

B. Separable Portions: The Plant shall be organized into the following Separable Portions which may be handed over independently to the Owner.

1. FO Forwarding Pumps and interconnecting piping/cables:
    a. FO Transfer pump skids (located at permanent storage tanks) including pumps, piping, controls, and instrumentation.
    b. FO Transfer pump PLC.

c. Double Wall Piping connecting this pump skid to C7 Fuel Oil Day Tank.
d. Interconnecting Cable provided under Contract 1435 (and as may be supplemented by Contractor supplied cable) required to interconnect and power FO equipment.
e. Security and Fire Alarm Systems.

2. FO Supply Pumps, FO Return Pumps, FO Day tank and interconnecting piping/cables:
   a. FO Supply pump skids (located at WPC) including pumps, piping, controls, and instrumentation.
   b. FO Day tank,
   c. FO Unloading Station including piping and local display panel.
   d. Double Wall Piping connecting this pump skid to T7.
   e. Interconnecting Cable provided under Contract 1420 (and as may be supplemented by Contractor supplied cable) required to interconnect and power FO equipment.
   f. Security and Fire Alarm Systems.

C. Facility Startup Meetings: To discuss test schedule, test methods, materials, special requirements, facilities operations interface, and Owner involvement, including provision of external products, services, and/or utilities.

D. PDCS Use Case Meetings:

1. A Use Case is a defined set of circumstances the Facility shall be able to respond to. Examples include A) Hurricane Loads, all Facility Equipment and Entergy Grid Operational; B) Same as (A) but Entergy drops; (C) Same as (A) but CTG 6 trips off-line.
2. Contractor is to work with Owner to collectively develop a minimum of 200 use cases through periodic meetings run by the Commissioning Authority or PDCS System Integrator. Meetings to begin immediately after NTP and be held nominally monthly, more often as deemed necessary by Owner or Commissioning Authority/PDCS System Integrator,
3. Use Case Development Meetings are to be conducted approximately once a month from NTP though the beginning of Unit (Equipment) Commissioning and Functional Testing.

E. Completions Management System (CMS): Contractor shall implement a fully computerized and integrated Completions Management System that is to track all Construction Completions and Commissioning activities. The CMS is to include the Project Punchlist and be usable, accessible, and intuitive. Contractor shall provide documentation and training. Owner shall be provided access to the CMS with all records turned over to Owner at Project Completion.

F. PTW/LOTO System Requirements and Expectations:

1. A Project Permit to Work / Lock-Out Tag-Out system shall be implemented for specific construction activities and all commissioning activities taking place on equipment or systems where energy is applied including to upstream and downstream systems. The Permit to Work system shall be based on Contractors Permit to Work / LOTO system and shall be submitted for Owner review and approval prior to use.
2. Upon connection to Owner's permanent plant facility, Owner's Permit to Work /LOTO system shall be implemented for work connecting to those systems.
3. Contractor shall have a designated PTW/LOTO Manager assigned to the project whose primary responsibility shall be to administer the PTW/LOTO Procedure throughout the Startup and Commissioning phase of the project, through substantial completion and acceptance by the Owner. The PTW/LOTO Manager shall also be responsible to approve Permit Holders and to educate and train personnel as required by the procedure, to ensure adherence and compliance with the procedure.
4. All Contractor Startup personnel shall be qualified in administering and issuing of PTW's (Permit to Work) and LOTO's (Lock Out/Tag Out). This shall also ensure 24/7 coverage during major activity and Operational phase(s) of Commissioning. ALL personnel at the facility shall be required to adhere to the Contractor's Policy including all subcontractors and Owners 'personnel. WPC policy is ZERO Tolerance for PTW/LOTO violations and disciplinary action shall result.

G. Provide all temporary measures, test equipment and other materials and equipment required for testing and startup NOT provided by Owner (see 3.06.A – Owner Provided, below). All such equipment is to be provided with current calibrations.

H. Provide Subcontractor and equipment manufacturers' staff adequate to prevent delays. Manufacturers staff provided by Owner is described elsewhere in these Specifications. Schedule ongoing work so as not to interfere with or delay testing and startup.

I. In the event of any delays or unexpected issues, including delays due to unforeseen circumstances, the responsible Contractor shall communicate these issues promptly during regular coordination meetings or sooner. Additionally, a recovery plan shall be discussed and implemented as needed to mitigate the impact of these delays and ensure the Project stays on track.

3.02 CONSTRUCTION COMPLETIONS

A. Construction Completions is the last major activity and milestone achieved by construction and includes all necessary installation and fabrication checks to

prove equipment has been constructed and installed correctly and in accordance with Drawings, Specifications, applicable statutory codes and practices. Construction Completions includes all necessary documentation, certification, verification and checks prior to declaring the system Ready for Commissioning.

B. Construction Completions checks are single discipline and non-energized / non-pressurized, except for strength testing and insulation testing.

C. Electrical, Mechanical and Instrumentation Construction Completions checks are performed during the Construction Phase and witnessed by the Commissioning Agent and Owner as required to ensure a high degree of confidence in the process and facilitate simple and seamless handover.

D. Owner provided equipment shall be supplied with instrumentation and controls calibrated from the factory and good for one year. It is anticipated that most, or all, equipment calibrations shall be out-of-date by the time Contractor is ready to begin commissioning. Contractor is required to re-test/calibrate all instrumentation and controls and to provide Owner Calibration record.

E. Construction Completion Dossiers:

1. Construction Completions documentation including Inspection Test Plans (ITP's) and Inspection Test Records (ITR's) are to be compiled by Separable Portion and Functional System into Construction Completions Dossiers. The content of Construction Completions Dossiers shall be developed by the Commissioning Agent (with support from Construction) and be in general accordance with the following guideline:
2. System Boundary Definition and Description,
3. P&ID / Single Line Markup,
4. Equipment List / Valve List / Instrumentation List,
5. Electrical Cable Schedule,
6. Electrical Control System Input/Output List,
7. Other/TBD Lists,
8. System Instrumentation and Control Setpoint List,
9. Electrical Cable Pull Ticket(s),
10. Construction QC Records - Construction QC Records such as, but not limited to, Special Inspections for rebar, concrete placement, structural steel, and weld inspection records are to be performed and documented in accordance with the applicable Specifications.
11. ITP's - Inspection and Test Plans for activities such as leak-testing, hydro-testing, meggar-testing, point-to-point wire checking, calibrations and similar. Als to include validation of installation against OEM requirements.
12. ITR's - Inspection and Test Records documenting the results of ITP's.

13. As-Built Red-Lines – Drawing mark-ups detailing any and all deviations from plans and Specifications. These may be provided electronically. The Contractor is responsible for obtaining approval and communicating deviations and reporting during regular coordination meetings. In addition, the Contractor is responsible for incorporating any redlines into the Final As-Built Drawings.
14. Punchlist.

3.03 UNIT (EQUIPMENT) COMMISSIONING AND FUNCTIONAL TESTING

A. When all Equipment in a Separable Portion or Functional System is fitted, installed and checked as per the allocated Construction Completions Inspection Test Plans and Inspection and Test Records are complete, the Equipment/Functional System is ready to be handed over from the Construction Phase to the Commissioning Agent.

B. To ensure safety and consistent communications, the Contractor shall prepare a Ready for Commissioning Certificate, complete with a punchlist report of outstanding punchlist items in the Functional System (no Safety Related Punchlist Items may remain open), as well as the full Construction Complete Dossier, for Commissioning Agent and Owner approval. The Owner will review the entire Construction Complete Dossier before granting approval for the Ready for Commissioning Certification. All safety-related punchlist items, shall be resolved and approved by SWBNO prior to certification.

C. Acceptance of the Ready for Commissioning Certificate indicates that Care, Custody and Control of all equipment in the Functional System has passed from Construction to Commissioning, and any further works performed by Construction on the equipment, including punchlist clearance shall be performed under the control of the Commissioning Agent, and Contractors Permit to Work system.

D. Upon acceptance of a Functional System from Construction, Equipment Commissioning can begin. The commissioning testing is the first time at which equipment becomes energized or pressurized and is to be in accordance with OEM requirements. Inspection and Test Record sheets are developed and assigned to individual pieces of equipment by the Commissioning Agent.

E. The Commissioning Agent shall be responsible to coordinate OEM support through the Owner including ensuring contracted OEM services are not exceeded. Refer to individual Specifications and 01.01.14 Commissioning Register for OEM services provided by Owner.

F. Inspection and Test Plans (ITP's) define the exact scope of work that shall be performed on every pre-defined item of equipment (i.e. Unit) including packages (i.e. Fuel Gas Compressor, SFC). Inspection and Test Records (ITR's) shall be completed in the field during the time of testing, with all test values, results and readings recorded on the original Commissioning Test

Record Form. Where practical the ITR's shall contain expected values and acceptance criteria prior to performing the commissioning test.

G. Testing shall be conducted as specified in individual Specification sections.

H. Preparation:

1. Complete installation before testing.
2. Contractor shall furnish qualified manufacturers' representatives, when required by individual Specification sections for Contractor purchased equipment and shall coordinate OEM support for Owner provided equipment.
3. Contractor obtain and submit from equipment manufacturer's representative Manufacturer's Certificate of Compliance, in accordance with Section 01 43 33, Manufacturers' Field Services, when required by individual Specification sections.
4. Inspection and Test Report Form: Provide written test report for each item of equipment to be tested, to include the minimum information:
    a. Owner/Project Name.
    b. Equipment or item tested.
    c. Date and time of test.
    d. Type of test performed (Functional or Performance).
    e. Test method (Reference Test Standards).
    f. Test conditions.
    g. Test results (Explicit Pass/Fail Conditions).
    h. Calibrated testing tools used.
    i. Signature spaces for Contractor and Owner as witness.
5. Cleaning and Checking: Prior to beginning functional testing:
    a. Calibrate testing equipment in accordance with manufacturer's instructions.
    b. Inspect and clean equipment, devices, connected piping, and structures to ensure they are free of foreign material.
    c. Lubricate equipment in accordance with manufacturer's instructions.
    d. Turn rotating equipment by hand when possible to confirm that equipment is not bound.
    e. Open and close valves by hand and operate other devices to check for binding, interference, or improper functioning.
    f. Check power supply to electric powered equipment for correct voltage.
    g. Adjust clearances and torque.
    h. Perform torque checks (where applicable).
    i. Test piping for leaks.
6. Ready-to-test determination shall be by Commissioning Agent based at least on the following:
    a. Acceptable Operation and Maintenance Data.
    b. Notification by Contractor of equipment readiness for testing.

c. Receipt of Manufacturer's Certificate of Proper Installation, if so specified.
d. Adequate completion of work adjacent to, or interfacing with, equipment to be tested.
e. Availability and acceptability of manufacturer's representative, when specified, to assist in testing of respective equipment.
f. Satisfactory fulfillment of other specified manufacturer's responsibilities.
g. Equipment and electrical tagging complete.
h. Delivery of all spare parts and special tools. While the delivery of spare parts can occur after testing, consumables, and special tools essential for testing shall be readily available to ensure a smooth and efficient testing process.

I. Functional Testing:

1. Conduct as specified in individual Specification sections.
2. Notify Owner in writing at least 10 days prior to scheduled date of testing.
3. Prepare Inspection and Test Report summarizing test method and results.
4. When, in Commissioning Agent's opinion, equipment meets functional requirements specified, such equipment shall be accepted for purposes of advancing to performance testing phase, if so required by individual Specification sections. Such acceptance shall be evidenced by Owner's signature as witness on Inspection and Test Report.

J. Commissioning and Testing Dossier:

1. Unit (Equipment) Commissioning and Functional Test Records and Operational Test Records shall be compiled with all other commissioning records by Equipment/Functional System into Commissioning Dossiers. The content of Commissioning dossiers shall be developed by the Commissioning Agent and, in general, shall include:
   a. System Boundary Definition and Description,
   b. P&ID / Single Line Markup,
   c. Equipment List / Valve List / Instrumentation List,
   d. Electrical Cable Schedule,
   e. Electrical Control System Input/Output List,
   f. System Instrumentation and Control Setpoint List,
   g. Inspection and Test Plans (ITP's) and Records (ITR's),
   h. As-Built Red-Lines – Drawing mark-ups detailing any and all deviations from plans and Specifications. These may be provided electronically.
   i. Punchlist.

3.04 FACILITY STARTUP AND PERFORMANCE TESTING

A. Prior to operating unit/system startup, equipment within unit/system shall be accepted by Owner as having met functional and performance testing requirements specified.

B. Startup sequencing of operating unit/system shall be as identified by Commissioning Agent and coordinated with the Owner within the Facility Startup Plan in order to meet schedule requirements and comply with Contract milestones and completion dates.

C. Facility Startup and Performance Testing (Operational Testing):

1. Once Commissioning testing is completed, Facility Startup and Performance Testing (Operational Testing) may commence. Operational testing proves the functionality of utilities and systems to the full requirements as detailed in this specification package including Manufacturer guarantees for separable portions. Final performance testing of equipment is to be performed during this phase of start-up when operational loads and fluctuations are present. Where operational loads shall be simulated, the simulation shall be part of the Operational Test Procedure.
2. Demonstrate proper operation of required interfaces within and between individual unit processes.
3. After facility is operating, complete performance testing of equipment and systems not previously tested.
4. Document, as defined in Facility Startup and Performance Demonstration Plan, the complete and overall performance of the facility and all related systems, subsystems, components, ancillary elements, and anything associated with operation of said.
5. Operational Test Procedures (OTP's)
    a. The Contractor shall develop Operational Test Procedures which are a detailed description of each operational test by Functional System and the Facility. As well as providing the test methodology, the operational Test Procedures shall list the observations and readings to be recorded, the acceptance criteria for the equipment under test and the expected result of each test.
    b. Operational Test Procedures shall be developed such that the required results and acceptance criteria are documented, with operating instructions coming from the OEM and Use Cases. The only exceptions to this shall be for special operation methodology required to test a particular function. This allows test procedures to be consistent with operating manuals while allowing the field practicality of the operating manuals to be reviewed.
    c. Operational Test Procedures shall be approved by Owner prior to use and all testing performed under the Operational Test Procedures shall be witnessed by Owner personnel.

d. Operational Test Procedures shall be completed in the field during the time of testing, with all test values results and readings recorded on the original document. Results shall be recorded for all testing performed.
e. Operational Test Certificate: Upon completion of the Operational Test Procedure, a certificate is issued by Commissioning Agent signifying that the Functional System is complete and operates as per design intent and Acceptance Criteria.

6. Operational Performance Testing:
   a. Conduct as specified in individual Specification sections.
   b. Notify Owner in writing at least 10 days prior to scheduled date of test.
   c. Performance testing shall not commence until equipment has been accepted by Owner as having satisfied functional test requirements specified.
   d. Type of fluid, gas, or solid for testing shall be as specified.
   e. Unless otherwise indicated, furnish labor, materials, and supplies for conducting the test(s) and taking samples and performance measurements.
   f. Prepare Inspection and Test Report summarizing test method and results.
   g. When, in Owner's opinion, equipment meets performance requirements specified, such equipment shall be accepted as to conforming to Contract requirements. Such acceptance shall be evidenced by Owner's signature on Contractor's Operational Test Certificate.

3.05 INTEGRATED FACILITY TESTING

A. Once all equipment has been commissioned, started-up and OEM guarantees tested, The Commissioning Agent is to establish a test program to validate Facility Operations to all Use Cases as defined in Specification 40.90.13, Concept of Operations Framework including those Use Cases developed during the Project as specified herein. In addition, the Commissioning Agent shall submit the test program to the Owner for their review as an integral part of this process. As with the previous Commissioning iteration. Integrated Facility Test Procedures and Integrated Facility Test Records are to be prepared and provided to Owner as part of the Commissioning Dossier.

B. When, in the opinion of Owner, startup of all operating units/systems has been achieved and each operating unit/system to the point that facility is operational. such equipment shall be accepted as to conforming to Contract requirements and handed over to Owner's Operations Team. Such acceptance shall be evidenced by Owner's signature on Contractor's Handover Certificate.

3.06 SUPPLEMENTS

A. The supplement listed below, following "End of Section," is part of this Specification.

1. Commissioning Register.

END OF SECTION

INTENTIONALLY LEFT BLANK

SECTION 03 60 00
STRUCTURAL AND EQUIPMENT GROUTING

PART 1 GENERAL

1.01 SCOPE

A. This Specification shall govern the furnishing, storing, and installing of grout. The Work may include, but not be limited to, the following:

1. Grouting steel column base plates, equipment and pipe support bases, and sleeved anchor bolts.
2. Grouting anchor bolts, reinforcing bars, and dowels into existing concrete.

B. Section Includes:

1. High performance, prepackaged, nonshrink, cementitious, mineral aggregate grout.
2. Prepackaged, nonshrink epoxy grout.

C. Where original equipment manufacturer (OEM) requirements differ from this Specification, OEM requirements shall govern.

1.02 REFERENCES

A. The following is a list of standards which may be referenced in this section:

1. American Society for Testing and Materials (ASTM) Standards:
   a. C109/C109M, Standard Test Method for Compressive Strength of Hydraulic Cement Mortars (Using 2-inch [or 50-mm] Cube Specimens).
   b. C191, Standard Test Methods for Time of Setting of Hydraulic Cement by Vicat Needle.
   c. C307, Standard Test Method for Tensile Strength of Chemical-Resistant Mortar, Grouts, and Monolithic Surfacings.
   d. C579, Standard Test Methods for Compressive Strength of Chemical-Resistant Mortars, Grouts, Monolithic Surfacings, and Polymer Concretes.
   e. C580, Standard Test Method for Flexural Strength and Modulus of Elasticity of Chemical-Resistant Mortars, Grouts, Monolithic Surfacings, and Polymer Concretes.
   f. C827, Standard Test Method for Change in Height at Early Ages of Cylindrical Specimens of Cementitious Mixtures.
   g. C882/C882M, Standard Test Method for Bond Strength of Epoxy-Resin Systems Used with Concrete by Slant Shear.

h. C942, Standard Test Method for Compressive Strength of Grouts for Preplaced Aggregate Concrete in the Laboratory.
i. C1090, Standard Test Method for Measuring Changes in Height of Cylindrical Specimens of Hydraulic-Cement Grout.

1.03 SUBMITTALS

A. Action Submittals:

1. Product data of grouts.
2. Proposed method for keeping existing concrete surfaces wet prior to placing grout.
3. Forming method for fluid grout placements.
4. Curing method for grout.

1.04 GUARANTEE

A. Manufacturer's guarantee shall not contain disclaimer on the product data sheet, grout bag, or container limiting responsibility to only the purchase price of products and materials furnished.

B. Manufacturer shall guarantee participation with Contractor in replacing or repairing grout found defective as a result of faulty materials, as determined by industry standard test methods.

1.05 DELIVERY, STORAGE, AND HANDLING

A. Deliver grout in manufacturer's unopened containers with proper labels intact.

B. Store grout in a dry shelter, protect from moisture.

PART 2 PRODUCTS

2.01 MATERIALS

A. Mixing Water:

1. Potable; containing no impurities, suspended particles, algae or dissolved natural salts in quantities capable of causing:
   a. Corrosion of steel.
   b. Volume change increasing shrinkage cracking.
   c. Efflorescence.
   d. Excess air entraining.

B. Nonshrink Grout:

1. Nonshrink grout shall be a commercially available factory premixed, pre-bagged material which is composed primarily of Portland cement and natural mineral aggregates. Grout mix that contains corrosive iron, aluminum, expansive cement, gypsum or gas forming agents shall not be acceptable. The grout shall be nonshrink when tested in accordance with ASTM C827 and ASTM C1090.
2. Grout shall meet the following physical properties:
   a. Compressive Strength per ASTM C942 (C109 restrained):
      1) 24 hours 3,000 psi.
      2) 7 days 5,000 psi.
      3) 28 days 7,000 psi.
   b. Bond Strength per ASTM C882: Minimum 2,000 psi at 28 days.
3. The manufacturer's recommendations for mixing and placing shall be printed on the outside of each bag. The grout shall not require vertical confinement or capping.
4. Nonshrink grout shall show no vertical shrinkage (0.0 percent) in the plastic state when tested to ASTM C827 or hardened state when tested to ASTM C1090, and a maximum expansion of 0.3 percent horizontal in the hardened state.
5. Do not use ferrous aggregate or staining ingredients in grout mixes.
6. Acceptable products and manufacturers:
   a. "Hi-Flow or NS Grout" by Euclid Chemical Co.
   b. "Five Star Fluid Grout 100" by Five Star Products, Inc.
   c. "Masterflow 928" by BASF Building Systems.
   d. "Sikagrout 212" by Sika Corporation
   e. "588-10K Grout" by W.R. Meadows
   f. ""1107 Advantage Grout" by Dayton Superior

C. Epoxy Grout:

1. Epoxy grout shall be delivered in pre-packaged units composed of the liquid and aggregate components of the epoxy system. The liquid components shall contain no solvent volatile materials.
2. Grout shall meet the following physical properties:
   a. Compressive Strength per ASTM C579 modified:
      1) 24 hours 8,000 psi.
      2) 7 days 12,000 psi.
      3) 28 days 14,000 psi.
   b. Tensile Strength per ASTM C307: Minimum 2,000 psi.
   c. Flexural Strength per ASTM C580: Minimum 3,500 psi.
   d. Bond to Concrete: Shall test to failure within the concrete not on bond line, minimum concrete strength 4,000 psi.
3. Acceptable products and manufacturers:
   a. "E^3-HP" by Euclid Chemical Co.
   b. "Five Star HP Epoxy Grout" by Five Star Products, Inc.

c. "Masterflow 648 CP" by BASF Building Systems.

2.02 DELIVERY, STORAGE, HANDLING, AND SUBMITTALS

A. Materials shall be delivered in the original packaging, clearly labeled with the manufacturer's name, kind and name of product, batch number, date and place of manufacture and instructions of use.

B. Nonshrink cement-based grout and epoxy grout aggregate shall be delivered in sound dry bags and epoxy grout liquid components in sealed containers. Grout shall be stored in a dry, weatherproof area and within the temperature range recommended by the manufacturer.

C. Any material, which becomes damp or otherwise defective shall be immediately removed from the site and disposed of at no expense to the Owner.

2.03 PROPORTIONING AND MIXING

A. Nonshrink Grout:

1. Grout shall be prepared in strict accordance with the manufacturer's recommendations. Mixing shall be with a mechanical mortar mixer. Hand mixing shall not be permitted. Grout shall be mixed as near as possible to the location being grouted.
2. The grout components shall be conditioned for 24 hours prior to mixing to the temperature specified by the grout manufacturer to produce the best results.
3. Water shall be accurately measured or weighed and shall be added slowly to assure efficient mixing and to obtain the desired consistency. Mixing shall be as recommended by the manufacturer, using the least amount of water that shall ensure proper placement.
4. Locations requiring a fluid grout to flow long distances or into obstructed locations shall use a grout material designed to be placed at fluid consistency and the material shall not segregate or exhibit bleed water. Water added shall not exceed the maximum water addition as noted by the grout manufacturer. Mix quantities shall not exceed that rated volume of the mortar mixer. Concrete mixers or rotating barrel type mixers shall not be used for mixing grout.
5. Retempering shall not be allowed. Grout that has stiffened due to delay in placing shall be discarded.
6. The cured grout shall develop a minimum compressive strength of 5,000 psi at 7 days, and 7,000 psi at 28 days. Specimens shall be molded, cured, and tested in accordance with ASTM C109.

B. Epoxy Grout: Proportioning and mixing of epoxy grout shall be in strict accordance with the manufacturer's instructions.

PART 3 EXECUTION

3.01 USE AND LOCATION

A. Unless modified by equipment manufacturer's recommendations, grouting for sole plates, jacking plates, and other similar devices for equipment shall be accomplished using nonshrink cement-based grout.

B. Grouting of rotating machinery, pumps, compressors, and other rotating equipment having dynamic operating forces shall be in strict compliance with the equipment manufacturer's recommendations, using either nonshrink cement-based or epoxy grout, as determined by the equipment manufacturer, and as specified on the Contract Drawings. If rotating (dynamic) equipment manufacturer does not provide a grout type recommendation then epoxy type grout shall be used.

C. Grouting for tanks and vessels may be flowable nonshrink grout as approved by the Engineer.

D. All column base plates shall be grouted with pre-bagged nonshrink grout, meeting the requirements of this Specification.

E. Epoxy grout used for anchoring reinforcing bars, dowels, and anchor bolts into existing concrete shall meet all current industry standards and engineered for such applications.

F. The Contractor shall obtain the Engineer's approval for specific grout applications other than above.

3.02 PREPARATION FOR INSTALLATION

A. Preparation of Surfaces:

1. Concrete Surfaces:
    a. All concrete surfaces, which shall be in contact with grout for column base plates and equipment bases, shall be chipped as necessary to remove all laitance, unsound concrete, oil or grease stained concrete, and shall be roughened to provide for good bonding. The resulting concrete surface shall be free of dust or loose particles with the aggregate exposed.
    b. Concrete surfaces prepared as in paragraph (a) above which shall be in contact with grout, other than epoxy grout, shall be saturated with water and kept constantly wet by means of water-soaked burlap, fog spray, or other approved means, for a period of not less than 24 hours prior to placement of grout. During placement of grout, the wetted concrete surfaces which shall be in contact with grout shall be kept wet, but free from excess water.

c. When recommended by the grout manufacturer, concrete surfaces shall be warmed or cooled to temperatures specified for best results.

2. Metal Surfaces:
   a. Metal surfaces which shall be in contact with nonshrink or dry-pack grout shall be cleaned of oil, grease, dust, and loose material and shall be at temperatures specified.
   b. Reinforcing bars, dowels, and anchor bolts which are to be epoxy grouted, shall be sandblasted to white metal and shall be clean, dry, and at temperatures specified.

B. Holes in Concrete: Holes drilled in hardened concrete for epoxy grouting of anchor bolts, reinforcing bars, and dowels shall be drilled with a rotary impact drill to a diameter 1/8-inch greater than the item to be installed in the hole. The hole shall be cleaned with water to remove concrete dust and then dried. Do not use compressed air to dry the hole unless it is oil-free air. The hole shall be clean and dry prior to introduction of the epoxy.

C. Annular Space at Anchor Bolt Sleeve: Cast-in-place anchor bolts shall often be provided with pipe sleeves to facilitate some adjustment of the bolt. The sleeve shall be carefully cleaned of all debris, dried and protected from the entry of any foreign material until the equipment or base plate is in place. The pipe sleeve shall be grouted prior to grouting the equipment or base plate.

D. Forms:

1. Forms for flowable grout shall conform to the grout manufacturer's recommendations. The method of forming shall permit rapid and complete filling of the space to be grouted, and shall keep the grout in full contact with the underside of the base plate until the grout has hardened. Forms shall be strong, tight, and braced such that they shall not leak or buckle under the weight of the flowable grout.
2. On the side where grout is to be placed, at least 4 inches shall be allowed for the use of a head-box; the head-box shall be slanted at a 45-degree angle, and the grout shall be placed directly on the slanted face and allowed to flow under the base plate.
3. On all other sides, the Contractor shall provide not less than 2 inches for the head of grout. Forms shall be caulked to prevent leakage and loss of head. Forms shall be treated with an approved wax or oil before grout placement to prevent bonding to the grout.

3.03 PLACING—NONSHRINK GROUT

A. General:

1. Unless otherwise permitted by the grout manufacturer and approved by the Engineer, grout shall not be placed when the temperature at the foundation, base plates, equipment, or grout is below 40 degrees F or above 90 degrees F. When necessary, temperatures shall be established and maintained by use of heated enclosures or by the use of sunshades, fans, water sprinkling, water soaked burlap or other Engineer-approved methods. In no event shall grout be placed at a higher or lower temperature than recommended by the grout manufacturer.
2. Grout shall not be placed until the item to be grouted is in final position and fastened. Items of equipment and columns shall have been brought to proper elevation and alignment, leveled or plumbed as applicable, and anchor bolts tightened.

B. Nonshrink Grouting:

1. Grout shall be poured from one side only to avoid entrapping air. Provisions shall be made in advance to relieve entrapped air from beneath foundation plates.
2. Grout shall be placed quickly and continuously to avoid undesirable effects of overworking, which results in segregation, bleeding, and disturbing initial set.
3. Doubled pieces of flexible steel strapping shall be used for rodding the grout beneath the base plate. The strapping shall be moved slowly back and forth to help flow the grout into place and to assure that air entrapment is minimized.
4. Unless permitted by the manufacturer, grout shall not be vibrated. Adjacent operating machinery, if any, shall be shutdown until the grout takes its initial set.
5. As placing progresses and the space becomes filled with grout, measures shall be taken to keep the grout in full contact with the underside of the base plate until the grout has hardened. A 6-inch head shall be maintained in the form by the use of additional grout or by weighting the grout.
6. For large base plates, the grout may be placed using standpipes or a grout pump through center holes, if provided by manufacturer. No holes shall be drilled in OEM base plates without the written consent of the Engineer. Continuous flow of the grout under this pressure grouting method is imperative; and air relief holes shall be provided at the high point of each section. Prior to commencing the grouting, the Contractor shall obtain from the Engineer written approval of the grouting procedure.
7. Do not remove leveling shims for at least 48 hours after grout has been placed.

3.04 PLACING—EPOXY GROUT

A. Epoxy Grouting: Application of epoxy grout shall be in strict conformance to the manufacturer's recommendations. Surfaces to be exposed to the epoxy shall be clean, dry, and sound before application.

3.05 FINISHING, CURING, AND PROTECTING

A. Edge Finish:

1. Nonshrink Grout: Nonshrink grout shall be finished in accordance with the manufacturer's recommendations. Unless otherwise directed by the Engineer or shown on the Drawings. Cement grout shall be cut back at a 45-degree chamfer when the grout reaches the plastic state.
2. Epoxy Grout: Areas shall be cleaned of excess grout and troweled or ground to a smooth finish to match the surrounding concrete.

B. Curing and Protection: During the curing period, grouted equipment shall not be operated nor shall grouted base plates of structural steel be subjected to lateral forces. Immediately after placement, protect grout from premature drying, excessively hot or cold temperatures, and mechanical injury.

1. Nonshrink Grout: Grout shall be cured in accordance with manufacturer's recommendations. Unless otherwise permitted by the Engineer, the grout shall be cured for a minimum of 7 days at temperatures of 50 degrees F to 80 degrees F.
2. Epoxy Grout: Epoxy grout shall be cured in accordance with manufacturer's recommendations.

3.06 SAMPLING AND TESTING

A. Testing Agency:

1. Throughout periods of grouting, the sampling and testing necessary to verify suitability of materials and the grout mixture, and adequacy of the in-place grout, shall be determined by the Owner's independent testing laboratory.
2. The Contractor shall permit the testing personnel unrestricted access to delivered or stored materials and to batching and mixing facilities. The Contractor shall provide such cooperation and assistance as may be required.
3. The Owner's independent testing representatives shall report test results together with their recommendations for acceptance or rejection, and their recommendations for improvement or corrective measures to the Engineer.

B. Sampling and Testing Methods:

1. The Owner's independent testing representative shall perform the testing per code and submit test results to the Engineer for approval.
2. The following tests shall be conducted for nonshrink grout.
   a. Compressive strength shall be tested according to ASTM C109/C109M.
   b. Plastic shrinkage shall be tested according to ASTM C827.
   c. Hardened shrinkage and expansion shall be tested according to ASTM C1090.
   d. Initial setting time shall be tested according to ASTM C191.
3. The following tests shall be conducted for epoxy grout. Compressive strength shall be tested according to ASTM C579.

C. Evaluation and Acceptance of Nonshrink Grout:

1. Independent testing laboratory shall prepare, store, cure, and test cubes in accordance with ASTM C109/C109M. Frequency of field testing of grout shall be at least one test set, consisting of three cubes, representing each batch of grout prepared and installed, and at the age of 7 and 28 days, minimum.
2. Nonshrink grout cubes shall test equal to or greater than minimum strength specified.
3. Strength Test Failures: Nonshrink grout work failing strength tests shall be removed and replaced.
4. Perform bleeding test to demonstrate grout shall not bleed.
5. Store cubes at 70 degrees F.

END OF SECTION

INTENTIONALLY LEFT BLANK

SECTION 05 00 10
STRUCTURAL SUMMARY OF WORK

PART 1 GENERAL

1.01 STRUCTURAL

A. The West Power Complex (WPC) Group 3 Project is a portion of the overall WPC Project, which includes Contract 1444, Fuel Oil Delivery System. The structural scope of work (the "Work") consists of the supply and installation of the steel platform and access steel within the fuel oil bulk tank containment area. The platform shall house the fuel oil forwarding pump skid that is being supplied by C1444.

B. Structural work in Contract C1444 shall include, but not be limited to, the following areas as detailed on the Contract Drawings.

1. Supply and erection of the fuel oil forwarding pump skid platform, including but not limited to structural steel, anchor bolts, grouting, access ladder, grating, and handrail.

C. Related Sections:

1. Section 01 31 13, Project Coordination
2. Section 01 33 00, Submittal Procedures.
3. Section 01 61 00, Common Product Requirements.
1. Section 01 88 15, Anchorage and Bracing.
2. Section 03 10 00, Concrete Forming and Accessories.
3. Section 03 30 00, Cast in Place Concrete.
4. Section 03 60 00, Structural and Equipment Grouting.
5. Section 05 05 19, Post-Installed Anchors.
6. Section 05 05 23, Welding.
7. Section 05 10 00, Erection of Structural and Miscellaneous Steel.
8. Section 05 12 00, Supply, Fabrication of Structural and Miscellaneous Steel.
9. Section 05 52 19, Steel Railings.
10. Section 05 53 00, Metal Gratings.
11. Section 09 90 01, Painting and Protective Coatings.

1.02 CONSTRUCTION CONSIDERATIONS

A. The existing bulk fuel oil tank foundation contains pre-stressed concrete piles and grade beams. Contractor to review Contract 1369 as-built drawings (see Volume 4 Reference Information) and confirm locations before installing anchor bolts for the new structural steel.

B. Special attention shall be given during installation to coordinate with the existing site drawings and verify the location of existing obstructions.

C. The equipment and systems in Work are complex and require close coordination with other disciplines and contract tasks for installation and scheduling.

PART 2 PRODUCTS (NOT USED)

PART 3 EXECUTION

3.01 GENERAL

A. Testing and inspection shall conform to the requirements included in each applicable Specification section.

B. Construction sequencing is extremely important for this Project. A detailed schedule including line items for material supply and delivery, installation, construction, and testing shall be provided in accordance with Section 01 31 13, Project Coordination.

END OF SECTION

SECTION 05 05 19
POST-INSTALLED ANCHORS

PART 1 GENERAL

1.01 REFERENCES

A. The following is a list of standards which may be referenced in this section:

1. American Concrete Institute (ACI):
   a. 318, Building Code Requirements for Structural Concrete.
   b. 355.2, Qualification of Post-Installed Mechanical Anchors in Concrete.
   c. 355.4, Qualification of Post-Installed Adhesive Anchors in Concrete.
2. American Iron and Steel Institute (AISI): Stainless Steel Type 316.
3. American National Standards Institute (ANSI).
4. ASTM International (ASTM):
   a. A123/A123M, Specification for Zinc (Hot-Dip Galvanized) Coatings on Iron and Steel Products.
   b. A143, Practice for Safeguarding Against Embrittlement of Hot-Dip Galvanized Structural Steel Products and Procedure for Detecting Embrittlement.
   c. A153/A153M, Specification for Zinc Coating (Hot-Dip) on Iron and Steel Hardware.
   d. A193/A193M, Specification for Alloy-Steel and Stainless Steel Bolting Materials for High-Temperature Service.
   e. A194/A194M, Specification for Carbon and Alloy Steel Nuts for Bolts for High-Pressure or High-Temperature Service, or Both.
   f. A380, Practice for Cleaning, Descaling, and Passivation of Stainless Steel Parts, Equipment, and Systems.
   g. A385, Practice for Providing High-Quality Zinc Coatings (Hot-Dip).
   h. A563, Specification for Carbon and Alloy Steel Nuts.
   i. A780, Practice for Repair of Damaged and Uncoated Areas of Hot-Dip Galvanized Coatings.
   j. A967, Specification for Chemical Passivation Treatments for Stainless Steel Parts.
   k. E488, Standard Test Methods for Strength of Anchors in Concrete Elements.
   l. F436, Specification for Hardened Steel Washers.
   m. F468, Specification for Nonferrous Bolts, Hex Cap Screws, and Studs for General Use.
   n. F568M, Specification for Carbon and Alloy Steel Externally Threaded Metric Fasteners.

o. F593, Specification for Stainless Steel Bolts, Hex Cap Screws, and Studs.
p. F594, Specification for Stainless Steel Nuts.
q. F1554, Specification for Anchor Bolts, Steel, 36, 55, and 105-ksi Yield Strength.

5. International Association of Plumbing and Mechanical Officials Uniform ES (IAPMO-UES): Evaluation Reports for Concrete and Masonry Anchors.
6. International Code Council Evaluation Service (ICC-ES):
   a. Evaluation Reports for Concrete and Masonry Anchors.
   b. AC01, Acceptance Criteria for Expansion Anchors in Masonry Elements.
   c. AC70, Acceptance Criteria for Fasteners Power-driven into Concrete, Steel and Masonry Elements.
   d. AC106, Acceptance Criteria for Predrilled Fasteners (Screw Anchors) in Masonry Elements.
   e. AC193, Acceptance Criteria for Mechanical Anchors in Concrete Elements.
   f. AC308, Acceptance Criteria for Post-Installed Adhesive Anchors in Concrete Elements. Evaluation Reports for Concrete and Masonry Anchors.
7. Specialty Steel Industry of North America (SSINA):
   a. Specifications for Stainless Steel.
   b. Design Guidelines for the Selection and Use of Stainless Steel.
   c. Stainless Steel Fabrication.
   d. Stainless Steel Fasteners.

1.02 DEFINITIONS

A. Corrosive Area: Containment area or area exposed to delivery, storage, transfer, or use of chemicals.

B. Exterior Area: Location not protected from weather by a building or other enclosed structure to include buried roof structures.

C. Interior Dry Area: Location inside building or structure where floor is not subject to liquid spills or wash down, and where wall or roof slab is not common to a water-holding or earth-retaining structure.

D. Interior Wet Area: Location inside building or structure where floor is sloped to floor drains or gutters and is subject to liquid spills or wash down, or where wall, floor, or roof slab is common to a water-holding or earth-retaining structure.

E. Submerged: Location at or below top of wall of open water-holding structure, such as a basin or channel, or wall, ceiling, or floor surface inside a covered water-holding structure, or exterior below grade wall or roof surface of water-holding structure, open or covered.

1.03 SUBMITTALS

A. Action Submittals:

1. Shop Drawings: Specific instructions for concrete anchor installation, including drilled hole size and depth, preparation, placement, procedures, and instructions for safe handling of anchoring systems.

B. Informational Submittals:

1. Concrete Anchors:
   a. Manufacturer's product description and installation instructions.
   b. Current ICC-ES or IAPMO-UES Report for each type of post-installed anchor to be used.
   c. Adhesive Anchor Installer Certification.
2. Passivation method for stainless steel members.
3. Hot-Dip Galvanizing: Certificate of Compliance signed by galvanizer, with description of material processed and ASTM standard used for coating.

1.04 QUALITY ASSURANCE

A. Qualifications:

1. Installers of adhesive anchors horizontally or upwardly inclined to support sustained tension loads shall be certified by an applicable certification program. Certification shall include written and performance tests in accordance with the ACI/CRSI Adhesive Installer Certification Program or equivalent.
2. Galvanized Coating Applicator: Company specializing in hot-dip galvanizing after fabrication and following procedures of Quality Assurance Manual of the American Galvanizers Association.

1.05 DELIVERY, STORAGE, AND HANDLING

A. Package stainless steel items in a manner to provide protection from carbon impregnation.

B. Protect hot-dip galvanized finishes from damage as a result of metal banding and rough handling.

PART 2 PRODUCTS

2.01 GENERAL

A. Unless otherwise indicated, meet the following requirements:

Item	ASTM Reference
Stainless Steel:	
Threaded Rods	F593, AISI Type 316, Condition CW
Nuts*	F594, AISI Type 316, Condition CW
Carbon Steel:	
Threaded Rods	F1554, Grade 36 or F568M Class 5.8
Flat and Beveled Washers (Hardened)	F436
Nuts*	A194/A194M, Grade 2H
Galvanized Steel:	
All	A153/A153M
*Nuts of other grades and styles having specified proof load stresses greater than specified grade and style are also suitable. Nuts shall have specified proof load stresses equal to or greater than minimum tensile strength of specified threaded rod.	

B. Bolts, Washers, and Nuts: Use stainless steel, hot-dip galvanized steel, and zinc-plated steel material types as indicated in Fastener Schedule at end of this section.

2.02 POST-INSTALLED CONCRETE ANCHORS

A. General:

1. AISI Type 316 stainless, hot-dip galvanized or zinc-plated steel, as shown in Fastener Schedule at end of this section.
2. Post-installed anchor systems used in concrete shall be approved by ICC Evaluation Services Report or equivalent for use in cracked concrete and for short-term and long-term loads including wind and earthquake.
3. Mechanical Anchors: Comply with the requirements of ICC-ES AC193 or ACI 355.2.
4. Adhesive Anchors: Comply with the requirements of ICC-ES AC308 or ACI 355.4.
5. Expansion Anchors may be used only for Interior Dry Area applications.

B. Torque-Controlled Expansion Anchors (Wedge Anchors). Only allowed for Interior Dry Area applications.

1. Manufacturers and Products:
   a. Hilti, Inc., Tulsa, OK; Kwik-Bolt –TZ (KB-TZ) Anchors (ESR-1917).
   b. DeWalt/Powers Fasteners, Brewster, NY; Power-Stud +SD1, +SD2, +SD4, or +SD6 Anchors (ESR-2502 and ESR-2818).
   c. Simpson Strong-Tie Co., Inc., Pleasanton, CA; Strong-Bolt 2 Anchors (ESR-1771 and ESR-3037).

C. Undercut Anchors:

1. Manufacturers and Products:
   a. USP Structural Connectors, Burnsville, MN; DUC Undercut Anchor (ESR-1970).
   b. Hilti, Inc., Tulsa, OK; HDA Undercut Anchor (ESR-1546).
   c. Simpson Strong-Tie Co., Inc., Pleasanton, CA; TORQ-CUT Self-Undercutting Anchor (ESR-2705).
   d. DeWalt/Powers Fasteners, Brewster, NY; Atomic+ Undercut Anchor (ESR-3067).

D. Self-Tapping Concrete Screw Anchors:

1. Manufacturers and Products:
   a. DeWalt/Powers Fasteners, Brewster, NY; Wedge-Bolt+ (ESR-2526). Expansion anchors to only be used for indoor connections not exposed to water.
   b. DeWalt/Powers Fasteners, Brewster, NY; Vertigo+ Rod Hanger Screw Anchor (ESR-2989).
   c. DeWalt/Powers Fasteners, Brewster, NY; Snake+ Flush Mount Screw Anchor (ESR-2272).
   d. Hilti, Inc., Tulsa, OK; HUS-EZ Screw Anchor (ESR-3027).
   e. Simpson Strong-Tie Co., Inc., Pleasanton, CA; Titen HD Screw Anchor (ESR-2713).

E. Adhesive Anchors:

1. Threaded Rod:
   a. Diameter as shown on the Drawings.
   b. Length as required to provide minimum depth of embedment indicated and thread projection required.
   c. Clean and free of grease, oil, or other deleterious material.

2. Adhesive:
    a. Two-component, insensitive to moisture, designed to be used in adverse freeze/thaw environments.
    b. Cure Temperature, Pot Life, and Workability: Compatible for intended use and anticipated environmental conditions.
3. Packaging and Storage:
    a. Disposable, self-contained system capable of dispensing both components in proper mixing ratio and fitting into a manually or pneumatically operated caulking gun.
    b. Store adhesive on pallets or shelving in a covered storage area.
    c. Package Markings: Include manufacturer's name, product name, batch number, product expiration date, ANSI hazard classification, and appropriate ANSI handling precautions.
    d. Dispose of When:
        1) Shelf life has expired.
        2) Stored other than in accordance with manufacturer's instructions.
4. Manufacturers and Products:
    a. Hilti, Inc., Tulsa, OK; HIT Doweling Anchor System, HIT RE 500 V3 (ESR-3814), or HIT-HY 200-R V3 (ESR-3187).
    b. Simpson Strong-Tie Co., Inc., Pleasanton, CA; SET-3G Epoxy Adhesive Anchors (ESR-2508), or ET-3G Adhesive Anchors (IAPMO UES-263).
    c. DeWalt/Powers Fasteners, Brewster NY; Pure 110+ Epoxy adhesive anchor system (ESR-3298).

F. Adhesive Threaded Inserts:

1. Type 316 stainless steel, internally threaded inserts.
2. Manufacturer and Product: Hilti, Inc., Tulsa, OK; HIS-RN Insert with HIT-RE 500-V3 or HIT-HY 200 adhesive.

2.03 POST-INSTALLED MASONRY ANCHORS

A. General: AISI Type 316 stainless, hot-dip galvanized, or zinc-plated steel, as shown in Fastener Schedule at end of section.

B. Current ICC Evaluation Report indicating acceptance for anchors at structural applications in masonry.

C. Manufacturers and Products:

1. Hilti, Inc., Tulsa, OK; Kwik-Bolt-3 (KB-3) (ESR-1385), for grout-filled masonry, HIT-HY 70 (ESR-2682) for grout filled CMU, hollow CMU, or unreinforced masonry.

2. Simpson Strong-Tie Co., Inc., Pleasanton, CA; Strong-Bolt 2 (IAPMO ER 240) for grout filled CMU, Titen-HD (ESR-1056) for grout filled or hollow CMU, AT-XP (IAPMO ER-281) for grout filled CMU.
3. DeWalt/Powers Fasteners, Brewster NY; Power-Stud+ SD1 (ESR-2966) for grout-filled masonry, Wedgebolt+ (ESR-1678) for grout-filled masonry. Expansion anchors to only be used for indoor connections not exposed to water.

PART 3 EXECUTION

3.01 CONCRETE ANCHORS

A. Begin installation only after concrete to receive anchors has attained design strength.

B. Locate existing reinforcing with Ground Penetrating Radar or other method approved by Engineer prior to drilling. Coordinate with Engineer to adjust anchor locations where installation would result in hitting reinforcing.

C. Install in accordance with written manufacturer's instructions.

D. Provide minimum embedment, edge distance, and spacing as indicated on the Drawings.

E. Use only drill type and bit type and diameter recommended by anchor manufacturer.

F. Clean hole of debris and dust per manufacturer's requirements.

G. When unidentified embedded steel, rebar, or other obstruction is encountered in drill path, slant drill to clear obstruction. If drill must be slanted more than indicated in manufacturer's installation instructions to clear obstruction, notify Engineer for direction on how to proceed.

H. Adhesive Anchors:

1. Unless otherwise approved by Engineer and adhesive manufacturer:
    a. Do not install adhesive anchors when temperature of concrete is below 40 degrees F or above 100 degrees F.
    b. Do not install prior to concrete attaining an age of 21 days.
    c. Remove any standing water from hole with oil-free compressed air. Inside surface of hole shall be dry.
    d. Do not disturb anchor during recommended curing time.
    e. Do not exceed maximum torque as specified in manufacturer's instructions.

I. Prestressed Concrete: Do not use drilled-in anchors in prestressed or post-tensioned concrete members without Engineer's prior approval unless specifically shown on the Drawings.

J. Expansion Anchors may be used only for Interior Dry Area applications.

3.02 FIELD QUALITY ASSURANCE AND QUALITY CONTROL

A. Owner-Furnished Quality Assurance, in accordance with IBC Chapter 17 requirements, is provided in the Statement of Special Inspections Plan on the Drawings or in Supplement located at end of Section 01 45 33, Special Inspection, Observation, and Testing. Contractor responsibilities and related information are included in Section 01 45 33, Special Inspection, Observation, and Testing.

B. Contractor-Furnished Quality Control: Inspection and testing as required in Section 01 45 16.13, Contractor Quality Control.

C. Proof Loading:

1. To be performed where continuous inspection of anchors is required.
2. Testing shall be performed by Owner's Independent Testing Agency.
3. Proof loading of adhesive anchors to be performed only after adhesive has achieved proper cure per manufacturer's requirements.
4. Testing shall be conducted on minimum of 10 percent of installed anchors, with a minimum of two tension tests.
5. Testing shall be conducted in accordance with ASTM E488 and as follows:
    a. Performance of a static tension test of each test anchor.
    b. Test apparatus reaction base shall not interfere with bond failure of anchor, but shall preclude a pullout cone failure.
    c. Each test anchor to be tested at a proof load equal to the lesser of 80 percent of the yield strength of the anchor or 50 percent of calculated ultimate load based on adhesive bond strength or as directed by Engineer.
    d. Test load to be maintained for a minimum of 30 seconds without visible signs of movement of anchor or drop in gauge reading.
6. Failure of anchor or failure within base material shall cause anchor to be rejected. For each rejected anchor, test two additional anchors. Rejected anchors shall be replaced as approved by Engineer.

3.03 MANUFACTURER'S SERVICES

A. Adhesive and Mechanical Anchors: Conduct Site training of installation personnel for proper installation, handling, and storage of adhesive anchor system. Notify Engineer of time and place for sessions.

3.04 FASTENER SCHEDULE

A. Unless indicated otherwise on the Drawings, provide fasteners as follows:

Service Use and Location	Product	Remarks
1. Post-Installed Anchors for Metal Components to Cast-in-Place Concrete (such as, Ladders, Handrail Posts, Electrical Panels, Platforms, and Equipment)		
Submerged, Exterior, Interior Wet, and Corrosive Areas	Hot-dip galvanized anchors	Verify product acceptability and manufacturer's requirements if anchor installation shall occur in an overhead application
2. All Others		
All service uses and locations	Hot-dip galvanized	

B. Antiseizing Lubricant: Use on all stainless steel threads.

C. Do not use adhesive anchors to support fire-resistive construction or where ambient temperature will exceed 120 degrees F.

END OF SECTION

INTENTIONALLY LEFT BLANK

SECTION 05 05 23
WELDING

PART 1 GENERAL

1.01 REFERENCES

A. The following is a list of standards that may be referenced in this section:

1. American Society of Mechanical Engineers (ASME):
   a. BPVC SEC V, Nondestructive Examination.
   b. BPVC SEC IX, Welding and Brazing Qualifications.
2. American Society of Nondestructive Testing (ASNT): SNT-TC-1A, Personnel Qualification and Certification in Nondestructive Testing.
3. ASTM International (ASTM): A370, Standard Test Methods and Definitions for Mechanical Testing of Steel Products.
4. American Welding Society (AWS):
   a. A2.4, Standard Symbols for Welding, Brazing, and Nondestructive Examination.
   b. A3.0, Standard Welding Terms and Definitions.
   c. D1.1/D1.1M, Structural Welding Code—Steel.
   d. D1.8/D1.8M, Structural Welding Code—Seismic Supplement.
   e. D1.2/D1.2M, Structural Welding Code—Aluminum.
   f. D1.3/1.3M, Structural Welding Code—Sheet Steel.
   g. D1.4/D1.4M, Structural Welding Code—Reinforcing Steel.
   h. D1.6/D1.6M, Structural Welding Code—Stainless Steel.
   i. QC1, Standard for AWS Certification of Welding Inspectors.

1.02 DEFINITIONS

A. CJP: Complete Joint Penetration.

B. CWI: Certified Welding Inspector.

1. Contractor’s Welding Inspector: Contractor’s CWI acts for, and on behalf of, the Contractor for all inspection and quality matters within the scope of the Contract Documents. Contractor is required to provide a welding inspector to oversee welding operations and be responsible for visual inspection and necessary correction of all deficiencies in materials and workmanship required to meet referenced welding codes. This type of Quality Control Inspection is not classified as Special Inspection.
2. Verification Inspector: This independent inspection is the prerogative of the Owner, who may employ their own, independent CWI, or waive this supplementary, independent CWI inspection.

C. MT: Magnetic Particle Testing.

D. NDE: Nondestructive Examination.

E. NDT: Nondestructive Testing.

F. PJP: Partial Joint Penetration.

G. PQR: Procedure Qualification Record.

H. PT: Liquid Penetrant Testing.

I. Special Inspection: Nondestructive examination including MT, PT, UT, and RT. Special Inspection personnel report to, and are retained by the Contractor. See additional requirements in Section 01 45 33, Special Inspection, Observation, and Testing.

J. RT: Radiographic Testing.

K. UT: Ultrasonic Testing.

L. VT: Visual Inspection/Testing.

M. WPQ: Welder/Welding Operator Performance Qualification Record.

N. WPS: Welding Procedure Specification.

1.03 SUBMITTALS

A. Action Submittals:

1. Shop Drawings:
   a. Shop and field WPSs and PQRs.
   b. NDT procedure specifications prepared in accordance with ASME BPVC SEC V.
   c. Welding Data (Shop and Field): Submit welding data together with Shop Drawings as a complete package.
      1) Show on Shop Drawings, or on a weld map, complete information regarding base metal ASTM specifications, and location, type, size, and length of all welds.
      2) Identify WPS to be used, and NDE requirements in tail of welding symbols as indicated in AWS A2.4.
      3) Clearly distinguish between shop and field welds.
      4) Indicate, by welding symbols or sketches, details of welded joints and preparation of base metal. Provide complete joint welding details showing bevels, groove angles, and root openings for welds.
      5) Welding and NDE Symbols shall be in accordance with AWS A2.4. Welding terms and definitions shall comply with AWS A3.0.

B. Informational Submittals:

1. WPQs.
2. CWI credentials.
3. Testing agency personnel credentials.
4. CWI visual inspection (VT) reports.
5. Welding Documentation: Submit on forms provided in referenced welding codes.

1.04 QUALIFICATIONS

A. WPSs: In accordance with AWS D1.1/D1.1M (Annex J Forms) for shop or field welding; or ASME BPVC SEC IX (Forms QW-482 and QW-483) for shop welding only.

B. WPQs: In accordance with AWS D1.1/D1.1M (Annex J Forms); or ASME BPVC SEC IX (Form QW-484).

C. CWI: Certified in accordance with AWS QC1, and having prior experience with specified welding codes. Alternate welding inspector qualifications require prior approval by Engineer.

D. Testing Agency: Personnel performing tests shall be NDT Level II certified in accordance with ASNT SNT-TC-1A.

1.05 SEQUENCING AND SCHEDULING

A. Unless otherwise specified, Submittals required in this section shall be submitted and approved prior to commencement of welding operations.

PART 2 PRODUCTS

2.01 SOURCE QUALITY CONTROL

A. Contractor's or Fabricator's CWI shall be present whenever shop welding is performed. CWI shall perform inspection at suitable intervals, prior to assembly, during assembly, during welding, and after welding. CWI shall perform inspections as required in AWS D1.1/D1.1M or referenced welding code and as follows:

1. Verify conformance of specified job materials and proper storage.
2. Monitor conformance with approved WPSs.
3. Monitor conformance of WPQs.
4. Inspect weld joint fit-up and perform in-process inspections.
5. Provide 100 percent visual inspection of completed welds.
6. Coordinate with nondestructive testing personnel and review NDE results.

7. Maintain records and prepare reports documenting that results of CWI VT and required NDE complies with the Work and referenced welding codes.

PART 3 EXECUTION

3.01 GENERAL

A. Welding and Fabrication by Welding: Conform to governing welding codes referenced in attached Welding and Nondestructive Testing Table.

B. Qualify welding procedure specifications for pressure piping for notch toughness by limiting heat input. Conduct Charpy testing of weld metal and heat-affected zone as part of the welding procedure qualification in accordance with ASTM A370, at a test temperature of 30 degrees F. The minimum average energy of the test coupons shall not be less than 25 foot-pounds.

3.02 NONDESTRUCTIVE WELD TESTING REQUIREMENTS

A. Quality Control Inspection:

1. All Welds: 100 percent VT by Contractor's CWI.
2. Acceptance Criteria:
   a. Structural Pipe and Tubing: AWS D1.1/D1.1M, Paragraph 10.24.
   b. All Other Structural Steel: AWS D1.1/D1.1M, Paragraph 8.9, Visual Inspection, Statically Loaded Nontubular Connections.
   c. Stud Connections: AWS D1.1/D1.1M, Paragraph 9.8.1.

B. Nondestructive Testing Requirements:

1. NDT frequency shall be as specified below, as required by referenced welding codes, or as specified in the attached table. In case there is a conflict, the higher frequency level of NDT shall apply.
   a. Nontubular Connections:
      1) CJP Butt Joint Groove Welds: 10 percent random RT. Use UT for CJP butt joint groove welds that cannot be readily radiographed.
      2) All Other CJP Groove Welds: 10 percent random UT.
      3) Fillet Welds and PJP Groove Welds: 10 percent random PT or MT.

   b. Tubular Connections:
      1) CJP butt joint groove welds made from one side without backing: 100 percent RT or UT in accordance with AWS D1.1/D1.1M, Paragraph 10.25.2 requirements..
      2) CJP Butt Joint Groove Welds made with back-gouging: 10 percent random RT.

3) CJP Butt Joint Groove Welds made with backing and other butt joint groove welds that cannot be readily radiographed: 10 percent random UT.
4) All Other CJP Groove Welds: 10 percent random UT.
5) Fillet Welds and PJP Groove Welds: 10 percent random PT or MT.

2. NDT Procedures and Acceptance Criteria:
   a. Nontubular Connections:
      1) RT: Perform in accordance with AWS D1.1/D1.1M, Clause 8, Part E. Acceptance criteria per AWS D1.1/D1.1M, Paragraph 8.12.1.
      2) UT: Perform in accordance with AWS D1.1/D1.1M, Clause 8, Part F. Acceptance criteria per AWS D1.1/D1.1M, Paragraph 8.13.1.
      3) PT and MT:
         a) Perform on fillet and PJP groove welds in accordance with AWS D1.1/D1.1M, Paragraph 8.14.4 and Paragraph 8.14.5.
         b) Acceptance criteria per AWS D1.1/D1.1M, Paragraph 8.9, Visual Inspection, Statically Loaded Nontubular Connections.
   b. Tubular Connections:
      1) RT: Comply with requirements for Nontubular Connections and additional requirements of AWS D1.1/D1.1M, Clause 10, Paragraph 10.27 and Paragraph 10.28.
      2) UT: Comply with requirements for Nontubular Connections and additional requirements of AWS D1.1/D1.1M, Clause 10, Paragraph 10.26, and Paragraph 10.29.
      3) PT and MT:
         a) Perform on fillet and PJP groove welds in accordance with AWS D1.1/D1.1M, Paragraph 8.14.4 and Paragraph 8.14.5.
         b) Acceptance criteria per AWS D1.1/D1.1M, Paragraph 10.24.

3.03 FIELD QUALITY CONTROL

A. The Contractor's CWI shall be present whenever field welding is being done and shall perform inspection, at suitable intervals, prior to assembly, during assembly, during welding, and after welding. CWI shall perform inspections as required in AWS D1.1/D1.1M or referenced welding code and as follows:

1. Verify conformance of specified job materials and proper storage.
2. Monitor conformance with approved WPS.
3. Monitor conformance of WPQ.
4. Inspect weld joint fit-up and perform in-process inspection.

5. Provide 100 percent visual inspection of all welds in accordance with Paragraph Quality Control Inspection.
6. Coordinate with nondestructive testing personnel and review test results.
7. Maintain records and prepare reports confirming results of inspection and testing comply with the Work.

3.04 WELD DEFECT REPAIR

A. Repair and retest rejectable weld defects until sound weld metal have been deposited in accordance with appropriate welding codes.

3.05 SUPPLEMENT

A. The supplement listed below, following "End of Section," is a part of this Specification.

1. Welding and Nondestructive Testing Table.

END OF SECTION

Welding and Nondestructive Testing						
Specification Section	**Governing Welding Codes or Standards**	**Submit WPS**	**Submit WPQ**	**Onsite CWI Required?**	**Submit Written NDT Procedure Specifications**	**NDT Requirements**
05 12 00 Structural Steel Framing	AWS D1.1/D1.1M, Structural Welding Code—Steel	Yes	Yes	Yes	Yes	100% VT and 10% UT or RT of all groove-and-butt joint welds; 10% MT of all fillet welds; also see Section 05 12 00
05 53 00 Metal Gratings	AWS D1.1/D1.1M, Structural Welding Code—Steel or AWS D1.2/D1.2M, Structural Welding Code—Aluminum	No	No	No	No	100% VT; also see Section 05 53 00
48 58 68 Welding of Power Plant Piping	ASME BPV Code Sections I, II, V, and IX; ASME B16.25; ASME B31.1; AWS QC 1; ASNT SNT-TC-1A	Yes	Yes	Yes	Yes	100% VT; Additional NDT as required by the referenced codes and standards

SECTION 05 10 00
ERECTION OF STRUCTURAL AND MISCELLANEOUS STEEL

PART 1 GENERAL

1.01 SCOPE

A. This Specification governs the erection of structural and miscellaneous steel. Erection includes furnishing labor, materials and equipment necessary to receive, unload, store, remove from storage, and erect steel and metal decking and to perform inspection and testing for structural steel erection.

B. Structural and miscellaneous steel shall be fabricated and delivered by the Contractor to the Project Site.

C. Metal decking shall be fabricated and delivered by the Contractor to the Project Site.

D. Structural and miscellaneous steel, grating, metal decking, and associated materials shall be received, unloaded, stored, protected, removed from storage, transported to the point of erection and erected. Such items consist of, but are not limited to, the following:

1. Columns, beams, girders, trusses, girts, purlins, bracing, column base and bearing plates, steel framing, and accessory steel.
2. All steel stairs, including stringers, treads, nosings, landings, bracing, and struts.
3. Handrails and kick plates.
4. Metal ladders, safety cages, and gates.
5. Metal and/or fiberglass grating.
6. Equipment supports and hangers.
7. Pipe and cable tray support beams.
8. High strength and common bolted connections, including field bolts and shims.

E. Contractor shall furnish the following:

1. Any high strength or common bolt fasteners (including washers, nuts, bolts, Direct Tension Indicators) that are required to complete the erection shall be furnished by the Contractor, at his expense, and shall conform to the requirements of this Specification.
2. Welding electrodes and supplies as required to complete field erection.
3. Weldable studs to complete assembly of members.
4. Paint for repairing damaged/abraded ferrous surfaces.
5. Material required to grout all base plates.
6. Rigging tools, slings, shackles, etc., as required, to erect structural and miscellaneous steel.

7. A properly calibrated Skidmore-Wilhelm Direct Tension Measuring Device for use in calibration of impact wrenches, testing of bolt assemblies, and verification of Direct Tension Indicators. The device shall remain on the Project throughout the duration of the Work.

1.02 REFERENCES

A. The following is a list of standards which may be referenced in this section:

1. American Institute of Steel Construction (AISC):
   a. Manual of Steel Construction, Fourteenth Edition.
   b. AISC 360, Specification for Structural Steel Buildings.
   c. AISC 303, Code of Standard Practice for Steel Buildings and Bridges.
2. Research Council on Structural Connections (RCSC): Specification for Structural Joints Using High-Strength Bolts.
3. American Society for Testing and Materials (ASTM):
   a. A108, Standard Specification for Steel Bar, Carbon and Alloy, Cold-Finished.
   b. A304, Standard Specification for Carbon and Alloy Steel Bars Subject to End-Quench Hardenability Requirements.
   c. A307, Standard Specification for Carbon Steel Bolts, Studs, and Threaded Rod 60 000 PSI Tensile Strength.
   d. A325, Standard Specification for Structural Bolts, Steel, Heat Treated, 120/105 ksi Minimum Tensile Strength.
   e. A780, Standard Practice for Repair of Damaged and Uncoated Areas of Hot-Dip Galvanized Coatings.
4. American Welding Society (AWS): D1.1, Structural Welding Code.
5. Steel Structures Painting Council (SSPC):
   a. PA1, Shop, Field and Maintenance Coating of Metals.
   b. SP3, Power Tool Cleaning.
6. Occupational Safety and Health Administration (OSHA):
   a. Title 29, Part 1910, Occupational Safety and Health Standards.
   b. Title 29, Part 1926, Construction Safety and Health Regulations.
7. Related Sections:
   a. Section 03 60 00, Structural and Equipment Grouting.
   b. Section 05 12 00, Supply and Fabrication of Structural and Miscellaneous Steel.
   c. Section 09 90 01, Painting and Protective Coatings.

B. Should a conflict be found between the listed codes and standard and this Specification and/or Project Drawings, the conflict shall be submitted to the Engineer for resolution prior to proceeding with the affected Work.

1.03 SUBMITTALS

A. In addition to the inspection reports and welder's qualification reports to be submitted to the Engineer by the Contractor, two copies of the following

documentation shall also be submitted to the Engineer as soon as possible and prior to erection or use of materials delivered by the Contractor.

1. Certification and Material Test Reports, submitted with each delivery.
2. Verification test reports for direct tension indicators.
3. An OSHA Qualified Site-Specific Erection Plan, in accordance with Title 29, Parts 1910 and 1926.
4. Structural steel erector's AISC Certification (not required for steel walkway erection).

B. Prior to final inspections and acceptance by the Owner or his representative, the Contractor shall submit to the Engineer four copies of a certificate of conformance to this Specification.

PART 2 PRODUCTS

2.01 MATERIALS

A. The Contractor supplied materials shall conform to the following:

1. Welding electrodes for carbon steel materials shall have a 70,000 psi minimum tensile strength and comply with Table 3.1, AWS D1.1.
2. Grout shall conform to the requirements of Section 03 60 00, Structural and Equipment Grouting.

B. Should the Contractor be required to furnish various materials, they shall conform to the latest editions of the specified codes, standards and regulations, as indicated, and as specified herein.

C. All structural steel materials, if supplied by the Contractor as required to complete the Work, or to replace lost or damaged materials, shall conform to Section 05 12 00, Supply and Fabrication of Structural and Miscellaneous Steel.

D. Touchup paint to repair damaged paint during steel erection work shall be as follows:

1. Paint for touchup of prime paint shall be compatible with the shop applied primer.
2. Paint for touchup of galvanized steel shall be "ZRC Cold Galvanizing Compound" as manufactured by ZRC Worldwide, or an Engineer-approved substitute.

2.02 RECEIVING AND STORAGE

A. The Contractor shall furnish labor, equipment, and materials to unload and place in storage the deliveries of structural steel and miscellaneous steel and metal decking.

1. A visual inspection of delivered materials shall be performed by the Contractor prior to unloading. Any damage shall be brought to the attention of, and acknowledged by the delivery agent prior to unloading, and the Engineer shall be advised of the damage in writing.
2. Bills of Lading shall be checked as materials are unloaded. Shortages shall be acknowledged by the delivery agent's initials on the Bill of Lading and the Engineer advised in writing.
3. The materials shall be handled and stored in a manner that shall preclude physical damage, reduce coating damage, water-holding pockets, and surface contamination.
4. The inventory control shall include, in addition to the materials, the storage location of the material.
5. Unloading operations shall be performed with minimum delay. Any cost of demurrage resulting from the Contractor's neglect to unload materials promptly shall be at the expense of the Contractor.

2.03 STRUCTURAL STEEL ERECTION—GENERAL

A. The structural steel erector shall be AISC Certified (not required for steel walkway erection).

B. The Contractor shall furnish labor, equipment and materials, including erection bolts, welding electrodes, drift pins, etc., for removal from storage and erecting of structural and miscellaneous steel. Erection shall comply with the following and the requirements of the applicable publications, unless otherwise specified or noted on the Drawings:

1. Erection shall be in accordance with "Approved for Construction" Drawings, "Certified for Construction" shop and erection Drawings, and the AISC "Steel Construction Manual," including the "Specification for Structural Steel Buildings" and the "Code of Standard Practice," unless otherwise specified or noted on the approved Drawings.
2. Splicing of compression members shall be done after the abutting surfaces have been brought into contact. Bearing surfaces shall be cleaned with burrs removed prior to assembly.
3. No connections or splices shall be made in the field except where shown on the approved Drawings or as otherwise approved by the Engineer.
4. Base and bearing plates shall be supported and aligned on steel wedges and shims. Leveling nuts shall not be used to set base and bearing plate elevations. After the supported members have been properly positioned and the anchor nuts tightened, the entire area under the plate shall be grouted in accordance with "Specification for Structural and Equipment Grouting," Section 03 60 00, Structural and Equipment Grouting. Wedges and shims shall be cut-off flush with edges of the column base or bearing plates where required to achieve a neat appearance.
5. The Contractor shall furnish and install all temporary bracing and/or guying required to enable the members and structure to resist seismic,

wind, dead load, or other loads imposed on the incomplete structure, including such bracing as may be shown on the design or erection Drawings.

6. No bolting, other than temporary or for fit-up, or welding shall be performed until as much of the structure as will be stiffened thereby has been properly aligned and plumbed to comply with the tolerances of AISC 303.
7. The Work shall be securely bolted or welded to support all dead, live, wind, or erection loads prior to removal of temporary bracing or guys.

PART 3 EXECUTION

3.01 BOLTED CONNECTIONS

A. Unless welded connections are shown on approved Drawings or otherwise approved by the Engineer, all field connections shall be bolted.

B. Field connections for secondary members, such as stairs, ladders, handrails and girts, shall be bearing-type connections made with “common or regular bolts” conforming to ASTM A307. “Common or regular bolts” shall be tightened to a “snug-tight” condition. “Snug-tight” shall be defined as the full effort of a man using an ordinary “spud” wrench.

C. Field connections for primary connections shall be bearing type connections. All field bolted connections shall use hot-dip galvanized hardware. The type of connection used at a particular joint shall be determined by the size of high strength bolt indicated on the erection drawings as follows:

1. ¾-Inch Diameter: Bearing connections.
2. All high-strength bolts shall have one plain hardened washer under the turned element (nut or bolt head). A hardened beveled washer shall be used where the outer face of the bolted parts has a slope greater than 1:20.
    a. Bearing Connections: High strength bolts shall be installed in a standard 13/16-inch diameter hole, or short-slotted hole oriented perpendicular to the direction of the reaction force.
    b. Bearing connections shall be installed to a fully tensioned condition.
    c. Bearing connections shall be installed as follows:
        1) Direct tension indicators shall be used under the non-turning part of the connection.
        2) Hardened washer shall be used under the turned part of the connection.
        3) Prior to tightening bolts, all plies of the connection shall be drawn into firm contact. Tightening of bolts shall progress from the most rigid part of the connection to its free edges.
        4) Provided that the above procedure has been followed, the control of tightening of high-strength bolts shall be as

follows: The clamping force shall have caused the protrusions of the direct tension indicators to partially flatten and thus reduce the gap between the direct tension indicators and the surface of the bolt-nut assembly to the prescribed measurement as established by the manufacturer.

d. The installation of all high-strength bolts shall be supervised and inspected by an inspector retained by the Contractor. Inspection shall be as specified in paragraph 3.09, Testing and Inspection. In the event bolting operations or in-place bolts do not meet specifications, corrections shall be made by the Contractor as directed by the Engineer.

1) Drift pins may be used to bring parts into alignment but shall not be used in a manner which will distort or damage the structural steel. Gas cutting shall not be used to enlarge holes. Suitable reaming devices shall be used if minor enlargement of holes is necessary.

3.02 WELDED CONNECTIONS

A. Field welding shall not be permitted unless shown on the approved Drawings or directed in writing by the Engineer.

B. Where welding or tacking is required, it shall be performed by welders or tackers who are qualified in accordance with the requirements of AWS "Structural Welding Code" D1.1 and have passed such qualification tests within the 6 months prior to start of erection work.

C. Prior to use of any welder or tacker on the Work, the Contractor shall submit legible reproductions of the qualification test report(s) for each welder or tacker for each class of work to be done in accordance with the governing code(s). Two copies of each welder qualification report shall be delivered to the Engineer.

D. Welding shall be performed in accordance with the approved Drawings, the AWS "Structural Welding Code" D1.1 and the requirements set forth in the AISC 360.

3.03 MISCELLANEOUS STEEL ERECTION

A. Holes for pipes passing through the grating, which are not provided in the shop, shall be cut and banded in the field in accordance with field measurements of the pipes in place. Field cut openings 10 inches in diameter or 12 inches in diagonal or larger shall be banded with 5-1/4 by 1/4-inch plate with 4-inch projection above the top of grating. Smaller openings shall be banded with 2-1/4 by 3/16-inch bar with 1 inch projection above the top of grating. All field cut grating shall be cleaned and have any damaged galvanizing repaired by using "ZRC Cold Galvanizing Compound", including banding.

B. Holes for pipes shall clear the pipe, or pipe insulation, by not less than 1 inch or more than 1-1/2 inches, except that the arrangement shall allow for the displacement of pipes due to their expansion or contraction without contact between the grating and pipe or pipe insulation.

C. Grating panels shall be anchored to supporting members with galvanized saddle clips as shown on the approved Drawings. Anchors shall consist of 1/4-inch stainless steel self-drilling screws, furnished by the Contractor or other proprietary anchorage devices as approved by the Engineer.

D. Grating panels shall be attached with a minimum of four clips. Extra clips shall be installed as required to provide a smooth walking surface without vertical offsets exceeding 1/8-inch at adjacent panels.

E. Removable floor plate shall be attached to supporting steel with 1/2-inch diameter countersunk flat head bronze tap bolts spaced not more than 2 feet 6 inches on centers, with a minimum of four bolts per panel, unless otherwise shown on approved Drawings. All other floor plate shall be plug welded to supporting steel with 1/2-inch diameter plug welds at 2 feet spacing with a minimum of four welds per panel. All plug-welded floor plates shall be cleaned and have any damaged galvanizing repaired by using “ZRC Cold Galvanizing Compound”.

F. Adjacent floor plate panels or floor plate panels adjust to other types of walking surfaces shall be installed in such a manner as to ensure that no more than 1/8-inch difference in height shall exist between the adjoining surfaces. This may be accomplished by straightening the floor plate panels and/or by adding additional bolts (in the case of removable floor plate) or welds.

G. Handrail and posts shall be installed in accordance with approved Drawings.

3.04 FIELD TOUCHUP PAINTING

A. The Contractor shall perform field touchup painting for the erected steel as follows:

1. Scarred or abraded shop primed surfaces.
2. Areas left unprimed for field welding operations.
3. Shop-applied primer damaged by field welding.
4. Field installed bolted connections. Painting of bolted connections made in the field shall not commence until after the bolts have been tightened, inspected, and approved by the Engineer.
5. Galvanized surfaces that have been abraded, field cut, or damaged by field welding.

B. Ferrous surfaces specified above shall be prepared in accordance with SSPC-SP3.

C. The Contractor shall ensure that the touchup primer is the same general type, and compatible with, the shop primer.

D. Application and curing of paint shall be in strict accordance with the manufacturer's instructions and SSPC-PA1. A minimum of one coat of primer shall be applied to the prepared surfaces.

E. Prepared areas of galvanized materials shall be coated with a minimum of two coats of "ZRC Cold Galvanizing Compound" as manufactured by ZRC Worldwide. Apply in accordance with the manufacturer's recommendations. Also follow ASTM A780 for repair of damaged areas.

3.05 ERRORS

A. Errors in detailing and/or fabrication or deformation caused by improper handling, which prevent proper assembly, shall be reported immediately to the Engineer. All field corrections or modifications to main members such as rigid frames, bracing, beams, girders, and columns shall be submitted to the Engineer for approval. Corrections or modifications to secondary members shall be coordinated with the Engineer prior to being made by the Contractor.

1. Use of gas cutting for correction of errors shall be permitted only when approved by the Engineer.

B. Work that is not in conformance to this Specification or damage to materials resulting from actions of the Contractor in the performance of the Work shall be corrected, at the expense of the Contractor as directed by the Engineer. The Contractor shall notify the Engineer in writing of such damage or nonconformance.

3.06 CLEANUP

A. Upon completion of erection and prior to the Engineer's final acceptance of the Work or any portion of the Work, the Contractor shall remove all falsework, debris, rubbish, and unused materials furnished by the Contractor from his work areas and the Project or from the work area if acceptance is for a portion of the Work.

1. Disposal of the above shall be at the Contractor's expense.

B. The Contractor shall leave his work areas neat and clean and subject to approval of the Engineer so that subsequent construction can proceed.

C. The Contractor shall, in addition to the above, dispose of unused material furnished by the Engineer as directed by the Engineer. Such material is not to be removed from the Project Site unless directed by the Engineer.

3.07 TESTING AND INSPECTION

A. Throughout all periods of erection, the Owner and/or Engineer or their representatives may inspect portions or components of the erected structures. The Contractor shall provide access for inspectors and shall provide cooperation and assistance as may be requested.

B. Testing of Direct Tension Indicators:

1. The Contractor shall be responsible for field testing each lot of Direct Tension Indicators (Load Indicator Washers) that will be used in the installation of high strength bolts for field connections of the structural steel.
    a. The Contractor shall test three washers from each lot for each bolt diameter in a Skidmore-Wilhelm device to ascertain that the load indicator washer, when installed in the same manner as they will be installed in the structure, shall result in a bolt tension 5 percent greater than the required proof load of the bolt when the gap has been closed to the measurement specified by the manufacturer of the load indicating washer.
    b. Impact wrenches shall be set to tighten the bolt and flatten the protrusions on the load indicator washer to the specified measurement in 10 seconds or less after the wrench begins to impact.

C. Inspection of High Strength Bolts and Nuts:

1. The Contractor shall inspect each shipment of high strength bolt, nut, and washer assemblies.
    a. The Contractor shall ascertain that all certification and test documentation, as required by the Project Specifications, has accompanied the shipment and that the documents are applicable and traceable to the particular shipment.
    b. The Contractor shall ascertain that all high strength bolts have been shipped, properly packaged, assembled as a unit with nut, washer, and DTI and that the bolts and nuts are lubricated in accordance with the Specification requirements.
    c. The Contractor shall be prepared to perform “turn of nut” tests on bolt assemblies, as required by ASTM A325, if required for field verification.

D. Inspection of Bolted Steel Connections:

1. The Contractor shall inspect the Work to insure that proper "bolt up" procedures are followed at all times. Installation and tightening procedures shall comply with the requirements of the RCSC Specification and the AISC.
    a. All plies of each connection are to be brought into snug contact prior to final tightening of the bolts.
    b. Tightening of the bolts shall begin at the most rigid part of the connection and work outward until all bolts are tightened. On large connections, the bolts shall only be tightened to approximately 50 percent of the final tension and the tightening cycle shall be repeated to obtain the final tension load in the bolt.
    c. The load indicator washers are to be installed in strict conformance to the manufacturer's recommendations.
    d. The Contractor shall visually inspect 100 percent of the high-strength bolts in each connection to ensure that the protrusions on the load indicator washers have been flattened to the proper extent.

E. Testing of Bolted Steel Connections:

1. The Contractor shall measure the average gap of the installed load indicator washer in at least 10 percent of the bolts, but not less than two bolts, in each connection. When the bolt is properly tightened, the resulting average gap shall be the gap specified by the manufacturer of the load indicator washers or less.
    a. The feeler gauge shall be used as a "go" or "no-go" tool. If the gauge does not enter the gap, the installation shall be considered satisfactory.

F. Inspection of Field Welds:

1. All field welding shall be 100 percent visually inspected by the Contractor and documented on inspection reports. The standard for visual acceptance shall be in accordance with AWS D1.1. If, based on this standard, the weld is rejected; the entire weld shall be ground out for a distance equal to the length of the crack plus 2 inches at each end of the crack, and then rewelded, following accepted welding procedures, at the Contractor's expense. Such rewelding is subject to reinspection.

2. The cost of visual weld inspection and non-destructive testing is to be a part of the Contractor's expense. If AWS Certified Welding Inspectors (CWI) are not a part of the Contractor's Quality Control Program, an independent testing lab, employing AWS QC1 certified (CWI) inspectors, shall be retained by Contractor at the Contractor's expense. The Contractor's inspectors shall not be involved in production work while acting as an inspector.
3. All full penetration welds shall be 100 percent ultrasonically tested per tension weld criteria of AWS D1.1, Section 6, Part C, using an ANT-TC-1A Level II certified nondestructive testing technician. Where shown on the Drawings, fillet and partial penetration welds shall be magnetic particle inspected. Also, a minimum of 10 percent of the remaining welds shall be selected for testing at the discretion of the Engineer. Where magnetic particle testing is impossible due to construction configuration or inaccessibility, dye penetrant inspection may be used with prior written approval of the Engineer. Inspection shall be performed in accordance with AWS D1.1.
4. Reports of weld testing results for the non-destructive examination program shall be submitted to the Engineer for review after testing is completed.

END OF SECTION

INTENTIONALLY LEFT BLANK

SECTION 05 12 00
SUPPLY AND FABRICATION OF
STRUCTURAL AND MISCELLANEOUS STEEL

PART 1 GENERAL

1.01 SCOPE

A. This Specification governs the detailing, fabrication and delivery of structural and miscellaneous steel and metal floor decking.

B. Items to be Furnished: Items to be furnished shall consist of, but not necessarily be limited to, the following:

1. Structural steel as defined in the AISC Code of Standard Practice.
2. Base plates, columns, beams, trusses, bracing, girders, plate girders, girts, purlins, sag-rods, hangers, struts and miscellaneous tees and angles, including all essential clips, gussets and separators.
3. Preassembled steel stairs, including stringers and treads, nosings, landings, bracing and struts.
4. Handrails, Guardrails, and kick plates.
5. Metal ladders and ladder safety cages.
6. Metal grating (galvanized).
7. Raised pattern floor plate (galvanized).
8. Bolts with washers and nuts (common and high strength), both for shop bolting and bolting for field erection. An extra 2 percent of each field bolt size (diameter and length) plain hardened and load indicating washers and nuts shall be furnished to allow for waste in field erection.
9. Metal frames, which form a part of the structural steel framing, for penetrations and other openings shown on design drawings.
10. Shims required for connections.
11. Beam bearing plates.
12. Shop and erection drawings and other engineering design and data as specified.
13. Fabrication and delivery to the jobsite of the specified items.

1.02 QUALITY ASSURANCE

A. Qualifications:

1. AISC Certification for Fabricator (not required for steel walkway fabrication).
2. AISC Certification for Contractor (not required for steel walkway erection).
3. Galvanized Coating Applicator: Company specializing in hot-dip galvanizing after fabrication and following procedures of AGA's Quality Assurance Manual.

B. Certifications:

1. Mill identification marks, heat number, size of section, and length in accordance with ASTM A6/A6M, where required.
2. AISC Quality Certification for Fabricator: Standard for Steel Building Structures (STD).

C. Field Verification: Contractor shall field verify dimensions of installed structures and enclosures and make minor adjustments to platforms, stairs, ladders and the like prior to developing Shop Drawings in order to ensure correct fitment of fabrications.

1.03 REFERENCES

A. The following is a list of standards which may be referenced in this section:

1. American Galvanizing Association (AGA): Quality Assurance Manual.
2. American Institute of Steel Construction (AISC):
   a. Steel Construction Manual (Fourteenth Edition), including:
      1) Specification for Structural Steel Buildings.
      2) Code of Standard Practice for Steel Buildings and Bridges.
      3) AISC Quality Certification Program.
      4) Structural Steel Detailing Manual.
      5) Seismic Provisions for Structural Steel Buildings.
3. American Society for Testing and Materials (ASTM):
   a. A6/A6M, Standard Specification for General Requirements for Rolled Structural Steel Bars, Plates, Shapes and Sheet Piling.
   b. A36/A36M, Standard Specification for Carbon Structural Steel.
   c. A53/A53M, Standard Specification for Pipe, Steel, Black and Hot-Dipped, Zinc-Coated, Welded and Seamless.
   d. A90/A90M, Standard Test Method for Weight [Mass] of Coating on Iron and Steel Articles with Zinc or Zinc-Alloy Coatings.
   e. A123/A123M, Standard Specification for Zinc (Hot-Dip Galvanized) Coatings, on Iron and Steel Products.
   f. A143/A143M, Standard Practice for Safeguarding Against Embrittlement of Hot Galvanized Structural Steel Products and Procedure for Detecting Embrittlement.
   g. A304, Standard Specification for Carbon and Alloy Steel Bars Subject to End-Quench Hardenability Requirements.
   h. A307, Standard Specification for Carbon Steel Bolts, Studs, and Threaded Rod 60,000 PSI Tensile Strength.
   i. A325, Standard Specification for Structural Bolts, Steel, Heat Treated, 120/105 ksi Minimum Tensile Strength.
   j. A384/A384M, Standard Practice for Safeguarding Against Warpage and Distortion During Hot Dip Galvanizing of Steel Assemblies.
   k. A385/A385M, Standard Practice for Providing High Quality Zinc Coatings (Hot-Dip).

l. A500/A500M, Standard Specification for Cold-Formed Welded and Seamless Carbon Steel Structural Tubing in Rounds and Shapes.
m. A501, Standard Specification for Hot-Formed Welded and Seamless Carbon Steel Structural Tubing.
n. A563, Standard Specification for Carbon and Alloy Steel Nuts.
o. A653, Standard Specification for Steel Sheet, Zinc-Coated (Galvanized) or Zinc-Iron Alloy-Coated (Galvannealed) by the Hot-Dip Process.
p. A673/A673M, Standard Specification for Sampling Procedure for Impact Testing of Structural Steel.
q. A786/786M, Standard Specification for Hot-Rolled Carbon, Low-Alloy, High-Strength Low-Alloy, and Alloy Steel Floor Plates
r. A992/A992M, Standard Specification for Structural Steel Shapes.
s. A1011/A1011M, Standard Specification for Steel, Sheet and Strip, Hot-Rolled, Carbon, Structural, High-Strength Low-Alloy, High-Strength Low-Alloy with Improved Formability, and Ultra-High Strength.
t. B695, Standard Specification for Coatings of Zinc Mechanically Deposited on Iron and Steel.
u. E165, Standard Practice for Liquid Penetrant Examination for General Industry.
v. E709, Standard Guide for Magnetic Particle Testing.
w. F436, Standard Specification for Hardened Steel Washers.
x. F959, Standard Specification for Compressible Washer Type Direct Tension Indicators for Use with Structural Fasteners.
y. F1852, Standard Specification for "Twist Off" Type Tension Control Structural Bolt/Nut/Washer Assemblies, Steel, Heat Treated, 120/105 ksi Minimum Tensile Strength.

4. American Welding Society (AWS):
   a. D1.1, Structural Welding Code.
   b. D1.3, Structural welding Code, Sheet Metal.
5. Crane Manufacturers of America (CMAA):
   a. Specification 70.
   b. Specification 74.
6. National Association of Architectural Metal Manufacturers (NAAMM) Specifications: "Standard Specification for Metal Bar Grating and Metal Bar Grating Treads" as found in the Metal Bar Grating Manual for Steel and Aluminum Gratings and Stair Treads published by NAAMM.
7. Occupational Safety and Health Act (OSHA).
8. Research Council on Structural Connections of the Engineering Foundation (RCSC): Specification for Structural Joints Using High-Strength Bolts.
9. Steel Structures Painting Council (SSPC):
   a. SP8, Pickling.
   b. SP10, Near White Metal Blast Cleaning.
10. International Building Code (IBC), 2012.
11. Related Sections:

a. Section 05 52 19, Steel Railings
b. Section 05 53 00 Metal Gratings
c. Section 09 90 01, Painting and Protective Coatings.

1.04 SUBMITTALS

A. All connection design calculations prepared by the Contractor shall be submitted to the Engineer for review and approval before fabrication can be started.

B. Shop and erection drawings prepared by the Contractor shall be submitted to the Engineer for review in accordance with the following:

1. Review drawings shall be examined by the Engineer for general arrangement, dimensions and suitability and returned to the Contractor. Review by the Engineer of the shop and erection drawings shall not be construed as a complete check, but shall indicate only that the general method of construction and detailing is satisfactory. Review of such Drawings shall not relieve the Contractor of the responsibility for any error which may exist, and the Contractor shall be responsible for any error which may exist, and the Contractor shall be responsible for all dimensions, detail design, and satisfactory fabrication of all Work. Material shall not be fabricated or delivered to the jobsite before the Engineer's review of shop and erection drawings has been completed and indicated revisions, if any, are made.
2. Drawings shall include all shop and erection details, including cuts, copes, connections, holes, bolts, and welds in structural steel. Drawings shall show size, length, and type of each weld.
3. Where material is marked "HOLD" on the Drawings, that material shall not be detailed until the "HOLD" is removed by the Engineer.
4. Prior to preparation of Shop Drawings, the Contractor shall submit to the Engineer for review and approval an erection and detailing sequence plan. The Contractor shall furnish two copies of detailed erection drawings or procedures, including sequence of erection.
5. Before commencing detailing, the Contractor shall submit for review and approval, the piece mark system which he proposes to use. To be approved by the Engineer, the system shall indicate the location of the piece within the structure, either in the piece mark or with appropriate notation on the detail sheet. The piece mark shall also identify the sheet on which the piece is detailed.
6. A material list shall be included on each Shop Drawing. This list shall use the same categories and units used in this Specification for payment purposes. The categories and quantities shall be subject to confirmation by the Engineer.

C. Mill test reports and certificates of conformance to the Specification requirements shall be submitted to the Engineer for review in accordance with the following:

1. Mill test reports for structural steel shapes, plates and bars, structural pipe, structural tubing, crane rail, etc. which have been ordered by the Contractor for use in the Work shall be submitted to the Engineer for review as the material is delivered to the Contractor's shop.
2. Mill test reports for miscellaneous stock structural material which the Contractor intends to use in the Work shall be submitted to the Engineer for review upon Award of the Contract.
3. Complete certification of all shop and field bolts, nuts, washers and load indicator washers which the Contractor furnishes for the Work shall be submitted to the Engineer for review prior to incorporation in the Work or shipment to the jobsite.
   a. Certification of high strength bolts shall be in complete conformance to the requirements of ASTM A490 and shall, as a minimum, include the following:
      1) Manufacturer.
      2) Chemical composition.
      3) Hardness.
      4) Tensile strength/proof load.
   b. Certification for nuts shall be in complete conformance to the requirements of ASTM A563 and shall, as a minimum, include the following:
      1) Manufacturer.
      2) Chemical composition.
      3) Hardness.
      4) Tensile strength/proof load.
   c. Certification for washers shall be in complete conformance to the requirements of ASTM F436 and shall, as a minimum, include the following:
      1) Manufacturer.
      2) Chemical composition.
      3) Hardness.
   d. Certification for common bolts, nuts, and washers shall be in complete conformance to the requirements of ASTM A307 and shall, as a minimum, include the following:
      1) Manufacturer.
      2) Grade and chemical composition.
      3) Hardness.
      4) Tensile strength.
      5) ASTM designation and grade of nut.
      6) ASTM designation and grade of washer.

4. Charpy V-Notch test reports shall be submitted to the Engineer for review and approval, in accordance with ASTM A673/A673M, as the material is delivered to the Contractor's shop.

PART 2 PRODUCTS

2.01 MATERIALS

A. All structural steel wide flange shapes shall conform to ASTM A992. All s-shapes, channels, angles, plates and bars shall conform to ASTM A36, unless noted otherwise on the design drawings. All pipe piles and casings shall be ASTM A572, GR50, unless noted otherwise on the design drawings. Materials shall be coated as noted on the design drawings and Section 09 90 01, Painting and Protective Coatings.

B. Steel pipe and handrail/guardrail shall conform to ASTM A53, Type S; Grade B. Handrail/guardrail shall be 1-1/2-inch nominal inside diameter.

C. Structural steel tubing shall conform to ASTM A500 Grade B or ASTM A501, Grade B.

D. High strength bolts shall be nut and washer assemblies conforming to ASTM A325 Type 1 with ASTM A563, Grade DH nuts. Washers shall be plain hardened washers conforming to ASTM F436, Type 1 and load indicating washers shall be as manufactured by J&M Turner and shall conform to ASTM F959. Bolts, nuts, and washers shall be hot dip galvanized according to ASTM A153. Hot dip galvanized nuts and bolts shall conform to the nut rotation test requirements of ASTM A325. (Tension control bolt assemblies shall be heavy hex head, twist off type; complete with washers and heavy hex nuts and shall conform to ASTM F1852, Type 1).

E. Common bolts and nuts shall conform to ASTM A307, Grade A. Minimum size of common bolts shall be 3/4-inch diameter, except for those bolts used to secure stair treads to stringers. These bolts shall be 3/8-inch diameter. Bolts, nuts, and washers shall be hot dip galvanized according to ASTM F2329.

F. Weldable studs, 7/8inch diameter and smaller, shall be by Nelson Stud Welding Company, "or-equal", Engineer-approved.

G. Welding electrodes shall be Series E70XX conforming to the American Welding Society Specifications as appropriate for the welding process. Electrodes for manual welding shall have low hydrogen covering.

H. Metal grating shall be ASTM A1011 welded carbon steel with, unless otherwise noted on the design drawings, 11/4 inches deep by 3/16 inches wide bearing bars spaced at 13/16 inches center to center and cross bars at 4 inches

center to center. The grating shall be serrated for outdoor use or as shown on the Drawings. All grating shall be hot dip galvanized.

I. Stair treads shall be ASTM A1011 welded carbon steel bar grating with, unless noted on the design drawings, 3/16-inch wide bearing bars spaced at 13/16 inches center to center, cross bars at 4 inches center to center and a raised pattern, checkered plate nosing of nonslip finish. The stair treads shall be serrated for outdoor use or as shown on the Drawings. The depth of bearing bars shall be 11/4 inches for 30inch and 36inch long treads. Carrier plates shall be in accordance with the recommendations of the National Association of Architectural Metal Manufacturers. All stair treads shall be hotd ip galvanized.

J. Metal deck shall conform to the requirements of the Steel Deck Institute and shall be galvanized in accordance with ASTM A653, Coating Designation G90. Miscellaneous closure pieces, rib fillers and other items shown or necessary to complete the installation of the floor deck, shall be shown on the Drawings or as required for a complete installation.

K. Crane rails, joint bars, track bolts, and joint bar bolts shall conform to the AISC Steel Construction Manual, unless noted otherwise.

L. Lubrite bearings, if required, shall be as manufactured by Lubrite Division of Merriman Bros., Inc., Boston, MA, “or Engineer-approved equal.

M. Miscellaneous items not specifically described, but required for completion of the Work shall, as nearly as practicable, be of standard types.

N. All hot-rolled shapes with flanges 1-1/2 inches thick and thicker shall have a minimum Charpy V-Notch toughness of 20 ft-lb (27J) at 70 degrees F, as tested in the alternate core location as described in ASTM A6 Supplementary Requirement S30, unless otherwise noted on the design drawings. Selected plates 2-inch thick and thicker shall have a minimum Charpy V-Notch toughness of 20 ft-lb (27J) at 70 degrees F, measured at any location permitted by ASTM A673/A673M. Such plates shall be identified on the Drawings. Each plate so identified shall be tested.

O. Materials not conforming to the required Specification or required to be fabricated to tolerance more stringent than those set in ASTM A6 shall be repaired or modified as specified in Fabrication, herein.

P. Material imperfections discovered after delivery of materials or during fabrication may, at the Contractor’s option, be repaired by him as prescribed in ASTM A6.

Q. Materials which do not meet the tolerances set forth in ASTM A6 may, at the Contractor’s option, be adjusted as specified in ASTM A6 using mechanical means and/or the application of heat.

2.02 DESIGN AND DETAILING

A. Drawings furnished herewith are descriptive of requirements for the structural and miscellaneous steel to be furnished hereunder, but do not attempt to describe all design details. Such design and all detailing shall be provided by the Contractor, subject to the Engineer's review and to the following conditions:

1. Design performed by the Contractor shall be accomplished by or under the direction of a qualified Professional Engineer. Contractor shall furnish to the Engineer any and all design calculations executed by the Contractor. Calculations shall be checked and bear the stamp of a Professional Engineer registered in the State of Louisiana.
2. Work shall comply with the "Specification for the Design, Fabrication and Erection of Structural Steel for Buildings," "Code of Standard Practice," "Structural Steel Detailing Manual," and the "Steel Construction Manual" of AISC, the locally adopted building code, IBC, and OSHA, unless otherwise specified or indicated.

B. Working points on columns, beams, trusses, and braces shall be concentric, where connections of reasonable size and complexity are achievable. The design of connections shall take any eccentricity into account.

C. In heavy bracing systems, the Work points for deep beams, girders and columns may be moved to the top and bottom flanges of the deep beams and girders and to the face of the deep columns in order to simplify and reduce the size of the connection. In such a situation, the connection shall be designed for the secondary eccentric moments induced into the joint.

D. All substitutions by the Contractor of sections and modifications of details, with reasons therefore, shall be submitted with the Contractor's Shop Drawings for the Engineer's review and approval. Substitutions of sections, or modifications, and resulting changes in related portions of the Work shall be made without increase in the price of the Work.

E. Connections:

1. Design of connections not detailed on the Drawings shall be completed by the Contractor and detailed on the Shop Drawings. Unless otherwise approved by the Engineer, or shown on the Drawings, shop connections shall be welded and field connections shall be bolted.
2. High strength bolting shall conform to the latest edition of the "Research Council Specification for Structural Joints Using High Strength Bolts," as endorsed by AISC. Size of high strength bolts shall be 3/4-inch diameter for all high strength bolted connections, unless otherwise noted on the Drawings and shall have one plain hardened washer under the turned element (nut or bolt head) and one Direct

Tension Indicator washer. Hardened beveled washers shall be provided where sloped surfaces are greater than 1:20.

3. Field connections for secondary members, such as stairs, small freestanding platforms, ladders, handrails, guardrails, and girts, may be bearing type connections made with common bolts conforming to ASTM A307.
4. Minimum size of common bolts shall be 3/4-inch diameter, except for those bolts used to secure stair treads to stringers. These bolts shall be 3/8 inch diameter.
5. All connections shall be bearing type connections and threads need not be excluded from the shear plane. No oversize holes shall be used unless noted on the Drawings.
6. Shear connections on beams and girders shall be standard AISC connections unless special connections are required.

F. Grating:

1. Cutouts at columns and bracing gusset plates shall be detailed to clear the column and gusset plates by at least 1/4 inch. Grating shall be anchored to each supporting member with at least two anchoring devices. A minimum of four anchoring devices shall be provided with each piece of grating. Anchoring devices shall be supplied with 5 percent extra to cover losses. Galvanized saddle clips shall be provided and fastened with self-drilling, self-tapping, stainless steel screws by “ITW Buildex,” (TEKS Series), “or-equal,” approved.
2. Except as noted, banding bars shall be of the same cross-section as the bearing bars to which they are welded. Banding bars shall be provided as follows:
   a. At open ends of grating, removable grating, tops of ladders and approaches to platforms. At heads (tops) of stairs, the grating shall receive checkered plate nosing to match the stair tread nosing.
   b. At grating panels with four or fewer cross bars.
   c. At openings in grating for piping or similar penetrations in which the dimensions of the opening perpendicular to the bearing bars exceeds 4 inches. Openings for penetrations shown on the Drawings shall be cut and banded by the Contractor. Grating shall be split around the openings into easily removable sections. Unless otherwise shown on the design drawings, the openings shall be banded with material matching the bearing bar and extending 4 inches above the grating as shown on the Drawing.
   d. Clear gaps greater than or equal to 1 inch in openings around wide flange columns shall be banded with bars extending 4 inches above the grating.
3. All grating pieces shall be detailed and fabricated with nonslip tabs at the bottom to prevent slippage during erection.
4. All grating warped during fabrication or galvanizing shall be straightened prior to shipment. Each piece of grating, excluding stair

treads, shall be marked in the shop with a metal plate having raised letters. The plate shall be continuously tack-welded to each piece prior to galvanizing.

G. Handrails and Guardrails: Handrails and guardrails shall be fabricated in accordance with standard handrail/guardrail details. Rail shall be standard steel pipes with extra strong pipe for the posts spaced not more than 6 feet on centers, unless otherwise noted on design drawings. Materials shall be in accordance with ASTM A53, Type S, Grade B. Opposite posts on stair runs shall be in line. All welds shall be neatly finished and ground where necessary.

H. Ladders: Steel ladders shall be fabricated in accordance with standard ladders and safety gate details. Exposed ends of rails and sharp corners of brackets shall be neatly rounded, leaving no burrs or sharp edges.

2.03 GALVANIZED MATERIAL

A. All structural steel members, steel plate, grating, stair treads, handrails, guard rails, and ladders shall be galvanized.

B. All steel surfaces shall be prepared in accordance with SSPC-SP8 “Pickling” or SSPC-SP10, “Near-White Metal Blast Cleaning,” immediately prior to galvanizing.

C. All galvanizing shall be hot-dipped in accordance with ASTM A123 and ASTM A385, modified as follows:

1. Galvanizing shall be done after completion of all cutting, tapping, drilling, forming, punching and welding operations performed in the fabrication shop, but before any assembly by bolting. Bolts, nuts, and washers shall be hot dip galvanized in accordance with ASTM F2329, after all threads have been rolled or cut. Flat sheets shall be galvanized in accordance with ASTM A653. Contact surfaces of bolted connections shall be lightly scored by hand wire brush or blasting after galvanizing and prior to assembly.

D. Steel assemblies fabricated by welding, which are to be hot-dip galvanized after fabrication, shall be subject to the safeguards against warpage and distortion during hot-dip galvanizing that are recommended in ASTM A384.

1. After galvanizing, steel shall be checked and straightened to as true an alignment as is practical to attain, from any warpage, bending, twisting or distorting from the original without any injury to the galvanizing.

E. Material rejected by reason of defective coating shall have coating completely removed in acid bath before redipping. If any defective material is found upon receipt of material at destination, the Contractor shall replace this material free of charge FOB destination. Such replaced material shall be subject to inspection.

F. The Contractor shall be responsible that all galvanized material is straight, marked, and packed for shipment in accordance with this Specification. All material warped by galvanizing shall be straightened without injury to the galvanizing.

G. All pieces shall be legibly stamped before galvanizing with piece marks shown on the erection drawings, with the marking not less than 1-inch high placed in the same relative location on all pieces. The marking shall be plainly visible after galvanizing.

H. Metal decking shall be hot-dipped in accordance with ASTM A653.

I. Identification and Shipping: All pieces shall be stamped before galvanizing with piece marks shown on the erection drawings, with the marking not less than 3/4 inches high placed in the same relative location on all pieces. The marking shall be plainly visible after galvanizing.

J. Tension control bolts, nuts and washers shall be mechanically galvanized in accordance with ASTM F1852 and ASTM B695, Class 50.

PART 3 EXECUTION

3.01 FABRICATION

A. General:

1. The Engineer shall be notified before placing of mill orders and starting of fabrication.
2. Work shall be performed in conformance with the applicable portions of the AISC Specification for Structural Steel Buildings, the AISC Code of Standard Practice, the Engineer’s Drawings and erection drawings and Shop Drawings which are prepared by the Contractor and reviewed by the Engineer.
3. Fabrication tolerances shall conform to AISC Specification for Structural Steel Buildings, Section M2.7 and the AWS codes and as may be defined in the Drawings and Specifications and as required.
4. Material shall be fabricated and assembled in the shop to the greatest practical extent.

5. Materials which are distorted during fabrication or materials which are required to be fabricated to tolerances more restrictive than those set forth in ASTM A6 shall be adjusted by the Contractor using mechanical means and/or the application of heat.
6. Application of heat to materials shall be as specified in AWS D1.1.
   a. Steel may be flame cut by hand or machine. Use of machine method is preferred.
   b. Flame cut surfaces shall conform to tolerances set forth in AWS D1.1.

B. Bolting: Bolting shall conform to the "Research Council Specification for Structural Joints Using High-Strength Bolts" and to applicable AISC Standards and Specifications.

C. Welding:

1. Welding shall be performed in accordance with AWS D1.1.
2. All welding procedures shall be prepared by the Contractor as a written procedure specification and shall be submitted to the Engineer for review and approval prior to use.
3. All welders and tackers for the Work described herein shall be qualified in accordance with AWS D1.1. All inspectors used for visual weld inspection shall be certified in accordance with the provisions of AWS QC1, Specification for AWS Certification of Welding Inspectors. Personnel performing nondestructive testing shall be qualified in accordance with the current edition of American Society for Nondestructive Testing Recommended Practice No. SNT-TC-IA, NDT Level II.
4. Welding run-off tabs shall be cut off and ground smooth at the edge of the finished member.
5. Tack welds, which are not incorporated into the final weld, shall be removed and ground smooth.
6. Inadvertent arc strikes shall be removed by grinding.

D. In order to compensate for allowable camber or sweep in heavy rigid framing, special shop techniques such as shop layout to working lines shall be used.

E. Application of weldable studs shall be in accordance with manufacturer's printed instructions and in accordance with AWS D1.1 Stud Application Qualification Requirements, Section 7.6.

3.02 INSPECTION

A. Materials supplied and Work performed under this Specification may, at the Engineer's option, be inspected in the shop and shall be inspected in the field. The Contractor shall provide facilities for shop inspection, if requested by the Engineer, at no additional cost.

B. Material or Work not meeting the requirements specified herein shall be rejected and shall be replaced at the Contractor's expense. Where substandard welds occur or improper materials or procedures are noted, nondestructive examination shall be performed to determine the presence and extent of weld defects. The cost of the nondestructive examinations and weld repairs shall be borne by the Contractor.

C. The Contractor shall be responsible for all errors in detailing and fabrication and for correct fitting and attachment of structural members.

D. All shop welding shall be visually inspected by the Contractor and where noted on the design drawings, shop fillet welds shall be magnetic particle or dye-penetrant inspected and shop full penetration welds shall be ultrasonic tested in accordance with the procedures set forth in ASTM E165, ASTM E709, and AWS D1.1, respectively. The standard for acceptance shall be in accordance with AWS D1.1. If the weld is rejected, based on this standard, repairs shall be made in accordance with AWS D1.1 and retested by original method at Contractor's expense. The frequency of shop UT testing shall be as noted on the Engineer's Statement of Special Inspection drawing.

E. The cost of visual weld inspection and nondestructive testing is to be a part of the Contractor's fabrication expense. If AWS qualified inspectors are not a part of the Contractor's Quality Control Program, an independent testing lab shall be retained by Contractor at the Contractor's expense. The Contractor's inspectors shall <u>not</u> be involved in production work while acting as an inspector.

F. Reports of weld test results for the nondestructive examination program shall be submitted to the Engineer for review within 5 days after testing.

G. Mill test reports and certificates of conformance to the Specification requirements for all material to be incorporated in the Work shall be made available for inspection.

3.03 AUTHORITY TO REJECT

A. The Engineer shall have authority to reject all materials and workmanship not conforming to the Drawings and/or Specifications. Any *defective* material found during the progress of the Work shall be promptly replaced or corrected by the Contractor to the satisfaction of the Engineer.

3.04 LIABILITY FOR DEFECTIVE MATERIAL

A. If the Engineer, through oversight or otherwise, has accepted material or Work which is *defective* or contrary to these Specifications or design drawings, this material, no matter in what stage of completion, may be rejected by the Engineer.

3.05 PACKAGING AND SHIPPING

A. Different high-strength bolt diameters and lengths shall be packaged separately.

B. Common bolts of one length and diameter, and one type, loose nuts of each size, and flat and beveled hardened washers of each size shall be packaged separately.

C. Pins, small parts and small packages of bolts, flat and beveled hardened washers and nuts shall be shipped in boxes, crates, kegs, or barrels, but the gross weight of any package shall not exceed 300 pounds.

D. Particular attention shall be paid to protecting bolts and nuts from moisture and dirt.

E. A list and description of the contained material shall be plainly marked on the outside of each shipping container.

F. To facilitate the sorting and storing of steel as it is unloaded, each piece shall be marked to indicate the division of which it is a part.

G. Each shipment of material to the jobsite shall be accompanied by two copies of the mill test reports and certification of conformance to the Specification requirement for the material which is being delivered.

END OF SECTION

INTENTIONALLY LEFT BLANK

SECTION 05 52 19
STEEL RAILINGS

PART 1 GENERAL

1.01 REFERENCES

A. The following is a list of standards which may be referenced in this section:

1. American Iron and Steel Institute (AISI): As applicable.
2. ASTM International (ASTM):
   a. A36/A36M, Standard Specification for Carbon Structural Steel.
   b. A53/A53M, Standard Specification for Pipe, Steel, Black and Hot-Dipped, Zinc-Coated, Welded and Seamless.
   c. A123/A123M, Standard Specification for Zinc (Hot-Dip Galvanized) Coatings on Iron and Steel Products.
   d. A325, Standard Specification for Structural Bolts, Steel, Heat Treated, 120/105 ksi Minimum Tensile Strength.
   e. A500/A500M, Standard Specification for Cold-Formed Welded and Seamless Carbon Steel Structural Tubing in Rounds and Shapes.
   f. E894, Standard Test method for Anchorage of Permanent Metal Railing Systems and Rails for Buildings.
   g. E935, Standard Test Methods for Performance of Permanent Metal Railing Systems and Rails for Buildings.
   h. F1554, Standard Specification for Anchor Bolts, Steel, 36, 55, and 105-ksi Yield Strength.
3. International Code Council (ICC):
   a. 2021 International Building Code (IBC).
   b. Evaluation Services Reports, as applicable.
4. Occupational Safety and Health Act (OSHA): 29 CFR 1910, Code of Federal Regulations.

1.02 DEFINITIONS

A. ICC Evaluation Services Report: ICC report on evaluation of manufactured concrete anchor systems.

B. Railings: This term shall include guardrail systems, handrail systems, platform railing systems, ramp-rail systems, and stair-rail systems. Railings may be comprised of a framework of vertical, horizontal, or inclined members, grillwork or panels, accessories, or combination thereof.

C. Special Inspection: As defined by the ICC IBC.

D. Toeboards: Vertical barrier at floor level usually erected on railings along exposed edges of floor or wall openings, platforms, or ramps to prevent miscellaneous items from falling through.

1.03 SUBMITTALS

A. Action Submittals:

1. Shop Drawings:
   a. Project-specific scaled plans and elevations of railings and detail drawings. Include railing profiles, sizes, connections, anchorage, size and type of fasteners, and accessories.
   b. Manufacturer's literature and catalog data of railing and components.
   c. Design Data: Where proposed design of post base connections is different than details shown on the Drawings, submit calculations or test data for alternate railing anchorages using ICC IBC design loads.
   d. Submit proposed details for gate latch and stop for approval.
2. Samples:
   a. Rail sections, 6 inches long, showing each type of proposed connection, proposed finish, and workmanship.
   b. Each fitting, including wall brackets, castings, toeboard, and rail expansion joints.

B. Informational Submittals:

1. Manufacturer's assembly and installation instructions.
2. Special Inspection: Manufacturer's instructions for Special Inspection of post-installed concrete anchors.
3. Test Reports: Test data for anchorages may supplement design data submitted for alternate anchorage details. Testing of anchorages shall be in accordance with ASTM E894 and ASTM E935 using applied loads in accordance with the ICC IBC.

1.04 QUALITY ASSURANCE

A. Qualifications: Calculations required for alternate anchorage designs (if proposed) shall be stamped by a registered civil or structural engineer licensed in the state where the Project will be constructed.

1.05 DELIVERY, STORAGE, AND HANDLING

A. Railings adequately packaged and wrapped to prevent scratching and denting during shipment, storage, and installation. Maintain protective wrapping to the extent possible until railing is completely installed.

PART 2 PRODUCTS

2.01 STEEL RAILINGS

A. Pipe Railings/Round HSS:

1. Hot-dip galvanized carbon steel, ASTM A500/A500M Grade B.
2. Outside Diameter: 1.900 inch.
3. Wall Thickness:
   a. Rail: 0.145 inch, minimum.
   b. Post: 0.200 inch, minimum.

B. Accessories, including railing components, flanges, wall brackets, anchor plates, shall conform to the following:

1. Post Bolted Baseplate: Carbon steel ASTM A36/A36M, hot-dip galvanized.
2. Wall Brackets:
   a. Malleable iron, round top, and galvanized.
   b. Manufacturers and Products:
      1) The Wagner Companies; No. 1765.
      2) Julius Blum & Co., Inc.; No. 1382.
3. Rail Terminals (including Wall Returns):
   a. Round, galvanized steel, welded to rail, with two 5/16-inch holes for 1/4-inch fasteners.
   b. Manufacturer: The Wagner Companies.
4. Railing System Gate:
   a. As specified herein for galvanized steel pipe.
   b. Gate Hardware: Hot-dipped galvanized steel or AISI Type 304 or Type 316 stainless steel.
5. Railing Picket Panels and Clamps:
   a. Galvanized steel, solid bar or pipe meeting minimum requirements specified for pipe rails.
   b. Fasteners: Galvanized steel or stainless steel.
6. Toeboards and Accessories:
   a. ASTM A36/A36M steel, hot-dip galvanized.
   b. Toeboards: Provide slotted holes for expansion and contraction where required.
   c. Fasteners: Galvanized steel or stainless steel.

C. Metal supports embedded in concrete: In accordance with Section 05 05 19, Post-Installed Anchors.

D. Miscellaneous Fasteners: Galvanized steel or stainless steel.

2.02 ANCHOR BOLTS, FASTENERS, AND CONCRETE ANCHORS

A. Locknuts, Washers, and Screws:

1. Elastic Locknuts, Steel Flat Washers, Round Head Machine Screws (RHMS): Galvanized steel or stainless steel.
2. Flat Washers: Molded nylon.

B. Bolts and Nuts for Bolting Railing to Metal Beams: Hot-dipped galvanized ASTM A325 bolts.

C. Concrete Anchors:

1. Galvanized steel anchor rods conforming to ASTM F1554, Grade 36.
2. Post-installed anchors shall be in accordance with Section 05 05 19, Post-Installed Anchors, unless otherwise specified herein.
3. Bolt Diameter: 1/2 inch, minimum.

2.03 FABRICATION OF WELDED STEEL RAILINGS

A. Shop Assembly:

1. Post spacing and railing details shall be as shown on the Drawings.
2. Post to Baseplate Connection: Field fit-up is required as shown on the Drawings.
3. Alternate Post to Baseplate Connection:
    a. Field measure elevation of concrete at each post location and determine exact post length so baseplate is on concrete surface.
    b. Rails shall be in straight alignment when rails to posts and posts to baseplates are welded.
    c. Field weld posts to baseplates.
4. Remove burrs from cut edges.
5. Form elbow bends and wall returns to uniform radius, free from buckles and twists, with finished surfaces smooth.
6. Cover exposed ends of steel pipe by welding 1/8-inch minimum thickness steel plate in place or use prefabricated fittings.
7. Welding:
    a. In accordance with Section 05 05 23, Welding.
    b. Thoroughly fuse without undercutting or overlap.
    c. Remove splatter, grind exposed welds to blend, and contour surfaces to match those adjacent.
    d. Grind welds prior to hot-dip galvanizing of railing sections.
8. Furnish explosion prevention holes at closed ends of pipes.
9. Form and assemble joints exposed to weather to prevent water and moisture from penetrating.

B. Shop/Factory Finishing: After fabrication hot-dip galvanize steel components, other than stainless steel components, in accordance with ASTM A123/A123M.

C. Tolerances:

1. Cut pipe square within 2 degrees and lengths within 1/8 inch.
2. Welding: Miter and cope intersections of posts and rails within 2 degrees, fit to within 0.020 inch, and perform continuous welds around joints.

D. Repair of Defective Work: Remove stains and replace defective Work.

PART 3 EXECUTION

3.01 GENERAL

A. Where required, provide railing posts longer than needed and field cut to exact dimensions required in order to satisfy vertical variations on actual structure.

B. Install railing with base that provides plus or minus 1/4-inch vertical adjustment inside base fitting. If adjustment is required in field and exceeds plus or minus 1/4-inch, reduce post length not to exceed beyond bottom of lowest set-screw or bolt in base fitting.

C. Modification to supporting structure is not permitted where railing is to be attached.

D. Protection from Entrapped Water:

1. Make provisions in exterior and interior installations subject to high humidity to drain water from railing system.
2. For posts mounted in concrete, bends, and elbows occurring at low points drill weep holes of 1/4-inch diameter at lowest possible elevations, one hole per post or rail. Drill hole in plane of rail.

3.02 RAILING INSTALLATION

A. Expansion Joints:

1. Maximum intervals of 54 feet on center and at structural movement joints.
2. Slip joint with internal sleeve extending 2 inches beyond each side of joint. Provide 1/2-inch slip joint gap to allow for expansion.
3. Fasten to one side using 3/8-inch diameter set-screw. Place set-screw at bottom of pipe.

4. Locate joints within 12 inches of posts. Locate expansion joints in rails that span movement joints in structural walls and floors supporting the posts.

B. Posts and Rails:

1. Surface Mounted and Side Mounted Posts:
   a. Bolt post baseplate connectors firmly in place.
   b. Install to account for small variation in leveling grouts and shims between adjacent posts.
2. Set posts plumb and aligned to within 1/8 inch in 12 feet.
3. Set rails horizontal or parallel to slope of steps to within 1/8 inch in 12 feet.
4. Install posts and rails in same plane.
5. Remove projections or irregularities and provide a smooth surface for sliding hands continuously along top rail.
6. Use offset rail for use on stairs and platforms if post is attached to web of stringers or structural platform supports.
7. Support 1-1/2-inch rails directly above stairway stringers with offset fittings.

C. Wall Brackets: Support wall rails on brackets as shown on the Drawings.

D. Toeboard:

1. Provide at railings, except where 4 inch or higher concrete curbs are installed, at gates, or on stairways unless shown otherwise.
2. Accurately measure in field for correct length; after railing post installation, cut and secure to posts.
3. Dimension between bottom of toeboard and walking surface not to exceed 1/4 inch.
4. Install plumb and aligned to within 1/8 inch in 12 feet.

E. Railing System Gate: Install in accordance with manufacturer's installation instructions.

3.03 FIELD FINISHING

A. Corrosion Protection: Prevent galvanic action and other forms of corrosion caused from direct contact with concrete and dissimilar metals by coating metal surfaces as specified in Section 09 90 01, Painting and Protective Coatings.

B. Treatment of Field Welds for Galvanized Steel Railings: Touch up welds by application of two coats high-zinc dust content paint to dry film thickness of 2 mils.

3.04 FIELD QUALITY ASSURANCE AND QUALITY CONTROL

A. Post-installed anchors supporting railing systems require special inspection.

B. Owner-Furnished Quality Assurance, in accordance with IBC Chapter 17 requirements, is provided in the Statement of Special Inspections Plan in Supplement located at end of Section 01 45 33, Special Inspection, Observation, and Testing. Contractor responsibilities and related information are included in Section 01 45 33, Special Inspection, Observation, and Testing.

C. Contractor-Furnished Quality Control: Inspection and testing as required in Section 01 45 16.13, Contractor Quality Control.

3.05 CLEANING

A. Wash railing system thoroughly using clean water and soap. Rinse with clean water.

B. Do not use acid solution, steel wool, or other harsh abrasive.

END OF SECTION

INTENTIONALLY LEFT BLANK

SECTION 05 53 00
METAL GRATINGS

PART 1 GENERAL

1.01 REFERENCES

A. The following is a list of standards which may be referenced in this section:

1. ASTM International (ASTM):
   a. A36/A36M, Standard Specification for Carbon Structural Steel.
   b. A666, Standard Specification for Annealed or Cold-Worked Austenitic Stainless Steel Sheet, Strip, Plate, and Flat Bar.
   c. A1011/A1011M, Standard Specification for Steel, Sheet and Strip, Hot-Rolled, Carbon, Structural, High-Strength Low-Alloy, High-Strength Low-Alloy with Improved Formability, and Ultra-High Strength.
   d. B221, Standard Specification for Aluminum and Aluminum-Alloy Extruded Bars, Rods, Wire, Profiles, and Tubes.
2. National Association of Architectural Metal Manufacturers (NAAMM):
   a. MBG 531, Metal Bar Grating Manual.
   b. MBG 532, Heavy-Duty Metal Bar Grating Manual.

1.02 SUBMITTALS

A. Action Submittals:

1. Shop Drawings:
   a. Grating: Show dimensions, weight, size, and location of connections to adjacent grating, supports, and other Work.
   b. Grating Anchorage: Show details of anchorage to supports to prevent displacement from traffic impact.
   c. Product data for grating, grating clips, anchors, accessories, and other manufactured products specified herein.
   d. Manufacturer’s specifications, including coatings, surface treatment, and finishes.
2. Samples: Two Samples of grating approximately 4 inches by 8 inches, showing at least four crossbars each and four bearing bars each. One Sample shall be retained at Site to be used as a basis for acceptance or rejection of grating installed.

B. Informational Submittals:

1. Special handling and storage requirements.
2. Installation instructions.

1.03 DELIVERY, STORAGE, AND HANDLING

A. Insofar as is practical, factory assembled items.

B. Package and clearly tag parts and assemblies that are, due to necessity, shipped unassembled.

PART 2 PRODUCTS

2.01 MANUFACTURERS

A. Materials, equipment, and accessories specified in this section shall be products of:

1. Alabama Metal Industries Corporation (AMICO), Birmingham, AL.
2. HARSCO Industrial IKG, Houston, TX.
3. Ohio Gratings, Inc., Canton, OH.

2.02 GRATING MATERIALS

A. Carbon Steel:

1. Bearing Bars, Banding, and Rectangular Cross Bars: ASTM A1011/A1011M commercial steel Type II for hot rolled carbon steel sheet and strip, or ASTM A36/A36M.
2. Cross Bars made from Wire Rods: Not permitted.
3. Finish: Galvanized after fabrication.

2.03 METAL BAR GRATING

A. General Requirements:

1. Maximum Service Load:
   a. Light Duty (Type A): 100 psf uniformly distributed load.
2. Maximum Deflection: Span/240 or 1/4 inch, whichever is less.
3. Bearing Bar Spacing:
   a. Light Duty: 1-3/16-inch maximum, center-to-center.
4. Cross Bar Spacing: 2 inches maximum, center-to-center.
5. Bearing Bars, Cross Bars and Banding: Minimum thickness as specified in NAAMM MBG 531 or as shown on the Drawings.

B. Grating Materials: Galvanized steel welded, rectangular bar grating fabricated by electro-forging cross bars to bearing bars pressure-locked rectangular bar grating fabricated by pressing rectangular crossbars into slots in rectangular bearing bars pressure-locked rectangular bar grating fabricated by swaging crossbars between rectangular bearing bars.

C. Surface:

1. Serrated.
2. When surface of bars is serrated provide 1/4-inch deeper bearing bars than shown on the Drawings to maintain specified load carrying capacity of grating.

2.04 HEAVY-DUTY METAL BAR GRATING (TYPE C)

A. General Requirements:

1. Maximum Service Load: AASHTO H-20.
2. Maximum Deflection: Span/240.
3. Bearing Bar Spacing: 1-7/8-inch maximum center-to-center.
4. Cross Bar Spacing: 4 inches maximum center-to-center.
5. Bearing Bars, Cross Bars and Banding: Minimum thickness as specified in NAAMM MBG 532 or as shown on the Drawings.
6. Grating Type: Galvanized steel, heavy-duty, rectangular bar grating fabricated by welding crossbars between rectangular bearing bars or pressing deep rectangular crossbars into slots in rectangular bearing bars.

2.05 ACCESSORIES

A. Embedded Frames: As indicated on the Drawings and as specified in Section 05 50 00, Metal Fabrications.

B. Grating Clamps:

1. Use at flanged beam and bolted angle frame supports.
2. Removable from above grating walkway surface.
3. Provide hat bracket, recessed bolt, and bottom clamp of same material as grating.
4. Manufacturers and Products:
   a. Direct Metals Company, LLC, Kennesaw, GA; Grating Clamp.
   b. Grating Fasteners, Inc., Harvey, LA; G-Clip.

C. Anchor Stud and Saddle Clip:

1. Use at embedded angle frame supports with stud anchor and nut recessed below top of grating surface.
2. Removable from above grating walkway surface.
3. Provide Type 316 stainless steel welded threaded stud anchor, nut, washer, and saddle clip.

4. Manufacturers and Products:
   a. Welded Stud Anchor:
      1) Nelson Stud Welding, Inc., Elyria, OH.
      2) Stud Welding Associates, Inc. Elyria, OH.
   b. Saddle Clip:
      1) Direct Metals Company, LLC, Kennesaw, GA; Saddle Clip.
      2) Grating Fasteners, Inc., Harvey, LA; Saddle Clip.
      3) Struct-Fast, Inc., Baltimore, MD; Gratefast.

2.06 FABRICATION

A. General:

1. In accordance with NAAMM MBG 531 or NAAMM MBG 532.
2. Do not weld aluminum grating.
3. Conceal fastenings where practical.
4. Drill metalwork and countersink holes as required for attaching hardware or other materials.
5. Cutouts:
   a. Fabricate in grating sections for penetrations indicated.
   b. Arrange to permit grating removal without disturbing items penetrating grating.
   c. Edge band openings in grating that interrupt four or more bearing bars with bars of same size and material as bearing bars.
6. Do not notch bearing bars at supports to maintain elevation.
7. Field measure areas to receive grating. Verify dimensions of new fabricated supports, and fabricate to dimension required for specified clearances.
8. Section Length: Sufficient to prevent section from falling through clear opening when oriented in the span direction and one end is touching either the concrete or the vertical leg of grating support.
9. Minimum Bearing: 1 inch for grating depth up to 2-1/4 inches and 2 inches for grating depth greater than 2-1/4 inches.
10. Banding and Toe Plates: Same material as grating and welded to bearing bars in accordance with requirements of NAAMM MBG 531 and NAAMM MBG 532.

B. Metal Bar Grating: A single grating section shall be not less than 1.5 feet or greater than 3 feet in width, or weigh more than 150 pounds.

C. Heavy Duty Metal Bar Grating: Minimum width of grating sections shall be 2 feet regardless of length and weight.

D. Supports:

1. Same material as grating, except that supports which are to be embedded in concrete shall be hot dip galvanized, unless part of an extruded aluminum system.

2. Coordinate dimensions and fabrication with grating to be supported.
3. Coordinate dimensions with increased depth due to serrations.

PART 3 EXECUTION

3.01 PREPARATION

A. Electrolytic Protection:

1. Protect aluminum surfaces in contact with dissimilar metals, or embedded or in contact with masonry, grout, or concrete as specified in Section 09 90 01, Painting and Protective Coatings.
2. Allow paint to dry before installation of material.

3.02 INSTALLATION

A. Until grating sections are securely fastened in place, area shall be appropriately barricaded or flagged to alert people working in the area of potential fall hazard.

B. Install manufactured products in accordance with manufacturer's recommendations.

C. Install supports such that grating sections have a solid bearing on both ends, and that grating sections shall not rock or wobble under design loads.

D. Install grating supports plumb and level as applicable.

E. Install sections of welded frames with anchors to straight plane without offsets.

F. Field locate and install fasteners to fit grating layout.

G. Anchor grating securely to supports using minimum of four fastener clips and bolts per grating section.

H. Each grating or plank section shall be easily removable and replaceable.

I. Completed installation shall be rigid and neat in appearance.

J. Protect painted and galvanized surfaces during installation.

K. Repair damaged coatings as specified in Section 09 90 01, Painting and Protective Coatings.

END OF SECTION

INTENTIONALLY LEFT BLANK

SECTION 09 90 01
PAINTING AND PROTECTIVE COATINGS

PART 1 GENERAL

1.01 SCOPE

A. Section includes: all materials, labor, and equipment necessary to prepare surfaces to be coated, apply protective coatings, and properly cure and finish protective coatings for the Site equipment, structural steel, miscellaneous platforms and supports, CMU walls, piping, pipe supports, and plate ductwork.

1.02 DEFINITIONS

A. Terms used in this section:

1. Coverage: Total minimum dry film thickness in mils or square feet per gallon.
2. FRP: Fiberglass Reinforced Plastic.
3. HCl: Hydrochloric Acid.
4. MDFT: Minimum Dry Film Thickness, mils.
5. MDFTPC: Minimum Dry Film Thickness Per Coat, mils.
6. Mil: Thousandth of an inch.
7. PSDS: Paint System Data Sheet.
8. PVC: Polyvinyl Chloride.
9. SFPG: Square Feet per Gallon.
10. SFPGPC: Square Feet per Gallon per Coat.
11. SP: Surface Preparation.

1.03 REFERENCES

A. The following is a list of standards, which may be referenced in this section:

1. American National Standards Institute (ANSI):
   a. Standard Colors for Color Identification and Coding.
   b. A13.1, Scheme for the Identification of Piping Systems.
2. American Water Works Association (AWWA):
   a. C203, Coal-Tar Protective Coatings and Linings for Steel Water Pipe.
   b. C209, Cold-Applied Tape Coatings for Steel Water Pipe, Special Sections, Connections, and Fittings.
   c. C214, Tape Coating Systems for Steel Water Pipe.
3. NACE International: SP0188-2006, Discontinuity (Holiday) Testing of New Protective Coatings on Conductive Substrates.
4. Occupational Safety and Health Act (OSHA).

5. The Society for Protective Coatings (SSPC):
    a. SP 1, Solvent Cleaning.
    b. SP 2, Hand Tool Cleaning.
    c. SP 3, Power Tool Cleaning.
    d. SP 5, White Metal Blast Cleaning.
    e. SP 6, Commercial Blast Cleaning.
    f. SP 7, Brush-Off Blast Cleaning.
    g. SP 10, Near-White Blast Cleaning.
    h. PA 1, Shop, Field, and Maintenance Painting.
    i. PA 2, Procedure for Determining Conformance to Dry Coating Thickness Requirements.
    j. PA 3, Guide to Safety in Paint Applications.

1.04 SUBMITTALS

A. Action Submittals:

1. Shop Drawings:
    a. Data Sheets:
        1) For each paint system, furnish a Paint System Data Sheet (PSDS), Material Safety Data Sheet (MSDS), the manufacturer's technical data sheets, and paint colors available (where applicable) for each product used in paint system. The PSDS form is appended to the end of this section.
        2) Technical and performance information that demonstrate compliance with Specification.
        3) Submit required information on a system-by-system basis.
        4) Furnish copies of paint system submittals to the coating applicator.
        5) Indiscriminate submittal of manufacturer's literature only is not acceptable.
    b. Detailed chemical and gradation analysis for each proposed abrasive material.

B. Informational Submittals:

1. Applicator's Qualification: List of references substantiating experience.
2. Coating manufacturer's Certificate of Compliance stating coating system meets or exceeds requirements specified.
3. Factory Applied Coatings: Manufacturer's certification stating factory applied coating system meets or exceeds requirements specified.
4. If the manufacturer of finish coating differs from that of shop primer, provide finish coating manufacturer's written confirmation that materials are compatible.

5. Manufacturer's written instructions and special details for applying each type of paint.
6. Manufacturer's written verification that submitted material is suitable for the intended use.

1.05 QUALITY ASSURANCE

A. Qualifications:

1. Applicator: Minimum 5 years' experience in application of specified products.

B. Regulatory Requirements:

1. Meet federal, state, and local requirements limiting the emission of volatile organic compounds.
2. Perform surface preparation and painting in accordance with recommendations of the following:
   a. Paint manufacturer's instructions.
   b. SSPC PA 3, Guide to Safety in Paint Applications.
   c. Federal, state, and local agencies having jurisdiction.

C. Mockup:

1. Before proceeding with Work under this section, finish one complete space or item of each color scheme required showing selected colors, finish texture, materials, quality of Work, and special details.
2. After Engineer approval, sample spaces or items shall serve as a standard for similar Work throughout the Project.

1.06 DELIVERY, STORAGE, AND HANDLING

A. Shipping:

1. Where precoated items are to be shipped to the site, protect coating from damage. Batten coated items to prevent abrasion.
2. Shop painted surfaces shall be protected during shipment and handling by suitable provisions including padding, blocking, and use of canvas or nylon slings.

B. Storage:

1. Store products in a protected area that is heated or cooled to maintain temperatures within the range recommended by paint manufacturer.
2. Primed surfaces shall not be exposed to weather for more than 2 months before being topcoated, or less time if recommended by coating manufacturer.

1.07 PROJECT CONDITIONS

A. Environmental Requirements:

1. Do not apply paint in temperatures or moisture conditions outside of manufacturer's recommended maximum or minimum allowable.
2. Do not perform final abrasive blast cleaning whenever relative humidity exceeds 85 percent, or whenever surface temperature is less than 5 degrees F above dew point of ambient air.

PART 2 PRODUCTS

2.01 MANUFACTURERS

A. Nationally recognized manufacturers of paints and protective coatings who are regularly engaged in the production of such materials for essentially identical service conditions.

B. Minimum of 5 years' verifiable experience in manufacture of specified product.

2.02 ABRASIVE MATERIALS

A. Select abrasive type and size to produce surface profile that meets coating manufacturer's recommendations for specific primer and coating system to be applied.

2.03 PAINT MATERIALS

A. General:

1. Manufacturer's highest quality products suitable for intended service.
2. Compatibility: Only compatible materials from a single manufacturer shall be used in the Work. Particular attention shall be directed to compatibility of primers and finish coats.
3. Thinners, Cleaners, Driers, and Other Additives: As recommended by coating manufacturer.

B. Products:

Product	Definition
Bituminous Paint	Single-component, coal-tar pitch based.
Coal-Tar Epoxy	Amine, polyamide, or phenolic epoxy type 70% volume solids minimum, suitable for immersion service.
Epoxy Filler/Surfacer	100% solids epoxy trowel grade filler and surfacer, nonshrinking, suitable for application to concrete and masonry. Approved for potable water contact and conforming to NSF 61, where required.
Epoxy Phenolic	Two-component phenolic/novolac epoxy coating specifically designed to provide a corrosion resistant barrier when used to protect steel beneath thermal insulation. Capable of providing corrosion protection in both atmospheric service and under thermal insulation operating in thermal cyclical conditions up to 400 degrees F.
Epoxy Primer – Ferrous Metal	Anticorrosive, converted epoxy primer containing rust-inhibitive pigments.
Epoxy Primer – Other	Epoxy primer, high-build, as recommended by coating manufacturer for specific galvanized metal, copper, or nonferrous metal alloy to be coated.
High Heat	High temperature resistant coating specifically designed to provide a corrosion resistant barrier when used to protect steel beneath thermal insulation. Capable of providing corrosion protection in both atmospheric service and under thermal insulation operating in thermal cyclical conditions up to 1200 degrees F.
Universal Primer	Epoxy or other type coating capable of application over a variety of generic coatings and can be top-coated with a variety of generic coatings without lifting or blistering.
Inorganic Zinc Primer	Solvent or water based, having 85 percent metallic zinc content in the dry film; follow manufacturer's recommendation for topcoating.
Polyurethane Enamel	Two-component, aliphatic or acrylic based polyurethane; high gloss finish.

Product	Definition
Silicone/Silicone Acrylic	Elevated temperature silicone or silicone/acrylic based.
Silicone Zinc Dust Primer	High temperature, corrosion resistant primer formulated from silicone resins and zinc dust.
Air Drying Silicone Coating	Air drying, high temperature silicone resin formulation, suitable for operating temperatures to 1,200 degrees F.
Water Base Epoxy	Two-component, polyamide epoxy emulsion, finish as required.

2.04 MIXING

A. Multiple-Component Coatings:

1. Prepare using each component as packaged by paint manufacturer.
2. No partial batches shall be permitted.
3. Do not use multiple-component coatings that have been mixed beyond their pot life.
4. Furnish small quantity kits for touchup painting and for painting other small areas.
5. Mix only components specified and furnished by paint manufacturer.
6. Do not intermix additional components for reasons of color or otherwise, even within the same generic type of coating.

B. Colors: Formulate paints with colorants free of lead, lead compounds, or other materials that might be affected by presence of hydrogen sulfide or other gas likely to be present at site.

2.05 SHOP FINISHES

A. Shop Blast Cleaning: Reference paragraph Shop Coating Requirements, this section.

B. Shop Coating Requirements:

1. When required by equipment specifications, such equipment shall be primed and finish coated in shop by manufacturer and touched up in field with identical material after installation.
2. Where manufacturer’s standard coating is not suitable for intended service condition, Engineer may approve use of a tie-coat to be used between manufacturer’s standard coating and specified field finish. In such cases, tie-coat shall be surface tolerant epoxy as recommended by manufacturer of specified field finish coat. Coordinate details of equipment manufacturer’s standard coating with field coating manufacturer.

PART 3 EXECUTION

3.01 EXAMINATION

A. Factory Finished Items:

1. Schedule inspection with Engineer before repairing damaged factory-finished items delivered to site.
2. Repair abraded or otherwise damaged areas on factory-finished items as recommended by coating manufacturer. Carefully blend repaired areas into original finish. If required to match colors, provide full finish coat in field.

B. Surface Preparation Verification: Inspect and provide substrate surfaces prepared in accordance with these Specifications and printed directions and recommendations of paint manufacturer whose product is to be applied. The more stringent requirements shall apply.

3.02 PROTECTION OF ITEMS NOT TO BE PAINTED

A. Remove, mask, or otherwise protect hardware, lighting fixtures, switch plates, aluminum surfaces, machined surfaces, couplings, shafts, bearings, nameplates on machinery, and other surfaces not specified elsewhere to be painted.

B. Provide drop cloths to prevent paint materials from falling on or marring adjacent surfaces.

C. Protect working parts of mechanical and electrical equipment from damage during surface preparation and painting process.

D. Mask openings in motors to prevent paint and other materials from entering.

E. Protect all surfaces adjacent to, or downwind of Work area from overspray.

3.03 SURFACE PREPARATION

A. Field Abrasive Blasting:

1. Perform blasting for items and equipment where specified and as required to restore damaged surfaces previously shop or field blasted and primed or coated.
2. Refer to coating systems for degree of abrasive blasting required.
3. Where the specified degree of surface preparation differs from manufacturer’s recommendations, the more stringent shall apply.

B. Metal Surface Preparation:

1. Where indicated, meet requirements of SSPC Specifications summarized below:
    a. SP1, Solvent Cleaning: Removal of all visible oil, grease, soil, drawing and cutting compounds, and other soluble contaminants by cleaning with solvent.
    b. SP2, Hand Tool Cleaning: Removal of loose rust, loose mill scale, loose paint, and other loose detrimental foreign matter, using nonpower hand tools.
    c. SP3, Power Tool Cleaning: Removal of loose rust, loose mill scale, loose paint, and other loose detrimental foreign matter, using power-assisted hand tools.
    d. SP5, White metal Blast Cleaning: Removal of all visible oil, grease, dust, dirt, mill scale, rust, coatings, oxides, corrosion products, and other foreign matter by blast cleaning.
    e. SP6, Commercial Blast Cleaning: Removal of all visible oil, grease, dust, dirt, mill scale, rust, coatings, oxides, corrosion products, and other foreign matter, except for random staining limited to no more than 33 percent of each unit area of surface which may consist of light shadows, slight streaks, or minor discolorations caused by stains of rust, stains of mill scale, or stains of previously applied coatings.
    f. SP 7, Brush-Off Blast Cleaning: Removal of visible rust, oil, grease, soil, dust, loose mill scale, loose rust, and loose coatings. Tightly adherent mill scale, rust, and coating may remain on surface.
    g. SP10, Near-White Blast Cleaning: Removal of all visible oil, grease, dust, dirt, mill scale, rust, coatings, oxides, corrosion products, and other foreign matter, except for random staining limited to no more than 5 percent of each unit area of surface which may consist of light shadows, slight streaks, or minor discolorations caused by stains of rust, stains of mill scale, or stains of previously applied coatings.
2. The words “solvent cleaning”, “hand tool cleaning”, “wire brushing”, and “blast cleaning”, or similar words of equal intent in these Specifications or in paint manufacturer’s specification refer to the applicable SSPC Specification.
3. Where OSHA or EPA regulations preclude standard abrasive blast cleaning, wet or vacu-blast methods may be required. Coating manufacturers’ recommendations for wet blast additives and first coat application shall apply.
4. Ductile Iron Pipe Supplied with Asphaltic Varnish Finish: Remove asphaltic varnish finish prior to performing specified surface preparation.

5. Hand tool clean areas that cannot be cleaned by power tool cleaning.
6. Round or chamfer sharp edges and grind smooth burrs, jagged edges, and surface defects.
7. Welds and Adjacent Areas:
    a. Prepare such that there is:
        1) No undercutting or reverse ridges on weld bead.
        2) No weld spatter on or adjacent to weld or any area to be painted.
        3) No sharp peaks or ridges along weld bead.
    b. Grind embedded pieces of electrode or wire flush with adjacent surface of weld bead.
8. Pre-Blast Cleaning Requirements:
    a. Remove oil, grease, welding fluxes, and other surface contaminants prior to blast cleaning.
    b. Cleaning Methods: Steam, open flame, hot water, or cold water with appropriate detergent additives followed with clean water rinsing.
    c. Clean small isolated areas as above or solvent clean with suitable solvent and clean cloth.
9. Blast Cleaning Requirements:
    a. Type of Equipment and Speed of Travel: Design to obtain specified degree of cleanliness. Minimum surface preparation is as specified herein and takes precedence over coating manufacturer's recommendations.
    b. Select type and size of abrasive to produce surface profile that meets coating manufacturer's recommendations for particular primer to be used.
    c. Use only dry blast cleaning methods.
    d. Do not reuse abrasive, except for designed recyclable systems.
    e. Meet applicable federal, state, and local air pollution and environmental control regulations for blast cleaning, confined space entry (if required), and disposition of spent aggregate and debris.
10. Post-Blast Cleaning and Other Cleaning Requirements:
    a. Clean surfaces of dust and residual particles from cleaning operations by dry (no oil or water vapor) air blast cleaning or other method prior to painting. Vacuum clean enclosed areas and other areas where dust settling is a problem and wipe with a tack cloth.
    b. Paint surfaces the same day they are blasted. Re-blast surfaces that have started to rust before they are painted.

C. Galvanized Metal, Copper, and Nonferrous Metal Alloy Surface Preparation:

1. Remove soil, cement spatter, and other surface dirt with appropriate hand or power tools.

2. Remove oil and grease by wiping or scrubbing surface with suitable solvent, rag, and brush. Use clean solvent and clean rag for final wiping to avoid contaminating surface.
3. Obtain and follow coating manufacturer's recommendations for additional preparation that may be required.

D. Masonry Surface Preparation:

1. Complete and cure masonry construction for 14 days or more before starting surface preparation work.
2. Remove oil, grease, dirt, salts or other chemicals, loose materials, or other foreign matter by solvent, detergent washing, or other suitable cleaning methods.
3. Clean masonry surfaces of mortar and grout spillage and other surface deposits using one of the following:
    a. Nonmetallic fiber brushes and commercial muriatic acid followed by rinsing with clean water.
    b. Brush-off blasting.
    c. Water blasting.
4. Do not damage masonry mortar joints or adjacent surfaces.
5. Leave surfaces clean and, unless otherwise required for proper adhesion, dry prior to painting.
6. Masonry Surfaces to be Painted: Uniform texture and free of surface imperfections that would impair intended finished appearance.
7. Masonry Surfaces to be Clear Coated: Free of discolorations and uniform in texture after cleaning.

E. Existing Painted Surfaces to be Repainted Surface Preparation:

1. Detergent wash and freshwater rinse.
2. Clean loose, abraded, or damaged coatings to substrate by hand or power tool, SP 2 or SP 3.
3. Feather surrounding intact coating.
4. Apply one spot coat of specified primer to bare areas, overlapping prepared existing coating.
5. Apply one full finish coat of specified primer to entire surface.
6. If an aged, plural-component material is to be topcoated, contact coating manufacturer for additional surface preparation requirements.
7. Application of Cosmetic Coat:
    a. It is assumed that existing coatings have oxidized sufficiently to prevent lifting or peeling when overcoated with paints specified.
    b. Check compatibility by application to a small area prior to starting painting.
    c. If lifting or other problems occur, request disposition from coating manufacturer.
8. Perform blasting as required to restore damaged surfaces. Materials, equipment, procedures shall meet requirements of SSPC.

3.04 SURFACE CLEANING

A. Brush-off Blast Cleaning:

1. Equipment, procedure, and degree of cleaning shall meet requirements of SSPC SP 7.
2. Abrasive: Either wet or dry blasting sand, grit, or nutshell.
3. Select various surface preparation parameters, such as size and hardness of abrasive, nozzle size, air pressure, and nozzle distance from surface such that surface is cleaned without pitting, chipping, or other damage.
4. Verify parameter selection by blast cleaning a trial area that shall not be exposed to view.
5. Review acceptable trial blast cleaned area and use area as a representative sample of surface preparation.
6. Repair or replace surface damaged by blast cleaning.

B. Solvent Cleaning:

1. Consists of removal of foreign matter such as oil, grease, soil, drawing and cutting compounds, and any other surface contaminants by using solvents, emulsions, cleaning compounds, steam cleaning, or similar materials and methods, which involve a solvent or cleaning action.
2. Meets requirements of SSPC SP 1.

3.05 APPLICATION

A. General:

1. The intention of these Specifications is for new, interior and exterior metal surfaces to be painted, whether specifically mentioned or not, except as specified otherwise.
2. Apply coatings in accordance with these Specifications and paint manufacturers' printed recommendations and special details. The more stringent requirements shall apply. Allow sufficient time between coats to assure thorough drying of previously applied paint.
3. Vacuum clean surfaces free of loose particles. Use tack cloth just prior to applying next coat.
4. Coat units or surfaces to be bolted together or joined closely to structures or to one another prior to assembly or installation.
5. On pipelines, terminate coatings along pipe runs to 1 inch inside pipe penetrations.
6. Keep paint materials sealed when not in use.
7. Where more than one coat is applied within a given system, alternate colors to provide a visual reference showing required number of coats have been applied.

B. Porous Surfaces, Such as Concrete and Masonry:

1. Filler/Surfacer: Use coating manufacturer's recommended product to fill air holes, bug holes, and other surface voids or defects.
2. Prime Coat: May be thinned to provide maximum penetration and adhesion.
   a. Type and Amount of Thinning: Determined by paint manufacturer and dependent on surface density and type of coating.
3. Surface Specified to Receive Water Base Coating: Damp, but free of running water, just prior to application of coating.

C. Galvanized Metal, Copper, and Nonferrous Metal Alloys:

1. Concealed galvanized, copper, and nonferrous metal alloy surfaces (behind building panels or walls) do not require painting, unless specifically indicated herein.
2. Prepare surface and apply primer in accordance with System No. 10 specification.
3. Apply intermediate and finish coats of the coating system appropriate for the exposure.

D. Film Thickness and Coverage:

1. Number of Coats:
   a. Minimum required without regard to coating thickness.
   b. Additional coats may be required to obtain minimum required paint thickness, depending on method of application, differences in manufacturers' products, and atmospheric conditions.
2. Application Thickness:
   a. Do not exceed coating manufacturer's recommendations.
   b. Measure using a wet film thickness gauge to ensure proper coating thickness during application.
3. Film Thickness Measurements and Electrical Inspection of Coated Surfaces:
   a. Perform with properly calibrated instruments.
   b. Recoat and repair as necessary for compliance with Specification.
   c. All coats are subject to inspection by Engineer and coating manufacturer's representative.
4. Visually inspect concrete, masonry, nonferrous metal, plastic, and wood surfaces to ensure proper and complete coverage has been attained.
5. Give particular attention to edges, angles, flanges, and other similar areas, where insufficient film thicknesses are likely to be present, and ensure proper millage in these areas.
6. Apply additional coats as required to achieve complete hiding of underlying coats. Hiding shall be so complete that additional coats would not increase the hiding.

3.06 PROTECTIVE COATINGS SYSTEMS

A. System No. 5 Exposed Metal – Mildly Corrosive, 250 Degrees F Maximum:

Surface Prep.	Paint Material	Min. Coats, Cover
SP10 Near-White Blast Cleaning	Epoxy Primer – Ferrous Metal	1 coat, 4-6 MDFT
	Polyurethane Enamel	1 coat, 4-6 MDFT

B. System No. 9 Special Coatings – Metal:

Surface Prep.	Paint Material	Min. Coats, Cover
	Primer: Shop-primed with inorganic zinc	1 coat, 3 MDFT
Wash to remove dirt from shop-primed surface	Polyamide Epoxy	1 coat, 4-6 MDFT

C. System No. 9A Previously Painted Metal:

Surface Prep.	Paint Material	Min. Coats, Cover
SP2 or SP3	Universal Primer	1 coat, 2-3 MDFT
	Polyamide Epoxy	1 coat, 4-6 MDFT

D. System No. 9B Steel Pipe Piles:

Surface Prep.	Paint Material	Min. Coats, Cover
SP10	Fast Set Polyurethane – Poly-Cote 110 or Equiv.	1 coat, 100 MDFT

E. System No. 10 Galvanized Metal, Copper, and Nonferrous Metal Alloy Conditioning:

Surface Prep.	Paint Material	Min. Coats, Cover
In accordance with paragraph Galvanized Metal, Copper, and Nonferrous Metal Alloy Surface Preparation	Epoxy Primer – Other	As recommended by the coating manufacturer Remaining coats as required for exposure

F. System No. 14 High Heat-Resistant – 1200 Degrees F Maximum:

Surface Prep.	Paint Material	Min. Coats, Cover
SP10 Near White Blast Cleaning	High Heat	2 coat, 8-10 MDFT

1. Specification is based on Jotun Jatatemp 650. Consult manufacturer for the latest technical advice. Alternate Suppliers may be approved by the Engineer.

G. System No. 15 Heat-Resistant – 400 Degrees F Maximum:

Surface Prep.	Paint Material	Min. Coats, Cover
SP10 Near White Blast Cleaning	Epoxy Phenolic	2 coat, 8-12 MDFT

1. Specification is based on Jotun Epoxy HR. Consult manufacturer for the latest technical advice. Alternate Suppliers may be approved by the Engineer.

H. System No. 27 Aluminum and Dissimilar Metal Insulation:

Surface Prep.	Paint Material	Min. Coats, Cover
Solvent Clean (SP1)	Prime in accordance with manufacturer's recommendations	
	Bituminous Paint	1 coat, 10 MDFT

I. System No. 117 Concrete Masonry, Gloss Epoxy:

Surface Prep.	Paint Material	Min. Coats, Cover
In accordance with Paragraph Masonry Surface Preparation	Block Filler	1 coat, 75 SFPG
	Water Base Epoxy (Gloss)	2 coats, 300 SFPGPC

1. Use on the following items or areas: CMU walls.

3.07 COLORS

A. Provide colors per paint schedule at the end of this section or as selected by Owner.

B. Proprietary identification of colors is for identification only. Selected manufacturer may supply matches.

C. Pipe and Equipment Colors:

1. Equipment includes the machinery or vessel itself plus the structural supports and fasteners.
2. Paint equipment one color as selected by Owner.
3. Paint piping systems per the paint schedule at the end of this section or as selected by Owner.

3.08 FIELD QUALITY CONTROL

A. Testing Equipment:

1. Provide magnetic type dry film thickness gauge to test coating thickness specified in mils, as manufactured by Nordson Corp., Anaheim, CA, Mikrotest.
2. Provide low-voltage wet sponge electrical holiday detector to test completed coating systems, 20 mils dry film thickness or less, except zinc primer, high-build elastomeric coatings, and galvanizing, for pinholes, holidays, and discontinuities, as manufactured by Tinker and Rasor, San Gabriel, CA, Model M-1.
3. Provide high-voltage spark tester to test completed coating systems in excess of 20 mils dry film thickness. Unit to be as recommended by coating manufacturer.

B. Testing:

1. Thickness and Continuity Testing:
   a. Measure coating thickness specified in mils with a magnetic type, dry film thickness gauge, in accordance with SSPC PA 2. Check each coat for correct millage. Do not make measurement before a minimum of 8 hours after application of coating.
   b. Holiday detect coatings 20 mils thick or less, except zinc primer and galvanizing, with low voltage wet sponge electrical holiday detector in accordance with NACE RP0188.
   c. Holiday detect coatings in excess of 20 mils dry with high voltage spark tester as recommended by coating manufacturer and in accordance with NACE SP0188-2006.
   d. After repaired and recoated areas have dried sufficiently, retest each repaired area. Final tests may also be conducted by Engineer.

C. Inspection: If requested by Engineer, leave staging and lighting in place until Engineer has inspected surface or coating. Replace staging removed prior to approval by Engineer. Provide additional staging and lighting as requested by Engineer.

D. Unsatisfactory Application:

1. If item has an improper finish color or insufficient film thickness, clean surface and topcoat with specified paint material to obtain specified color and coverage. Obtain specific surface preparation information from coating manufacturer.
2. Evidence of runs, bridges, shiners, laps, or other imperfections is cause for rejection.
3. Repair defects in accordance with written recommendations of coating manufacturer.

E. Damaged Coatings, Pinholes, and Holidays:

1. Feather edges and repair in accordance with recommendations of paint manufacturer.
2. Remove rust and contaminants from metal surface. Provide surface cleanliness and profile in accordance with surface preparation requirements for specified paint system.
3. Hand or power sand visible areas of chipped, peeled, or abraded paint, and feather the edges. Follow with primer and finish coat. Depending on extent of repair and appearance, a finish sanding and topcoat may be required.
4. Apply finish coats, including touchup and damage-repair coats in a manner that shall present a uniform texture and color-matched appearance.

3.09 CLEANUP

A. Place cloths and waste that might constitute a fire hazard in closed metal containers or destroy at end of each day.

B. Upon completion of the Work, remove staging, scaffolding, and containers from site or destroy in a legal manner.

C. Remove paint spots, oil, or stains upon adjacent surfaces and floors and leave entire job clean.

3.10 APPLICATION SCHEDULE

A. Surfaces Not Requiring Painting: Unless otherwise stated or shown below or in other sections, the following areas or items shall not require painting or coating:

1. Concrete surfaces.
2. Reinforcing steel.

3. Nonferrous and corrosion-resistant ferrous alloys such as copper, bronze, Monel, aluminum, chromium plate, atmospherically exposed weathering steel, and stainless steel, except where:
   a. Required for electrical insulation between dissimilar metals.
   b. Aluminum and stainless steel are embedded in concrete or masonry, or aluminum is in contact with concrete or masonry.
   c. Color coding of equipment and piping is required.
4. Nonmetallic materials such as glass, wood, and porcelain, except as required for architectural painting or color coding.
5. Prefinished electrical and architectural items such as motor control centers, switchboards, switchgear, panelboards, transformers, disconnect switches (if prefinished in OSHA yellow), acoustical tile, cabinets, elevators, building louvers, and wall panels; color coding of equipment is required.
6. Electrical conduits.
7. Cathodic protection anodes.
8. Items specified to be galvanized after fabrication, unless specified elsewhere.

B. Unless otherwise shown or specified, paint surfaces in accordance with the following application schedule. In the event of discrepancies or omissions in the following, request clarification from Engineer before starting work in question.

C. System No. 5 Exposed Metal – Mildly Corrosive: Use on the following items or areas: Exposed metal surfaces, new, located inside or outside of structures and exposed to weather or in a highly humid atmosphere, such as pipe galleries and similar areas. For uninsulated piping and equipment operating at temperatures up to 250 degrees F maximum.

D. System No. 9 Special Coatings – Metal: Use on the following items or areas: Structural and miscellaneous steel that has been shop primed with inorganic zinc primer.

E. System No. 9A Previously Painted Metal: Use to repaint finish painted item only when directed to do so by Engineer.

F. System No. 10 Galvanized Metal, Copper, and Nonferrous Metal Alloy Conditioning: Use on the following items or areas:

1. Galvanized surfaces requiring painting.
2. After application of System No. 10, apply finish coats as required for exposure.

G. System No. 14 High Heat-Resistant: 1200 Degrees F Maximum: Use on the following items or areas: For insulated (or uninsulated) piping, equipment, and ductwork operating at temperatures up to 1200 degrees F maximum. This system shall be specifically designed for protecting against corrosion under insulation.

H. System No. 15 Heat-Resistant: 400 Degrees F Maximum: Use on the following items or areas: For insulated (or uninsulated) piping, equipment, and ductwork operating at temperatures to 400 degrees F maximum. This system shall be specifically designed for protecting against corrosion under insulation.

I. System No. 27 Aluminum and Dissimilar Metal Insulation: Use on aluminum surfaces embedded or in contact with concrete.

J. System No. 117 Concrete Masonry, Gloss Epoxy: Use on new or existing interior concrete masonry walls.

3.11 SUPPLEMENTS

A. The supplements listed below, following “End of Section,” are a part of this Specification:

1. Paint System Data Sheet (PSDS).
2. Painting Schedule.

END OF SECTION

PAINT SYSTEM DATA SHEET

Complete and attach manufacturer's Technical Data Sheet to this PSDS for each coating system.

Paint System Number (from Spec.):		
Paint System Title (from Spec.):		
Coating Supplier:		
Representative:		
Surface Preparation:		
Paint Material (Generic)	**Product Name/Number (Proprietary)**	**Min. Coats, Coverage**

Provide manufacturer's recommendations for the following parameters at temperature (F)/relative humidity:

Temperature/RH	**50/50**	**70/30**	**90/25**
Induction Time			
Pot Life			
Shelf Life			
Drying Time			
Curing Time			
Min. Recoat Time			
Max. Recoat Time			

Provide manufacturer's recommendations for the following:

Mixing Ratio: _____

Maximum Permissible Thinning:_____

Ambient Temperature Limitations: min.:_____ max.:_____

Surface Temperature Limitations: min.:_____ max.:_____

Surface Profile Requirements: min.:_____ max.:_____

Attach additional sheets detailing manufacturer's recommended storage requirements and holiday testing procedures.

PAINTING SCHEDULE

EQUIPMENT/ MATERIAL DESCRIPTION	SHOP PAINTING			FIELD PAINTING		FINISH COLOR	REMARKS
	PRIMER	INTERMEDIATE COAT	FINISH	FINISH COAT	TOUCHUP COAT		
Miscellaneous Pipe Supports	Manu. Std.	Manu. Std.	Manu. Std.	None	Manu. Std.	Manu. Std.	Subject to Engineer's Approval
Structural Steel and Platforms	Refer to Section 05 12 00, Supply and Fabrication of Structural and Miscellaneous Steel						Field Touchup at Field Welds or Damaged Areas
Steel Pipe Piles	System No. 9B			None	Yes	Off White	See Contract Drawings for Dimensions
CMU Walls				System No. 117, Section 09 90 01, Painting and Protective Coatings		Per Owner	

INTENTIONALLY LEFT BLANK

SECTION 13 30 00
STAGING AND LIFTING PLAN

PART 1 GENERAL

1.01 SCOPE

A. This Specification is intendent to provide minimum requirements to the Contractor for the staging, rigging, and lifting of heavy lift equipment.

B. Staging area(s) shall be defined by the Contractor and coordinated with the Engineer and Owner. Emphasis is given to coordination due to extensive underground utilities that are subject to adverse impact from unplanned surface level heavy loading.

C. The Contractor shall be responsible for the method of transporting heavy lift equipment to the project area. The maximum vehicle axle load is AASHTO HS20.

D. The Contractor shall be responsible for preparing Staging and Lifting Plans to ensure that all lifting and rigging work is performed in a safe and controlled manner. Any lifts required for this Project classified as a critical lift (Refer to paragraph 1.02.B below) require that Contractor submit a comprehensive lift plan which is subject to review and approval by the Engineer/Owner prior to initiating lifting operations.

1.02 DEFINITIONS

A. Crane: Lifting devices that are capable of being dynamically loaded when lifting, loading or shifting loads by means of a projecting and/or swinging boom and movable lifting blocks.

B. Critical Lift: A lift is classified as critical if dropping, upset or collision could cause or result in serious economic consequences, unacceptable delay to schedule or other significant deleterious programmatic impact, undetectable damage that would jeopardize future operations or safety of a facility, personnel injury or significant adverse health impact, either onsite or offsite. In addition, a lift that meets one of the following criteria shall be designated as a critical lift:

1. Any lift that requires the use of multiple cranes.
2. Any lift that exceeds 75 percent of the crane’s rated capacity within the lift configuration of the crane.
3. The item to be lifted requires exceptional care in handling because of size, weight, close-tolerance installation, high susceptibility to damage or other unusual factor.

4. The item, although non-critical, requires exceptional care in handling because it is being lifted above or adjacent to a critical item.
5. Any lift that is adjacent to, or in the vicinity of Owner's existing facilities.

1.03 REFERENCES

A. The following is a list of standards which may be referenced in this section:

1. ANSI/ASME B30 Safety Standards for Cableways, Cranes, Derricks, Hoist, Jacks and Slings. (Note: B30 reference a series of standards specific to Lifting and rigging Equipment.
2. OSHA, U.S. Department of Labor, 29 CFR 126.1400, "Crane and Derricks".
3. OSHA, U.S. Department of Labor, 29 CFR 1926.753, "Hoisting and rigging".

1.04 REQUIREMENTS

A. Design loads. (Equipment):

1. Dead Load of equipment shall be derived from Certified Vendor data.
2. Maximum Wind Speed shall be as defined in Section 01 61 00, Common Product Requirements.

B. The Contractor shall be responsible for locating and protecting underground utilities and manholes.

C. The maximum vehicle axle load is ASSHTO HS20.

D. The Contractor shall develop a Staging, Lifting, and Rigging plan ("Lifting Plan") along with a JSA (Job Safety Analysis) before beginning any lifting operations.

E. Critical Lifting Plan Requirements:

1. Submit separate lift plans for each individual lift or group of lifts a minimum of fourteen days in advance of planned lifting activities.
2. Include a schedule and time outage of roads/area closure affected by the rigging and lifting activities.

3. Each lift plan shall be based on specific crane staging locations with a plan view/aerial photo provided with a scale version of the crane and boom illustrated (i.e., swing radius/fall zones). The plan needs to identify the lifts occurring from those staging locations. A single plan with multiple location illustrations is also acceptable (i.e., same lift, different location. Individual and combined lift plans are acceptable.
    a. If a combined lift plan is to be provided:
        1) Base a combined lift plan on the heaviest component to be lifted.
        2) Provide a sketch of crane location, lift/fall radius and boom angle for each location.
        3) Base crane loading calculations on the worst-case boom angle and heaviest load. A table with a line item for each lift is an acceptable means to document the data for each location and each item.
        4) Provide rigging sketches/calculations for each type of item to be lifted (for example, six identical items, one rigging sketch shall suffice, with a different sketch provided for other items).
        5) Provide a narrative describing the step-by-step plan for each type of lift.
        6) Provide crane/rigging capacity calculations/information as required for a single lift.
4. The plan is to include sketches showing lifting points, methods of attachment, sling angles, load vectors, boom and swing angles, sheave configuration, crane orientations, related capacities, and other factors affecting the equipment and lifting operation.
5. Provide calculations (worksheet) of calculated working loads on all components and comparison to ratings/capacities of all lifting equipment (cut sheets) including the crane capacity charts and all rigging.
6. The type, size, model, lifting capacity of the crane to be used.
7. A list of items to be lifted/moved, including a description of each item's weight, dimensions, center of gravity, and presence of hazardous toxic materials.
8. The name of the Operator, Rigger and Competent Person and verification of Operator Certification. If such personnel are subsequently changed, submit new personnel name and verification of Operator Certification via RFI a minimum 48 hours prior to the lift.

9. Crane loads / pick weights shall be limited to 75 percent of listed crane capacities unless specific Owner approval has been obtained for unique circumstances. Considerations for wind operations shall further reduce the lift capacity in accordance with the crane manufacturers specifications.
10. A pre-lift meeting to review the plan, shall be held before the actual lift, and be attended by the operator, rigger(s), competent person, Owner and others as required.

1.05 SUBMITTALS

A. Contractor shall submit the Staging, Critical lifting and rigging plan along with a JSA signed and stamped by a Registered Professional Engineer licensed in the state of Louisiana to the Owner for review.

1.06 SAFETY

A. The following safety precautions shall be followed when personnel are involved in lifting and rigging operations but not limited to the list below.

1. Survey the staging area for any overhead power lines or other potential hazards.
2. Verify soils loading capability is sufficient to support the crane and load.
3. In severe weather conditions Crane operations shall be stopped and all equipment and construction material shall be secured in the staging area. All crane booms shall be dropped to the ground or, in the case of road-mobile cranes, returned to their traveling positions.
4. Barricade staging area during lifting and rigging stage.
5. Workers shall review and understand the JSA.
6. Lifting equipment and work area shall be kept free of trash, oil, and grease.

PART 2 PRODUCTS (NOT USED)

PART 3 EXECUTION (NOT USED)

END OF SECTION

SECTION 15 34 42
UNDERGROUND PIPING

PART 1 GENERAL

1.01 SUMMARY

A. This section covers minimum requirements for the installation of complete piping systems. Installation includes procurement, packaging, furnishing, receiving, storing, handling, fabrication, assembly, erection, supporting, cleaning, coating, filling, flushing, non-destructive examination, testing, restoration and inspection of complete underground piping systems.

B. In the event of any apparent conflict between this section and other referenced sections, codes, standards, and documents Contractor shall refer the conflict to Engineer in writing for resolution.

C. No departures shall be made from this Specification and referenced sections, codes, standards and documents unless particular requirements are waived or modified in writing by Engineer. Contractor shall submit written requests for departures to Engineer for approval. Following the list of exceptions, if any, Contractor shall add a statement that no other exceptions are taken to this Specification.

1.02 DEFINITIONS

A. The following terms shall be understood to mean:

1. Large Bore Pipe (LB): Piping NPS 2-1/2 inch and larger.
2. Small Bore Pipe (SB): Piping NPS 2 inch and smaller.

1.03 REFERENCES

A. The following is a list of standards which may be referenced in this section:

1. State and Local Codes.
2. American National Standards Institute (ANSI): B31.1, Power Piping.
3. American Society of Mechanical Engineers (ASME).
4. American Society for Testing and Materials (ASTM):
   a. D422, Standard Test Method for Particle-Size Analysis of Soils.
   b. D448, Standard Classification for Sizes of Aggregate for Road and Bridge Construction.
   c. D1140, Standard Test Methods for Determining the Amount of Material Finer than 75-μm (No. 200) Sieve in Soils by Washing.
   d. D1557, Standard Test Methods for Laboratory Compaction Characteristics of Soil Using Modified Effort (56,000 ft-lbf/ft^3 (2,700 kN-m/m^3)).

e. D4253, Standard Test Methods for Maximum Index Density and Unit Weight of Soils Using a Vibratory Table.

5. American Water Works Association (AWWA):
   a. 203, Coal-Tar Protective Coatings and Linings for Steel Water Pipe.
   b. C209, Tape Coatings for Steel Water Pipe and Fittings.
   c. C210, Liquid-Epoxy Coatings and Linings for Steel Water Pipe and Fittings.
   d. C213-07, Fusion-Bonded Epoxy Coatings and Linings for Steel Water Pipe and Fittings.
   e. C216, Heat-Shrinkable Cross-Linked Polyolefin Coatings for Steel Water Pipe and Fittings.
   f. C217, Microcrystalline Wax and Petrolatum Tape Coatings Systems for Steel Water Pipe and Fittings.
   g. C651, Disinfecting Water Mains.
   h. C652, Disinfection of Water-Storage Facilities.
6. Factory Mutual (FM).
7. Manufacturers Standardization Society of the Valve and Fittings Industry (MSS): SP-25, Standard Marking System for Valves, Fittings, Flanges, and Unions.
8. National Association of Corrosion Engineers (NACE): SP0394, Application, Performance, and Quality Control of Plant-Applied Single-Layer Fusion-Bonded Epoxy External Pipe Coating.
9. National Fire Protection Association (NFPA): 24, Standard for the Installation of Private Fire Service Mains and Their Appurtenances.
10. Pipe Fabrication Institute (PFI):
    a. ES-3, Fabricating Tolerances.
    b. ES-11, Permanent Marking on Piping Materials.
11. Steel Structures Painting Council (SSPC): SP-6, Commercial Blast Cleaning.
12. UL.
13. Occupational Safety and Health Act (OSHA).

1.04 REFERENCE SECTIONS

A. Section 01 33 00, Submittal Procedures.
B. Section 31 20 00, Earthwork
C. Section 31 23 16, Excavation
D. Section 31 23 23, Fill and Backfill
E. Section 31 41 00, Shoring
F. Section 40 50 20 Aboveground Power Plant Piping.
G. Section 48 00 10, Mechanical Summary of Work.
H. Section 48 50 90, Cathodic Protection.
I. Section 48 58 68, Welding of Power Plant Piping.

1.05 SUBMITTALS

A. In accordance with Section 01 33 00, Submittal Procedures.

B. Information Submittals:

1. Drawing list and submittal schedule.
2. Fabrication, testing, and commissioning sequence schedule.
3. Expediting reports.
4. Certified Material Test Reports (CMTRs).
5. Heat and lot numbers, which provide traceability for materials.
6. Manufacturer's Certificate of Compliance.
7. Spool Drawings for all piping that Contractor has shop fabricated.
8. Weld repair records complete with evaluations.
9. Weld maps for all field welds including the unique welder's identification symbol described in Section 48 58 68, Welding of Power Plant Piping, and the date the Work was performed.
10. Evaluations of radiographic film (RT), ultrasonic examinations (UT), liquid penetrant examinations (PT), and magnetic particle examinations (MT) and any other examinations performed. Radiographic evaluations shall show date, line number, weld identification symbol, film number, serial number, film combinations, interpretations, and other pertinent information for each weld radiographed.
11. NDE reports to document RT, UT, PT, MT and visual (VT) weld examinations.
12. Pressure test reports, containing at least the following information:
    a. Complete description of pipe system including boundary limits, complete line numbers, Drawings and P&ID's indicating test boundaries.
    b. Test description including test pressure, test medium, temperature of test medium, ambient temperature, time of day, test duration, leakage rate, and date of test.
    c. Record of joint repairs including date, extent of repairs, and responsible individual.
    d. Record of cleaning including date and responsible individual.
    e. Signature, date, and title of Engineer's or Owner's representative witnessing operation.

C. Action Submittals:

1. Contractor's Quality Control Manual and Quality Assurance Manual.
2. Inspection and Test Plan (ITP).
3. Inspector and NDE personnel qualifications.
4. Welding Procedure Specifications and Welding Performance Qualification Test results in accordance with ASME B31.1, Appendix III.

5. Fabrication Procedures, including but not limited to:
    a. Cutting procedures.
    b. Welding procedures.
    c. Hot work procedures (specifically around operating equipment).
    d. Bending procedures.
    e. Pre-heat and Post-weld Heat Treatment (PWHT) procedures.
    f. NDE procedures.
    g. PMI procedures.
    h. Cleaning and blasting procedures.
    i. Painting procedures.
    j. Testing procedures.
    k. Commissioning procedures.
6. Manufacturer's data sheets or catalog cut sheets for purchased piping components and in-line devices and recommendations for handling, storage, and installation of components.
7. Internal cleaning/flushing procedures (including steam blow, hydrolyzing, fuel gas air blows, etc.).
8. Pressure testing procedures.
9. Cleaning/Flushing fluid data.
10. Testing fluid data.
11. Record Drawing mark ups of Engineer furnished Drawings showing any modifications made by Contractor in field. Mark-ups shall be legible and made with red pen on Engineer's Drawings.
12. Manufacturer's Data Report (MDR), including but not limited to:
    a. Cover Page.
    b. Table of Contents.
    c. Inspection Release Certificate.
    d. Relevant documents such as mill certificates, weld maps, completed ITPs, test results, etc.
    e. Deviations, concessions, and Nonconformity Reports (if applicable).

1.06 QUALITY ASSURANCE

A. If applicable, welders and welding procedures shall be in accordance with Section 48 58 68, Welding of Power Plant Piping.

1.07 DELIVERY, STORAGE, AND HANDLING

A. Effective precautions, such as capping and sealing, shall be exercised to protect all flanges, weld ends, and other parts of piping against dirt or damage during transit or outdoor storage.

B. The ends of all fabricated assemblies shall be protected by use of a metal or plastic cap at each end. Carbon steel material shall not be used for protection of weld end preparations on stainless steel. No welding to the parent metal shall be performed for capping or sealing.

C. All pipes and components shall be adequately protected from damage during handling and shipment. Handling equipment, blocking, strapping, or hold-down devices shall be applied so as not to mar the components in any way. During shipment, components shall be further separated by dunnage as may be necessary to prevent damage.

D. Contractor shall furnish written procedures to govern the handling and storage of pipes and components to prevent degradation. These shall include recommendations for on-site storage.

E. Piping shall be stored aboveground on Contractor's furnished dunnage. Use sufficient number of supports to prevent pipe from sagging or coming into contact with ground. Either contoured or padded blocks shall also be used with coated pipe to prevent damage to coatings.

F. If pipe shall be partially or completely submerged due to rainfall, or any other cause, pipe shall be carefully examined, and water, together with any dirt, trash, or other foreign matter that may have entered shall be removed. Internal of pipe shall be blast cleaned back to original and wall thickness checked.

G. All pipes and components shall be legibly marked with identifying pipeline number and piece number as called out on the appropriate spool piece drawings in accordance with MSS SP-25 and PFI ES-11.

H. Contractor shall repair damaged pipe, fittings, specialty items, coatings, linings, etc. to Engineers' satisfaction at no extra cost.

I. Contractor shall remove and replace damaged items not repaired to Engineers' satisfaction.

1.08 FURNISHED BY CONTRACTOR

A. Contractor shall furnish all labor, materials, tools, and equipment required for the completion of the following work as specified herein.

1. Supply, fabricate and install all piping systems designated and shown on the Contract Drawings, including pipe, valves, specialties, fittings, flanges, bolts, nuts, washers, gaskets, caps, and the pressure containing parts of other piping components.
2. Furnish documentation.
3. Perform cleaning and/or coating and painting of all piping components.
4. Ship and deliver all piping and accessories to jobsite.
5. Install piping including trench excavation, backfilling and compaction.
6. Perform testing.
7. Perform all required cleaning and finishing.
8. Furnish and install valve pits/vaults and manholes, thrust blocks, pipe supports and support foundations.

B. The Contractor's responsibility for scope of supply shall be as indicated on the Contract Drawings.

C. Piping furnished by Contractor shall be installed as shown in the Contract Drawings.

1.09 SITE CONDITIONS

A. Refer to Contract Documents.

1.10 WARRANTY

A. Refer to Contract Documents for general warranty requirements.

PART 2 PRODUCTS

2.01 MATERIALS AND WELDING

A. Materials for pipe, fittings, and all accessories shall be in strict accordance with the requirements as specified in the applicable piping classification sheets. Material specifications are included in Supplements to this document. The included specifications are:

1. HC01 Carbon Steel, CL 150 (reference Supplement 2 Pipe Specification Tables within Section 40 50 20 Aboveground Power Plant Piping).
2. YHD Double Wall Pipe w/Containment and Leak Detection.

B. Materials for pipes, fittings, and accessories shall be new and shall be in accordance with the applicable design code. Welded attachments shall be made of materials compatible to piping. Where the material for a specific component is not specified, it shall be selected by Contractor for approval by Engineer.

C. Welding for all piping and repair welding for all weld defects shall be in accordance with the requirements of ANSI B31.1, AWWA, and Section 48 58 68, Welding of Power Plant Piping.

D. Double Wall Fuel Oil Piping System:

1. Provide double wall piping system complete with carrier pipe, containment pipe, interstitial supports, leak detection sensor and alarm system, and provisions for manual verification and clean out of containment pipe.

2. Carrier Pipe:
    a. Shall meet requirements of ASME B31.1, as described in the Pipe Specifications YHD.
3. Containment Pipe:
    a. Shall be designed to same design pressure and temperature as carrier pipe.
    b. Pipe wall thickness of containment pipe shall be based on 0.063 in corrosion allowance.
    c. Shall be designed to allow for drainage to collection points. Drainage collection points shall be able to be manually checked for leaks.
4. Provide and install sensor stations with drip legs and risers.
5. Underground to aboveground interfaces shall include flange insulating kits.
6. Leak Detection Panel:
    a. For remodel alarm modules, provide Raychem nVent TTA-SIM2-120 Alarm Module, “or-equal”. The panels shall be suited for outdoor installation.
    b. Contractor to provide TTDM-128 Master Module, “or-equal”. Contractor to integrate the master module with an existing alarm module, installed under a separate contract. The panels shall be suited for outdoor installation.

2.02 EQUIPMENT

A. Pipe Fabrication:

1. The Contractor shall determine degree of shop pre-fabrication for 2-1/2 inch and larger piping.
2. All piping fabrication shall be in accordance with the tolerances specified in PFI Standard ES-3.
3. Pipe fabrication and assembly shall be by welding, except where flanged joints, screwed connections, or other types of mechanical joints are indicated on the Contract Drawings or specified in the applicable Piping Classification Sheets. The piping shall be of maximum available commercial lengths. Where a run of pipe is less than available mill random lengths, one piece shall be used. Where a run of pipe is greater than available mill-random lengths, one non-mill-random length may be used in the run.
4. Dimensional requirements for fittings, flanges and gaskets, and bolting shall be as specified in applicable Piping Classification Sheets. All elbows, unless other specified on the Contract Drawings, shall be long radius.
5. All free ends of steel pipe and fabricated piping spools shall be properly prepared as indicated in applicable Piping Classification Sheets.

2.03 COMPONENT

A. Joints:

1. All weld joint design shall be in accordance with the Drawing, "Weld End Preparation for Pipe and Piping Components for ANSI B31.1" and as specified in applicable Piping Classification Sheet.
2. Joints for non-metallic piping shall be in accordance with the Manufacturer's installation procedures.

B. Thermal Cutting: Thermal cutting and gouging shall be in accordance with Section 48 58 68, Welding of Power Plant Piping.

C. Branch Connections: All branch connections shall be in accordance with the requirements specified in applicable Piping Classification Sheets.

D. Welded Attachments:

1. Contractor's scope shall include the furnishing and installation of welded attachments on pipes.
2. Welded attachments shall include lugs, brackets, and similar devices welded to pipe, supports, anchors, guides and insulation supports. Weld procedures used to attach such devices shall be compatible with the base material. Where base material requires stress relief, attachment welds shall receive stress relief heat treatment. Welded attachments material shall be compatible with the piping material.

2.04 CIVIL AND STRUCTURAL

A. Refer to Contract Documents for general Civil and Structural requirements.

2.05 FABRICATION

A. Refer to Section 09 90 01, Painting Protective Coatings, and Design Drawings for painting and coating requirements.

B. Cleaning and Painting

1. All piping sections shall be thoroughly cleaned of mill scale, heat treating scale, heavy oxide, slag, flux, weld splatter, oil, grease, organic matter, dirt or any other foreign materials.
2. Surface preparation for all steel shall be in accordance with Steel Structure Painting Council Specification SSPC-SP-6 "Commercial Blast Cleaning" as a minimum requirement.
3. Grit blast cleaning shall be employed as required. The surface of the component shall be blast cleaned no longer than 8 hours prior to coating the component. Sand blasting is not permitted.
4. Lube oil piping shall be thoroughly cleaned by pickling, then rinsed and coated with a rust preventative. Rust preventative used shall be compatible with the fluid of the system.
5. External surfaces of uninsulated carbon steel and alloy steel piping, with the exception of machined surfaces and edges prepared for field welding

for a distance of 1-1/2 inches from the weld edge, shall be given one shop coat of corrosion resistant primer capable of withstanding temperatures to the design temperature plus 50 degrees F without loss of protective integrity. The primer shall be in accordance with Section 09 90 01, Painting Protective Coatings.

6. Paint shall be applied in accordance with SSPC-PA1 “Shop, Field and Maintenance Painting of Steel.”
7. Surface preparation, paint and application shall be compatible, and shall be in accordance with paint manufacturer’s recommendations.
8. Prime coating is not required on piping which will be insulated, as identified in the Piping Liner List.
9. External machined surfaces and edges prepared for field welding shall be protected against corrosion during shipment, storage and installation with one coat of rust inhibiting coating (Deoxalumnite “or-equal” approved) applied after inspection and cleaning.
10. Stainless steel, copper, or non-metallic piping shall not be painted or coated, but shall be wrapped in kraft paper, polyethylene, or crated.
11. All of the above work shall be done in accordance with Contractor’s written procedures.

2.06 SOURCE QUALITY CONTROL

A. Contractor shall employ such quality assurance measures as are necessary to ensure that the Work conforms to this Specification.

PART 3 EXECUTION

3.01 FIELD QUALITY CONTROL

A. General:

1. Inspect, examine, clean, and test piping in accordance with requirements of ASME B31.1, Chapter VI, and this section.
2. Procedures shall be subject to approval of Engineer.
3. Owner will witness each critical operation (e.g., pressure testing, steam blow, hydrolazing, cleaning and drying).

B. Welded Joint Inspection and Testing: In accordance with Section 48 58 68, Welding of Power Plant Piping.

C. Material Tests: Contractor shall maintain a file of certified Mill Test Reports of all materials or components used in fabrication of piping covered by this section of the Specification. This file shall be shipped to Owner after all piping has been shipped.

D. Shop Tests:

1. In addition to Contractor's standard shop tests and inspections, nondestructive examinations shall be performed in accordance with the requirements and acceptance standards of ANSI B31.1, AWWA, Section 48 58 68, Welding of Power Plant Piping.
2. Tests shall be performed by the Contractor as required per code and as described herein.
3. All fire protection piping shall be flushed and tested in accordance with Chapter 9 of NFPA 24.

E. Examination:

1. Locate pipe routing shown on the Drawings and verify routing to be free from interference with structural, mechanical, and/or electrical features prior to installation. Notify Owner immediately of any potential routing problems.
2. Verify trenches are excavated to the lines and grades as shown on the Drawings.
3. Prior to installation, each joint of pipe shall be inspected and any unsound or damaged pipe shall be repaired or rejected at the discretion of the Owner.
4. The fuel oil pipe coatings shall be tested as per NACE RP0490 Holiday Detection of Fusion Bonded Epoxy External Pipeline Coatings.
5. All other pipe coatings shall be tested as per Section-5 of AWWA C203/ C116 / C209/ C210.

F. Pressure Tests:

1. Perform pressure and leakage test after completing pipe installation. Each leak test performed shall be recorded and documented in form MT-1 "HYDROSTATIC OR PNEUMATIC LEAK TEST."
2. Pressure testing of fire hydrant protection piping shall be in accordance with NFPA-24 and acceptable to local Fire Marshall.
3. Fuel Oil Pipe: Single and double wall fuel oil pipe shall be hydrotested, prior to backfill as applicable. Both the carrier and interstitial space between carrier and containment pipe shall be hydrotested to the same test pressure.

3.02 FIELD TESTS

A. Nondestructive Examinations:

1. Nondestructive examinations shall be performed in accordance with Chapter VI of ASME B31.1.
2. Any piping weld not hydrostatically tested or made after hydrostatic testing shall be radiographed.

3. Contractor shall prepare and maintain a record of each nondestructive examination made.

B. Leak Testing:

1. Leak testing (both hydrostatic and pneumatic testing) of piping shall be performed in accordance with the requirements of Chapter VI of ASME B31.1.
2. Piping for water and steam systems having a design pressure of 30 psig and greater or subject to vacuum conditions shall be hydrostatically leak tested.
3. Piping for fuel oil, lube oil, and hydrogen, and piping for air and carbon dioxide having a design pressure of 30 psig and greater or subject to vacuum conditions, shall be pneumatically leak tested.
4. All permanent pipe hangers and supports shall be installed and spring hangers set for testing before filling piping with water for hydrostatic testing.
5. All piping system restraints shall be installed before test pressures are applied.
6. Portions of systems subject to different test pressures shall be isolated and tested separately.
7. For systems which are subject to vacuum conditions, Contractor shall first check all valve packing and seals to ensure that they will take the positive internal test pressure.
8. All necessary preparations shall be taken prior to hydrostatic testing to ensure that all welded joints are exposed, any additional supports to take the water weight are in place on the steam lines, and any piping components or equipment not to be subjected to the test pressure are suitably isolated from the system.
9. Hydrostatic testing water temperature shall not be less than 70 degrees F for all ASME Section I piping and all (carbon steel and ferritic alloy steel) piping 6 inches and larger nominal size with wall thickness greater than 5/8 inch.
10. All water used for hydrostatic testing shall be demineralized water unless allowed or directed otherwise by Owner. Demineralized water shall be furnished by Contractor.
11. Piping to be insulated shall be leak tested before being insulated. Coated and wrapped piping shall be leak tested prior to application of coating and wrapping of field joints and/or fittings.
12. After leak testing and before burying, coated and wrapped piping shall be subjected to holiday testing in accordance with applicable piping specifications. The complete area of the pipe shall be tested, whether the coating is shop or field applied. Contractor shall repair and retest all unacceptable areas attributable to installation at no additional cost to Owner.
13. Hydrostatic test pressures shall be applied at a minimum of 1.5 times the system design pressures and shall be held for a minimum of 20 minutes

and such additional time as may be necessary to examine all possible leakage points.

14. Pneumatic test pressures shall be applied at a minimum of 1.20 but not more than 1.25 times the system design pressures and shall be held for a minimum of 20 minutes and such additional time as may be necessary to examine all possible leakage points.
15. Application of pneumatic pressure in testing shall be in gradual states up to one-half of the ultimate test pressure so that early detection of serious leaks may be made and restricted; thereafter, the pressure shall be raised at increments of one-tenth of test pressure until final pressure is reached.
16. All leaks detected during testing attributable to installation shall be repaired and retested by Contractor at no additional cost to Owner.
17. Each leak test performed shall be recorded and documented in form MT 1 "HYDROSTATIC OR PNEUMATIC LEAK TEST."
18. All gas piping shall be given 100 percent radiographic examination in addition to the required pressure test.

3.03 INSTALLATION

A. General:

1. Installation shall include receiving, storing, uncrating, moving from storage, rigging, setting in place, aligning, welding, bolting, cleaning, and all other work necessary for complete installation of piping shown on the Contract Drawings.
2. Receipt, storage, handling, and maintenance of all piping shall be in accordance with the Contractor's standard procedures, and the Manufacturer’s recommended practices.
3. Protective devices and coatings applied by the pipe fabricator and the manufacturers of valves and piping specialties shall not be removed until each piping section, valve, and piping specialty is ready for installation.
4. Contractor shall exercise particular care to prevent the entry of loose welding metal, welding rods, debris, and other materials into piping during installation.
5. Contractor shall provide filler gaskets wherever flat faced flanges are mated to raise faced flanges at any piping or equipment connection that could be damaged by over-tightening.
6. Contractor shall furnish all required welding rods, backing rings, consumable inserts, welding gases and supplies, bolting materials and gaskets for joining all types of piping joints.
7. Types of joints shall be as specified on the Contract Drawings and applicable Piping Classification Sheets.
8. Contractor shall furnish flange insulation kits where indicated on the Contract Drawings and whenever joining pipes of dissimilar metals. Flange insulation kits shall be Type E or Type F as manufactured by Maloney Pipeline Products “or-equal”, Owner approved.

9. All fuel oil piping shall be installed in accordance with the requirements of ANSI B31.1 piping code, and the State of Louisiana Codes and Standards.
10. Pipe shall not be laid in water and shall be internally and externally dry during all assembly work.
11. All pipe lines shall be accurately set in place to meet all work points indicated on the Contract Drawings. All work shall be erected square, plumb, straight, true, and accurately fitted.
12. All piping for the fire protection system shall be designed and installed in accordance with NFPA 24.
13. All non-metallic piping shall be designed and installed in accordance with the Manufacturer's installation procedures.
14. Special care shall be taken to prevent contamination when de-watering, cutting into, and making connections with existing potable water lines. Trench water, mud, or other contaminating substances shall not be permitted to enter the lines. The interior of all pipes, fittings, and valves installed in such connections shall be thoroughly cleaned and then swabbed with, or dipped in, chlorine solution having a chlorine content of 200 milligrams per liter.
15. Cutting of pipe for closure pieces, installation of valves or fittings, or for any other reason shall be done without damage to the pipe so as to leave a smooth cut end at right angles to the axis of the pipe. All cutting of pipe shall be done by means of mechanical pipe cutters.
16. The interior of all pipe and fittings shall be thoroughly cleaned of all foreign matter before being installed and shall be kept clean until the work has been accepted. All lumps, blisters, and excess pipe coating shall be removed from exterior and interior surfaces and such surfaces shall be wire brushed (where applicable) and wiped clean and dry, free from oil and grease. All joint contact surfaces shall be clean when the joint is made. Joints shall be made in accordance with the requirements of the applicable codes and standards specified in applicable Piping Classification Sheets.
17. Coated piping shall be handled appropriately to prevent damage to the coating. Coatings shall be inspected after installation, before covering, and repaired where required. Coatings shall be completed at joints where required.
18. During installation, each pipe and fitting shall be inspected for defects. Cast iron pipe shall be rung with a light hammer to detect cracks. Any defective pipe or fitting shall be rejected and removed from the site of Work.

19. Valve boxes shall be set plumb. Each valve box shall be placed directly over the valve wrench nut it serves and set to pavement grade, ground surface, or other elevation as may be required. After being placed in proper position, earth shall be filled in the trench in loose layers not to exceed 6-inch un-compacted thickness and thoroughly compacted by tamping with mechanical tampers around the box for the full depth of the trench back-fill, and for a distance on each side of the box of not less than 4 feet at the top of the pipe and not less than 2 feet measured at the top of the trench prior to water settlement of adjacent trench back-fill.
20. Installation of valves and accessories shall be in accordance with the Contract Drawings and manufacturer's instructions and recommendations. Valves shall be checked for freedom of movement of moving parts prior to installation. Contractor shall lubricate valve operators.
21. All underground carbon steel piping shall be installed with a cathodic protection system. The cathodic protection system shall be per Section 48 50 90, Cathodic Protection.

B. Welding: Welding for all piping valves and piping specialties and repair welding of all weld defects shall be in accordance with the requirements of ANSI B31.1, AWWA, and Section 48 58 68, Welding of Power Plant Piping.

C. Hazard Tape:

1. Install hazard tape on top of all underground piping at the time of backfilling of trenches. Tape shall be located below finished grade.
2. Tape shall be triple-laminate consisting of aluminum foil, polyester film and polyethylene. Tape shall be 6-inch wide, furnished in 1,000-foot rolls and be HTDU series as manufactured by Panduit, Tinley Park, IL "or-equal", Engineer approved. Tape legends shall be black lettering on yellow background, two lines wide, letters 2-inch tall. Legend shall be "CAUTION CAUTION CAUTION / BURIED PIPE BELOW".
3. Non-metallic piping shall have a 12-gauge tracer wire installed on top of initial backfill above the piping prior to compacted backfill.

D. Trench Excavation:

1. Excavation shall be performed to the lines and grades indicated on the Contract Drawings. Trench excavation shall be in accordance AWWA Manual M9. Open cut excavation shall be utilized unless trenches cannot be maintained in a safe and stable condition; in which case, temporary sheeting, designed by Contractor, shall be used.
2. Backfill material shall be stockpiled at a sufficient distance from the sides of trenches to prevent overloading trench walls. Stability of trench excavation shall be the responsibility of Contractor.
3. Trenches for piping, unless otherwise indicated on the Contract Drawings, shall be a minimum of one foot wider than the outside

diameter of pipe, on each side, for a total width of the outside diameter plus 2 feet.

4. Width of the trench shall be such as to permit satisfactory joining of pipe and thorough tamping of bedding material under and around pipe.
5. After excavation to the elevations indicated on the Contract Drawings is completed, Contractor shall compact the trench subgrade to the density specified herein, and shall perform compaction testing.
6. Soft material, organic material, or otherwise unsuitable subgrade, not conforming to the requirements specified herein, shall be removed to a depth determined by Engineer, disposed as directed by Engineer, and replaced, to required grade, with structural fill material compacted to the same degree as the remainder of the trench bottom. Under no circumstances shall pipe be installed in water. Pipe shall not be installed when, in the opinion of the Engineer, the trench conditions or weather are unsuitable for such Work. Contractor shall be fully responsible for the dewatering and drainage of trenches during construction.
7. If trenches are to be excavated through existing roadways or other paved areas, Contractor shall remove all pavement within the limits indicated on the Contract Drawings. Requirements for road detouring shall be as indicated on the Contract Drawings. Contractor shall provide any road construction required to facilitate such detours, and flagmen to expedite traffic through those detours.
8. If trenches are to be excavated below, or adjacent to, existing underground utilities or structures, Contractor shall provide adequate protection to prevent damage of these utilities or structures. Existing utilities that will span the open trench after the excavation proceeds below the bottom of such utilities shall be securely supported by straps, hangers, or other devices.
9. All excavated material shall be transported to stockpile areas designated by Owner. Excess excavated material, and material not suitable for use as fill and backfill, shall be stockpiled in separate areas. All disposals shall be on-site at locations designated by Owner.

E. Trench Backfilling:

1. Bedding material, for piping to be supported on subgrade, shall provide a firm and stable foundation, of uniform density, throughout the entire length of pipe. Material shall be size No. 57, determined in accordance with ASTM D422.
2. Rock, hard pan, or other unyielding material encountered in the pipe trench shall be removed for a depth of not less than six inches below the bottom of pipe trench and a width of not less than six inches on each side of the external diameter of the pipe, and replaced with bedding material.
3. Bedding material shall be of the thickness indicated on the Contract Drawings. Compaction shall be in accordance with the requirements

specified herein. Material shall be accurately shaped for the pipe to be bedded in it.

4. After installation of pipe and inspection and approval by Engineer, trench shall be backfilled to the springline of the pipe with ASTM D448 size No. 57 stone, and then to one foot above the crown of the pipe, with clean well graded sand.
5. Backfill up to the springline of the pipe shall be placed in layers of not more than six inches loose thickness, and shall be brought up evenly on both sides of the pipe. Each layer of backfill shall be compacted to the density for structural fill specified herein.
6. Above the springline, up to one foot above the crown of the pipe, backfill shall be placed as specified herein evenly on both sides of the pipe, and compacted to the density specified for structural fill specified herein.
7. Backfill for the remainder of the trench shall be compacted as specified for the surrounding area. Controlled fill and backfill shall be used as general site fill; structural fill and backfill shall be used under all permanent construction (including roadways), in embankments, and within 5 feet of building walls.
8. Where trenches have been excavated through roadways, Contractor shall restore road subgrade and surface equal to the original condition. Gradation and compaction of subgrade backfill shall be as indicated on the Contract Drawings.
9. Bedding and backfilling for non-metallic piping shall be in accordance with the Manufacturer's installation procedures.

F. Compaction Procedures:

1. Method of compaction and type of equipment to be used shall be selected, by Contractor, to suit the accessibility of the area, the required degree of compaction, and the character and moisture content of the soil.
2. Loose thickness of each layer of fill shall not be more than 9 inches; except, if hand-operated power tampers are used, layers shall have a loose thickness of not more than 6 inches. Static weight of hand-operated power tampers shall not be less than 100 pounds. Contractor may increase layer thickness if a testing program indicates that a thicker layer can be used and the specified compaction achieved. Contractor shall submit applicable test results. Contractor shall in no case use a layer thickness greater than 12 inches. Loose thicknesses shall be checked by Contractor during compaction operations. Each layer shall be uniformly spread, wetted, or dried near optimum moisture content for the required degree of compaction, as specified herein, and uniformly compacted by suitable compaction equipment.
3. If fill has not been sufficiently compacted, as determined by field density tests, compaction effort shall be continued and moisture content shall be adjusted to optimum, if necessary, until the specified

compaction is obtained. If the density requirements cannot be complied with, the material shall be removed and disposed of at Contractor's expense.

4. At the end of each work day, the surface of the compacted fill shall be smooth graded and sloped to assure rain runoff and prevent formation of water pockets.
5. Sections of embankments or subgrade that have been damaged by Contractor's equipment shall be repaired and recompacted, by Contractor, in accordance with the requirements of this section of the Specification.

G. Compaction Requirements:

1. Fill and backfill materials consisting of cohesive soils, and cohesionless soils containing more than five percent fines (material passing No. 200 sieve in accordance with ASTM D1140), shall be compacted to not less than the density specified hereinafter, as a percent of maximum dry density determined in accordance with ASTM D1557.
2. Fill and backfill materials consisting of cohesionless soils containing five percent, or less, fines shall be compacted to not less than the density specified hereinafter, as a percent of the maximum index density as determined in accordance with ASTM D4253.
3. Controlled fill and backfill shall be compacted to 90 percent of maximum dry density.
4. Structural fill and backfill shall be compacted to 95 percent of maximum dry density.
5. Trench subgrades shall be compacted to 95 percent of maximum dry density.

H. Moisture Content: Material for filling or backfilling shall have a natural moisture content, as determined in accordance with ASTM D2216, approaching the optimum moisture content for compaction. Contractor shall add water uniformly, by means of a distributor, to fill material deficient in moisture content for proper compaction. If the fill material is too wet, it shall be scarified or disked and aerated until the proper moisture content is attained. With the approval of Engineer, drier soil may be blended with overly moist soil to achieve a moisture content suitable for compaction.

I. Tolerances: The surfaces of excavated, filled, or backfilled areas for structures and other installations, as indicated on the Contract Drawings, shall not vary by more than 0.10 foot from required grade and cross section.

J. Pipe Coating and Wrapping:

1. All underground carbon steel piping shall be shop coated with a 100 percent solid, thermosetting, fusion-bonded, dry powder epoxy coating.

2. All surface irregularities, welds and weld spatter shall be ground smooth to a 1/8-inch radius. All surfaces shall be blasted to near-white metal in accordance with Steel Structures Painting Council Surface Preparation Specification SSPC-SP10 or NACE No. 2 near-white finish.
3. Apply coating by the fluidized bed process to a thickness of not less than 30 mils. The parts shall be heated and cured in accordance with the manufacturer's specifications.
4. The coating shall be pinhole-free and tested with a low voltage, wet sponge holiday detector. All pinholes shall be marked, repaired and retested to insure a pinhole-free coating.
5. For piping subject to operating temperatures below 150 degrees F per Pipe Line List, use Polyken Line Travel Coating System "or-equal". For higher temperatures up to 250 degrees F, use Polyken GO Coat 250 System "or-equal".
6. All Underground Ductile Iron Piping shall be wrapped with 8 mil Polyethylene in a loose tube.
7. All Underground Ductile Iron Fittings shall be wrapped with 8 mil Polyethylene flat sheets.

K. Field Welding of Epoxy Coated Pipes: The shop applied coating cutback of epoxy coated pipe is normally adequate to prevent any welding difficulties. Drape an 18-inch strip of fire retardant mating or cloth over the top and each side of the weld to prevent spatter burning through the coating. Precautions shall be taken to ensure ventilation is adequate during welding.

L. Field Cutting: When field cutting, the epoxy coating shall carbonize or char about 2-3 inches back from cut. Emissions from the coating are no more toxic than those given off during the welding procedure, however, precautions shall be taken to ventilate the area, especially during tie-ins where there is very little air movement at the bottom of the trench. Epoxy has a "sweet" smell when it chars, which may be objectionable to some welders.

M. Joint Epoxy Coating:

1. Epoxy coating can be applied to the weld area in the field using the process of black clearing, induction heating and powder coating. Field welds can also be protected with all commercially available joint coatings – tapes, mastic, shrink sleeves and liquid epoxy coatings. Consult the manufacturer or its coating applicator for more information about coating field welds.
2. The joint area shall be cleaned in accordance with the joint material manufacturer's recommendations. Care shall be taken to remove all charred or carbonized resin from the joint area. Since factory applied epoxy is hard and smooth, it shall be lightly abraded about 2 inches - 3 inches on either side of the weld to provide a good bonding surface for the joint coating material.

N. Field Repairs: All areas of damage in the epoxy coating shall be repaired. Before application of the repair material, remove oil, grease, oxidation or other contaminates using a suitable solvent. The coating in the immediate damage area shall also be roughened or lightly abraded to maximize adhesion of the patch.

O. Field Painting:

1. The final finish painting is not covered in the scope of PWC-2.
2. All underground galvanized carbon steel and stainless steel piping shall be coated and wrapped per Appendix IV - B31.1 Piping Code or AWWA C209.
    a. After wrapping operations have been completed, the contractor shall conduct an electrical inspection of all wrapped surfaces with an electrical holiday detector as set forth in Section 6 of AWWA 203.
    b. The exterior surfaces at the pipe joints shall be the same materials as used for the shop lining and coating of the pipe.
3. Exterior surfaces of fuel gas pipe to be installed underground shall be provided with a shop applied fusion bonded epoxy coatings as per AWWA C213-07 and NACE SP0394. While selecting the coating, due consideration shall be given for operating temperatures of the pipeline, pipe handling, moisture adsorption, nature of the soil in contact, adhesion characteristics and dielectric strength. Coatings shall be applied in a manner that ensures no voids, wrinkles, holidays and gas entrapment.
4. No coating shall be applied within 4 inches of field weld connections. Fusion bonded epoxy may be field applied on external field joints using induction heat. Alternative joint coatings using hot applied tape, cold applied tape, liquid epoxy, or heat shrinkable coatings in accordance with AWWA C203, AWWA C209, AWWA C210, AWWA C216, AWWA C217 may be agreed by the Owner.

P. Flushing and Cleaning:

1. Fuel oil delivered to the existing day tank shall meet the requirements within the Solar ES9-98 Fuel Specification. Reference Volume 4 Reference Material for this document..
2. The Contractor shall meet with the Owner prior to start of cleaning/flushing to review procedures and also circulation routing through the piping. System-specific chemical/cleaning agent requirements shall be confirmed (where applicable) prior to flushing and cleaning.
3. Diesel fuel piping cleaning and flushing shall be performed in accordance with the turbine manufacturer’s recommended procedures and requirements to remove construction debris and contaminants prior

to commissioning or preservation. Contractor shall provide all the necessary equipment, consumables, and personnel for this procedure.

a. Diesel flush medium shall be clean and free of water or contaminants, and fuel quality shall be suitable for system flushing.
b. Flushing shall be performed using temporary pumps and hoses and remove all sensitive components from the system prior to flushing.
c. Flow rates through the piping system shall be 2 to 3 times the normal flow rate of the system. Flow rates shall be set at the highest practical level achievable to promote effective removal of contaminants. Piping shall be flushed in manageable sections to ensure adequate circulation.
d. Strainers and filters shall be monitored and inspected periodically during the flushing procedure.
e. Flushing shall be considered complete when all the following is satisfied.
    1) No visible construction debris, scale, rust, weld slag, or foreign material is observed in flush filters, strainers, or drained fluid. A 10-micron bag filter element shall be used on the outlet of the flushed component as the screening point. Acceptance criteria shall be no visible particles in the 10-micron bag.
    2) Filters and strainers show no evidence of ongoing debris generation.
    3) Differential pressure across flush filtration remains stable during circulation.
    4) Flush fluid is visually clear and free of free water.
    5) The Owner's representative confirms that the system is clean and ready for service.
f. Remove all temporary flushing equipment and restore permanent piping components.
g. Submit a detailed flushing procedure for review and approval prior to commencing any flushing activities. The submittal shall include, at a minimum, proposed equipment, flushing medium specifications, flow rates, filtration setup, acceptance criteria, and a step-by-step execution plan.
h. Utilize diesel fuel that is compliant with the turbine manufacturer's requirements for flushing. Verification of fuel quality shall be provided through testing, including submission of fuel type, samples and test results both prior to flushing and upon completion, in accordance with turbine manufacturer's requirements.
i. Coordinate required inspection and witness hold points during the flushing process. Final acceptance of flushing operation shall include formal witness and sign-off by the Owner's representative confirming the system meets specified cleaniless criteria.

j. Provide a comprehensive report detailing flushing procedures, dates, durations, flow rates, inspection reports, and final acceptance.

3.04 SUPPLEMENTS

A. Schedule For Submission of Drawings and Data:

	Document	**Schedule**	**Action**
With Bid			
	Not Applicable		
After Award of Contract			
	Shop Fabricated Drawings	20 DAAC	R
	Erection/Installation Drawings	30 DAAC	R
	Quality Assurance Plan	35 DAAC	R
	On-site Storage Procedures	35 DAAC	R
	Material Certificates of Compliance	10 DPRF	I
	Testing Procedures	21 DPT	R
	Test Results	14 DATC	I
	LEGEND R – Submit for review DAAC - Days after Award of Contract DPRF - Days prior to release for fabrication DPS - Days prior to shipment DPT - Days prior to test DATC - Days after test completion I – Submit for Information UCW - Upon completion of work		

A. Form Mt-1 – Hydrostatic Or Pneumatic Leak Test:

MT-1
HYDROSTATIC OR PNEUMATIC LEAK TEST

W.O.NO. _____ TEST PACKAGE NO._____

STATION _____ SHEET NO._____

SYSTEM NO._____ CONTRACT NO. _____

SYSTEM _____ CONTRACTOR _____

REFERENCE DATA

LINE SPEC. _____ TEST PRESS._____ PSIG DESIGN PRESS._____PSIG

TEST FLUID _____ TEST TEMP._____ □F CODE _____

TEST BOUNDARY DESCRIPTION - ATTACH FLOW DIAG. OR DWG. MARKED TO SHOW BOUNDARY INCLUDING TEMP. CLOSURES, VENTS USED, DRAIN, TEST PUMP CONNECTION, FOR COMPLETE SYSTEMS OR INDIVIDUAL EQUIP. OR PRESSURIZED TANKS, DESCRIBE BELOW:

_____

_____

SPECIAL TEST CONDITIONS (IF APPLICABLE):_____

_____

_____

LEAK DETECTION METHOD_____

TEST PROCEDURE NO./NAME (IF APPLICABLE)_____

****

TEST DATA

ACTUAL PRESS. _____ PSIG PRESS. DROP _____ PSI TIME AT PRESS._____

ACTUAL FLUID TEMP. _____ □F
METAL TEMP.(IF APPLICABLE) MIN._____ □F MAX._□F

VISUAL INSPECTION NOTES & REMARKS - INCLUDE LOCATION & DESCRIPTION OF LEAKS REQUIRING CORRECTION OR OTHER CONDITIONS OBSERVED.

_____

_____

DATE STARTED _____ DATE COMPLETED_____

PERFORMED BY _____ WITNESSED BY _____

****

SUBMITTED (Contractor Engineer): RECEIVED (Construction Manager Representative):

_____ ____ _____ ____
(Signature) (Date) (Signature) (Date)

C. Pipe and Valve Material Specification:

					POWER ENGINEERS	MATERIAL SPECIFICATION	YHD	REV
						PIPE		0
0	09.14.22	STH	JRC	STH	ENGINEERING STANDARD	CARBON STEEL: ASTM A106B, CL 150, SCH STD/80, BW & SW, WITH CS SCH STD/80, DOUBLE CONTAINMENT		0.02
REV	DATE	DSGN	CHK	APPD			SHEET 1 OF 15	

CARRIER									
DESIGN PRESS. (PSIG)	-14.7 to 285	273	260	245	230				
DESIGN TEMP. (°F)	-20 to 100	150	200	250	300				
DESIGN PRESS. (BARG)	-1.0 to 19.7	18.8	17.7	16.9	15.8				
DESIGN TEMP. (°C)	-29 to 38	65	100	121	149				

DESIGN CODE(S)	ASME B31.1 - NON-BOILER EXTERNAL PIPING (2020) ASME B31.3 - NORMAL FLUID SERVICE PIPING (2020)	
SIZE RANGE	NPS 1/2 (DN 15) thru NPS 2 (DN 50)	NPS 2 1/2 (DN 65) thru NPS 12 (DN 300)
PRIMARY JOINT TYPE	Socket weld	Butt weld
PIPE	ASTM A106 Gr. B, ASME B36.10M Sch. 80 PE	ASTM A106 Gr. B, ASME B36.10M Std wt. BE
FITTINGS		
Couplings, Tees, Ells, Reducers, etc.	ASTM A105, ASME B16.11 Class 3000 SW	ASTM A234 Gr. WPB, ASME B16.9 Std wt. BE
Laterals, Wyes	N/A	ASTM A105, Special fittings, see Additional Requirements
Reducing Inserts	ASTM A105, MSS SP-79 Class 3000 SW	N/A
Unions	ASTM A105, MSS-SP-83 Class 3000 SW	N/A
Adapters	ASTM A105, MSS SP-79 Class 3000 SW	N/A
FLANGES	ASTM A105, ASME B16.5 Class 150 RF x SW	ASTM A105, ASME B16.5 Class 150 RF, Std bore, WN or Slip-on
BRANCH CONNECTIONS		
Reducing Tees	ASTM A105, ASME B16.11 Class 3000 SW	ASTM A234 Gr. WPB, ASME B16.9 Std wt
Sockolets	ASTM A105, MSS SP-97 Class 3000 SW	ASTM A105, MSS SP-97 Class 3000 SW
Weldolets	N/A	ASTM A105, MSS SP-97 Std wt.
BOLTING	ASTM A193 Gr. B7 continuous thread stud bolts ASTM A194 Gr. 2H Heavy Hex nuts.	
GASKETS	ASME B16.20, Class 150, Spiral Wound, 0.175 in (4.45 mm) thick 304SS metallic winding, 0.125 in (3.18 mm) thick centering ring, with Thermiculite 835 filler, Flexitallic Style CGI "Compression-Gauge" with inner ring.	

ADDITIONAL REQUIREMENTS - CARRIER PIPE

1. Outlet sizes NPS 1/2 (DN 15) thru NPS 2 (DN 50): Sockolets for 50% or greater reduction in branch to header pipe size.
2. Outlet sizes NPS 2 1/2 (DN 65) and greater: Weldolets for 50% or greater reduction in branch to header pipe size.
3. Use flat face flanges for connection to ductile iron, brass, non-metallic, or other flat face flanges.
4. Interface aboveground and buried piping with flange insulating kits (gasket).
5. Special fittings - shall meet ASME B31.1 wall thickness requirements to match pipe design pressure and temperature with 0.063 in (1.59 mm) corrosion allowance. Fittings to be furnished with ASME B16.25 butt-welding end preparations and bore to match pipe ID. Order by material, run size/wall by branch size/wall.
6. Weldolets - Integrally Reinforced Branch Connection shall meet ASME B31.1 wall thickness area replacement or burst test requirements and provide 100% pipe strength. Fittings to be furnished with ASME B16.25 butt-welding end preparations and bore to match branch pipe ID. Bonney Forge "Heavy Wall Forged WELDOLET". Order by "run material size/wall by branch size/wall".

THIS DOCUMENT WAS PREPARED BY POWER ENGINEERS, INC. FOR SPECIFIC PROJECTS, AND UNIQUE REQUIREMENTS OF THE PROJECTS. REUSE OF THIS DOCUMENT OR ANY INFORMATION CONTAINED IN THIS DOCUMENT FOR ANY PURPOSE IS PROHIBITED UNLESS WRITTEN PERMISSION FROM BOTH POWER AND POWER'S CLIENT IS GRANTED.

					POWER ENGINEERS	MATERIAL SPECIFICATION	YHD	REV
						PIPE		0
0	09.14.22	STH	JRC	STH	ENGINEERING STANDARD	CARBON STEEL: ASTM A106B, CL 150, SCH STD/80, BW & SW, WITH CS SCH STD/80, DOUBLE CONTAINMENT		0.02
REV	DATE	DSGN	CHK	APPD			SHEET 2 OF 15	

NOTES - CARRIER PIPE

1. Pressure and temperature limitations are controlled by carrier/containment pipe ratings and external pressure on carrier pipe (ASME B16.5 flange ratings and ASME VIIID1 UG-28).
2. This material specification is approved for use below the creep range as identified by ASME B31.1.
3. For intermediate pressure-temperature ratings, linear interpolation is NOT permitted. Complete code required Minimum Wall Thickness calculation and flange rating evaluation.
4. Pipe wall thickness based on 0.063 in (1.59 mm) corrosion, erosion or mechanical allowance.
5. Bolting/gasket selection based on ASME B16.5 requirements for bolt strength and spiral wound gaskets use.
6. The pressure of the fluid in the carrier pipe shall not exceed the maximum temperature and pressure rating of the containment piping.

CONTAINMENT (CASING)									
DESIGN PRESS. (PSIG)	-14.7 to 285	273	260	245	230				
DESIGN TEMP. (°F)	-20 to 100	150	200	250	300				
DESIGN PRESS. (BARG)	-1.0 to 19.7	18.8	17.7	16.9	15.8				
DESIGN TEMP. (°C)	-29 to 38	65	100	121	149				

DESIGN CODE(S)	ASME B31.1 - NON-BOILER EXTERNAL PIPING (2020) ASME B31.3 - NORMAL FLUID SERVICE PIPING (2020)	
SIZE RANGE	NPS 1/2 (DN 15) thru NPS 2 (DN 50)	NPS 2 (DN 50) thru NPS 24 (DN 600)
PRIMARY JOINT TYPE	Socket weld	Butt weld
PIPE	ASTM A106 Gr. B, ASME B36.10M Sch. 80 PE	ASTM A106 Gr. B, ASME B36.10M Std wt. BE
FITTINGS		
Couplings, Tees, Ells, Reducers, etc.	ASTM A105, ASME B16.11 Class 3000 SW	ASTM A234 Gr. WPB, ASME B16.9 Std wt. BE
Laterals, Wyes	N/A	ASTM A106 Gr. B, A105, Special fittings, see Additional Requirements
Miter bends, Fabricated Fittings	N/A	ASTM A106 Gr. B, A105, Special fittings, see Additional Requirements
Reducing Inserts	ASTM A105, MSS SP-79 Class 3000 SW	N/A
Unions	ASTM A105, MSS-SP-83 Class 3000 SW	N/A
Adapters	ASTM A105, MSS SP-79 Class 3000 SW	N/A
FLANGES	ASTM A105, ASME B16.5 Class 150 RF x SW	ASTM A105, ASME B16.5 Class 150 RF, Std bore, WN or Slip-on
BRANCH CONNECTIONS		
Reducing Tees	ASTM A105, ASME B16.11 Class 3000 SW	ASTM A234 Gr. WPB, ASME B16.9 Std wt
Sockolets	ASTM A105, MSS SP-97 Class 3000 SW	ASTM A105, MSS SP-97 Class 3000 SW
Weldolets	N/A	ASTM A105, MSS SP-97 Std wt.
BOLTING	ASTM A193 Gr. B7 continuous thread stud bolts ASTM A194 Gr. 2H Heavy Hex nuts.	
GASKETS	ASME B16.20, Class 150, Spiral Wound, 0.175 in (4.45 mm) thick 304SS metallic winding, 0.125 in (3.18 mm) thick centering ring, with Thermiculite 835 filler, Flexitallic Style CGI "Compression-Gauge" with inner ring.	

THIS DOCUMENT WAS PREPARED BY POWER ENGINEERS, INC. FOR SPECIFIC PROJECTS, AND UNIQUE REQUIREMENTS OF THE PROJECTS. REUSE OF THIS DOCUMENT OR ANY INFORMATION CONTAINED IN THIS DOCUMENT FOR ANY PURPOSE IS PROHIBITED UNLESS WRITTEN PERMISSION FROM BOTH POWER AND POWER'S CLIENT IS GRANTED.

					POWER ENGINEERS	MATERIAL SPECIFICATION	YHD	REV
						PIPE		
0	09.14.22	STH	JRC	STH	ENGINEERING STANDARD	CARBON STEEL: ASTM A106B, CL 150, SCH STD/80, BW & SW, WITH CS SCH STD/80, DOUBLE CONTAINMENT		0 0.02
REV	DATE	DSGN	CHK	APPD			SHEET 3 OF 15	

ADDITIONAL REQUIREMENTS - CONTAINMENT (CASING) PIPE

1. Outlet sizes NPS 1/2 (DN 15) thru NPS 2 (DN 50): Sockolets for 50% or greater reduction in branch to header pipe size.
2. Outlet sizes NPS 2 1/2 (DN 65) and greater: Weldolets for 50% or greater reduction in branch to header pipe size.
3. Special fittings - shall meet ASME B31.1 requirements for Specially Designed Components with wall thickness requirements to match pipe design pressure and temperature with 0.063 in (1.59 mm) corrosion allowance. Fittings to be furnished with ASME B16.25 butt-welding end preparations and bore to match pipe ID. Order by material, run size/wall by branch size/wall along with Specially Designed Component requirements.
4. Weldolets - Integrally Reinforced Branch Connection shall meet ASME B31.1 wall thickness area replacement or burst test requirements and provide 100% pipe strength. Fittings to be furnished with ASME B16.25 butt-welding end preparations and bore to match branch pipe ID. Bonney Forge "Heavy Wall Forged WELDOLET". Order by "run material size/wall by branch size/wall". Interface aboveground and buried piping with flange insulating kits (gasket).
5. Use flat face flanges for connection to ductile iron, brass, non-metallic, or other flat face flanges.
6. Interface aboveground and buried piping with flange insulating kits (gasket).
7. Containment Pipe shall be designed to allow continuous drainage in the annular space to the drain points. Drain fittings shall be designed to allow a valve attachment to be made so that the secondary containment compartment may be readily drained and manually checked for leaks.
8. Containment pipe design pressure and temperature to match Carrier pipe.
9. Containment pipe shall be designed to allow for maximum piping differential expansion/contraction of carrier/containment pipes.
10. System consists of a carrier pipe, a containment pipe coated with urethane or a fiberglass-reinforced polymer (FRP) outer jacket, and a cable leak detection system.
11. Hydrotest interstitial space between Carrier and Containment. Integrity required on both internal and external pressure tests. Interstitial space to be dried with air/alcohol following hydrotest.

NOTES - CONTAINMENT (CASING) PIPE

1. Pressure and temperature limitations are controlled by containment pipe rating and external pressure on carrier pipe (ASME B16.5 flange ratings and ASME VIIID1 UG-28). Coated piping service temperature limited to 200ºF (93°C), containment spacers limited to 280ºF(138ºC).
2. This material specification is approved for use below the creep range as identified by ASME B31.1.
3. Pipe wall thickness based on 0.063 in (1.59 mm) corrosion, erosion or mechanical allowance.
4. Bolting/gasket selection based on ASME B16.5 requirements for bolt strength and spiral wound gaskets use.
5. The pressure of the fluid in the carrier pipe shall not exceed the maximum temperature and pressure rating of the containment piping.

SYSTEM NOTES

1. Refer to details 1 through 12 for further piping requirements. Details are preliminary and require finalization during detailed system design.
2. Piping shall be prefabricated as complete as possible in sections within a shop environment.
3. Interstitial support devices used to center and support the carrier piping within the containment piping shall be manufactured from Polypropylene (or approved equivalent).
4. Interstitial support devices shall be sized to fit snugly yet allow the carrier piping to be inserted into its containment (or conversely, allow the containment pipe to be slipped over its associated carrier pipe) these interstitial supports shall be affixed to adequately support the carrier piping along its length.
5. The system design shall include provisions for maximum differential thermal expansion growth between carrier and containment pipe including anchors, guides and expansion loops as required.
6. Interstitial supporting devices shall be high temperature (280ºF(138ºC)) PSI Model PE Non-metallic Casing Spacers placed a maximum of five (5) feet (1524 mm) apart.
7. Seal welds or end seals suitable for interstitial pressure and thermal loads shall be used where a containment pipe section is being terminated, but where the primary pipe continues.
8. Provide and install, as required, a sensor station consisting of a sensor, drip leg and drain valve with hose connection and/or riser with sensor extension handle.
9. Containment pipe will be furnished with knot-free twine to allow for insertion of a coated steel pull cable for leak detection cable installation.

THIS DOCUMENT WAS PREPARED BY POWER ENGINEERS, INC. FOR SPECIFIC PROJECTS, AND UNIQUE REQUIREMENTS OF THE PROJECTS. REUSE OF THIS DOCUMENT OR ANY INFORMATION CONTAINED IN THIS DOCUMENT FOR ANY PURPOSE IS PROHIBITED UNLESS WRITTEN PERMISSION FROM BOTH POWER AND POWER'S CLIENT IS GRANTED.

					POWER ENGINEERS	MATERIAL SPECIFICATION	YHD	REV
						PIPE		0
0	09.14.22	STH	JRC	STH	ENGINEERING STANDARD	CARBON STEEL: ASTM A106B, CL 150, SCH STD/80, BW & SW, WITH CS SCH STD/80, DOUBLE CONTAINMENT		0.02
REV	DATE	DSGN	CHK	APPD			SHEET 4 OF 15	

PIPE SEGMENT

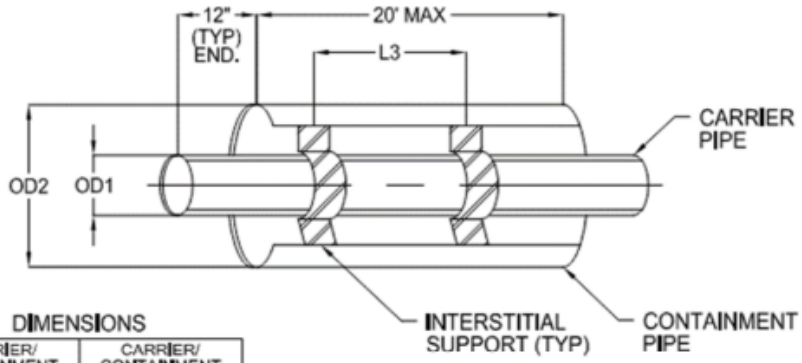

DIMENSIONS

CARRIER/ CONTAINMENT	CARRIER/ CONTAINMENT
¾" X 2"	6" X 8"
1" X 3"	6" X 10"
1¼" X 3"	6" X 10S**
1½" X 3"	8" X 10"
2" X 4"	8" X 12"
2½" X 6"	8" X 12S**
3" X 6"	10" X 14"
4" X 6"	10" X 16"
4" X 8"	12" X 16"



2-PIECE
FOR 3/4" TO 12" (1.9 TO 30.48cm).

INTERSTITIAL SUPPORT DETAIL

GENERAL NOTES:

CARRIER - ALL ENDS ARE BEVELED FOR WELD.
CONTAINMENT - ALL ENDS ARE BEVELED FOR WELD.
PIPE SHALL BE SHIPPED BUNDLED WITH ENDS REINFORCED AND WRAPPED TO PREVENT DAMAGE.
ALL MODEL PE ISOLATOR/SPACERS SHOULD NOT EXCEED 5 FEET (1.5 METERS) TO 8 FEET (2.4 METERS) CENTER-TO-CENTER (L3). AN ISOLATOR/SPACER SHOULD BE PLACED WITHIN 2 FEET (0.6 METERS) ON EACH SIDE OF A COUPLING JOINT AND WITHIN 1 FOOT (0.3 METERS) OF EACH END OF CASING.

DETAIL 1
SCALE: NTS

THIS DOCUMENT WAS PREPARED BY POWER ENGINEERS, INC. FOR SPECIFIC PROJECTS, AND UNIQUE REQUIREMENTS OF THE PROJECTS. REUSE OF THIS DOCUMENT OR ANY INFORMATION CONTAINED IN THIS DOCUMENT FOR ANY PURPOSE IS PROHIBITED UNLESS WRITTEN PERMISSION FROM BOTH POWER AND POWER'S CLIENT IS GRANTED.

					POWER ENGINEERS	MATERIAL SPECIFICATION	YHD	REV
						PIPE		0
0	09.14.22	STH	JRC	STH	ENGINEERING STANDARD	CARBON STEEL: ASTM A106B, CL 150, SCH STD/80, BW & SW, WITH CS SCH STD/80, DOUBLE CONTAINMENT		0.02
REV	DATE	DSGN	CHK	APPD			SHEET 5 OF 15	

ELBOW 90 DEGREE

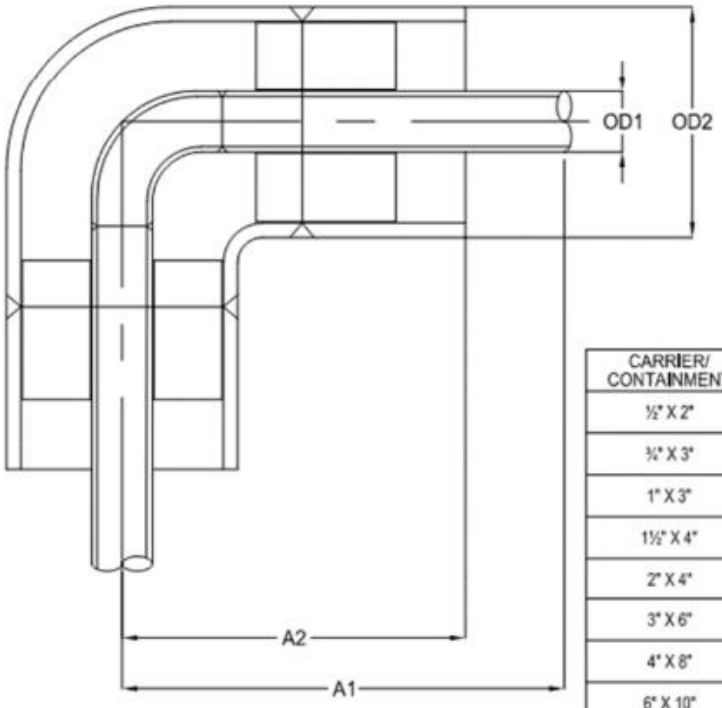

DIMENSIONS

CARRIER/ CONTAINMENT	A1	A2	OD1	OD2
½" X 2"	5.25"	4.25"	0.84	2.38
¾" X 3"	6.60"	5.60"	1.05	3.50
1" X 3"	6.60"	5.60"	1.32	3.50
1½" X 4"	8.00"	7.00"	1.90	4.50
2" X 4"	8.00"	7.00"	2.38	4.50
3" X 6"	10.50"	9.50"	3.50	6.63
4" X 8"	15.00"	14.00"	4.50	8.63
6" X 10"	18.00"	17.00"	6.63	10.75
8" X 12"	21.70"	20.70"	8.63	12.75

GENERAL NOTES:

CARRIER - ½" X 2" THROUGH 4" X 8" USE LONG RADIUS 90 DEGREE WELD ELBOW.
6" X 10" THROUGH 8" X 10" USE SHORT RADIUS 90 DEGREE WELD ELBOW.
ALL ENDS ARE BEVELED FOR WELD.

CONTAINMENT - ½" X 2" THROUGH 8" X 12" USE 90 DEGREE ELBOW.
ALL ENDS ARE PLAIN END.

ALL FITTINGS SHALL BE FACTORY TESTED.

ALL DIMENSIONS ARE IN INCHES UNLESS OTHERWISE INDICATED.

DETAIL 2
SCALE: NTS

THIS DOCUMENT WAS PREPARED BY POWER ENGINEERS, INC. FOR SPECIFIC PROJECTS, AND UNIQUE REQUIREMENTS OF THE PROJECTS. REUSE OF THIS DOCUMENT OR ANY INFORMATION CONTAINED IN THIS DOCUMENT FOR ANY PURPOSE IS PROHIBITED UNLESS WRITTEN PERMISSION FROM BOTH POWER AND POWER'S CLIENT IS GRANTED.

					POWER ENGINEERS	MATERIAL SPECIFICATION	YHD	REV
						PIPE		0
					ENGINEERING STANDARD	CARBON STEEL: ASTM A106B, CL 150, SCH STD/80, BW & SW, WITH CS SCH STD/80, DOUBLE CONTAINMENT		0.02
0	09.14.22	STH	JRC	STH			SHEET 6 OF 15	
REV	DATE	DSGN	CHK	APPD				

ELBOW 45 DEGREE

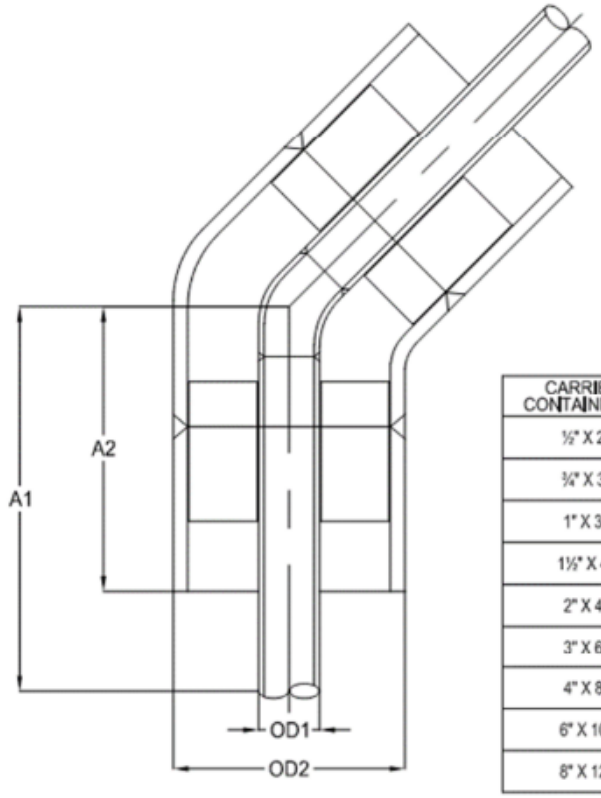

DIMENSIONS

CARRIER/ CONTAINMENT	A1	A2	OD1	OD2
½" X 2"	4.60"	3.60"	0.84	2.38
¾" X 3"	5.50"	4.50"	1.05	3.50
1" X 3"	5.50"	4.50"	1.32	3.50
1½" X 4"	6.50"	5.50"	1.90	4.50
2" X 4"	6.50"	5.50"	2.38	4.50
3" X 6"	8.75"	7.75"	3.50	6.63
4" X 8"	11.00"	10.00"	4.50	8.63
6" X 10"	15.00"	14.00"	6.63	10.75
8" X 12"	18.94"	17.94"	8.63	12.75

GENERAL NOTES:

CARRIER - ½" X 2" THROUGH 8" X 12" USE 45 DEGREE WELD ELBOW.
ALL ENDS ARE BEVELED FOR WELD.

CONTAINMENT - ½" X 2" THROUGH 8" X 12" USE 45 DEGREE ELBOW.
ALL ENDS ARE PLAIN END.

ALL FITTINGS SHALL BE FACTORY TESTED.

ALL DIMENSIONS ARE IN INCHES UNLESS OTHERWISE INDICATED.

DETAIL 3
SCALE: NTS

THIS DOCUMENT WAS PREPARED BY POWER ENGINEERS, INC. FOR SPECIFIC PROJECTS, AND UNIQUE REQUIREMENTS OF THE PROJECTS. REUSE OF THIS DOCUMENT OR ANY INFORMATION CONTAINED IN THIS DOCUMENT FOR ANY PURPOSE IS PROHIBITED UNLESS WRITTEN PERMISSION FROM BOTH POWER AND POWER'S CLIENT IS GRANTED.

					POWER ENGINEERS	MATERIAL SPECIFICATION	YHD	REV 0 0.02
						PIPE		
0	09.14.22	STH	JRC	STH	ENGINEERING STANDARD	CARBON STEEL: ASTM A106B, CL 150, SCH STD/80, BW & SW, WITH CS SCH STD/80, DOUBLE CONTAINMENT	SHEET 7 OF 15	
REV	DATE	DSGN	CHK	APPD				

TEE

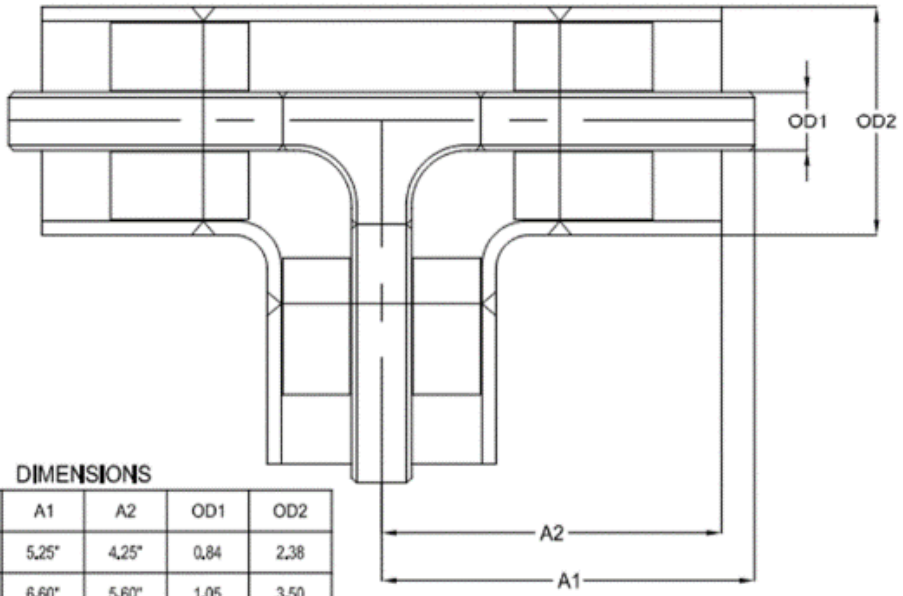

DIMENSIONS

CARRIER/ CONTAINMENT	A1	A2	OD1	OD2
½" X 2"	5.25"	4.25"	0.84	2.38
¾" X 3"	6.60"	5.60"	1.05	3.50
1" X 3"	6.60"	5.60"	1.32	3.50
1½" X 4"	8.10"	7.10"	1.90	4.50
2" X 4"	8.10"	7.10"	2.38	4.50
3" X 6"	10.50"	9.50"	3.50	6.63
4" X 8"	14.50"	13.50"	4.50	8.63
6" X 10"	17.90"	16.90"	6.63	10.75
8" X 12"	21.70"	20.70"	8.63	12.75

GENERAL NOTES:

ALL FITTINGS SHALL BE FACTORY TESTED.

ALL DIMENSIONS ARE IN INCHES UNLESS OTHERWISE INDICATED.

DETAIL 4 -

SCALE: NTS

THIS DOCUMENT WAS PREPARED BY POWER ENGINEERS, INC. FOR SPECIFIC PROJECTS, AND UNIQUE REQUIREMENTS OF THE PROJECTS. REUSE OF THIS DOCUMENT OR ANY INFORMATION CONTAINED IN THIS DOCUMENT FOR ANY PURPOSE IS PROHIBITED UNLESS WRITTEN PERMISSION FROM BOTH POWER AND POWER'S CLIENT IS GRANTED.

					POWER ENGINEERS	MATERIAL SPECIFICATION	YHD	REV
						PIPE		0
					ENGINEERING STANDARD	CARBON STEEL: ASTM A106B, CL 150, SCH STD/80, BW & SW, WITH CS SCH STD/80, DOUBLE CONTAINMENT		0.02
0	09.14.22	STH	JRC	STH			SHEET 8 OF 15	
REV	DATE	DSGN	CHK	APPD				

TERMINATION

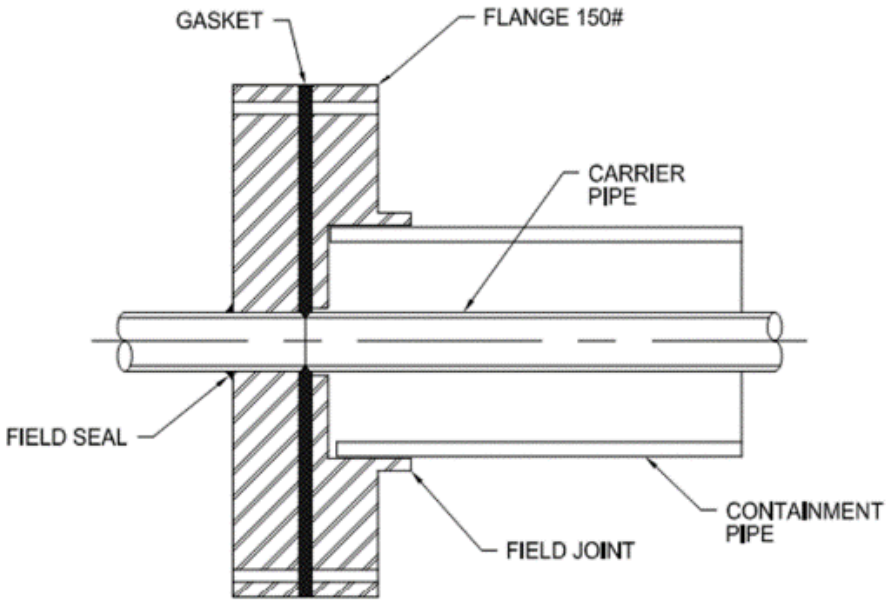

DETAIL 5
SCALE: NTS -

THIS DOCUMENT WAS PREPARED BY POWER ENGINEERS, INC. FOR SPECIFIC PROJECTS, AND UNIQUE REQUIREMENTS OF THE PROJECTS. REUSE OF THIS DOCUMENT OR ANY INFORMATION CONTAINED IN THIS DOCUMENT FOR ANY PURPOSE IS PROHIBITED UNLESS WRITTEN PERMISSION FROM BOTH POWER AND POWER'S CLIENT IS GRANTED.

					POWER ENGINEERS	MATERIAL SPECIFICATION		REV
						PIPE	YHD	0
0	09.14.22	STH	JRC	STH	ENGINEERING STANDARD	CARBON STEEL: ASTM A106B, CL 150, SCH STD/80, BW & SW, WITH CS SCH STD/80, DOUBLE CONTAINMENT		0.02
REV	DATE	DSGN	CHK	APPD			SHEET 9 OF 15	

LEAK DETECTION (VISUAL)

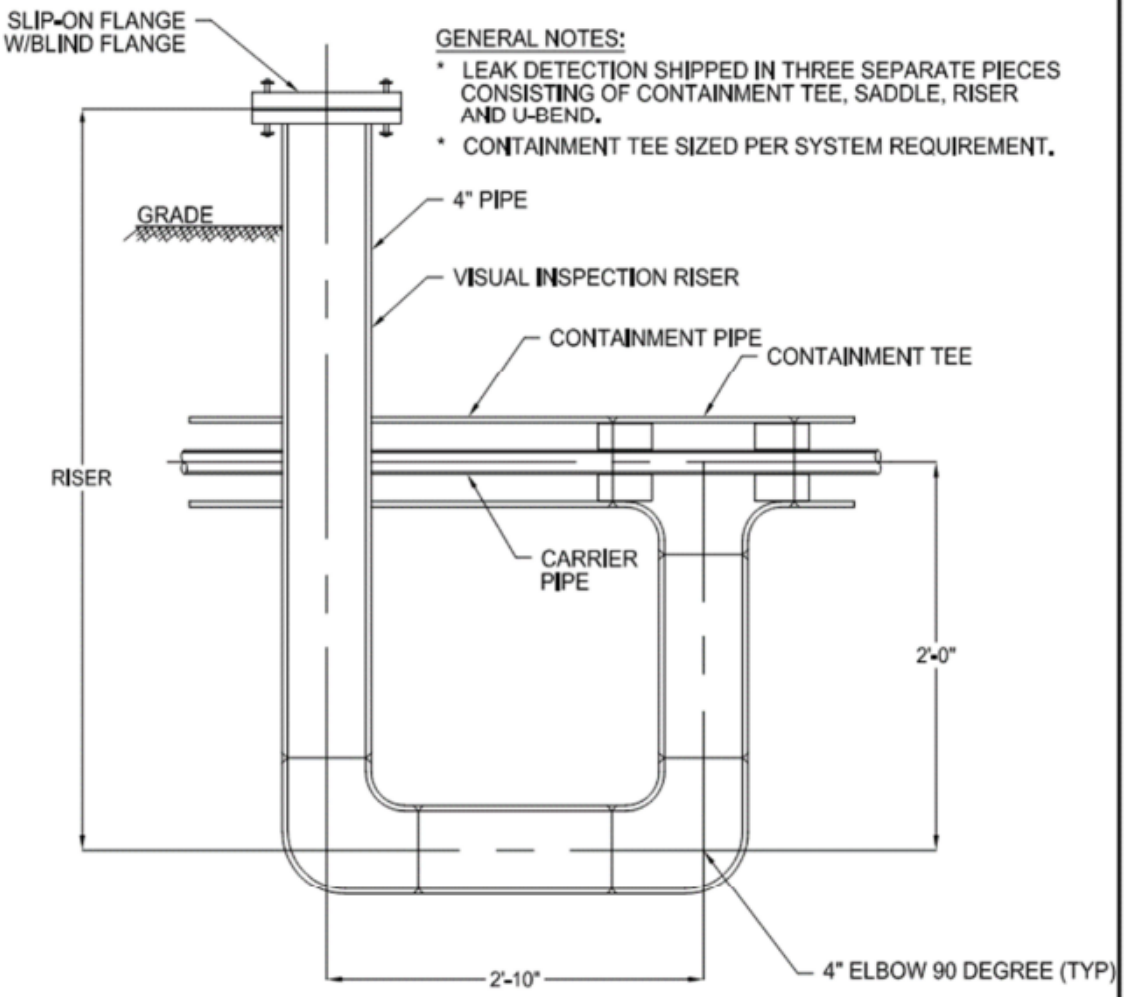

DETAIL 6
SCALE: NTS

THIS DOCUMENT WAS PREPARED BY POWER ENGINEERS, INC. FOR SPECIFIC PROJECTS, AND UNIQUE REQUIREMENTS OF THE PROJECTS. REUSE OF THIS DOCUMENT OR ANY INFORMATION CONTAINED IN THIS DOCUMENT FOR ANY PURPOSE IS PROHIBITED UNLESS WRITTEN PERMISSION FROM BOTH POWER AND POWER'S CLIENT IS GRANTED.

					POWER ENGINEERS	MATERIAL SPECIFICATION	YHD	REV 0
						PIPE		0.02
0	09.14.22	STH	JRC	STH	ENGINEERING STANDARD	CARBON STEEL: ASTM A106B, CL 150, SCH STD/80, BW & SW, WITH CS SCH STD/80, DOUBLE CONTAINMENT		
REV	DATE	DSGN	CHK	APPD			SHEET 10 OF 15	

LEAK DETECTION (SENSOR W/ PUMPOUT)

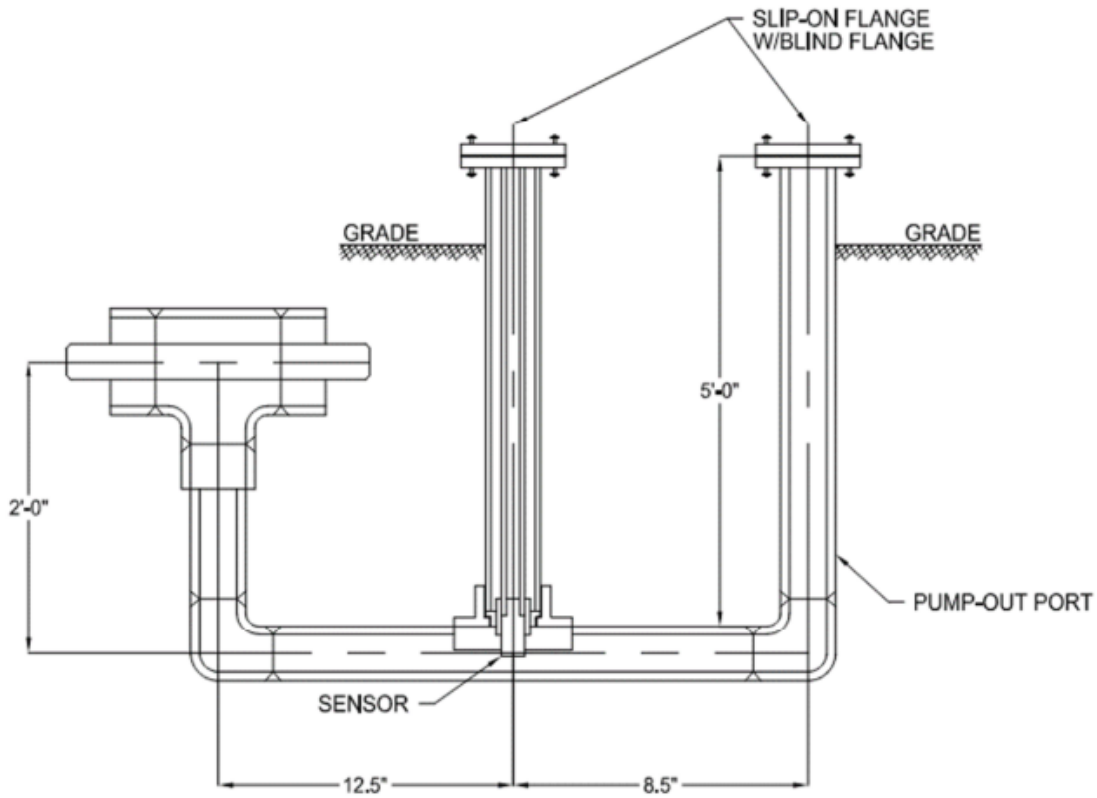

GENERAL NOTES:

* ALL FITTINGS ARE FACTORY TESTED.
* LEAK DETECTION SHALL BE SHIPPED AS COMPONENT PIECES FOR FIELD INSTALLATION.
* CONTAINMENT TEE SIZED PER SYSTEM REQUIREMENT.

DETAIL 7
SCALE: NTS

THIS DOCUMENT WAS PREPARED BY POWER ENGINEERS, INC. FOR SPECIFIC PROJECTS, AND UNIQUE REQUIREMENTS OF THE PROJECTS. REUSE OF THIS DOCUMENT OR ANY INFORMATION CONTAINED IN THIS DOCUMENT FOR ANY PURPOSE IS PROHIBITED UNLESS WRITTEN PERMISSION FROM BOTH POWER AND POWER'S CLIENT IS GRANTED.

					POWER ENGINEERS	MATERIAL SPECIFICATION	YHD	REV
						PIPE		
					ENGINEERING STANDARD	CARBON STEEL: ASTM A106B, CL 150, SCH STD/80, BW & SW, WITH CS SCH STD/80, DOUBLE CONTAINMENT		0 0.02
0	09.14.22	STH	JRC	STH			SHEET 11 OF 15	
REV	DATE	DSGN	CHK	APPD				

LEAK DETECTION (SENSOR CABLE)

THESE GENERAL REQUIREMENTS ARE INTENDED AS A GUIDE ONLY AND ARE NOT A SUBSTITUTE FOR THE DETAILED INSTRUCTIONS GIVEN BY THE MANUFACTURER. IN ALL CASES, THE DESIGNER AND INSTALLER SHALL CONTACT THE MANUFACTURER FOR SPECIFIC DESIGN INSTALLATION INSTRUCTIONS.

NOTE 1. THE LEAK DETECTION CABLE SHOULD BE INSTALLED IN THE GAP BETWEEN THE CARRIER AND CONTAINMENT PIPE SECTIONS, AT THE "6 O'CLOCK POSITION".

* EVERY 250 TO 400 FEET OF STRAIGHT RUN PIPE

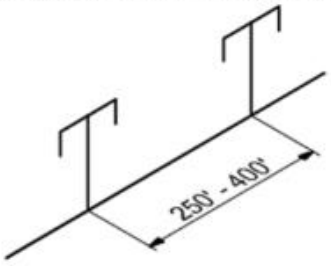

* AT EVERY CABLE ENTRY AND TERMINATION POINT

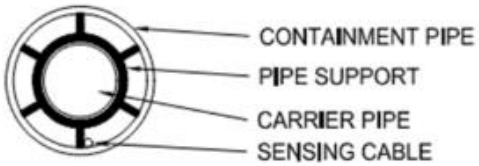

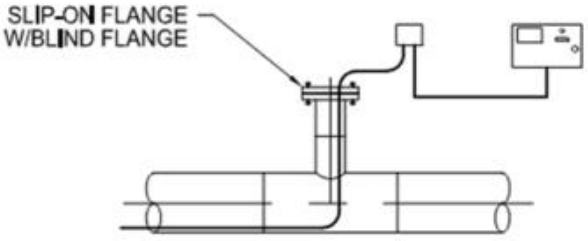

NOTE 2. ACCESS POINTS TO THE PIPE ARE REQUIRED FOR PROPER INSTALLATION OF THE SENSING CABLE AND FOR FUTURE MODIFICATION. AN ACCESS TEE SHOULD BE PLACED AT THE FOLLOWING POINTS IN THE SYSTEM:

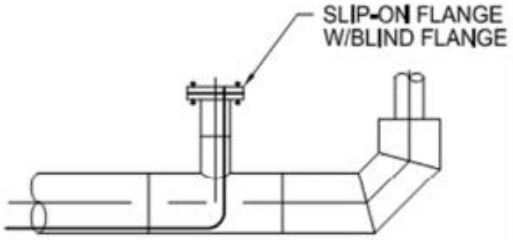

DETAIL 8
SCALE: NTS

THIS DOCUMENT WAS PREPARED BY POWER ENGINEERS, INC. FOR SPECIFIC PROJECTS, AND UNIQUE REQUIREMENTS OF THE PROJECTS. REUSE OF THIS DOCUMENT OR ANY INFORMATION CONTAINED IN THIS DOCUMENT FOR ANY PURPOSE IS PROHIBITED UNLESS WRITTEN PERMISSION FROM BOTH POWER AND POWER'S CLIENT IS GRANTED.

					POWER ENGINEERS	MATERIAL SPECIFICATION		REV
						PIPE	YHD	0
					ENGINEERING STANDARD	CARBON STEEL: ASTM A106B, CL 150, SCH STD/80, BW & SW, WITH CS SCH STD/80, DOUBLE CONTAINMENT		0.02
0	09.14.22	STH	JRC	STH			SHEET 12 OF 15	
REV	DATE	DSGN	CHK	APPD				

LEAK DETECTION (SENSOR CABLE)

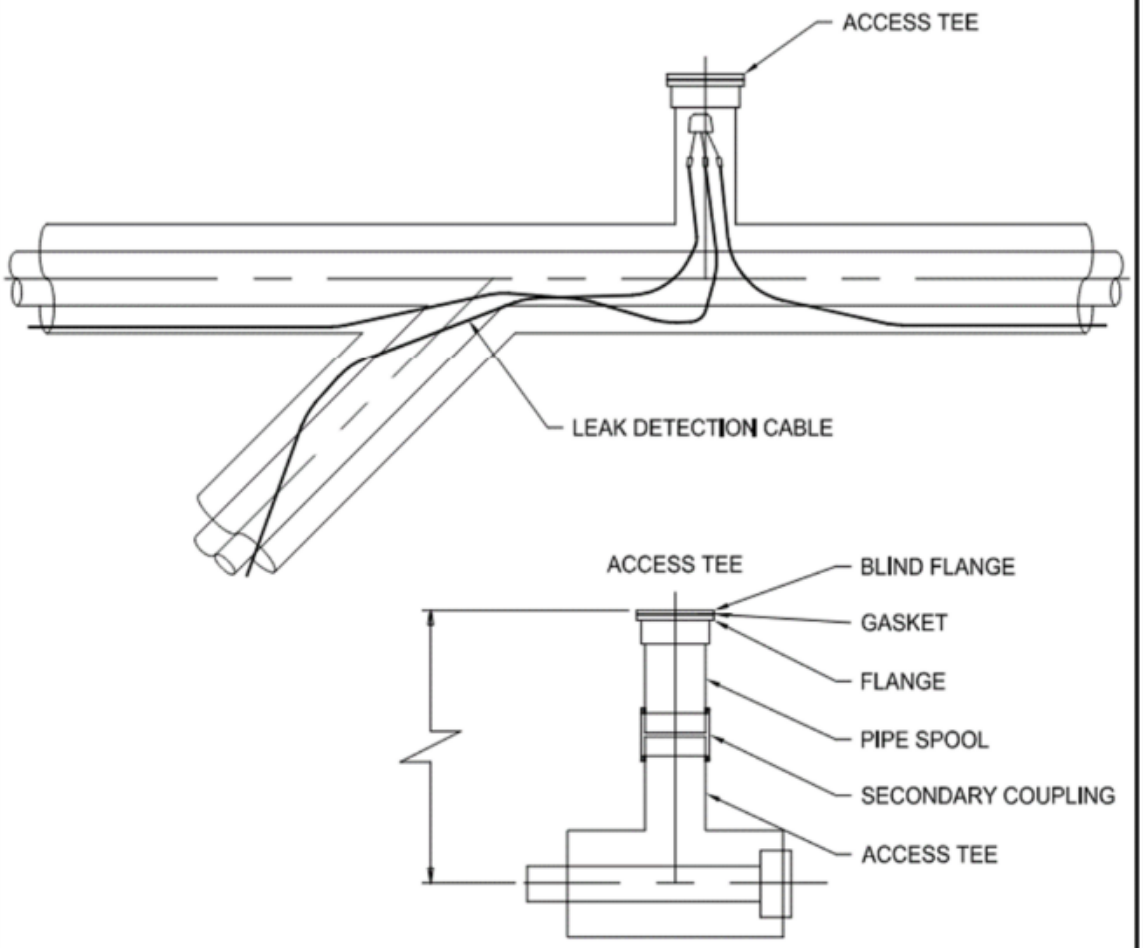

DETAIL 9

SCALE: NTS

THIS DOCUMENT WAS PREPARED BY POWER ENGINEERS, INC. FOR SPECIFIC PROJECTS, AND UNIQUE REQUIREMENTS OF THE PROJECTS. REUSE OF THIS DOCUMENT OR ANY INFORMATION CONTAINED IN THIS DOCUMENT FOR ANY PURPOSE IS PROHIBITED UNLESS WRITTEN PERMISSION FROM BOTH POWER AND POWER'S CLIENT IS GRANTED.

					POWER ENGINEERS	MATERIAL SPECIFICATION	YHD	REV
						PIPE		0
0	09.14.22	STH	JRC	STH	ENGINEERING STANDARD	CARBON STEEL: ASTM A106B, CL 150, SCH STD/80, BW & SW, WITH CS SCH STD/80, DOUBLE CONTAINMENT		0.02
REV	DATE	DSGN	CHK	APPD			SHEET 13 OF 15	

TERMINATION W/ TEST FITTING

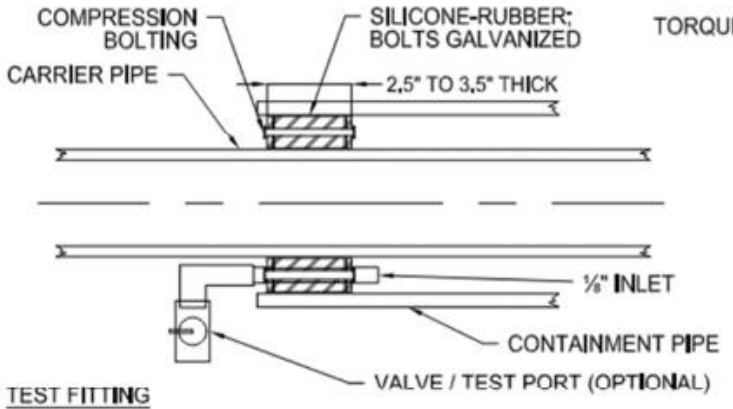

TORQUE SEQUENCE FOR INSTALLATION

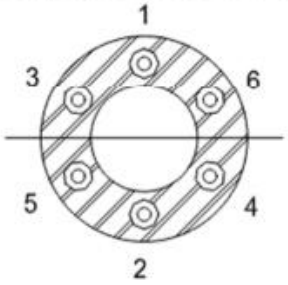

END VIEW

TEST FITTING

THIS TEST FITTING IS DESIGNED TO SEAL THE INTERSTITIAL SPACE AND PROVIDE A PRESSURIZATION PORT FOR TESTING PURPOSES. WHEN PERMANENTLY INSTALLED IT ACTS AS A TERMINATION FITTING WITH A DRAIN VALVE. IT IS ALSO USED TEMPORARILY TO TEST CONTAINMENT JOINTS IN SUBASSEMBLIES BEFORE JOINING TO YOUR NEXT SUBASSEMBLY. ONCE A SUCCESSFUL PRESSURE TEST IS COMPLETED, THE FITTING CAN BE REMOVED AND REUSED. TO PROPERLY TEST THE CONTAINMENT PIPE JOINTS, IT IS NECESSARY TO FIRST SEAL THE INTERSTITIAL SPACE LOCATED AT BOTH ENDS OF THE PIPE RUN. SECONDLY PROVIDE A PORT TO PRESSURIZE AND DEPRESSURIZE THE SECTION OF PIPE TO BE TESTED.

GENERAL NOTES:

1. TERMINATION TO BE LINK-SEAL® T - GALVANIZED.

INSTALLATION PROCEDURE

TERMINATION FITTINGS ARE SHIPPED TO JOB SITE COMPLETELY ASSEMBLED AND READY FOR FIELD INSTALLATION.

SIMPLY SLIDE THE TERMINATION FITTING OVER THE CARRIER PIPE AND INTO THE END OF THE CONTAINMENT PIPE, RECESSING IT APPROXIMATELY ONE INCH FROM THE CONTAINMENT PIPE END. AS THE BOLTS ARE TIGHTENED, THE END PLATES COMPRESS THE ELASTOMERIC MATERIAL CREATING A SEAL BETWEEN THE CARRIER AND CONTAINMENT PIPE.

TIGHTEN ALL BOLTS FOLLOWING THE TORQUE SEQUENCE, WHEN HDPE, POLYPRO, PVDF AND FRP CONTAINMENT PIPES ARE USED, INSTALLATION OF A RESTRAINING COLLAR IS NECESSARY.

NOTE: I.D. AND O.D. OF TERMINATION FITTING ARE SIZED PER SPECIFIED CARRIER AND CONTAINMENT PIPE.

CAUTION: NEVER EXCEED ALLOWABLE TEST PRESSURE FOR CONTAINMENT PIPE.

DETAIL 10

SCALE: NTS

THIS DOCUMENT WAS PREPARED BY POWER ENGINEERS, INC. FOR SPECIFIC PROJECTS, AND UNIQUE REQUIREMENTS OF THE PROJECTS. REUSE OF THIS DOCUMENT OR ANY INFORMATION CONTAINED IN THIS DOCUMENT FOR ANY PURPOSE IS PROHIBITED UNLESS WRITTEN PERMISSION FROM BOTH POWER AND POWER'S CLIENT IS GRANTED.

					POWER ENGINEERS	MATERIAL SPECIFICATION	YHD	REV
						PIPE		0
					ENGINEERING STANDARD	CARBON STEEL: ASTM A106B, CL 150, SCH STD/80, BW & SW, WITH CS SCH STD/80, DOUBLE CONTAINMENT		0.02
0	09.14.22	STH	JRC	STH			SHEET 14 OF 15	
REV	DATE	DSGN	CHK	APPD				

SCREENED VENT PIPE

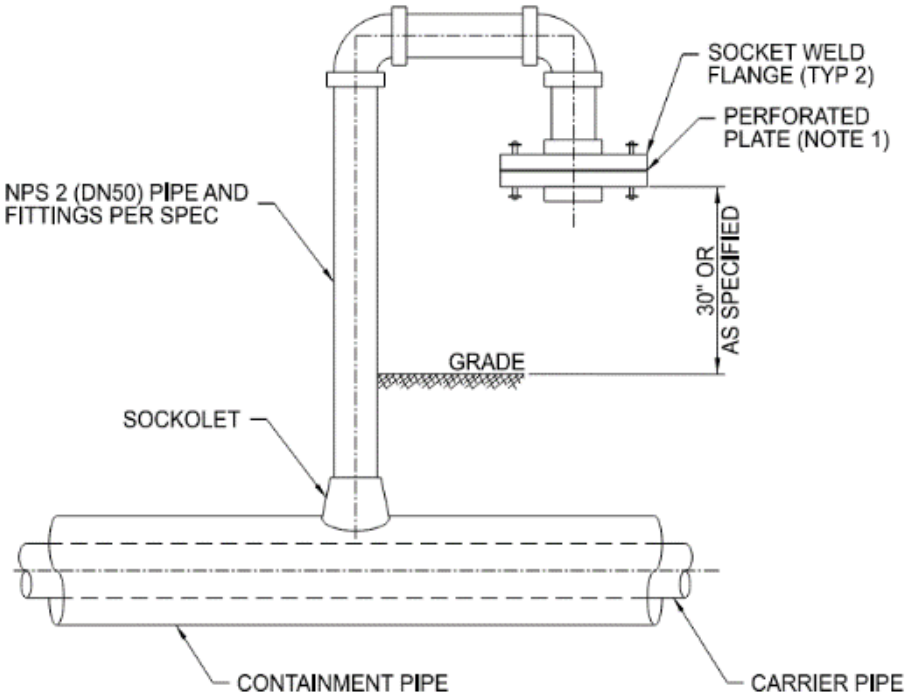

GENERAL NOTES:

1. PERFORATED FLAT PLATE, 12GA, 304 STAINLESS STEEL, UNS S30400. 0.3125 IN. (8 mm) PERFORATIONS ON 0.4375 IN. (11 mm) CENTERS. 45% MINIMUM OPEN AREA.
2. USE ONLY FOR NON-PRESSURIZED CONTAINMENT SYSTEM. DO NOT USE ON SEALED CONTAINMENT SYSTEMS.
3. LOCATE VENTS AS REQUIRED TO ENSURE ADEQUATE VENTING OF CONTAINMENT PIPE AND KEEP INTERSTITIAL SPACE AT AMBIENT PRESSURE.

DETAIL 11

SCALE: NTS

THIS DOCUMENT WAS PREPARED BY POWER ENGINEERS, INC. FOR SPECIFIC PROJECTS, AND UNIQUE REQUIREMENTS OF THE PROJECTS. REUSE OF THIS DOCUMENT OR ANY INFORMATION CONTAINED IN THIS DOCUMENT FOR ANY PURPOSE IS PROHIBITED UNLESS WRITTEN PERMISSION FROM BOTH POWER AND POWER'S CLIENT IS GRANTED.

					POWER ENGINEERS	MATERIAL SPECIFICATION	YHD	REV
						PIPE		0
0	09.14.22	STH	JRC	STH	ENGINEERING STANDARD	CARBON STEEL: ASTM A106B, CL 150, SCH STD/80, BW & SW, WITH CS SCH STD/80, DOUBLE CONTAINMENT		0.02
REV	DATE	DSGN	CHK	APPD			SHEET 15 OF 15	

PIPE / FITTING SUPPORT



2-PIECE
FOR 3/4" TO 12" (1.9 TO 30.48cm).

GENERAL NOTES:

1. LENGTH IS SIZED TO FIT BORE OF CONTAINMENT PIPE.
2. I.D. SIZED TO PROVIDE NON-SLIP AGAINST CARRIER PIPE. CLIP IS APPROX. 2" WIDE.
3. INTERSTITIAL SUPPORT: PSI MODEL PE NON-METALLIC CASING SPACERS HIGH-TEMP MODEL.

MODEL SIZE	BAND WIDTH	RUNNER HEIGHT
¾" X 2"	3.0" (76.19mm)	5/16" (7.94mm)
1" X 3"	3.0" (76.19mm)	½" (12.7mm)
1 ¼" X 3"	3.0" (76.19mm)	½" (12.7mm)
1½" X 3"	3.0" (76.19mm)	½" (12.7mm)
2" X 4"	4.0" (101.6mm)	5/8" (15.88mm)
2½" X 5"	4.0" (101.6mm)	5/8" (15.88mm)
3" X 6"	4.0" (101.6mm)	5/8" (15.88mm)
4" X 6"	4.0" (101.6mm)	9/16" (14.29mm)
4" X 8"	4.0" (101.6mm)	1" (25.4mm)
6" X 8"	4.0" (101.6mm)	9/16" (14.29mm)
6" X 10"	4.0" (101.6mm)	1" (25.4mm)
6" X 10S""	4.0" (101.6mm)	9/16" (14.29mm)
8" X 10"	4.0" (101.6mm)	9/16" (14.29mm)
8" X 12"	5.0" (127.0mm)	1" (25.4mm)
8" X 12S""	5.0" (127.0mm)	7/8" (22.23mm)
10" X 14"	5.0" (127.0mm)	7/8" (22.23mm)
10" X 16"	5.0" (127.0mm)	7/8" (22.23mm)
12" X 16"	5.0" (127.0mm)	7/8" (22.23mm)
ALL MULTIPLE SEGMENTS*	6.25" (158.75mm)	1" (25.4mm)

DETAIL 12
SCALE: NTS

THIS DOCUMENT WAS PREPARED BY POWER ENGINEERS, INC. FOR SPECIFIC PROJECTS, AND UNIQUE REQUIREMENTS OF THE PROJECTS. REUSE OF THIS DOCUMENT OR ANY INFORMATION CONTAINED IN THIS DOCUMENT FOR ANY PURPOSE IS PROHIBITED UNLESS WRITTEN PERMISSION FROM BOTH POWER AND POWER'S CLIENT IS GRANTED.

END OF SECTION

INTENTIONALLY LEFT BLANK

SECTION 23 12 13
FUEL OIL TRANSFER EQUIPMENT

PART 1 GENERAL

1.01 SECTION INCLUDES

A. This Specification defines the requirements for the pump skid that returns fuel oil from the day tank at the West Power Complex to the main bulk storage tanks, the Fuel Oil Return Pump Skid. The skid shall be a close-coupled, base-mounted, external gear, positive displacement fuel oil pump package, including pumps, electric motor drivers, mechanical seals, skid mounting, and other appurtenances.

B. The intent is a system that shall require minimal maintenance and down time over a 30-year life.

C. Each component shall include features needed for safe, highly reliable, efficient, long-term operation. Design shall be in accordance with good engineering practice, applicable standards, and shall meet the strict demands typical of industrial power plants for safety and reliability, as well as those imposed by all regulatory agencies having jurisdiction in the State of Louisiana.

D. Related Sections:

1. Section 01 45 36, Equipment Seismic Certification.
2. Section 01 88 15, Anchorage and Bracing.
3. Section 05 05 23, Welding.
4. Section 09 90 01, Painting Protective Coatings.
5. Section 40 50 20, Aboveground Power Plant Piping.
6. Section 40 55 00, Power Plant Valves.
7. Section 48 58 68, Welding of Power Plant Piping.

1.02 REFERENCE STANDARDS AND CODES

A. The equipment, materials and services furnished under this Specification shall meet or exceed the requirements of all applicable federal, state and local codes; standards and regulations; and the applicable codes, standards, and specifications of the following organizations:

1. AFBMA - The Anti-Friction Bearing Manufacturer's Association.
2. AGMA - American Gear Manufacturers Association.
3. AISC - American Institute of Steel Construction.
4. AISI - American Iron and Steel Institute.

5. ANSI - American National Standards Institute: B15.1, Safety Standards for Mechanical Power Transmission Apparatus.
6. API – American Petroleum Institute.
7. ASME - American Society of Mechanical Engineers: B16.5, Pipe Flanges and Flanged Fittings.
8. ASTM - American Society for Testing and Materials:
    a. A322, Standard Specification for Steel Bars, Alloy, Standard Grades.
    b. A823, Standard Specification for Statically Cast Permanent Mold Gray Iron Castings.
9. AWS - American Welding Society.
10. EPA - Environmental Protection Agency.
11. FM - Factory Mutual.
12. HEI - Heat Exchange Institute.
13. HI – Hydraulic Institute.
14. IEEE - Institute of Electrical and Electronics Engineers.
15. ISA - Instrumentation, Systems, and Automation Society.
16. NEC - National Electrical Code.
17. NEMA - National Electrical Manufacturers Association.
18. NESC - National Electrical Safety Code.
19. NFPA - National Fire Protection Association:
    a. 30, Flammable and Combustible Liquids Code.
    b. 70, National Electric Code.
20. OSHA - Occupational Safety and Health Administration.
21. SSPC - National Steel Structures Painting Council.
22. TEMA - Tubular Exchanger Manufacturers Association.
23. IBC - International Building Code.
24. UL.

B. While a number of applicable sections of the aforementioned codes and standards have been identified in portions of this Specification, the Contractor has the ultimate responsibility for the complete identification and execution of all applicable sections of the aforementioned codes and standards.

C. Unless otherwise stated, these codes, standards or material specifications shall be the latest revisions, including all effective publications, supplements, addenda and editions in effect at the issuance date of this Document.

D. These codes and standards set forth the minimum requirements. These may be exceeded by the Contractor if, in its judgment and with Owner's acceptance, superior or more economical designs or materials are available.

E. The most severe requirements shall prevail in the event of conflict between requirements, specifications and applicable and governing codes. All conflicts among the Codes, specifications and/or purchase order shall be brought to the Owner's attention for written resolution prior to release for fabrication.

F. It is the Contractor's responsibility that all equipment and materials furnished and installed be in strict conformity with all current, applicable codes and regulations of the State of Louisiana. Violations resulting from stipulations in the existing codes shall be corrected by the Contractor at its own expense.

G. The Contractor shall be responsible for obtaining copies and paying all costs of all applicable codes and regulations.

1.03 QUALIFICATIONS

A. Only Contractors with demonstrated experience in the manufacturing, testing, and servicing of packaged fuel oil equipment shall be considered qualified.

B. The successful bidder shall submit a complete list of fuel oil transfer equipment customers to document demonstrated experience.

1.04 DOCUMENTATION

A. Submit Shop Drawings and product data under provisions of Section 01 33 00, Submittal Procedures.

B. Submit Operations and Maintenance Manuals under provisions of Section 01 78 23, Operation and Maintenance Data.

C. Product Data: Submittals shall be per schedule and descriptions.

D. Routine Maintenance Schedule, Parts and Service:

1. Provide a complete schedule of normally required inspection, preventative maintenance, predictive maintenance, and overhaul tasks and the outage hours required for all of the equipment supplied under this purchase order, plus replacement parts associated with each task. Provide inspection and maintenance plan required to support the minimum on-line availability specified herein. List requirements by year with a list of recommended spare parts for each through one entire cycle.
2. Submit an itemized list and pricing for recommended spare parts for 2 years of normal operation, including expendables, beyond first year of operation.
3. Submit an itemized list and pricing for all required tools including any special lifting fixtures to support on-site maintenance of the pumps.
4. Submit itemized pricing for Long Term Service Agreement. Service agreement term to be no less than 5 years.

5. For each inspection, preventative maintenance and overhaul task, list the following:
    a. Tools required.
    b. Materials required.
    c. Associated warnings and cautions.
    d. Initial system conditions required.
    e. Procedure.

1.05 QUALITY ASSURANCE

A. Provide manufacturer's certification that materials meet or exceed minimum requirements as specified.

B. The Contractor shall have in place a complete and functioning comprehensive Quality Assurance program covering the design, procurement, fabrication, packaging and delivery of the specified equipment and materials. This program shall insure that the equipment and materials furnished by the Contractor meet the requirements of this Specification as well as the Contractor's own procedures and processes.

C. Electrical Components, Devices, and Accessories: Listed and labeled as defined in NFPA 70 (National Electrical Code), by a qualified testing agency, such as UL, FM approvals, and marked for intended location and application.

D. It shall be the Contractor's responsibility to ensure that their Suppliers, Sub-Suppliers and Sub-Contractors meet the intent of this requirement and are able to demonstrate their compliance.

E. Owner or its representative shall be given opportunity to witness all testing.

F. The owner reserves the right to reject equipment and/or components which require major alteration to meet specifications.

G. Non-conformances to this Specification and major equipment or component repairs that occur shall be documented and approved by the Owner in writing prior to testing and shipment.

H. All pump casing weld repairs shall be approved by Contractor and Owner prior to repair.

1.06 APPLICATION

A. The fuel oil transfer equipment described herein shall be installed as part of a new West Power Complex (WPC) facility at The Sewerage and Water Board of New Orleans' Carrollton Water Treatment Plant.

B. The purpose of the fuel oil transfer system shall be to provide clean, water-free No. 2 Fuel Oil to and from existing storage tanks. The skid package for

the fuel oil transfer system pumps fuel oil from the new Fuel Oil Day Tank to the existing Fuel Oil Storage tanks. The system scope shall generally consist of:

1. Duplex basket strainers to be installed at the fuel oil transfer pump suction for removal of coarse solids. Basket strainers shall be included in pump package skid enclosure specified herein.
2. Fuel oil transfer pump package. Pump package shall be installed outdoors on Contractor-furnished skid as described herein.

C. The pumps and auxiliary equipment shall be capable of continuous service.

D. Asbestos, polychlorinated biphenyls (PCBs) and lead-based paint shall not be used anywhere in the equipment supplied by Contractor, including suppliers and sub-suppliers. Use of ceramic fiber shall be noted where used.

E. Site ambient conditions and other design criteria are shown in Specification Section 01 61 00, Common Product Requirements.

F. Control of this equipment shall be by the Balance of Plant Control System in Section 40 94 23, PSS Balance of Plant Control System.

PART 2 PRODUCTS

2.01 APPROVED MANUFACTURERS

A. Fuel Oil Pump/Piping Package, Skid, and Enclosure:

1. Accelerated Production Systems.
2. Aether DBS.
3. Integrated Flow Solutions.
4. Thermal and Mechanical Equipment Company (TMEC).
5. “Or-equal,” Owner approved.

B. Fuel Oil Transfer Pumps:

1. Roper.
2. Viking Pump.
3. SK Systems.
4. Earthsafe Systems.
5. Corken.
6. IMO.
7. “Or-equal,” Owner approved.

C. Fuel Oil Basket Strainers:

1. Mueller.
2. Spirax / Sarco.
3. Leslie.

4. Fabrotech Industries.
5. Keckley.
6. "Or-equal," Owner approved.

D. Fuel Oil Pressure Relief Valves:

1. Fisher.
2. Masoneilan.
3. "Or-equal," Owner approved.

E. Miscellaneous Equipment:

1. Electric Motors:
   a. Baldor.
   b. General Electric.
   c. Siemens.
   d. TECO/Westinghouse.
   e. US Motors.
   f. "Or-equal," Owner approved.
2. Mechanical Seals:
   a. Flowserve.
   b. John Crane.
   c. "Or-equal," Owner approved.

2.02 PERFORMANCE GUARANTEES

A. The Bidder shall guarantee that the performance of each fuel oil pump shall be as scheduled when operating under the conditions described herein and on the Drawings.

B. The sound level for each pump and regulator shall be guaranteed not to exceed 85 dBA when installed in a free field, measured at points spaced 6 feet apart around the assembly, at a distance of 3 feet from the package and a height of 3 feet, using the "A" scale with a meter that conforms to ANSI S1.4.

C. The rated motor horsepower selected for each pump shall satisfy the range of described operating conditions without encroaching on the service factor of the motor.

D. Each pump shall perform as specified over the full range of operating conditions with minimal vibration and noise. Refer to the pump schedule shown on the Drawings for specific operating requirements.

2.03 DESIGN REQUIREMENTS

A. The intent of this Specification is to utilize the Contractor's Supplier's standard equipment design where possible. However, the specific design features discussed herein shall be included as a minimum.

B. All materials furnished by the Contractor shall be new and free of defects or damage.

C. Delegated Foundation Anchorage Design:

1. Design foundation anchorage for pump skids and all associated equipment. Anchorage design shall be in accordance with all applicable codes and standards as listed on the Project Drawings.
2. Loading criteria shall include all applicable gravity, lateral, seismic and equipment operating loads. Delegated engineer shall coordinate as required with equipment manufacturer to determine applicable loading.
3. Anchorage layout and design shall be based on final approved equipment Shop Drawings and shall consider foundation size, thickness and edge distances as shown on the Project Drawings.
4. Submit design calculations and Drawings for anchorage signed and sealed by a professional engineer registered in Louisiana for review and approval prior to installation.
5. Submit Drawings for review and approval prior to installation. Drawings shall show all information required to complete installation of equipment anchorage, including but not limited to anchor rod diameter, material, embedment depth, and layout.
6. Related Requirements Section 01 88 15, Anchorage and Bracing and Section 01 45 36, Equipment Seismic Certification. These two specifications are highest in priority in case of any conflicting requirements

D. Close-Coupled, Base-Mounted, External Gear Pumps for Fuel Oil Transfer Service:

1. Description: Factory-assembled and tested, external gear, positive displacement pump package, including interconnecting piping, valves, and instrumentation as depicted on the Piping & Instrumentation Diagrams.
2. Pump Construction:
    a. Casing: Cast iron ASTM A823.
    b. Gears: Heat treated steel.
    c. Pump Shaft: Heat treated steel ASTM A322.
    d. Seal: Mechanical.
    e. Drive: magnetic, sealless.
    f. Pump Bearings: Anti-friction needle bearings.
    g. Coupling Guard: Dual rated; ANSI B15.1, Section 8; OSHA 1910.219 approved; steel; removable; attached to mounting frame.
    h. Pressure Relief: External relief valve sized for full pump capacity, return to suction piping as depicted on the P&ID.
    i. Capacities and Characteristics: Refer to Pump Schedule on the Drawings.

3. Each pump shall be equipped with a direct-connected electric motor driver meeting motor specification Section 26 26 13, Low Voltage AC Induction Motors, as well as the following requirements:
    a. 480V, 3-phase, 60Hz, non-overloading, TEFC.
    b. NEMA Premium Efficiency™, rated for outside duty.
    c. Motors shall be equipped with bearing and stator winding RTD's.
    d. All pumps are to be selected to be non-overloading in the range of 0 to 150 percent of the pump selected flow rate at 100 percent speed.
    e. All pump motors shall be selected to operate with a service factor as specified in Section 26 26 13, Low Voltage AC Induction Motors. Motors shall not be designed to operate over nominal motor horsepower.
    f. Horizontal alignment bolts for motor drivers shall be furnished on baseplate.
    g. It shall be the responsibility of the Contractor to ensure their pump Supplier obtains motors for the selected pumps which meet the requirements of these specifications. Refer to motor specification Section 26 26 13, Low Voltage AC Induction Motors for additional details.
4. Affix an embossed Type 316 stainless steel metal nameplate, 16-gauge minimum thickness to each pump indicating as a minimum: rated GPM and TDH, pump model and size, actual impeller diameter, BHP, serial number, casing, pump tag number, and materials of construction.
5. Contractor shall submit a parts list showing the materials of construction for all pump parts. The list shall include Brinell hardness values.

E. Skid Mounting:

1. Entire multi-pump package including pumps, motors, coupling guards, interconnecting piping, valves, and basket strainers as depicted on Piping and Instrumentation Diagram (P&ID) P550 – Fuel Oil (skid boundary noted thereon) shall be mounted on a common painted carbon steel or cast iron drip containment base with integral drip rim and threaded pipe drain connection.
2. Pump package shall be equipped with a junction box for wiring connection of the pump instrumentation and controls wiring. The junction box shall be a NEMA 4X enclosure, capable of interface with Plant SCADA System (integration to be performed by Contractor). Digital and analog cables shall be separated into separate terminal block rows. Terminals to be Phoenix Contact "Or-equal," Owner approved. The 480V motor cables shall connect directly to the motor and not be included in the junction box. Junction box to be located at the southeastern corner of the skids, as located on the Mechanical Plan Drawing M111.
3. Base shall have enclosed ends and access to permit grouting.

4. Interconnecting piping and valves for the pump package shall be provided as depicted on the P&ID P550 – Fuel Oil, in accordance with Section 40 50 20, Aboveground Power Plant Piping and Section 40 55 00, Power Plant Valves, and the HC01 Pipe Specification Standard.
5. Instrumentation shall be provided as depicted on the P&ID and in accordance with Section 40 91 00, Instrumentation and Control Components.
6. Valves shall be provided as depicted on the P&ID and in accordance with Section 40 92 13, Process Control Valves and Regulators or Section 40 55 00, Power Plant Valves for non actuated.
7. Structural skid and enclosure shall be installed on a concrete pad in the existing fuel oil tank containment area. Structural skid shall be designed and constructed by Contractor and/or Contractor's Supplier.

F. Fuel Oil Basket Strainers:

1. Description:
   a. Pressure/Temperature rating: Refer to Piping Line List.
   b. Body Design: Simplex Basket-pattern.
   c. Body Material: Cast Carbon Steel, ASTM A216 Grade WCB.
   d. Ends: Flanged, Class 150.
   e. Strainer Basket: Perforated Type 316 stainless steel, Standard basket with 100 mesh inner screen.
   f. Cover retainers: Winged nuts.
   g. O-Ring: Viton.
   h. Provide tapped and plugged strainer drain port in basket retainer.
2. Strainer basket area shall have a ratio of free area to pipe size not less than 4 to 1 for pipe sizes up to and including 2-inch and 2-1/2 to 1 ratio for pipe sizes 2-1/2-inch and larger.
3. Include nipple and isolation valve on strainer drain port for each strainer.

G. Fuel Oil Backpressure Regulator:

1. Description: Pressure relief valve designed to hold the fuel oil distribution system below specified design pressure.
2. Refer to Section 40 92 13, Process Control Valves and Regulators, for further details.
3. Chemical Compatibility: Low Sulfur No. 2 Fuel Oil.
4. Pressure Set Point: TBD psig.
5. Valve Max Flow Rate: 110 gpm.

H. Drive-Thru Spill Containment Berm: Provide portable drive-thru spill containment berm suitable for diesel fuel use. Berm shall have 6 inches of clearance to allow trucks to drive over walls. Minimum capacity of the berm is 7,000 gallons. Berm shall have capped drains for rainwater release.

I. Tagging and Marking: Nameplates, pipe identification, and signs are specified in Section 01 58 53, Project Equipment Identification.

J. Painting:

1. Any surfaces that are not to be insulated or galvanized shall be prime coated and finish painted by the Contractor or Contractor's Supplier prior to the shipment using Contractor's or Contractor's Supplier's standard coating system, appropriate for the described service. Coating system shall be provided with a minimum 5-year warranty against manufacturer or application defects.
2. Finish coat color selection(s) shall be approved by Owner.

PART 3 EXECUTION

3.01 FACTORY TESTS AND INSPECTIONS

A. The Contractor or Contractor's Supplier shall test the equipment furnished under this Specification at the Contractor's or Contractor's Supplier's shop prior to shipment. Factory tests and inspections shall demonstrate the performance, quality, accuracy and workmanship characteristics. A complete description of the proposed factory tests, including hydrotest, shall be submitted for Owner review.

B. Pump casings shall be hydrostatically tested to 150 percent of design pressure in the shop per code requirements. Witnessing by Owner is not required; however, signed records and hydrotest charts shall be required prior to shipment. Hydrostatic testing shall be performed using demineralized water. No hydrostatic test shall be performed when ambient temperature and water temperature is lower than 60 degrees F.

C. Shop performance testing of each pump and motor assembly shall be completed to verify conformance with performance guarantees prior to shipment. Contractor shall notify the Owner a minimum of two weeks prior to the test date(s) to allow the option of observing, however, holding for witnessing is not required. Testing shall verify the following as a minimum:

1. Capacity.
2. Head.
3. Efficiency.
4. Brake Horsepower.
5. NPSHr.
6. Testing shall be performed at shutoff, minimum flow, design flow, maximum flow, and at least five equally spaced points between minimum and design flow points. Certified test curves and data shall be submitted to the Owner and approved prior to shipment.

D. Motor testing shall be completed in accordance with applicable codes and the manufacturer's recommendations prior to shipment.

E. Factory test witnessing by Owner may or may not be required; however, signed test records shall be required prior to shipment.

3.02 PERFORMANCE TESTING

A. The Contractor shall be required to demonstrate, by testing of the completed equipment skid while in operation, its ability to meet the specified performance requirements. These performance tests shall be conducted in order to meet the performance noted in 2.1.Q. The method of testing shall be in accordance with ASME Power Test Codes, or modification thereof, as mutually agreed upon between the Contractor and the Owner.

B. Contractor shall provide all temporary test equipment required.

3.03 PREPARATION FOR SHIPMENT

A. Contractor shall submit procedures for the cleaning, preservation, packaging, handling, lifting, shipping, and storage of the material and equipment provided under this order.

B. Equipment and piping shall be cleaned of all foreign material, dirt, scale, grease, oil, and chemical residues, etc., in accordance with the approved cleaning methods. Items shall be inspected for compliance with approved cleaning procedures. Items which are not immediately packaged or shipped shall be protected from contamination until preservation or packing is complete.

C. Equipment shall be drained, dried, degreased, and cleaned internally and externally after factory testing.

D. Each component shall be properly identified with an item number, utilizing a metal tag. All material shipped separately from the main pump base shall be tagged and boxed for shipment.

E. Prevent corrosion or damage of the equipment while it is in transit to the job site and during storage.

F. Prior to installation, the equipment will be stored outdoors. Equipment and materials shall be suitable for outdoor storage without adverse effects for a period of up to nine months at the job site, provided that suitable protection is provided. Sensitive equipment shall be stored in environmentally controlled locations. Contractor is responsible for the cost of repairing or replacing any component supplied which is affected adversely by weather conditions prior to acceptance.

G. Contractor shall provide all special tools for unloading, installation and maintenance of Contractor-furnished equipment. Special tools and handling equipment shall be packed separately and identified as included in the shipment. Spare gaskets shall not be bolted in place, but shall be packed separately and identified. Loose clips and similar small structural items shall be packed separately, marked, tagged, and attached to larger pieces.

H. All exposed machinery surfaces (threads, flange faces, gasket sealing surfaces, etc.) shall be coated with an easily removable protective coating. All weld bevels of carbon or ferritic alloy steel piping or equipment components that are to be welded by Contractor shall be coated on the inside and outside surfaces for a distance of 3 inches from the end of the component.

I. All flange openings shall be protected and made waterproof with bolted full size metal covers and gaskets. Flanges shall be furnished with one bolt for every other hole (minimum of four bolts). Threaded openings shall be plugged with threaded plugs of the same material as the connected part and sealed with PTFE tape thread sealant. Beveled and plain edge openings shall be suitably closed with solid metal wedge type connectors.

J. Piping shall not be designated as attachment points for lifting equipment.

K. Ship units fully assembled including piping factory installed. Disassemble units only as necessary for shipment or due to installation limitations at the site. Match mark disassembled components. Reinforce, brace and pack for shipment per applicable commerce requirements. Seal open ends subject to detrimental conditions with removable closures.

3.04 INSTALLATION

A. Install in accordance with manufacturer’s requirements.

B. Install anchor bolts and grout pump bases in accordance with HI 1.4 and the pump manufacturer’s requirements.

C. Do not exceed allowable nozzle loads when connecting piping.

D. Align pump and motor shafts in accordance with HI 1.1-1.2, 1.4 and the pump manufacturer’s requirements after grout has been set, anchor bolts have been tightened and piping connections have been made.

3.05 COMMISSIONING, STARTUP SUPERVISION, AND SITE ACCEPTANCE TESTING (SAT)

A. Contractor shall engage a factory authorized service representative to perform start-up service.

B. Initial Power-Up and Functional Verification: Upon completion of system installation at the Project Site the Contractor shall complete installation and start up checks in accordance with the manufacturer's requirements including verification of allowable nozzle loads, clean suction strainers, bearing lubrication, free rotation of pump and rotation in the correct direction.

C. Communication and Operation Verification: After the system is installed at the Project Site and made operational, the Contractor shall exercise all hardware, communication links, software, and configuration programs to ensure proper operation and prove compliance with the Specifications. The Owner's personnel shall use the system during startup, checkout, and initial operation of plant systems.

D. The Contractor shall supply all special tools or special equipment for erection, commissioning, and SAT of the Work.

E. Contractor shall submit an SAT procedure 30 days in advance of the SAT for review and approval. Approved Test Plan is a prerequisite to conducting SAT.

F. Any deficiencies or faulty conditions determined during these tests shall be promptly corrected by Contractor at no cost to Owner. The field running tests shall be performed again, at the Contractor's expense, to confirm satisfactory operation.

G. Final Acceptance cannot be given until all equipment is operating safely and satisfactorily, all system functions operational from the remote and local HMIs, and all punch list items are resolved to Owner's satisfaction. Successful demonstration that the control system is satisfactorily operating system equipment and related balance of plant equipment.

3.06 TRAINING

A. Contractor shall engage a factory authorized service representative to train the Owner's operations and maintenance personnel to adjust, operate and maintain the pumps.

B. Provide training so that the Owner can operate, maintain, and repair the complete system. Owner personnel will include Operators, Maintenance, and Engineering.

C. Provide competent, factory authorized personnel to provide instruction to O&M personnel. Include sufficient hours of training to provide complete training for operation and maintenance of the equipment and system.

D. Provide the name and resume of proposed instructor; instructor shall have at least 5 years of experience as an instructor, with 3 years of experience teaching the designated course. Instructor's primary language shall be English.

E. Owner reserves right to reject proposed instructor. Owner reserves right to have the Integrator repeat portions of the training (at Integrator's expense) if Owner feels training was inadequate.

F. Provide training manual that includes, as a minimum, the following:

1. Course objective.
2. Course outline.
3. Theory of operation.

3.07 SPARE PARTS

A. Spare parts and special tools required for one year of operation shall be provided per manufacturer's recommendations. Contractor shall submit list of these spare parts and special tools.

B. Spare parts and special tools for construction, commissioning and startup shall be included. Any such parts used during construction or startup shall be replaced.

C. Spare parts and special tools are to be packaged separately from the equipment and shipped along with the equipment. A tag shall be attached to each part showing equipment tag number, part name or description and Drawing reference and part item number.

D. All spare parts and special tools shall be supplied new and unused.

E. Contractor shall submit a list of recommended spare parts for long-term, reliable operation including pricing. Pricing shall be valid until Project closeout and acceptance.

3.08 O&M MANUALS

A. General: Provide the following:

1. Suggested startup procedures.
2. Suggested operational procedures.
3. Suggested routine and preventative maintenance activities and schedule.
4. Training material.
5. Alarm summaries.

B. Contractor shall deliver three-(3) hard copies and one-(1) digital copy of the O&M Manual.

3.09 PROTECTION

A. Protect equipment from construction or accidental damage during the installation period prior to system testing and turnover to the Owner.

PRODUCT DATA SHEET 0

PERFORMANCE DATA		
SKID NAME	FUEL OIL RETURN PUMP SKID	
PUMP TAG NUMBERS	WPCAUX-0-FO-P-03/04	
QUANTITY OF PUMPS	2	
	Required	Submitted
MANUFACTURER	BY MFG	
MODEL	BY MFG	
PUMPED FLUID	NO. 2 FUEL OIL	
CAPACITY, GPM	110	
HEAD, FT	130 TDH	
NPSHA, FT	69	
NPSHR, FT	BY MFG	
SHUT OFF HEAD, FT	BY MFG	
NORMAL OIL TEMPERATURE, °F	60	
MINIMUM OIL TEMPERATURE, °F	12	
EFFICIENCY, %	BY MFG	
POWER, HP	BY MFG	
SPEED, RPM	BY MFG	
PUMP MINIMUM FLOW, GPM	BY MFG	
PUMP HEAD AT MIN FLOW, FT	BY MFG	
PUMP CASING MATERIAL	CAST IRON	
PUMP IMPELLER MATERIAL	STAINLESS STEEL	
MAXIMUM SKID DIMENSIONS, FT	4X6	
PIPING CONNECTION SIZE, IN (INLET, OUTLET, RETURN)	3	
SKID WEIGHT, LB	BY MFG	
MOTOR MANUFACTURER	BY MFG	
MOTOR RATING	BY MFG	
MOTOR VOLTAGE	480	

END OF SECTION

INTENTIONALLY LEFT BLANK

23 12 13 – FUEL OIL TRANSFER EQUIPMENT ATTACHMENT 1

REQUIRED SUBMITTALS – The following submittal list shall be populated with WARO (Weeks After Receipt of Order) submittal dates and submitted by the Contractor within two weeks of Notice to Proceed.

	Information Required	
	Certified After Order	**WARO***
GENERAL DATA REQUIREMENTS		
Overall Scope of Supply & Equipment Description	X	
Submittal/Shop Drawing List & Schedule	X	
Schedule for Engineering, Fabrication, & Delivery	X	
Experience & Reference List		
Listing of all Sub-Suppliers and Subcontractors		
Description of Training Program Included		
Training Videos (DVD's)		
Description of Site Support Included		
Completed Performance Data Sheets and Guarantees	X	
Shipping Details & Weights	X	
Equipment Lifting & Rigging Drawings & Details	X	
Description of Noise Mitigation Provisions	X	
Shop Testing Procedures	X	
Field Testing Procedures		
Description of QA/QC Program		
Spare Parts List with Pricing		
Special Tools List		
Trim List		
General Arrangement Plans & Elevations	X	
Code Reports & Certifications	X	
Operation and Maintenance (O&M) Manuals	X	
MECHANICAL DATA REQUIREMENTS		
Process Flow Diagrams (PFD's)	X	
3D CAD Model(s) - Equipment & Piping	X	
Dimensional Layout Drawings	X	
Piping Drawings with Connection/Interface Tables	X	
Permissible Nozzle Loading	X	
Expected Thermal Movements - Equipment	X	
Expected Thermal Movements - Connection Interface Points	X	
Vendor-Furnished Pipe Support Details		
Clearance Requirements for Maintenance	X	
Equipment Design Details & Materials of Construction	X	
Equipment Data Sheets	X	
Bills of Material (BOM's)	X	
Weld Procedures & Welder Qualifications		
Performance Curves	X	
Performance Correction Curves		
Accessory Descriptions	X	
Utility Requirements (air, water, lube oil, etc.)	X	
Certified Material Test Reports (MTR's)	X	
Equipment Nameplate Facsimile		

	Information Required	
	Certified After Order	**WARO***
ELECTRICAL DATA REQUIREMENTS		
Motor List & Power Requirements	X	
DC System Load Requirements		
Accessory Descriptions	X	
Motor Data Sheets	X	
Motor Performance Curves	X	
One Line Diagrams		
Three Line Diagrams		
Connection/Interconnection Diagrams	X	
Schematics	X	
Wiring Diagrams	X	
Mounting Details	X	
Grounding Details	X	
Cable List	X	
Certified Test Reports	X	
Electrical Cabinet Dimensional Drawings	X	
Conduit Entrance Locations/Plan Drawings	X	
Bills of Materials (BOM's)	X	
INSTRUMENTATION & CONTROLS DATA REQUIREMENTS		
Piping & Instrumentation Diagrams (P&ID's)	X	
Control System PLC Description		
Control System Architecture Diagram		
Control Cabinet Dimensional Drawings		
Junction Box Dimensional Drawings	X	
SAMA / ISA (Analog) & Discrete Logic Diagrams		
Interconnection Diagrams	X	
Point-to-Point Wiring Diagrams	X	
Termination Diagrams	X	
Control Loop Diagrams		
Control System Power Requirements		
Cable List	X	
Instrument List (w/Process Ranges & Set Points)	X	
Instrument Installation Details / Dwgs	X	
Control Valve List		
Input/Output (I/O) Signal List - in EXCEL format file		
Alarm List with Setpoints - in EXCEL format file		
Component / Equipment List	X	
Instrument Data Sheets (ISA S-20)	X	
Control Valve Data Sheets (ISA S-20)	X	
Calibration Records for all Vendor-Furnished Instruments	X	
Graphical Display Screens (Screen Shots)		
Graphical Display Screens - Paging Architecture		
Engineering and Configuration Instructions		
Control System Test Plan(s) - FAT, CAT, Startup		
Control System Test Reports		
HMI Tagname Database - exported in EXCEL format file		
PLC Tagname Database - exported in EXCEL format file		
Modbus Registry/Map for integration of PLC data into Plant Control System		
HMI Appication(s) (CD or similar media software file) - min. 3 licenses		
PLC Application(s) (CD or silmilar media software file) - min. 3 licenses		

	Information Required	
	Certified After Order	**WARO***
CIVIL/STRUCTURAL DATA REQUIREMENTS		
Code Calculations		
Structural Steel Plans & Elevations	X	
Platform, Ladder, & Stair Drawings		
Equipment Enclosure Drawings & Details		
Foundation Loading Diagram (Static & Dynamic)	X	
Permissible and Guaranteed Equipment Vibration Levels - 50%, 75%, and 100% Load Points	X	
Location, Size, and Projection of Anchor Bolts, Sleeves, and/or Imbeds	X	
Equipment Weights (dry and operating)	X	
Field Erection Drawings & Details	X	
Equipment Grouting Requirements and/or Recommendations	X	

SECTION 23.13.13.33
FUEL OIL FORWARDING PUMP SKID

PART 1 GENERAL

1.01 SUMMARY

A. This Specification covers the requirements for the design, performance, manufacture, quality assurance, documentation, packing and shipping, manufacturer's field services providing technical direction of installation and field-testing support of one Fuel Oil Forwarding Pump Skid that delivers fuel oil from the main bulk storage tanks to the day tank at the West Power Complex. The fuel oil pump skid shall consist of 2 by 100 percent fuel forwarding pumps, suction strainers, all piping, valves, instrumentation, and electrical starters and control panel required to meet the specified performance and for safe operation. The pumps shall be close-coupled, base-mounted, external gear, positive displacement fuel oil pumps.

B. Related Sections:

1. Section 01 45 36, Equipment Seismic Certification.
2. Section 01 88 15, Anchorage and Bracing.
3. Section 05 05 23, Welding.
4. Section 09 90 01, Painting and Protective Coatings.
5. Section 40 50 20, Aboveground Power Plant Piping.
6. Section 40 55 00, Power Plant Valves.
7. Section 48 58 68,Welding of Power Plant Piping.

1.02 REFERENCES

A. ABMA – American Bearing Manufacturer's Association.

B. AFBMA – Anti-Friction Bearing Manufacturer's Association.

C. AGMA – American Gear Manufacturer's Association.

D. AISC – American Institute of Steel Construction.

E. AISI – American Iron and Steel Institute.

F. AMPP – Association for Materials Protection and Performance.

G. ANSI – American National Standards Institute.

H. API – American Petroleum Institute.

I. ASCE – American Society of Civil Engineers.

J. ASME – American Society of Mechanical Engineers.

K. ASTM – American Society for Testing and Materials.

L. AWS – American Welding Society.

M. AWWA – American Water Works Association.

N. FM – Factory Mutual System.

O. HI – Hydraulic Institute.

P. ICEA – Insulated Cable Engineers Association.

Q. IEEE – Institute of Electrical and Electronics Engineers.

R. MSS – Manufacturer's Standardization Society of Valve and Fitting Industry.

S. NACE – International.

T. NEC – National Electric Code.

U. NECA – National Electric Contractors Association.

V. NEMA – National Electrical Manufacturers Association.

W. NETA – ATS International Electrical Testing Association.

X. NFPA – National Fire Protection Association.

Y. OSHA – Occupational Safety and Health Administration.

Z. SSPC – Steel Structures Painting Council.

AA. UL.

1.03 SUBMITTALS

A. Submittal Procedures: Per Section 01 33 00, Submittal Procedures.

B. Product Data:

1. Submittals shall be per schedule and descriptions in 5.4 Schedule for Submission of Drawings and Data.
2. Final as-built drawings shall be provided in AUTOCAD software. A 3D model of the pump skid (a DWG or STEP file) shall also be submitted to incorporate into the overall project model.
3. A scale bar shall be included to permit use following photo-reduction.

4. Each Drawing shall clearly indicate the applicable status, e.g. Preliminary, for Information, for Review, for Approval, for Bid, for Construction or as-built. Drawings and Contractor information shall be in English and use the international system of units. All documents and Drawings submitted shall contain a revision number and date. Further, each time the document/Drawing is revised and resubmitted the revision number and date shall be updated. All changes to the Drawings/ documents shall be clearly identified so that the changes can be readily identified.
5. Drawings shall be fully completed and certified by the Contractor as to the compliance of the information contained thereon with the requirements of these Specifications. Drawings shall have title block entries clearly indicating the Drawing is certified. Drawings shall be reviewed by the Owner and processed as specified in Section 01 33 00, Submittal Procedures. Drawings shall be submitted in accordance with the specified schedule. The Contractor shall check and approve all Shop Drawings before submittal to the Owner.

C. Manufacturer's Installation Instructions: Contractor shall submit for Owner's review and approval Installation, Operation and Maintenance (IO&M) Manuals prepared for the specific equipment. The manuals shall be an integrated set consisting of information for all the individual pieces of equipment. Electronic and hard copies shall be submitted. The electronic copies of the IO&M Manuals shall be indexed and in a searchable electronic format to be agreed by the Owner. All referenced internal and external content shall be accessible via hyperlinks. Hard copy manuals shall have numbered loose-leaf pages with Section dividers.

D. Manufacturer's Certificate: Certify equipment meets or exceeds requirements in Part 2.

E. Manufacturer's Field Reports: Submit report of each visit of manufacturer's shop to provide technical assistance during installation.

1.04 CLOSEOUT SUBMITTALS

A. Section 01 77 00, Closeout Procedures.

B. Project Record Documents: Record final design of pump skids.

C. Operation and Maintenance Data: Submit spare parts lists for pumps.

1.05 QUALITY ASSURANCE

A. Perform Work in accordance with NFPA 30.

B. Perform Work in accordance with all State and Local requirements.

C. Factory Tests:

1. Perform all manufacturer standard factory tests on equipment and material.
2. Perform all tests required by the applicable codes and these Specifications.
3. Notify Owner and Engineer no less than two weeks prior to when tests are to be performed, so that they may have representatives witness the tests if desired.
4. Submit test reports containing results and certificates of completion of factory tests as compliance submittals.
5. All testing and inspection procedures shall be subject to Owner’s review prior to their implementation.

1.06 QUALIFICATIONS

A. All equipment and appurtenances furnished by Contractor shall have an acceptable history of satisfactory, reliable service in similar use for a period of at least three years at comparable temperature, pressure, voltage, and design stress levels.

B. Installation of the product shall be performed by Contractor specializing in performing Work of this Section with minimum 3 years' experience.

1.07 DELIVERY, STORAGE, AND HANDLING

A. Product Delivery Requirements:

1. Transport and handle products in accordance with manufacturer's instructions and as required to prevent product damage.
2. Promptly inspect shipments to ensure products comply with requirements, quantities are correct, and products are undamaged.
3. Provide equipment and personnel to handle products by methods to prevent soiling, disfigurement, or damage.
4. Deliver in manufacturer's unopened containers or packaging; dry and undamaged.
5. Each item of equipment and material shall be tagged or marked as identified in the delivery schedule or on submittals and complete packing lists and bills of material shall be included with each shipment.
6. Each piece of every item need not be marked separately, provided that all pieces of each item are packed or bundled together and the packages or bundles are properly tagged or marked.
7. The skid shall be properly marked for identification. Weight lift points or the center of gravity shall be marked on the crate(s) or skid to facilitate handling.

B. Product Storage and Handling Requirements for Manufacturing Facility:

1. Store and protect products in accordance with manufacturer's instructions.
2. Store with seals and labels intact and legible.
3. Store sensitive products in weathertight, climate-controlled enclosures in an environment favorable to product.
4. For exterior storage of fabricated products, place on sloped supports above ground.
5. Provide insured offsite storage and protection when Site does not permit onsite storage or protection. Evidence of insurance coverage shall be furnished with application for payment.
6. Cover products subject to deterioration with impervious sheet covering. Provide ventilation to prevent condensation and degradation of products. Provide temporary heat where required.
7. Provide equipment and personnel to store products by methods to prevent soiling, disfigurement, or damage.
8. Arrange storage of products to permit access for inspection. Periodically inspect to verify products are undamaged and are maintained in acceptable condition.
9. Protection of equipment and materials while under control of the Contractor shall be in accordance with manufacturer or Contractor's recommendations and shall include, but shall not be limited to, the following:
    a. Maintaining shop coatings in a prime condition.
    b. Protecting exposed machined surfaces with a suitable rust-preventative compound adequate for outdoor storage.
    c. Preventing rust and corrosion on all unpainted steel and metal surfaces not normally painted.
    d. Handling and storing plate, tubular products, formed shapes, and sheet-metal work to prevent permanent deformation or crimps in the material.
    e. Keeping openings in pipe, vessels, equipment, and machinery closed with adequate durable covers.
    f. For equipment requiring internal protection from moisture accumulation, maintain dry heat or suitable moisture-absorbing compound.
    g. Equipment and material stored outdoors shall be blocked up at least 6 inches above the ground and arranged for natural drainage with equipment drain connections open but protected.
    h. Protecting motors, electrical equipment, and machinery of all kinds against corrosion, moisture deterioration, mechanical injury, and accumulation of dirt or other foreign matter during storage and after installation. Protecting all bearings and gearboxes by factory grease packing or by lubricating oil.

1.08 SITE CONDITIONS

A. Refer to Section 01 61 00, Common Product Requirements, paragraph 1.03 Design Requirements.

PART 2 PRODUCTS

2.01 FUEL OIL FORWARDING PUMP SKID ASSEMBLY

A. Description:

1. This section includes the design, performance, fabrication, construction, testing, delivery, manufacturer's field services, and training requirements for the Fuel Oil Forwarding Pump Skid Assembly.
2. The pumps shall conform to all requirements of the ASME, and federal, state, and local requirements, including design, construction, testing, materials, and workmanship.
3. The Contractor shall provide proper code certification that all work performed by the manufacturer, or others responsible for the manufacturer, complies with all requirements of the code, including design construction, testing, materials, and workmanship of the Fuel Oil Forwarding Pump Skid.

B. Furnished by Contractor:

1. Furnish factory-assembled, Fuel Oil Forwarding Pump Skid assembly.
2. Contractor shall provide all equipment, materials, piping, valves, appurtenances, controls, wiring, instruments, accessories, and ancillary equipment required for a complete and fully functional Fuel Oil Forwarding Pump Skid assembly as specified herein and shown on the attached Piping and Instrument Diagram (P&ID) sketch M3-2, Rev 0 and One Line Diagram, E01-40, Rev 0. Scope of this package is shown inside boxes labeled "Fuel Oil Forwarding Pump Skid".
3. All materials shall be new and selected to perform as specified.
4. Contractor shall provide Drawings showing all interface requirements, including anchor bolts, foundation loads, foundation outlines, piping and electrical and instrumentation connections.
5. Contractor shall submit documentation pertaining to the performance of the system, including but not limited to performance curves.
6. Contractor shall furnish one complete set of all special tools, wrenches, and appliances necessary to install, maintain, and operate the equipment furnished under this Specification. Tools shall be furnished complete with a metal tool box. The Contractor shall provide a list of all special tools with document submittals.
7. Contractor shall be responsible for packaging and shipping. Technical assistance shall be offered for installation and field testing.

C. Furnished by Contractor:

1. The supply by Contractor shall include the following:
   a. Equipment support platform or foundation.
   b. Anchor bolts.
   c. Piping and wiring to connections.
   d. Receiving and installation of skids.
   e. Electrical power.
   f. Onsite storage of completed skid: Field inspection and testing.
   g. Startup and Commissioning
   h. Contractor's skid Supplier shall support startup and commissioning of skid.
   i. Field touch-up painting.

D. Materials and Welding:

1. All materials and components shall conform to the applicable codes and standards used in the construction of equipment of the type covered by this Specification. Pipes shall conform to the requirements of the piping specifications and attached piping data sheet. Valves shall conform to the valve specification and attached valve data sheets.
2. Materials shall be identified by reference to appropriate ASTM Specification, ANSI type number, etc. When no such designation is available, Contractor's or Contractor's Supplier's code or trade name may be used. In such cases Owner shall be identified and the chemical composition and significant physical properties of the material shall be presented in submittals and approved by Owner.
3. No copper bearing materials are permitted in the piping system or components in contact with fuel oil.
4. Materials shall be new and be selected by Contractor as the best commercially available to perform satisfactorily under the conditions specified herein.
5. No changes to the materials so listed shall be permitted after the contract award, without the approval of the Owner.
6. Welding and repair welding for valves shall be in accordance with the requirements of ASME B31.1 and B16.34.

E. Product Description: The equipment shall be mounted on a common base, or skid, as complete as possible, with all interconnecting wiring, tubing, and piping ready for operation after the Owner's external piping, tubing, and electrical connections are completed by the installing Contractor.

1. The fuel oil pump system shall be capable of pumping the specified flow of Ultra Low Sulphur (ULSD) fuel oil at the specified temperatures.
2. The pumps shall conform to all requirements of the ASME, and federal, state, and local requirements, including design, construction, testing, materials, and workmanship.

3. All equipment and materials for the fuel oil pump skid assembly shall be factory mounted on a common skid, as complete as possible, with all interconnecting wiring, tubing, and piping integral to the skid.
4. Skid framing shall be fabricated from standard carbon steel structural shapes and shall be primed and painted with an epoxy coating system. Provide mounting plates for anchoring to Owner furnished foundation. Touch-up paint shall be provided for repair painting of at least 10 percent of the skid surface area. Touch-up paint shall be the same manufacturer, type and color as shop applied material.
5. Design skid assembly so that all components are readily accessible for maintenance and inspection and so that any component may be removed without disturbing adjacent components.
6. Label all major components including pumps, tanks, instruments, valves and appurtenances supplied with permanent stainless steel tags. The assigned tag numbers, shown on P&ID, shall be indicated on all subsequent compliance submittals to identify all major system components.
7. Materials shall be suitable for the maximum operating pressures and maximum temperatures existing in each specific location. All parts subject to corrosive conditions shall also be made of materials especially suited to withstand such conditions.
8. All frame welds shall conform to requirements of AWS D1.1. All skid framing connections shall be fixed type connections.

F. Configuration:

1. The Skid shall be arranged such that the pumps and motors can be removed without dismantling other skid components.
2. Skid shall include, but not be limited to the following equipment:
    a. 2 by 100 percent fuel oil forwarding pumps.
    b. Strainers at each pump inlet.
    c. Piping.
    d. Valving.
    e. Pressure relief valves at each pump discharge with recirculation to pump suction.
    f. Control cabinet.
    g. Approved Manufacturers for Pump/Piping/Skid.
        1) Aether DBS.
        2) Accelerated Production Systems.
        3) Integrated Flow Solutions.
        4) Thermal and Mechanical Equipment Company.
        5) “Or-equal”, Owner approved.

G. Strainer:

1. Strainers shall be simplex basket strainer.
2. Contractor to size screen to protect downstream Fuel Oil Forwarding Pumps.
3. Differential pressure gauge/transmitter to be supplied.
4. Approved Manufacturers for Strainer:
   a. Mueller.
   b. Spirax Sarco.
   c. Leslie.
   d. Fabritech Industries.
   e. Keckley.
   f. “Or- Equal”, Owner approved.

H. Pumps:

1. Pumps shall be positive displacement, gear type for diesel fuel oil service.
2. Provide mechanical shaft seals that are integral with the pump, such that no external source of water is required.
3. Pumps shall be equipped with adjustable spacer coupling to permit replacement of the seal without motor removal.
4. Casing: Cast Iron, rated for a minimum of 125 psi working pressure with integral pressure relief valve.
5. Impeller/Rotor: Stainless steel gears.
6. Drive: Direct connected with flexible coupling.
7. Pump Accessories: Adjustable pressure control valve, bleed valve, mechanical seal.
8. Pumps shall be balanced so that peak to peak amplitude of rotor vibration in any plane measured at the pump bearing housing under design speed shall not exceed 1.5 mils (3 mils if 1,800 rpm pump speed) over the pump operating range.
9. Approved Manufacturers for Pumps:
   a. Roper.
   b. Viking Pump.
   c. SK Systems.
   d. Earthsafe Systems.
   e. Corken.
   f. IM&O.
   g. “Or-Equal”, Owner approved.
10. Approved Manufacturers for Mechanical Seals:
   a. Flowserve.
   b. John Crane.
   c. “Or-Equal”, Owner approved.

I. Motors:

1. Contractor shall provide one electric motor as the driver for each pump specified.
2. Motors shall be squirrel cage induction type rated 460 V, three-phase, 60-Hz with 1.15 service factor, Class F insulation and Class B rise, in accordance with NEMA MG-1.
3. Motors in corrosive environments shall be TEFC with corrosion-resistant materials and finishes per IEEE 841 (Chemical Duty). Motors located in hazardous areas (as defined in the NEC) shall have enclosures in accordance with NEMA MG 1-1.26. All other motors shall be totally enclosed fan cooled (TEFC).
4. Contractor shall be responsible for the selection of the motor characteristics, the motor mounting on the pump, and all accessories necessary to satisfy the requirements of the pumping unit in all operating modes.
5. Contractor shall select motors having torque characteristics suitable for the driven load. In sizing motors, no portion of a motor's service factor above 1.0 shall be used in continuous operation of the motor. Motors shall be sized to at least a 10 percent capacity margin above that of the rated horsepower requirement of the driven equipment.
6. Design, construction, and testing for all motors shall be in accordance with NEMA MG 1 unless otherwise specified herein.
7. Motors shall have a minimum power factor of 0.85.

J. Motor Starters:

1. Each motor shall be provided with a combination magnetic starter with overload relays, motor circuit protectors, and cover interlock.
2. Magnetic contactors shall be capable of closing when a minimum voltage of 80 percent of the normal voltage is applied to the closing coil or to the primary of the control transformers.
3. Circuit breakers shall be single-throw, with ambient compensated inverse time thermal and magnetic element overload protection and trip-free mechanism.
4. Circuit breakers for motor control circuits shall be single-throw, magnetic only type with adjustable instantaneous trip elements and trip-free mechanism.
5. Circuit breakers shall be in accordance with NEMA AB 1 and UL 489
6. Circuit breakers shall be of the molded case type rated for 50 degrees C ambient temperature.

K. The Contractor shall furnish the following piping accessories:

1. On Supply Piping for Each Pump:
   a. Simplex Basket Strainer:
      1) Flanged end.

2) Body: Cast Carbon Steel, ASTM A216 Grade WCB 150-lb class.
3) Strainer basket: Perforated Type 316 stainless steel, Standard basket with 100 mesh inner screen.
4) Cover retainer: Winged nuts.
5) O-Ring: Viton.
6) Provide tapped and plugged strainer drain port in basket retainer.
7) Strainer basket area shall have a ratio of free area to pipe size not less than 4 to 1 for pipe sizes up to and including 2-inch and 2-1/2 to 1 ratio for pipe sizes 2-1/2-inch and larger.
8) Include nipple and isolation valve on strainer drain port for each strainer.
9) Pressure differential indicator/transmitter. – 4-20 mA output with HART Protocol (Loop Powered from PLC); monitor strainer condition.

b. Pressure indicator transmitter:
1) 4-20 mA output with HART Protocol (Loop Powered from PLC).
2) Pressure monitoring and pump control.

c. Pump Isolation Valves.

2. On Discharge Piping for each Pump:
a. Pressure gauge.
b. Pressure indicator transmitter.
c. Pressure Relief Valves with recirculation to pump suction.
d. Check Valves:
1) API 602 approved swing check.
2) Welded end.
3) 150-lb class.
4) Bolted bonnet.
5) Full port.
6) Refer to piping specification HC01 for additional requirements.

3. Pump Isolation Valves on both suction and discharge piping

L. Piping:

1. Provide and install piping and piping specialties in accordance with ASME B31.1.
2. Piping shall be carbon steel, ASTM A106 Grade B, Seamless.
3. Piping shall be Class 150.
4. Piping 2 inches and smaller shall be schedule 80 minimum.
5. Piping to meet specification HC01.
6. Piping/Fittings 2 inches and smaller shall be socket welded. Piping/Fittings 2-1/2 inch and larger shall be butt welded construction.

7. Maximum velocity in discharge piping shall be 10 ft/sec. Maximum velocity in suction piping is 4 ft/sec.

M. Valving:

1. Manual Valves:
   a. Valves to be per Section 40 55 00, Power Plant Valves.
   b. Provide and install valves in accordance with ASME B31.1.
2. Relief Valves:
   a. See attached datasheet in paragraph 3.08 for material and performance requirements.
   b. The valves shall be designed for safe and reliable operation under the applicable service conditions.
   c. Valves shall be suitable for the intended application without undue strain, corrosion, deterioration, leakage, or other deficiencies.
   d. The valve class rating for steel shall be in accordance with ASME B16.34. The valve rating and materials shall be suitable for the design temperature at the design pressure, or valve set pressure plus accumulation, whichever is greater.
   e. All valve bodies shall conform to the requirements of ASME B16.34 for dimensions, material thickness, material specifications, and their respective pressure classes.
   f. Body designs shall be such that crevices and retention pockets are minimized. If the body design for valves larger than 1-1/2 inch inlet is such that liquid can collect on the discharge side of the disk, a socket weld drain connection or a plain end pipe nipple of not less than 1/2 inch nominal pipe size shall be provided at the lowest point liquid can collect.
   g. All valves shall be vertical standing with a 90 degree inlet/outlet, with a bonnet type as specified in the valve datasheet. All valves with ASME B16.5 flanges, and that comply with API STD 526, shall have bolted bonnets.
   h. Set point, blowdown, and accumulation shall be field adjustable after installation with valve under pressure. A locknut, cap, or other means shall be provided to prevent accidental changing of the setting.
   i. Each valve shall be sized using system design criteria and procedures established in Section VIII of the ASME B&PV Code and API 520, as stated on the data sheet.
   j. Valves shall have port and body flow areas adequate to pass the required capacity. Pressure accumulation shall not be greater than 10 percent of the valve set pressure or 3 psi, whichever is greater. Capacity ratings shall be certified in accordance with Section VIII of the ASME B&PV Code.

N. Control Enclosures and Cabinets:

1. Enclosure shall be NEMA 250 Type 4X, UL listed, with hinged door, grounding lug terminal strip and fusible control circuit transformer.
2. All control boards and cabinets used for mounting of devices shall be suitably reinforced structurally to limit vibration. Access doors, where applicable shall be provided with stiffening members to prevent warping
3. Hinged panels and access doors shall be provided with concealed hinges, have latches, and interchangeable locks. All doors shall be capable of making a minimum swing of 130 degrees from the closed position.
4. Control board and cabinet designs shall provide for the safe, neat, and accessible installation of wiring. Stiffener location, interior barriers, and arrangement of devices, terminal blocks and accessories shall assure clear functional layout and maximum accessibility for cable installation, maintenance, and inspection.
5. Structures shall be welded to the maximum extent possible to ensure rigidity during assembly, handling, shipping and installation. Welds, rivets and bolt heads shall not be visible from the outside. Floor mounted panels shall be furnished with removable lifting eyes at all corners.
6. Equipment and major devices such as instruments, relays, switches, indicating lamps, etc., shall be provided with a nameplate. Nameplates shall be engraved and shall be laminated phenolic or plastic material providing black letters on a white background, unless otherwise specified on Contract Drawings. Size of letters shall be approximately 3/16 inch for component nameplates and 3/4 inch for panel nameplates.
7. Interior-mounted devices shall be adequately identified inside equipment by nameplates, stenciled with a high-visibility paint, or suitably-inscribed fiber tags. Identification of interior devices shall be applied to the body of the device and not to its protective cover or associated wiring.
8. Terminal block assembly (when applicable) shall consist of:
    a. 2.5 feed through - https://www.phoenixcontact.com/en-us/products/feed-through-terminal-block-pt-25-3209510.
    b. 2.5 end cover - https://www.phoenixcontact.com/en-us/products/end-cover-d-st-25-3030417.
    c. 2.5 twin feed through - https://www.phoenixcontact.com/en-us/products/multi-conductor-terminal-block-pt-25-twin-3209549.
    d. 2.5 twin end cover - https://www.phoenixcontact.com/en-us/products/end-cover-d-st-25-twin-3030488.
    e. 2.5 knife disconnect - https://www.phoenixcontact.com/en-us/products/disconnect-terminal-block-pt-25-mt-3210156.
    f. 2.5 knife cover - https://www.phoenixcontact.com/en-us/products/end-cover-d-pt-25-mt-3211003.
    g. 2.5 Plug in bridge - https://www.phoenixcontact.com/en-us/products/jumper-fbs-50-5-3038930.

h. 4 24v fusable - https://www.phoenixcontact.com/en-us/products/fuse-terminal-block-pt-4-hesiled-24-5x20-3211903.
i. 4 250vac fusable - https://www.phoenixcontact.com/en-us/products/fuse-terminal-block-pt-4-hesila-250-5x20-3211907.
j. 4 end cover - https://www.phoenixcontact.com/en-us/products/end-cover-d-st-4-3030420.
k. 4 plug in bridge - https://www.phoenixcontact.com/en-us/products/jumper-fbs-20-6-3030365.

9. End clamp - https://www.phoenixcontact.com/en-us/products/end-block-clipfix-35-5-3022276Each enclosure shall include a copper ground bus. All metal parts of the control boards and cabinets shall be connected to the ground buses. Ground wires for connections between individual devices and the ground bus shall be insulated; individual ground connections shall be provided for each device.
10. Enclosures shall include humidistatically controlled space heater(s) and/or HVAC equipment as required to maintain humidity and temperature inside the enclosure within the operating range of all components under all ambient conditions. Power for heaters and/or HVAC devices shall be derived from 120V ac control power or the 480V source within the cabinet.

O. Instrumentation and Controls:

1. Control equipment shall conform to all applicable sections of NEMA ICS 1, UL 508, NFPA 70, and other applicable standards.
2. All control devices shall be heavy duty type and, when mounted on control panels, shall be of the oil-tight type.
3. Control Panel shall include the following components and features:
   a. Two door-interlocked disconnect switches, such that the cabinet can only be opened once both 480VAC sources have been disconnected.
   b. Two 480V-120V Control Power Transformers (CPTs), sized for the maximum control power load of both pumps and any auxiliary devices plus margin. One CPT shall be utilized as the normal power source. A changeover relay or other switching device shall be provided so that the control power loads can be fed from the other CPT in the event of loss of power on the primary feed.
   c. Three circuit breakers shall be provided in a Main Tie Main configuration to allow for operation of either pump from either power source. Breakers shall be operable from the front panel. Breakers shall be mechanically interlocked so that either the tie breaker is open and both mains are closed, or only one main and one tie is closed. Both mains and the tie shall not be closed simultaneously. Breakers shall include auxiliary contacts for status indication.
   d. Hand-Off-Auto' control switch for each starter.

e. Power on light, alarm lights, acknowledge button, test buttons, alarm horn.

4. Local control panels shall be furnished as a complete control system, including instrumentation and controls piped and wired to headers and terminal blocks. Pushbuttons and indicating lights shall be installed and wired on the control panel for start-up of all motors associated with driven equipment. Large free-standing upright panels shall be provided with internal light switch and 120 VAC duplex grounding type receptacle wired to a junction box to be fed from a separate external circuit.
5. Contractor shall furnish a Programmable Logic Controller (PLC); Manufacturer: Allen-Bradley, or Owner approved equal, with local panel HMI. For reference the balance of the existing PSS system is Allen-Bradley and the new system shall be compatible with seamless integration. The PLC shall be for local control as well as remote access/control and the Contractor shall implement local control and remote access/control with no additional cost to the owner nor additional contract time to achieve compatibility and full functionality with existing systems.
6. Interface with the BOP Control System shall be via fiber optic links, Modbus TCP/IP protocol. Redundancy of the Modbus TCP/IP link shall be provided. HMI graphics shall be made available for replication in the BOP Control System HMIs.
7. The PLC system shall include all power supplies, processors, input/output cards, I/O terminations, cabinet and human-machine interface hardware necessary for a complete operational system. The PLC system shall have the hardware configured to prevent the loss of functionality of the safety interlocks. Power supply loading shall not exceed 80 percent.
8. The PLC system shall be furnished with 10 percent spare, hardwired I/O and processor capabilities, needed to handle them. Spare hardwired I/O shall be made on an I/O card type basis. In addition to hardware spare I/O, the Contractor supplied control system shall be furnished with 10 percent spare I/O card slot capability. Spare card slot capability shall be based on total I/O cards furnished.
9. PLC system I/O card design shall assure that redundant or parallel service control loops are not terminated on the same I/O card (e.g., the pump output commands for pump A and pump B shall not be terminated on the same output card).

10. The PLC shall have the capability of being modified on-line and off-line. The Contractor shall provide PLC programming software, interface cards, and cables required to perform on-line and off-line configuration changes. System operating requirements shall be pre-defined in order to ensure PC compatibility with the software requirements. Software license shall be in the name of the Owner's Project Company to allow future upgrades.
11. In the automatic mode, the PLC system requires no operator intervention, and the PLC system shall automatically sequence through each step of the process. The only hold points would be system generated due to equipment malfunctions or process variable alarms requiring operator intervention.
12. The Contractor shall provide a complete Human-Machine Interface (HMI) system capable of all control and monitoring for manual and automatic system control. In manual, the operator shall have the capability to individually start/stop any system pump or modulate any system control valve. Transfer between the automatic and manual control shall be bumpless.
13. The PLC system shall provide all the functionality, necessary to control the equipment, as well as process alarms and trending capability. All alarms shall be time stamped and summarized in an alarm table. Points in alarm shall also be indicated on the individual process related graphics.
14. The Contractor shall configure the system using the latest revision of the software. It is the responsibility of the Contractor to supply any and all computer hardware or software in adequate quantities for operation and maintenance of the System. It is the Contractor's responsibility to furnish the additional software as necessary to furnish the System fully functional or for Contractor configuration and programming.
15. The Contractor shall perform a PLC system checkout and witnessed Factory Acceptance Test (FAT). The Contractor shall perform a PLC system checkout including 100 percent I/O checkout, closed loop simulation of binary/modulating logic, and validation of all logic, graphics, datalink communication and reports.
16. Instruments shall be located where they are readily accessible. Instruments, except for pressure gauges, thermocouples, and thermometers, shall be mounted on structural supports, brackets or panels, not on pipelines.
17. Analog signals from field instrumentation to the control systems shall be 4-20 mA dc signals. Instrumentation shall be loop powered from the control systems. Process switches shall be avoided unless required by Code. Transmitters are the preferred method of developing digital signals for alarms and interlocks. Direct mounted transmitters shall not be mounted in areas subject to vibration.

18. Transmitters shall be used to provide the required 4 to 20 mA dc signals for all controllers and receivers. Transmitters shall be of the electronic, HART Smart, two-wire type (or equal), capable of driving a load up to 750 ohm at 24 V dc, and shall be powered from the control system I/O cards. Transmitters shall be individually fused (or current limited) such that a shorted transmitter shall not cause other transmitters on the same I/O module to fail.
19. Pressure, flow, differential pressure, level, temperature, and other miscellaneous transmitters' accuracy shall be within 0.1 percent of calibrated span. All transmitters shall be installed with isolation valves, manifolds, etc. as needed to remove transmitters from service and calibrate.
20. All instrumentation mounted outdoors, exposed to the elements, shall be as a minimum NEMA 4X construction, unless it is enclosed in a heated instrument enclosure or the specific area classification is hazardous. If the instrument is mounted in a heated instrument enclosure the instrument shall be as a minimum NEMA 4 construction. If the area classification is hazardous, an explosion proof enclosure is required.

P. Control Sequence:

1. Operate pumps automatically based on day tank level setpoint.
2. Operate pumps locally at the pump skid or operate pumps from a remote location when placed in remote.
3. Fuel Oil Forwarding Pump Skid pumps and Fuel Oil Return Pump Skid pumps shall be interlocked in the BOP PLC so that they cannot be run simultaneously.

Q. Performance:

1. The Contractor shall guarantee that the performance of each fuel oil pump shall be as scheduled when operating under the conditions described herein.
2. Flow: 106 gpm, at 115 feet total developed head.
3. Discharge Pressure: 45 psig.
4. Suction Head: 21.0 feet.
5. Contractor shall provide NPSHr
6. Suction Fluid Temperature: 60 degrees F.
7. NPSH Available: 20.9 feet.
    a. Assumptions:
        1) Tank minimum liquid levels are 2 feet above the suction inlets.
        2) Pump suction inlet is located approximately 8 feet above the tank bottom TOC.
        3) Atmospheric pressure is 14.70 psia.
        4) 20 percent margin on piping friction losses.

8. Pump speed, max: By Contractor, or Contractor's Supplier.
9. Pump efficiency, min: 70 percent.
10. Design temperature: 120 degrees F.
11. Design pressure, suction/discharge: 150 psig, minimum.
12. Pump shall be mechanically balanced statically and dynamically for all speeds.
13. Pump shall be hydraulically balanced both axially and radially at all outputs.
14. Pumps shall be suitable for daily plant cycling.
15. Pump shall be suitable for the pump design conditions at any fluid flow from minimum flow to 120 percent of design flow.
16. Total developed head of pumps shall be as follows:
    a. Maximum at zero flow.
    b. Continuously decreasing from zero flow to runout.
17. Pump shutoff head shall be as follows:
    a. More than 115 percent of design point head.
    b. Less than 130 percent of design point head.
18. The first critical speed of the pump motor and line shaft shall be less than 75 percent or 125 percent greater than the operating speed.
19. Free of flashing and cavitation at all discharge rates from minimum flow to 120 percent of design delivery at the suction conditions given in the pump design conditions.
20. Pumps and motors shall be designed so they shall not be damaged or suffer a change in operating clearances from reverse rotation caused by the failure of a pump discharge check valve.
21. Pump design working pressure shall not be less than the sum of the pump shutoff head and the maximum suction head and shall apply to the design of the complete outer casing and all discharge pipe connections on the casing.
22. Pump shall be mechanically balanced statically and dynamically for all speeds.
23. Pumps shall be hydraulically balanced both axially and radially at all outputs.
24. Pumps shall be suitable for daily plant cycling.
25. The sound level for each pump and regulator shall be guaranteed not to exceed 85 dBA when installed in a free field, measured at points spaced 6 feet apart around the assembly, at a distance of 3 feet from the package and a height of 3 feet, using the "A" scale with a meter that conforms to ANSI S1.4.

R. Surface Coatings:

1. Any surfaces that are not to be insulated or galvanized shall be prime coated and finish painted by the Contractor prior to the shipment using Contractor's or Contractor's Supplier's standard coating system, appropriate for the described service. Coating system shall be provided with a minimum 5-year warranty against manufacturer or application defects.

2. Finish coat color selection(s) shall be approved by Owner.
3. Surface Preparation: All surfaces shall be prepared to a surface cleanliness and anchor pattern recommended by the coating manufacturer prior to application of coatings.
4. All coatings shall be applied to dry film thickness recommended by the manufacturer unless otherwise specified.
5. Exterior: All exterior surfaces shall be prepared and primed in accordance with fabricator's standard coating system.
6. All shop-coated surfaces damaged during construction shall be repaired as required to ensure adequate repair.

S. Electrical Characteristics and Components:

1. Contractor shall be responsible for the selection of the motor characteristics, coupling the motor to the driven equipment, and all accessories necessary to satisfy the requirements of the driven equipment, and the electric motor in all operating modes.
2. To power the skid assembly, the Owner shall furnish:
   a. Two 30 Amp, 480 volts, three-phase, 60-Hz feeds. One pump motor shall be fed from each feed.
3. Disconnect Switch: Door-interlocked, factory mount disconnect switches in control panel.

T. Skid-Mounted Wiring:

1. Wire all control and instrument devices installed on skid-mounted equipment (solenoid valves, pressure switches, meter switches, etc.) to terminal strips in one terminal box/control panel located on the skid.
2. Install all wiring between devices and the terminal boxes in aluminum conduit. PVC-jacketed, liquid-tight, flexible aluminum conduit shall be installed in lengths no greater than 18 inches adjacent to devices and where flexibility is required; all other conduit shall be rigid.

3. All wiring shall be tinned stranded copper with 90 degrees C and 600-volt insulation rated XHHW-2 with a flame retardant jacket. Panel wiring shall be NEC Type SIS.
4. All low level instrumentation wiring shall be 600V shielded twisted pairs, triplets or quads with aluminum backed mylar tape, a flame retardant jacket and a No. 18 AWG drain wire.
5. All cables shall meet the flame retardant requirements of IEEE 1202. Single conductors shall pass the UL VW-1 flame test.

2.02 SKID ASSEMBLY

A. A welded steel skid shall be provided to be installed on a concrete base. The skid shall support the pumps, motors, piping, and accessories and shall have provisions for anchorage to the concrete base. Skid shall be designed to adequately support the equipment under all conditions. All structural joints shall be fully welded. Mounting holes for anchoring the skid to the foundation shall be provided.

B. Guards shall be provided for protection of personnel from all exposed moving and/or rotating machine elements.

C. Provision shall be made for lifting the skid. The skids shall be provided with lifting lugs (eye bolts) to permit lifting and transport by a crane. The center of gravity location shall be designated on the skid and general arrangement drawing.

PART 3 EXECUTION

3.01 FABRICATION AND MANUFACTURING REQUIREMENTS

A. Each piece of equipment furnished shall be shop assembled and skid mounted to the greatest extent practical. All control tubing provided shall be supported with Unistrut or similar material. Contractor or Contractor's Supplier shall shop assemble all wiring and controls to the greatest extent practical. All conduits shall be of the rigid type of Seal-Tite flexible, and sized in accordance with NEC standards. All bolts shall be drilled. Bolt holes manufactured by burning are not acceptable.

B. All equipment and auxiliary systems shall be mounted on a steel baseplate. Each baseplate shall support the equipment and auxiliaries and be provided with pads for anchoring the unit to a concrete foundation. Baseplates for equipment subject to water or oil leakage shall be equipped with a drain connection.

3.02 INSTALLATION – PUMPS

A. Provide pumps to operate at specified system fluid temperatures without vapor binding and cavitation, are non-overloading in parallel or individual operation, and operate within 25 percent of midpoint of published maximum efficiency curve.

B. Install long radius reducing elbows or reducers between pump and piping. Support piping adjacent to pump so no weight is carried on pump casings. For close coupled or base mounted pumps, install supports under elbows on pump suction and discharge line sizes 4 inches and over.

C. Install pumps on vibration isolators.

D. Install flexible connectors at or near pumps where piping configuration does not absorb vibration.

E. Install piping accessories with pressure gauges furnished loose with pump package.

F. Check, align, and certify alignment of base mounted pumps prior to startup.

G. Lubricate pumps before startup.

3.03 QUALITY CONTROL

A. FACTORY TESTING

1. To the greatest extent possible, the Contractor shall test all components prior to shipment to minimize delays during installation and startup. Testing shall consist of the following.
2. The Contractor shall test the equipment furnished under this Specification at the Contractor's or Contractor's Supplier's shop prior to shipment. Factory tests and inspections shall demonstrate the performance, quality, accuracy and workmanship characteristics. A complete description of the proposed factory tests, including hydrotest, shall be submitted for Owner review.
3. Pump casings shall be hydrostatically tested to 150 percent of design pressure in the shop per code requirements. Witnessing by Owner is not required; however, signed records and hydrotest charts shall be required prior to shipment. Hydrostatic testing shall be performed using demineralized water. No hydrostatic test shall be performed when ambient temperature and water temperature is lower than 60 degrees F.
4. Shop performance testing of each pump and motor assembly shall be completed to verify conformance with performance guarantees prior to shipment. Contractor shall notify the Owner a minimum of two weeks prior to the test date(s) to allow the option of observing, however, holding for witnessing is not required. Testing shall verify the following as a minimum:
    a. Capacity.
    b. Head.
    c. Efficiency.
    d. Brake Horsepower.
    e. NPSHr.
5. Testing shall be performed at shutoff, minimum flow, design flow, maximum flow, and at least five equally spaced points between minimum and design flow points. Certified test curves and data shall be submitted to the Owner and approved prior to shipment.
6. Skids shall be pressure tested to verify all piping and appurtenances are free of leaks.

7. For Relief Valves, in addition to Contractor's, or Contractor's Supplier's standard shop tests and inspections, the following shall be performed:
    a. A hydrostatic test on the body and seat of each steel valve shall be performed in accordance with ASME B16.34 and MSS SP-61.
    b. Capacity certification tests in accordance with ASME B&PV Code Section VIII.
    c. Certified copies of test reports covering all shop tests shall be prepared.
8. Certified material test reports for pressure retaining materials shall be provided in accordance with the ASTM specifications and shall include actual mechanical and chemical properties.
9. Motor testing shall be completed in accordance with applicable codes and the manufacturer's recommendations prior to shipment.
10. Factory test witnessing by Owner may or may not be required; however, signed test records shall be required prior to shipment.

B. PERFORMANCE TESTING

1. The Contractor shall be required to demonstrate, by testing of the completed equipment skid while in operation, its ability to meet the specified performance requirements. These performance tests shall be conducted in order to meet the performance noted in 2.1.Q. The method of testing shall be in accordance with ASME Power Test Codes, or modification thereof, as mutually agreed upon between the Contractor and the Owner.
2. Contractor shall provide all temporary test equipment required.

3.04 COMMISSIONING, STARTUP SUPERVISION, AND SITE ACCEPTANCE TESTING (SAT)

A. Contractor shall engage a factory authorized service representative to perform start-up service.

B. Initial Power-Up and Functional Verification: Upon completion of system installation at the Project Site the Contractor shall complete installation and start up checks in accordance with the manufacturer's requirements including verification of allowable nozzle loads, clean suction strainers, bearing lubrication, free rotation of pump and rotation in the correct direction.

C. Communication and Operation Verification: After the system is installed at the Project Site and made operational, the Contractor shall exercise all hardware, communication links, software, and configuration programs to ensure proper operation and prove compliance with the Specifications. The Owner's personnel shall use the system during startup, checkout, and initial operation of plant systems.

D. The Contractor shall supply all special tools or special equipment for erection, commissioning, and SAT of the Work.

E. Contractor shall submit an SAT procedure 30 days in advance of the SAT for review and approval. Approved Test Plan is a prerequisite to conducting SAT.

F. Any deficiencies or faulty conditions determined during these tests shall be promptly corrected by Contractor at no cost to Owner. The field running tests shall be performed again, at the Contractor's expense, to confirm satisfactory operation.

G. Final Acceptance cannot be given until all equipment is operating safely and satisfactorily, all system functions operational from the remote and local HMIs, and all punch list items are resolved to Owner's satisfaction. Successful demonstration that the control system is satisfactorily operating system equipment and related balance of plant equipment.

3.05 TRAINING

A. Contractor shall engage a factory authorized service representative to train the Owner's operations and maintenance personnel to adjust, operate and maintain the pumps.

B. Provide training so that the Owner can operate, maintain, and repair the complete system. Owner personnel will include Operators, Maintenance, and Engineering.

C. Provide competent, factory authorized personnel to provide instruction to O&M personnel. Include sufficient hours of training to provide complete training for operation and maintenance of the equipment and system.

D. Provide the name and resume of proposed instructor; instructor shall have at least 5 years of experience as an instructor, with 3 years of experience teaching the designated course. Instructor's primary language shall be English.

E. Owner reserves right to reject proposed instructor. Owner reserves right to have the Integrator repeat portions of the training (at Integrator's expense) if Owner feels training was inadequate.

F. Provide training manual that includes, as a minimum, the following:

1. Course objective.
2. Course outline.
3. Theory of operation.

3.06 SPARE PARTS

A. Spare parts and special tools required for one year of operation shall be provided per manufacturer's recommendations. Contractor shall submit list of these spare parts and special tools.

B. Spare parts and special tools for construction, commissioning and startup shall be included. Any such parts used during construction or startup shall be replaced.

C. Spare parts and special tools are to be packaged separately from the equipment and shipped along with the equipment. A tag shall be attached to each part showing equipment tag number, part name or description and Drawing reference and part item number.

D. All spare parts and special tools shall be supplied new and unused.

E. Contractor shall submit a list of recommended spare parts for long-term, reliable operation including pricing. Pricing shall be valid until Project closeout and acceptance.

3.07 O&M MANUALS

A. General: Provide the following:

1. Suggested startup procedures.
2. Suggested operational procedures.
3. Suggested routine and preventative maintenance activities and schedule.
4. Training material.
5. Alarm summaries.

B. Contractor shall deliver three-(3) hard copies and one-(1) digital copy of the O&M Manual.

3.08 PROTECTION

A. Protect equipment from construction or accidental damage during the installation period prior to system testing and turnover to the Owner.

3.09 DELIVERY

A. Preparation for Shipping:

1. Contractor shall submit procedures for the cleaning, preservation, packaging, handling, lifting, shipping, and storage of the material and equipment provided under this order.
2. Once the system passes all tests, drain the system. Protect equipment from damage due to freezing conditions, if shipment is to occur during cold weather.
3. Prevent corrosion or damage of the equipment while it is in transit to the job site and during storage.

4. Clean flanges and pipe connections and treat metal connections with anti-corrosion compound after assembly and testing.
5. Touch up any nicks or scratches in paints or coatings using the same paints or coatings that were originally applied.
6. Protect flanges, pipe openings, other openings, and connections with wooden flange covers or with screwed-in plugs. Seal all openings.
7. Protect bearings and couplings against damage from sand, grit, and other foreign matter.
8. Wrap skids with durable plastic that is suitable for the proposed delivery method.
9. All shipments shall be packaged to remain undamaged during shipping and during a minimum outdoor storage of six months after arrival on Site.
10. Keep skid dry and protected from the weather.
11. Coordinate delivery date and time with Owner. Obtain Owner's approval of delivery date and time prior to shipment.
12. Insurance during shipment shall be the responsibility of the Contractor.
13. Any damage that occurs during shipment shall be repaired or fixed by the Contractor to the satisfaction of Owner.

3.10 PUMP DATASHEET

A. The intent of this Specification is to utilize Contractor's or Contractor's Supplier's standard equipment design where possible. The provided data indicates minimum requirements by Contractor. All data shall be included in Contractor's documentation.

	Performance Requirement	**By Contractor**
Pump Tag Number(s)	00-FO-PMP-001A; 00-FO-PMP-001B	
Quantity of Pumps	2	
Model Number		
Capacity (gpm)	106	
Head (ft)	115 TDH	
Shut of Head (ft)		
Temperature (°F)	60	
Efficiency (%)	Min. 70%	
Power (HP)		
Speed (rpm)		
NPSHA (ft)	20	
NPSHR (ft)		

	Performance Requirement	By Contractor
Pump Minimum Flow (gpm and head)		
Materials of Construction		
Casing	Cast Iron A823	
Impeller/Rotor	Stainless Steel	
Shaft	Heat treated steel ASTM A32	
Gears	Heat Treated Steel	
Wear Rings		
Type of Bearings	Anti friction needle bearings	
Type of Shaft Seals		
Type of Couplings		
Coupling Guard	Dual rated; ANSI B15.1, Section 8; OSHA 1910.219 approved; steel; removable; attached to mounting frame	
Drive	Magnetic, sealless	
Skid Dimensions		
Size of Connections – Suction / Discharge		
Weight		
Pump / Motor (lbs)		
Complete Skid (lbs)		
Complete Skid dimension (ft-in)		
Motor Manufacturer		
Motor Rating		
Voltage		

3.11 PIPING SPECIFICATION

A. See 40.50.20 Attachment 1, Pipe Specification Tables

3.12 VALVE SPECIFICATIONS

A. See 40.50.20 Attachment 1, Pipe Specification Tables.

3.13 RELIEF VALVE DATASHEET

GENERAL	1	Tag number(s)		PRV101, PRV102	
	2	Service		Fuel Oil	
	3	Line number / vessel tag number		00-3”-FO-004-HC01-N, 00-3”-FO-003-HC01-N	
	4	Full / semi nozzle		Full	
	5	Safety or relief		Relief	
	6	Conv., bellows, pilot op.		Conventional	
	7	Bonnet type		Bolted Bonnet	
CONN.	8	Size: Inlet	Size: Outlet	__", 150# Class	__", 150# Class
	9	Flanged / screwed / SW / BW		Flanged	
	10	Type of flange face		RF	
MATERIALS	11	Body and bonnet		Carbon Steel ASTM A216 Gr. WCB	
	12	Seat and disc		Resilient seat - BUNA-N O-Ring	
	13	Resilient seat seal		BUNA-N Nitrile Rubber	
	14	Guide and rings		316 Stainless Steel	
	15	Spring		316 Stainless Steel	
	16	Bellows		N/A	
	17	Gaskets		Flexitallic Style Spiral-Wound Stainless Steel (See Piping Spec. HC01)	
OPTIONS	18	Cap: Screwed or bolted		Screwed	
	19	Lever: Plain or packed		_____	
	20	Test rod		_____	
	21				
	22				
	23				
BASIS	24	Design code		ASME Section VIII	
	25	Sizing standard		API 520	
	26	Fire		API 6FA Fire Safe	
	27				
FLUID DATA	28	Fluid and state		Ultra Low Sulphur Diesel, liquid	

	29	Required capacity		Full Pump Capacity			
	30	Mol. Wt.	Operating SG	_____	0.8471		
	31	Oper. press.	Set. press.	30 - _50 psig	85 psig		
	32	Oper. temp.	Relief temp.	60°F - 90 °F	Ambient °F		
	33	Design temperature		120 °F			
	34	Back pressure: Constant		Atmospheric (14.7 psia)			
	35	Back pressure: Variable		up to 7 psi (suction pressure dependent on tank level)			
	36	Back pressure: Total		Up to 21.7 psia			
	37	% allowable overpressure		10%			
	38	Compressibility factor					
	39	Ratio of specific heats					
	40	Barometric pressure		29.88 inHg			
	41						
	42						
	43						
	44						
	5						
	46	Calc. area		_____ sq. in.			
	47	Selected area		_____ sq. in.			
	48	Orifice designation					
	49	Manufacturer					
	50	Model no.					
NOTES:							
1)							

3.14 SCHEDULE FOR SUBMISSION OF DRAWINGS AND DATA – THE FOLLOWING SUBMITTAL LIST SHALL BE POPULATED WITH WARO (WEEKS AFTER RECEIPT OF ORDER) SUBMITTAL DATES AND SUBMITTED BY THE CONTRACTOR WITHIN TWO WEEKS OF NOTICE TO PROCEED.

	Information Required	
	Certified After Order	**WARO***
GENERAL DATA REQUIREMENTS		
Overall Scope of Supply & Equipment Description	X	
Submittal/Shop Drawing List & Schedule	X	
Schedule for Engineering, Fabrication, & Delivery	X	
Experience & Reference List		
Listing of all Sub-Suppliers and Subcontractors		
Description of Training Program Included		
Training Videos (DVD's)		
Description of Site Support Included		
Completed Performance Data Sheets and Guarantees	X	
Shipping Details & Weights	X	
Equipment Lifting & Rigging Drawings & Details	X	
Description of Noise Mitigation Provisions	X	
Shop Testing Procedures	X	
Field Testing Procedures		
Description of QA/QC Program		
Spare Parts List with Pricing		
Special Tools List		
Trim List		
General Arrangement Plans & Elevations	X	
Code Reports & Certifications	X	
Operation and Maintenance (O&M) Manuals	X	
MECHANICAL DATA REQUIREMENTS		
Process Flow Diagrams (PFD's)	X	
3D CAD Model(s) - Equipment & Piping	X	
Dimensional Layout Drawings	X	
Piping Drawings with Connection/Interface Tables	X	
Permissible Nozzle Loading	X	
Expected Thermal Movements - Equipment	X	
Expected Thermal Movements - Connection Interface Points	X	
Vendor-Furnished Pipe Support Details		
Clearance Requirements for Maintenance	X	
Equipment Design Details & Materials of Construction	X	
Equipment Data Sheets	X	
Bills of Material (BOM's)	X	
Weld Procedures & Welder Qualifications		
Performance Curves	X	
Performance Correction Curves		
Accessory Descriptions	X	
Utility Requirements (air, water, lube oil, etc.)	X	
Certified Material Test Reports (MTR's)	X	
Equipment Nameplate Facsimile		

	Information Required	
	Certified After Order	**WARO***
ELECTRICAL DATA REQUIREMENTS		
Motor List & Power Requirements	X	
DC System Load Requirements		
Accessory Descriptions	X	
Motor Data Sheets	X	
Motor Performance Curves	X	
One Line Diagrams		
Three Line Diagrams		
Connection/Interconnection Diagrams	X	
Schematics	X	
Wiring Diagrams	X	
Mounting Details	X	
Grounding Details	X	
Cable List	X	
Certified Test Reports	X	
Electrical Cabinet Dimensional Drawings	X	
Conduit Entrance Locations/Plan Drawings	X	
Bills of Materials (BOM's)	X	
INSTRUMENTATION & CONTROLS DATA REQUIREMENTS		
Piping & Instrumentation Diagrams (P&ID's)	X	
Control System PLC Description		
Control System Architecture Diagram		
Control Cabinet Dimensional Drawings		
Junction Box Dimensional Drawings	X	
SAMA / ISA (Analog) & Discrete Logic Diagrams		
Interconnection Diagrams	X	
Point-to-Point Wiring Diagrams	X	
Termination Diagrams	X	
Control Loop Diagrams		
Control System Power Requirements		
Cable List	X	
Instrument List (w/Process Ranges & Set Points)	X	
Instrument Installation Details / Dwgs	X	
Control Valve List		
Input/Output (I/O) Signal List - in EXCEL format file		
Alarm List with Setpoints - in EXCEL format file		
Component / Equipment List	X	
Instrument Data Sheets (ISA S-20)	X	
Control Valve Data Sheets (ISA S-20)	X	
Calibration Records for all Vendor-Furnished Instruments	X	
Graphical Display Screens (Screen Shots)		
Graphical Display Screens - Paging Architecture		
Engineering and Configuration Instructions		
Control System Test Plan(s) - FAT, CAT, Startup		
Control System Test Reports		
HMI Tagname Database - exported in EXCEL format file		
PLC Tagname Database - exported in EXCEL format file		
Modbus Registry/Map for integration of PLC data into Plant Control System		
HMI Appication(s) (CD or similar media software file) - min. 3 licenses		
PLC Application(s) (CD or silmilar media software file) - min. 3 licenses		

	Information Required	
	Certified After Order	WARO*
CIVIL/STRUCTURAL DATA REQUIREMENTS		
Code Calculations		
Structural Steel Plans & Elevations	X	
Platform, Ladder, & Stair Drawings		
Equipment Enclosure Drawings & Details		
Foundation Loading Diagram (Static & Dynamic)	X	
Permissible and Guaranteed Equipment Vibration Levels - 50%, 75%, and 100% Load Points	X	
Location, Size, and Projection of Anchor Bolts, Sleeves, and/or Imbeds	X	
Equipment Weights (dry and operating)	X	
Field Erection Drawings & Details	X	
Equipment Grouting Requirements and/or Recommendations	X	

3.15 VALVE LIST

POWER ENGINEERS

Revision: B
Issued for Bid 1444
Date: 17DEC25
By: M. Stallings

174602 SWBNO Valve List

Rev	CN	P&ID	Unit	Service	Valve Number	Size	PEI Spec	AG/UG	Line Number	Material	Design P	Design T	Op. P	Op. T	Notes
	1444	M3-2	00	FO	004	1"	Ball	AG	00-3"-FO-001-HC01-N	per piping spec	100	100	45	Ambient	on pump skid
	1444	M3-2	00	FO	011	3"	Ball	AG	00-3"-FO-001-HC01-N	per piping spec	100	100	45	Ambient	on pump skid
	1444	M3-2	00	FO	012	3"	Ball	AG	00-3"-FO-001-HC01-N	per piping spec	100	100	45	Ambient	on pump skid
	1444	M3-2	00	FO	018	3/4"	Ball	AG	00-3"-FO-001-HC01-N	per piping spec	100	100	45	Ambient	on pump skid
	1444	M3-2	00	FO	019	3/4"	Ball	AG	00-3"-FO-001-HC01-N	per piping spec	100	100	45	Ambient	on pump skid
	1444	M3-2	00	FO	020	3/4"	Ball	AG	00-3"-FO-001-HC01-N	per piping spec	100	100	45	Ambient	on pump skid
	1444	M3-2	00	FO	023	3/4"	Ball	AG	00-3"-FO-002-HC01-N	per piping spec	100	100	45	Ambient	on pump skid
	1444	M3-2	00	FO	029	3"	Ball	AG	00-3"-FO-002-HC01-N	per piping spec	100	100	45	Ambient	on pump skid
	1444	M3-2	00	FO	030	1"	Ball	AG	00-3"-FO-002-HC01-N	per piping spec	100	100	45	Ambient	on pump skid
	1444	M3-2	00	FO	015	3"	Ball	AG	00-3"-FO-002-HC01-N	per piping spec	100	100	45	Ambient	on pump skid
	1444	M3-2	00	FO	024	3/4"	Ball	AG	00-3"-FO-002-HC01-N	per piping spec	100	100	45	Ambient	on pump skid
	1444	M3-2	00	FO	025	3/4"	Ball	AG	00-3"-FO-002-HC01-N	per piping spec	100	100	45	Ambient	on pump skid
	1444	M3-2	00	FO	026	3/4"	Ball	AG	00-3"-FO-003-HC01-N	per piping spec	100	100	45	Ambient	on pump skid
	1444	M3-2	00	FO	027	3/4"	Ball	AG	00-3"-FO-003-HC01-N	per piping spec	100	100	45	Ambient	on pump skid
	1444	M3-2	00	FO	016	3"	Check	AG	00-3"-FO-003-HC01-N	per piping spec	100	100	45	Ambient	on pump skid
	1444	M3-2	00	FO	033	3"	Ball	AG	00-3"-FO-003-HC01-N	per piping spec	100	100	45	Ambient	on pump skid
	1444	M3-2	00	FO	034	1"	Ball	AG	00-3"-FO-003-HC01-N	per piping spec	100	100	45	Ambient	on pump skid
	1444	M3-2	00	FO	017	3"	Ball	AG	00-3"-FO-003-HC01-N	per piping spec	100	100	45	Ambient	on pump skid
	1444	M3-2	00	FO	021	3/4"	Ball	AG	00-3"-FO-004-HC01-N	per piping spec	100	100	45	Ambient	on pump skid
	1444	M3-2	00	FO	022	3/4"	Ball	AG	00-3"-FO-004-HC01-N	per piping spec	100	100	45	Ambient	on pump skid
	1444	M3-2	00	FO	014	3"	Ball	AG	00-3"-FO-004-HC01-N	per piping spec	100	100	45	Ambient	on pump skid
	1444	M3-2	00	FO	031	3"	Ball	AG	00-3"-FO-004-HC01-N	per piping spec	100	100	45	Ambient	on pump skid
	1444	M3-2	00	FO	032	1"	Ball	AG	00-3"-FO-004-HC01-N	per piping spec	100	100	45	Ambient	on pump skid
	1444	M3-2	00	FO	013	3"	Check	AG	00-3"-FO-004-HC01-N	per piping spec	100	100	45	Ambient	on pump skid
	1444	M3-2	00	FO	009	3"	Ball	AG	00-3"-FO-010-HC01-N	per piping spec	100	100	45	Ambient	

END OF SECTION

INTENTIONALLY LEFT BLANK

SECTION 25 05 11
CYBERSECURITY FOR FACILITY-RELATED CONTROL SYSTEMS

PART 1 GENERAL

1.01 RISK MANAGEMENT FRAMEWORK

A. The Sewerage & Water Board New Orleans (SWBNO) operates significant, critical water and wastewater infrastructure and is committed to fostering a holistic and galvanized cyber security environment. This is being achieved through the diligence of key stakeholders and the application of new standards and frameworks to safeguard critical control systems and information assets owned and operated by or on behalf of SWBNO. To address the unknowns, and to inform upon the level of protection required to safeguard its assets, SWBNO is committed to understanding the true and perceived risk threatening its critical control systems as well as the potential implications should any perceived risk become reality.

B. In response to the heightened state of threat awareness surrounding critical infrastructure, given the significant rise of cyber-attacks threatening water and wastewater utilities across the country, SWBNO seeks to formalize its approach to securing supervisory control systems utilizing reputable standards and frameworks from the National Institute of Standards and Technology (NIST). The NIST Risk Management Framework (RMF), as defined by the Special Publication 800-37 Standard, provides holistic means to quantify the response to risk from a cyber security perspective, and align countermeasures required to effectively reduce, transfer, or remove risk to key systems and critical assets across the industrial control system network (ICS).



Figure 1: NIST Risk Management Framework (RMF)

A. Subsequent Cyber Security specifications are aligned to Phase 3 of the RMF - Select Controls - in order to provide guidance on how unique device types shall be properly configured and secured prior to integration onto an ICS network and communication with live/production supervisory control system assets.

1.02 CYBER SECURITY SPECIFICATIONS

A. Operator Interface Terminals (OITs):

1. Relevant NIST 800-82 Rev 2 Controls:
   a. CONTROL TITLE / DESCRIPTION
      1) PE-3 PHYSICAL ACCESS CONTROL
      2) PE-6 MONITORING PHYSICAL ACCESS
      3) RA-5 VULNERABILITY SCANNING
      4) AC-2 ACCOUNT MANAGEMENT
      5) AC-6 LEAST PRIVILEGE

2. Specifications:
    a. All OIT's shall be mounted externally to control panels/MCC/PLC Cabinets within the production environment which are locked and physically secured.
    b. All ethernet and USB ports shall be physically inaccessible from the outside of the enclosure.
    c. Physical access to USB ports used to upload/download configuration files, applications and firmware shall be highly restricted to a privileged group of engineering personnel only.
    d. OIT's shall be assessed for software vulnerabilities daily and patched immediately should any Common Vulnerability or Exposure (CVE) be detected.
    e. Default account credentials shall be changed and/or disabled prior to installation.
    f. OIT's shall require a unique user login when making changes to process setpoints.
    g. Unique logins shall be administered from a centralized repository whereby credentials and permissions remain consistent across the supervisory control system.
    h. User accounts shall provide limited privileged access to the OIT to fulfill the requirements of roles/responsibilities only.
    i. Administrative access to the OIT shall be highly restricted to authorized users only – separate and unique Admin Accounts shall be created and used to make changes to the programs and firmware only.
    j. Administrative accounts shall not be provided to, or used by operators, to log into OIT's to make changes.
    k. OIT's may present a view/read only status screen depicting the process area that does not require a login.
    l. OITs shall have the system clock synchronized with a GPS and/or NTP time source.

B. Operator Workstations:

1. Relevant NIST 800-82 Rev 2 Controls:
    a. CONTROL TITLE / DESCRIPTION
        1) RA-5 VULNERABILITY SCANNING
        2) AC-2 ACCOUNT MANAGEMENT
        3) AC-7 UNSUCCESSFUL LOGIN ATTEMPTS
        4) AC-6 LEAST PRIVILEGE
        5) AC-11 SESSION LOCK
        6) AU-10 NON-REPUDIATION

2. Specifications:
    a. Operator Workstations shall be assessed for software vulnerabilities daily and patched immediately should any Common Vulnerability or Exposure (CVE) be detected.
    b. Operator workstations shall be connected to a centralized domain to ensure account management, permissions, access control and policy enforcement are applied consistently across all stations.
    c. Operators shall use a unique account to login to the workstation and HMI software.
    d. Operator user accounts shall provide limited privileged access to the workstation to fulfill the requirements of roles/responsibilities only.
    e. The local administrative account shall be disabled.
    f. Disable Microsoft Office macros or similar embedded code.
    g. The system shall lockdown after three concurrent unsuccessful login attempts (regardless of input delay) with notifications sent to incident responders requiring immediate investigation.
    h. Administrative access to the workstation / domain shall be highly restricted to authorized users only – separate and unique Admin Accounts shall be created.
    i. Administrative accounts shall not be provided to, or used by operators, to log into workstations.
    j. The HMI software shall be connected to the centralized domain account repository.
    k. The HMI software shall log all user actions - logs/records shall be kept for no less than 90 days.
    l. Security logs shall be protected from tampering and unauthorized access.
    m. The workstation shall automatically lock after more than 30 minutes of in-activity.
    n. Biometric access may be used to simplify operator login to the workstation and HMI.
    o. Removable USB Drives are strictly prohibited and shall not be connected to any operator workstation.
    p. USB port restrictions shall be applied via domain/group policies to prevent removable media mounting to the operating system.
    q. Workstation shall have the system clock synchronized with a GPS and/or NTP time source.
    r. Policies shall be applied to whitelist authorized applications only and prevent the installation of unauthorized and/or malicious software and applications.
    s. Workstation policies shall be created to prevent the execution of (but not limited to) PowerShell or batch file scripts.
    t. Workstation policies shall prevent access to the CLI and internal hard drives/file system.

u. Workstation policies shall restrict the use of (but not limited to) SMB, RDP and Telnet protocols.
v. Endpoint protection shall be installed on all Operator Workstations and receive hourly updates to signature and malware databases.

C. SCADA Servers:

1. Relevant NIST 800-82 Rev 2 Controls:
   a. CONTROL TITLE / DESCRIPTION
      1) RA-5 VULNERABILITY SCANNING
      2) AC-2 ACCOUNT MANAGEMENT
      3) AC-7 UNSUCCESSFUL LOGIN ATTEMPTS
      4) AC-6 LEAST PRIVILEGE
      5) AC-11 SESSION LOCK
      6) AU-10 NON-REPUDIATION
2. Specifications:
   a. SCADA Servers shall be rack mounted within a dedicated and environmentally controlled server room which is locked and physically secured.
   b. Physical access to the servers shall be controlled and highly restricted – with entry (to the server room) requiring key/card/code or biometric access credentials.
   c. Servers shall be assessed for software vulnerabilities daily.
   d. Critical and Security related updates and patches shall be thoroughly tested prior to installation onto production servers.
   e. Servers shall be connected to a centralized domain to ensure account management, permissions, access control and policy enforcement are applied consistently across all stations.
   f. Local administrative accounts shall be disabled.
   g. The system shall lockdown after three concurrent unsuccessful login attempts (regardless of input delay) with notifications sent to incident responders requiring immediate investigation.
   h. Administrative access to the workstation / domain shall be highly restricted to authorized users only – separate and unique Admin Accounts shall be created.
   i. Administrative accounts shall not be provided to, or used by operators, to log into SCADA servers.
   j. Any active user session (either direct or remote) shall automatically lock after more than 15 minutes of in-activity.
   k. Removable USB Drives are strictly prohibited and shall not be connected to any SCADA server.
   l. USB port restrictions shall be applied via domain/group policies to prevent removable media mounting to the operating system.

m. Servers shall have the system clock synchronized with a GPS and/or NTP time source.
n. Policies shall be applied to whitelist authorized applications only and prevent the installation of unauthorized and/or malicious software and applications.
o. Server policies shall be created to prevent the execution of (but not limited to) PowerShell or batch file scripts.
p. Server policies shall restrict the use of (but not limited to) SMB, RDP and Telnet protocols.

D. Programmable Logic Controllers (PLCs):

1. Relevant NIST 800-82 Rev 2 Controls:
   a. CONTROL TITLE / DESCRIPTION
      1) PE-3 PHYSICAL ACCESS CONTROL
      2) PE-6 MONITORING PHYSICAL ACCESS
      3) RA-5 VULNERABILITY SCANNING
      4) AC-2 ACCOUNT MANAGEMENT
      5) AC-6 LEAST PRIVILEGE
      6) AU-9 PROTECTION OF AUDIT INFORMATION
      7) SI-7 SOFTWARE, FIRMWARE, AND INFORMATION INTEGRITY
2. Specifications:
   a. All PLCs shall be mounted securely via DIN rail or equivalent inside PLC Cabinets/Enclosures within the production environment which are locked and physically secured.
   b. Direct physical access to the PLC shall be restricted to authorized engineering staff or developers only.
   c. Physical access to USB ports used to upload/download configuration files, applications and firmware shall be highly restricted to a privileged group of engineering personnel only.
   d. PLCs shall be assessed for software vulnerabilities daily – critical CVE's (rating 7 and above) shall be acted upon immediately.
   e. All firmware updates/patches shall be thoroughly tested prior to installation onto production PLCs.
   f. PLCs shall have the system clock synchronized with a GPS and/or NTP time source.
   g. Administrative access to the PLC via programming or administrative software shall be highly restricted to authorized users only – separate and unique administrative and/or engineering accounts shall be created, stored and synchronized within a centralized database.
   h. Default account credentials shall be changed and/or disabled prior to installation.
   i. All web interfaces shall be disabled.

j. The ability to upload programs from the PLC shall be highly restricted to authorized administration, development, or engineering staff only.
k. All PLC configuration/programs files shall be secured, stored and backed up (with versioning controls enabled) within a centralized repository that is highly restricted to authorized administration, development, or engineering staff only.
l. Diagnostic audits shall be used to log all user actions when accessing and making changes to PLC configuration files/programs - logs shall be kept for no less than 90 days. Logs shall be protected from tampering and unauthorized access.
m. The ability to download programs to the PLC shall be highly restricted to authorized administration, development, or engineering staff only.
n. Online editing shall be highly restricted to authorized administration, development, or engineering staff only – if online editing permission is granted, all changes shall be captured by an audit log and stored for no less than 90 days.
o. All changes (including keyswitch changes) to the controller shall be added to the audit log with notifications sent to incident responders.

E. Industrial Network Switches:

1. Relevant NIST 800-82 Rev 2 Controls:
   a. CONTROL TITLE / DESCRIPTION
      1) AC-5 SEPARATION OF DUTIES
      2) RA-5 VULNERABILITY SCANNING
      3) AC-2 ACCOUNT MANAGEMENT
      4) AC-6 LEAST PRIVILEGE
2. Specifications:
   a. All industrial network switches shall be mounted securely via DIN rail or equivalent inside Cabinets / Enclosures within the production environment which are locked and physically secured.
   b. Direct physical access to the switches shall be restricted to authorized administrative or engineering staff only.
   c. Default account credentials shall be changed and/or disabled prior to installation.
   d. Administrative access to the switch via console and/or remote terminal connections shall be highly restricted to authorized users only – separate and unique administrative and/or engineering accounts shall be created, stored and synchronized within a centralized database.
   e. No local user accounts shall be present on any switching hardware.

f. All user authentication requests shall be directed to a RADIUS server or equivalent to control privileged access to the switch from a centralized repository.
g. SSH shall be used to enable remote access, support and monitoring of the switch – Telnet is prohibited.
h. Web Interfaces shall be disabled.
i. SNMPv3 may be enabled to provide remote centralized monitoring.
j. Switch shall have the system clock synchronized with a GPS and/or NTP time source.
k. Unused network edge ports shall be administratively shut down.
l. All edge ports shall have port-fast enabled with BPDU guard enabled.
m. All required networks shall be logically isolated at layer 2 of the OSI model using VLANs.
n. ICMP, CDP and LLDP shall not be permitted on any production switch and shall be disabled post installation.
o. Layer 2 (MAC SEC) shall be implemented on all network switch interconnecting (trunk) links.
p. Port-based security shall be used to restrict devices - authorized devices shall have their MAC addresses bound to a specific port.
q. MAC Address labels on authorized devices shall be concealed or removed to avoid spoofing.
r. All trunk links shall have VLAN ID's explicitly defined – all unused VLAN's shall be pruned from 802.1q trunk links.
s. Authorized devices shall be connected to the switch only.
t. DHCP services shall not be permitted across the industrial network.
u. DHCP Snooping, dynamic ARP Protection and IP Source Guard shall be enabled as a preventative measure on all switching equipment.
v. Un-authorized devices such as operator/contractor personal workstations, portable gateways and removable media are strictly forbidden.

F. Firewalls:

1. Relevant NIST 800-82 Rev 2 Controls:
   a. CONTROL TITLE / DESCRIPTION
      1) AC-4 INFORMATION FLOW ENFORCEMENT
      2) AC-3 ACCESS ENFORCEMENT
      3) RA-5 VULNERABILITY SCANNING
      4) AC-2 ACCOUNT MANAGEMENT
      5) AC-6 LEAST PRIVILEGE

2. Specifications:
    a. Firewalls shall be mounted securely via DIN rail or equivalent inside Cabinets / Enclosures within the production environment which are locked and physically secured.
    b. Direct physical access to the firewalls shall be restricted to authorized administrative or engineering staff only.
    c. Default account credentials shall be changed and/or disabled prior to installation.
    d. Administrative access to the firewall via console and/or remote web or terminal connections shall be highly restricted to authorized users only – separate and unique administrative and/or engineering accounts shall be created, stored and synchronized within a centralized database.
    e. No local user accounts shall be present on any switching hardware.
    f. All user authentication requests shall be directed to a RADIUS server or equivalent to control privileged access to the firewall from a centralized repository.
    g. SSH and/or HTTPS (web) access shall be used to enable remote access, support and monitor the firewalls – Telnet and HTTP protocols are prohibited.
    h. SNMPv3 may be enabled to provide remote centralized monitoring.
    i. Firewall shall have the system clock synchronized with a GPS and/or NTP time source.
    j. Unused firewall ports shall be administratively shut down.
    k. Firewalls shall be licensed appropriately to provide premium hardware support, warranty replacement and a full suite of UTM features including IPS, DoS, AV, DNS, WEB, Proxy, Application, BOTNET Detection and DPI/SSL Inspection.
    l. Firewalls shall provide network separation, policing and filtration on data transmitted across the industrial control network between PLC’s and workstations, servers and HMI/OIT’s.
    m. Anti-Virus (AV) security profiles shall be applied to all firewall policies – all AV profiles shall use proxy-based inspection.
    n. A global Denial of Service profile shall be configured to alert the nominated monitoring system of an increase in incomplete sessions or TCP-SYN floods. The nominated security appliances shall have the latest virus and IPS signatures automatically applied upon release by the Contractor.
    o. The use of protocols including (but not limited to) DHCP, ICMP and LLDP is prohibited.
    p. Changes to firewall configuration shall be captured by audit logs and retained for no less than 90 days with notifications sent to incident responders.

G. Printers:

1. Relevant NIST 800-82 Rev 2 Controls:
   a. CONTROL TITLE / DESCRIPTION
      1) AC-3 ACCESS ENFORCEMENT
      2) AC-2 ACCOUNT MANAGEMENT
      3) AC-6 LEAST PRIVILEGE
2. Specifications:
   a. Only authorized administrative or engineering staff shall be permitted to print ICS related material - access to printer queues from engineering workstations connected to the SCADA network shall be restricted and controlled.
   b. Printed material shall be kept safe and secure at all times by the document owner or authorized staff member and never transmitted or disclosed to unauthorized personnel.
   c. Printed materials to be discarded shall be destroyed and disposed of using a secure shredding service.
   d. Any uncontrolled printed documentation related to any aspect of the SCADA system configuration, function or security shall be immediately destroyed with notifications sent to incident responders and site supervisors.

PART 2 PRODUCTS (NOT USED)

PART 3 EXECUTION (NOT USED)

END OF SECTION

SECTION 26 00 00
ELECTRICAL GENERAL REQUIREMENTS

PART 1 GENERAL

1.01 PURPOSE OF DOCUMENT

A. This document specifies the engineering and design criteria, Electrical General Requirements, pertinent to the Electrical discipline that are used to develop the Project Engineering design documents (Documents) for the Work.

B. Of emphasis is the principle that the Documents are functional and schematic in nature. Contractor shall be responsible to prepare detailed record drawings based on the equipment selected by the Contractor and provide a completely operational system that meets the requirements of the Documents. Any conflict between the design criteria and the Documents shall be brought to the notice of the Owner. Owner's decision shall be final and followed by the Contractor for implementation at no extra cost to the Owner.

1.02 SITE CONDITIONS

A. See Section 01 61 00, Common Product Requirements.

1.03 APPLICABLE CODES AND STANDARDS

A. The electrical system design shall be executed in accordance with the applicable industry standards as listed in this section. This is not a comprehensive list.

1. Institute of Electrical and Electronics Engineers, Inc. (IEEE):
    a. 666, Design Guide for Power Systems for Generating Stations.
    b. 841, Premium-Efficiency, Severe-Duty, Totally Enclosed Fan-Cooled (TEFC) Squirrel Cage Induction Motors - Up to and Including 370kW (500 hp).
    c. 946, Recommended Practice for the Design of DC Auxiliary Power Systems for Generating Stations.
    d. 1100, Recommended Practice for Powering and Grounding Electronic Equipment.
    e. C2, National Electrical Safety Code (NESC).
    f. C37.13, Standard for Low-Voltage AC Power Circuit Breakers Used in Enclosures.
    g. C37.16, Preferred Ratings, Related Requirements, and Application Recommendations for Low-Voltage AC (635V and below) and DC (3200V and below) Power Circuit Breakers.
    h. C37.17, Standard for Trip Devices for AC and General Purpose DC Low Voltage Power Circuit Breakers.
    i. C37.20.2, Metal Clad Switchgear.

j. C37.21, Standard for Control Switchboards.
k. C37.22, Preferred Ratings and Related Required Capabilities for Indoor AC Medium-Voltage Switches Used in Metal-Enclosed Switchgear.
l. C57.12.00, Standard for General Requirements for Liquid-Immersed Distribution, Power, and Regulating Transformers.
m. C57.12.50, Requirements for Ventilated Dry-Type Distribution Transformers, 1 to 500 kVA, Single-Phase, and 15 to 500 kVA, Three-Phase, with High-Voltage 601 to 34 500 Volts, Low Voltage 120 to 600 Volts.
n. C57.13, Requirements for Instrument Transformers.
o. C57.91, Guide for Loading Mineral-Oil-Immersed Power Transformers.
p. C62.11, Standard for Metal Oxide Surge Arresters for AC Power Circuits (>1kV).

2. National Electrical Manufacturers Association (NEMA): MG-1, Motors and Generators.
3. National Fire Protection Association (NFPA): 70, National Electrical Code (NEC).

B. Related Sections, if applicable, and not limited to the following:

1. Section 01 33 00, Submittal Procedures.
2. Section 01 45 36, Equipment Seismic Certification.
3. Section 01 58 53, Project Equipment Identification.
4. Section 01 61 00, Common Product Requirements.
5. Section 01 88 15, Anchorage and Bracing.
6. Section 26 00 10, Electrical Summary of Work.

NOTE: Where a more restrictive or stringent requirement is specified in a related section, the more restrictive or stringent requirement shall apply.

PART 2 PRODUCTS

2.01 TOOLS AND SOFTWARE

A. Design automation tools and software utilized for the performance of the Project Electrical Design by the Engineer, beyond standard word processing, spreadsheet, and database tools, include the following key applications:

1. SmartPlant Electrical (SPEL); a non-physical electrical design tool. SPEL shall be utilized in an ‘integrated’ SmartPlant environment to share data between disciplines and create non-physical electrical design work products out of SPEL that include:
   a. One Line Diagrams (part of E-N series).
   b. Cable Block Diagrams (as required).
   c. Schematic Diagrams (part of E-K series).
   d. Wiring Diagrams (part of E-K series).

e. Electrical Equipment List (part of E-S series).
f. Electrical Cable Schedule (part of E-S series).
g. Electrical Panel Schedules (part of E-S series).

2. SmartPlant 3D (SP3D); a three-dimensional (3D) physical design tool. SP3D shall be utilized in an 'integrated' SmartPlant environment to share data between SP3D and SPEL as well as to create electrical physical electrical design work products out of SP3D that include:
   a. Electrical Location Plans (E-P series).
   b. Electrical Lighting Plans (E-L series).
   c. Electrical Above Ground Raceway Plans (E-T series).
   d. Electrical Underground Raceway Plans (E-U series).
   e. Electrical Hazardous Area Plans (E-H series).
   f. Electrical Grounding Plans (E-G series).
3. AutoCad and/or MicroStation; non-integrated drafting tool for non-SmartPlant drawings. AutoCad and/or MicroStation can be utilized to create electrical design work products not otherwise created in SmartPlant that generally include:
   a. Electrical Installation Details: often design standards that are typical in nature.
   b. Other miscellaneous Electrical design work products not otherwise created in SmartPlant.
4. ETAP; an electrical system modeling tool, shall be utilized for electrical system studies.

REMAINDER OF PAGE INTENTIONALLY LEFT BLANK

PART 3 EXECUTION

3.01 DESIGN CRITERIA

A. The electrical design shall be prepared in accordance with local, state, and federal standards and the appropriate codes of practice and standards as referred to herein. Electrical construction documents shall be sealed and signed by a licensed Professional Engineer as required.

B. The content of this section applies to the entire WPC program of contracts. Not all equipment listed in this section is applicable to Contract 1444. The content is included to generally demonstrate the utility grade nature of the equipment being furnished and expected as part of Contract 1444.

C. Project voltages and frequencies are both standard and non-standard; great care shall be taken to assure the proper voltage and frequency is utilized and coordinated throughout the design. Typical project voltages and frequencies are as follows:

Voltage	Frequency	Phase
24kV ac	60Hz	3PH, 3W
13.8kV ac	60Hz	3PH, 3W
6.6kV ac	25Hz	3PH, 3W
4.16kV ac	60Hz	3PH, 3W
3.3kV ac	25Hz	3PH, 3W
480V ac	25Hz and 60Hz	3PH, 3W and 3PH, 4W
208V ac	25Hz and 60Hz	3PH, 4W
120V ac	25Hz and 60Hz	1PH, 2W
125V dc	--	2W

3.02 POWER TRANSFORMERS

A. Medium voltage power transformers shall be station class outdoor rated liquid filled specified to conform with IEEE C57.12.00 configured to conform with the requirements of the Contract Documents.

3.03 DISTRIBUTION TRANSFORMERS

A. Small power distribution transformers shall be of the dry type. Only copper windings shall be used. Rated for the environment in which the Drawings require. If small power distribution transformers derive a neutral, they shall be K rated such that the neutral K rating is at least equivalent to the phase rating.

3.04 MEDIUM VOLTAGE SWITCHGEAR

A. Medium voltage, 24kV, 13.8kV, 6.6kV, or 4.16kV, switchgear (SWGR) shall be specified to conform with IEEE C37.20.2 and suitable for operation on a three-phase, three-wire, 25-Hz or 60-Hz system, as required by the system within which they operate and as shown in the Contract Documents.

B. Medium voltage switchgear shall be of the metal-clad type and adequate to meet the parameters derived from the system model analysis.

C. Medium voltage switchgear shall be designed and built for the environment and application required by the system within which they operate and shall be free-standing fully enclosed. Where a 'sheltered aisle' style enclosure is utilized, the sheltered aisle shall be illuminated and of sufficient clear space to comply with code required working clearances and to allow for reasonable maintenance access.

D. Only copper buses shall be used with silver plating at joints.

E. All power circuit breakers shall utilize vacuum interrupters. All power circuit breakers shall have remote close/open/trip capability. All power circuit breakers shall be configured for remote racking. A shared remote racking device shall be provided. All power circuit breakers shall be removable for testing and service.

F. Indicating lights shall be supplied and provide, at a minimum, "closed" and "open" statuses. Red shall be used for closed and positioned on the right. Green shall be used for open and positioned to the left.

G. Humidistatically controlled space heaters shall be provided in each vertical section.

3.05 LOW VOLTAGE SWITCHGEAR

A. Low voltage, 480V, switchgear (SWGR) shall be 600V class suitable for operation on a three-phase, three-wire or four-wire, 25-Hz or 60-Hz system, as required by the system within which they operate and as shown on the Drawings.

B. Low voltage switchgear lineup shall be of the metal-enclosed type and adequate to meet the parameters derived from the system model analysis. Only tin-plated copper buses shall be used.

C. Remote start/stop capability shall be provided for those elements shown on the Drawings with remote start/stop capability.

D. Power circuit breakers shall be configured for remote racking. A shared remote racking device shall be provided.

E. Indicating lights shall be supplied and provide, at a minimum, “off” and “run” statuses. Red shall be used for “run” and positioned on the right. Green shall be used for “off” and positioned to the left.

F. Humidistatically controlled space heaters shall be provided in each vertical section.

3.06 PROTECTIVE RELAYS

A. All new protective relays shall be of the solid-state microprocessor multifunction type and networked protection IEC 61850 compatible. New protective relays shall, as much as practical, match the existing solid-state microprocessor multifunction type relays found in the facility to enable improved safety and operations through consistency of understanding for the plant personnel, as well as potential efficiency in spare parts through common equipment. In general Schweitzer Engineering Laboratories (SEL) microprocessor multifunction type relays are the basis of design for medium voltage (24kV, 13.8kV, 6.6kV, and 4.16kV) applications and GE Multilin relays are the basis of design for low voltage (480V) applications.

B. A general protective relaying principle is to focus the protections functionality as close to the action-device as practical to improve system resiliency and reliability. This principle is consistent with electrical control system objectives outlined elsewhere in this Specification. Illustrative example would include locating the protective relay associated with a power circuit breaker, an ‘action-device’, in the power circuit breaker cubicle inclusive of the electrical control system local input/output signals associated with that ‘action-device’. Another similar example would be locating a power transformer protection relay within the power transformer control cabinet inclusive of the electrical control system local input/output signals associated with that power transformer.

3.07 CONTROL POWER

A. Control power for process critical systems shall be provided from sources that are supplied by redundant sources and/or include battery backed source. Control power shall generally be 120V ac 60-Hz single phase or 125V dc.

3.08 GROUNDING

A. All new equipment shall be tied to the plant ground grid. If the equipment is outdoors and interconnection to the existing plant ground grid is not practical, a localized ground shall be derived per the Drawings utilizing both ground rod(s) and buried grounding conductor. All above grade grounding connections shall be made using mechanical connections (Burndy G Series or equivalent) while all below grade connections shall be made with exothermic welds.

3.09 MOTORS

A. All new motors shall be Premium Efficiency Totally Enclosed Fan Cooled (TEFC) Squirrel cage induction motors, with a service factor of 1.15, and shall be acceptable for across-the-line starting, unless the process conditions and/or application require an alternate form of construction.

B. Aluminum enclosures are not acceptable. Only cast iron or steel shall be acceptable.

C. All motors rated 20 hp and above shall be equipped with space heaters and Inpro bearing seals.

D. All exposed metal surfaces shall be protected with a corrosion-resistant polyester paint or coating.

E. Terminal irons shall be cast iron, gasketed, and water-tight. Adequate room shall be supplied to meet cable training radius requirements. Motor terminal boxes shall be oversized by at least one size to ensure adequate room for potentially oversized feeder cable.

F. All insulated windings shall be copper. The winding insulation shall be Class F with temperature rise not to exceed NEMA MG-1 class B insulation temperature values given in NEMA MG-1 table 12.43.

3.10 RACEWAY SYSTEMS

A. Above ground raceway systems shall utilize aluminum cable tray and aluminum rigid conduit. Minimum conduit size is 3/4 inch.

B. Underground raceway systems shall generally be red-concrete encased PVC schedule 40 conduit, as further detailed on the Drawings. Minimum conduit size for medium voltage circuits is 5-inch diameter.

C. Direct buried conduit is not acceptable.

3.11 CABLE SYSTEMS

A. All cables shall be rated for the proper voltages, color-coded, and generally tray rated. Control cables shall be color coded by the ICEA E2 Color code table, unless specified otherwise in an application-specific Specification section.

B. Direct buried cable is not acceptable, unless approved otherwise.

3.12 LIGHTING

A. All new lighting shall be design in accordance with IESNA and calculate average illumination levels with 0.8 maintenance factor.

B. Lighting shall be high efficiency. LED class fixtures shall be utilized where available. Lighting shall be optimized for the intended service and facilitate operations objectives while also enabling safe maintenance. Where practical, fixtures of the same manufacturer and series shall be utilized to reduce maintenance costs via shared spare parts.

C. Lighting shall be generally 120V ac or 277V ac to match existing lighting systems. If required to replace fixtures on DC sourced circuits, retain DC source and confirm circuit capacity is not adversely affected. New fixtures providing emergency egress shall be equipped with self-contained battery with a minimum 90-minute rating.

D. Match the fixture rating to the environment in which the fixture shall be installed.

E. Illumination levels shall be as follows:

1. Mechanical/Electric Rooms: 30 FC.
2. Emergency Lighting: 1.5 FC.

F. Emergency Exit Signs shall be provided at exit doors and as required by local building codes. Features shall include:

1. Die cast with universal mounting.
2. Emergency long life battery with automatic battery charger.
3. White background with green letters and universal chevrons.

G. Initial loading of lighting transformers shall not exceed 60 percent of base rating of transformer.

3.13 ELECTRICAL CONTROL SYSTEM

A. The electrical control system (ECS) is either part of the more general Plant Control System (PCS) or part of the Power Distribution Control System (PDCS), or may be neither up-to and even a stand-alone implementation that is not integrated into any other control system. The reason for this article is that input/output interfaces specified in the electrical Specification Sections may not explicitly indicate which control system those interfaces are intended for nor may the Drawings include all input/output points, yet are a requirement and shall be included in the coordinated control system implementation. *This requirement is included with emphasis to highlight that not all input/output points are explicitly shown on the Drawings and review of all Specification sections for input/output requirements is the responsibility of the Contractor and exclusion of input/output points from the Drawings is not a basis for change.*

B. Several control system Specification sections may be included as appropriate based on the Scope of Work. It is important to recognize that these Specification sections do not stand alone and shall be read with all control system sections coordinated per the Scope of Work. Some of the PDCS control system Specification sections include:

1. 40 94 23, PDCS Electrical Control System (ECS).
2. 40 94 24, PDCS Human Machine Interface (HMI).
3. 40 94 25, PDCS Data Exchange Interface (DEI).

END OF SECTION

SECTION 26 00 10
ELECTRICAL SUMMARY OF WORK

PART 1 GENERAL

1.01 ELECTRICAL

A. The West Power Complex (WPC) electrical scope of work (the "Work") combines several functional elements to achieve an interconnected, highly reliable, megawatt-scale power supply and distribution system between the 60Hz Utility source and the 60-Hz and 25-Hz parts of the SWBNO managed electrical network. The intent of the WPC Project (a Program of Contracts) is to improve the resiliency and reliability of critical Sewerage & Water Board of New Orleans (SWBNO) managed electrical network infrastructure.

B. An important aspect of the Work is the wide range of physical areas and functional areas, as well as systems, involved to complete the Work. This Summary of Work, Project Documents, and Equipment Identification utilize 'functional areas' and 'systems' to provide structure to the information. A

Functional Area, or simply Area, is primarily the aggregation for convenience of logically-associated system elements, and is often also a physically-distinct area. However, a Functional Area is not constrained by physical co-location. A System is the organization of elements by process system - dominantly, a mechanical or process-driven designation. However, a System designation is also utilized (and applicable) to electrical systems.

1.02 WORK BREAKDOWN BY FUNCTIONAL AREA

A. Fuel Oil Return Pump Area:

1. Fiber cabling, including installation in existing underground conduit and new aboveground conduit, from the new Fuel Oil Forwarding Pump Skid to the Auxiliary Electrical Building.
2. Power cabling, including installation in existing underground conduit and new aboveground conduit, from the Fuel Oil Return Pump Skid to the Auxiliary Electrical Building (PDC1).
3. Installation of Fuel Oil Return Pump Skid including all electrical tie in interfaces and commissioning.
4. Grounding of the Fuel Oil Return Pump Skid.

Power and control cabling associated with the double wall fuel oil containment piping leak detection system.

B. Bulk Fuel Oil Storage Containment Area (CWPBFS):

1. Fiber cabling, including installation in existing underground conduit and new aboveground conduit, from the new Fuel Oil Forwarding Pump Skid to the Chemical Building.
2. Power cabling, including installation in existing underground conduit and new aboveground conduit, from the Fuel Oil Forwarding Pump Skid to the Sludge Pump House electrical room near the WPC.
3. Installation of Fuel Oil Forwarding Pump Skid including all electrical tie in interfaces and commissioning.
4. Installation of area lighting at the Fuel Oil Forwarding Pump Skid and access platform.
5. Grounding of the Fuel Oil Forwarding Pump Skid.
6. Power and control cabling associated with the double wall fuel oil containment piping leak detection system.
7. Area lighting and associated power and control.

1.03 POWER DISTRIBUTION CONTROL SYSTEM (PDCS):

1. PDCS network configuration updates.
2. PDCS main control room HMI updates.
3. PDCS historian updates.
4. Add safety light modification:
   a. Safety light configuration.
   b. Cardkey configuration.
5. Make ready for GCS implementation.
6. Add pre-programmed sequences.
7. Develop shift reports.
8. Add/modify/update OTI-PI interface.

PART 2 PRODUCTS (NOT USED)

PART 3 EXECUTION

3.01 GENERAL

A. Testing and inspection shall conform to the requirements included in each applicable Specification section.

B. Structural steel and architectural features in existing infrastructure may be coated with lead-based paint. Any work related to cutting, welding, drilling, bolting, or otherwise disturbed steel and surface coatings shall not be performed by Contractor until tested for presence of lead-based paint at the affected work area. If confirmed to be lead-based paint, the Contractor shall mitigate the paint at the work area prior to continuing with the Work. Contractor shall notify Owner of the testing and, if required, mitigation. A testing and mitigation procedure shall be submitted to the Owner prior to the Work.

C. Wire and cable insulation in the existing Work areas may contain hazardous material, either asbestos or lead, as rarely found when maintaining existing equipment. Any work related to modifying or otherwise disturbing existing wire or cable shall not be performed by Contractor until tested for presence of these noted materials at the affected work area. If confirmed, the Contractor shall mitigate the affected work area prior to continuing with the Work. Contractor shall notify Owner of the testing and mitigation. A testing and mitigation procedure shall be submitted to the Owner prior to the Work.

D. Develop an overall construction sequencing plan, as further detailed elsewhere in this Specification, to minimize interruptions to the ongoing operations with special attention to electrical construction activities. The electrical aspects of the overall construction sequencing plan shall include, at a minimum, the following work breakdown coding against all tagged items that are generally included in all Electrical Lists and Schedules.

1. Engineering Work:
    a. Engineering Work Area (EWA).
    b. Engineering Work Group (EWG).
    c. Engineering Work Package (EWP).
2. Construction Work:
    a. Construction Work Area (CWA).
    b. Construction Work Group (CWG).
    c. Construction Work Package (CWP).
3. Testing Work (also known as Startup):
    a. Testing Work Area (TWA).
    b. Testing Work Group (TWG).
    c. Testing Work Package (TWP).
4. Turnover Work:
    a. Turnover Work Area (TOPA).
    b. Turnover Work Group (TOPG).
    c. Turnover Work Package (TOP).
5. Separable Portion: Separable Portion Package (SPP).
6. System Dossier Index:
    a. System Dossier Index Area.
    b. System Dossier Index Group.
    c. System Dossier Index Number.
7. Example construction sequencing work breakdown coding.

Example for Item Tag WPCAUX-0-EMV60-SG-301A:	
Engineering Work:	
Engineering Work Area (EWA)	CP1427-WPCAUX-EWA.00.00.E
Engineering Work Group (EWG)	CP1427-WPCAUX.0-EWG.00.00.E
Engineering Work Package (EWP)	CP1427-WPCAUX.0.<TBD>-EWP.00.00.E
Construction Work:	
Construction Work Area (CWA)	CP1416-WPCAUX-CWA.00.00.E
Construction Work Group (CWG)	CP1416-WPCAUX.0-CWG.00.00.E
Construction Work Package (CWP)	CP1416-WPCAUX.0.<TBD>-CWP.00.00.E
Testing Work (also known as Startup):	
Testing Work Area (TWA)	CP1416-WPCAUX-TWA.00.00.E
Testing Work Group (TWG)	CP1416-WPCAUX.0-TWG.00.00.E
Testing Work Package (TWP)	CP1416-WPCAUX.0.<TBD>-TWP.00.00.E
Turnover Work:	
Turnover Work Area (TOPA)	CP1416-WPCAUX-TOPA.00.00.E
Turnover Work Group (TOPG)	CP1416-WPCAUX.0-TOPG.00.00.E
Turnover Work Package (TOP)	CP1416-WPCAUX.0.<TBD>-TOP.00.00.E
Separable Portion:	
Separable Portion Package (SPP)	CP1416-WPCAUX.<TBD>-SPP.00.00.E
System Dossier Index:	
System Dossier Index Area	WPCAUX
System Dossier Index Group	WPCAUX.0
System Dossier Index Number	WPCAUX.0.<TBD>

END OF SECTION

INTENTIONALLY LEFT BLANK

SECTION 26 05 04
ELECTRICAL REQUIREMENTS FOR PACKAGED MECHANICAL EQUIPMENT

PART 1 GENERAL

1.01 SUMMARY

A. This section specifies the general requirements for the electrical design and construction of electrical components furnished as part of mechanical equipment. Reference relevant Mechanical Specifications for further mechanical equipment requirements.

B. Contractor's Scope and Responsibility:

1. All assembly and wiring within the package.
2. Electrical power supply feeder and grounding to the termination point of equipment.
3. Wiring between pieces of the equipment that is shipped disassembled.

C. Substitutions/Exceptions:

1. Note exceptions and advise of deviations, additions, deletions, or other changes to specified requirements.
2. Deviations are permitted only if outlined in full detail and authorized in an executed Change Order.

D. Related Sections, as applicable, and not limited to the following:

1. Section 01 33 00, Submittal Procedures.
2. Section 01 58 53, Project Equipment Identification.
3. Section 01 61 00, Common Product Requirements.
4. Section 26 00 00, Electrical General Requirements.
5. Section 26 00 10, Electrical Summary of Work.

NOTE: Where a more restrictive or stringent requirement is specified in a Related Section, the more restrictive or stringent requirement shall apply.

1.02 REFERENCES

A. The following codes and standards shall be applied to all work. Note that this list is not all inclusive, and where additional codes and standards are listed, those additional codes and standards shall apply by reference.

1. American National Standards Institute (ANSI): ANSI/TIA 568-C.2, Balanced Twisted-Pair Telecommunications Cabling and Components Standard.

2. Institute of Electrical and Electronics Engineers (IEEE):
   a. C2, National Electrical Safety Code.
   b. C62.37, Standard Specification for Thyristor Diode Surge Protective Devices.
   c. 666, Design Guide for Electric Power Service Systems for Generating Stations.
   d. 835, Standard Power Cable Ampacity Tables.
   e. 1185, Recommended Practice for Cable Installation in Generating Stations and Industrial Facilities.
3. National Electric Code (NEC).
4. National Electrical Manufacturers Association (NEMA):
   a. HP 100, High Temperature Instrumentation and Control Cables.
   b. TR 1, Transformers, Regulators, and Reactors.
   c. WC 26, Binational Wire and Cable Packaging Standard.
   d. WC 57, Standard for Control, Thermocouple Extension, and Instrumentation Cables.
   e. WC 70, Power Cables Rated 2000 Volts or Less for the Distribution of Electrical Energy.
5. National Fire Protection Association (NFPA): 70, National Electrical Code (NEC).
6. International Electrical Testing Association (NETA).
7. UL: 1449, Standard for Safety Surge Protective Devices.

B. Where two or more codes or standards establish different or conflicting requirements, the more stringent standard shall apply.

1.03 SUBMITTALS

A. Documentation shall be submitted in accordance with Section 01 33 00, Submittal Procedures. In addition to the documents required by Section 01 33 00, Submittal Procedures, or required elsewhere in this section, the following Drawings and data shall be submitted for approval:

1. Equipment outlines including junction box size and location.
2. Elementary diagrams and schematic diagrams.
3. Connection Wiring diagrams indicating terminal points for external wiring.
4. Control Panel arrangement drawings.
5. Bill of materials listing each device by manufacturer’s part number.
6. Load List information for all equipment supplied.
7. Motor data sheets.
8. Packaged Mechanical Equipment Cable Schedule listing cable tag number, cable type, cable from, cable to, cable scope of design, cable scope of supply, cable scope of installation, and cable function. All cables required for a complete and functional package shall be included in Packaged Mechanical Equipment Cable Schedule.

9. Packaged Mechanical Equipment Terminal Strip Schedule listing terminal strip tag number, terminal strip configuration, terminal strip voltage rating, terminal strip terminal numbering, and terminal usage in reverse-address form.
10. Installation and Operating Manuals.
11. Manufacturer Drawings and Catalog Cut Sheets for all components.
12. Test Reports for all components.

B. Additional Documentation:

1. Submit complete engineering information for electrical items being furnished. The information shall include but not be limited to: horse power ratings, operating voltage, frequency, amperage, power factor, demand factor, and other data which can help the adequate sizing of the power supply.
2. Submit electrical documentation indicating sensors, RTDs, and control devices as well as their operating voltage.
3. List required external power sources indicating voltage, number of phases, frequency, maximum and nominal kW and kVA requirements.
4. Submit design data sheets, descriptive literature, outline dimensions, anchor bolt location drawings, junction box locations, and other conduit interface points.

PART 2 PRODUCTS

2.01 CONTROL PANEL ENCLOSURES

A. Provide dead-front control panels. Provide NEMA 12 enclosures (minimum) for indoor use (control panels in indoor process areas shall be NEMA 4X minimum), and NEMA 4X for outdoor use unless specifically stated otherwise. Provide enclosures with hinged doors complete with three-point latching devices.

B. Control pushbuttons, selector switches, gauges, meters, indicating lights, phenolic labels (i.e., emergency tags, equipment tags, nameplates, item tags, etc.), digital displays, communication ports, HMI/touchscreen devices, or other similar control interface equipment or identification shall be surface-mounted on control cabinet door.

C. If the final location of equipment installed is in a location requiring enclosure rating different than generally specified herein, such as a hazardous location defined by the NEC, the Contractor shall provide equipment listed for the location. Particular attention shall be given to hazardous, corrosive, and areas subject to wash-down. In hazardous area all equipment shall be listed for installation in hazardous location of the same Class, Division, and Group. The electrical equipment and wiring method shall comply with applicable sections of NEC.

D. Enclosures shall have adequate HVAC for space heating and cooling to prevent condensation and keep components within manufacturer's recommended operating temperature. Enclosure HVAC shall not compromise enclosure NEMA rating.

2.02 WIRING

A. No splices allowed in raceways. If splicing of wires is required, it shall be performed in a junction box on a terminal strip. All circuits shall be appropriately labeled. Wire nuts are not acceptable.

B. Route wiring for the installation of external connections to identified, adequately rated enclosed terminal strips. Label and crimp internal wiring at both ends. Segregate control voltage wiring and terminals with a grounded separation barrier within panels. Wire skid-mounted instruments to a signal interface box with location clearly identified on submittal Drawings. Control cables shall be terminated with ring tongue terminals.

C. Enclose wiring inside the panel in plastic wiring duct. Identify wires with preprinted, slide-on type or heat-shrink type markers at each end. 120V ac and 480V ac circuits shall be separated from signal wiring inside panel and run in wireway. Provide hinge wiring for front panel devices. Wrap wiring with plastic cable stays. Secure hinged wiring at each end so that bending, or twisting shall be around the longitudinal axis of the wire. Protect the bend area with a sleeve.

D. Show the location of cable entries to electrical equipment on arrangement Drawings.

E. Provide an internal high efficiency totally enclosed light for the enclosure section. Provide a light switch and 120V ac convenience outlet with NEMA 5-20R configuration in the panel. Light and outlet shall be fed separately from other equipment in the panel.

F. Individually fuse devices utilizing blown-fuse-indicating fusible terminal blocks.

2.03 RACEWAY

A. All wiring to be enclosed in rigid aluminum conduit.

B. Utilize Schedule 80 PVC conduit in corrosive environments.

C. Conduit shall be 3/4-inch minimum.

D. Liquid-tight or explosion-proof flexible conduit shall be used for connections to all equipment where adjustment or vibration requires flexible connections. Maximum length of flexible conduit shall be 30 inches.

E. Conduit penetrations for panels located in corrosive or wet areas are permitted only through the bottom of the panel.

2.04 TERMINAL BLOCKS

A. Provide terminal blocks for all field wiring, capable of accepting a minimum of two ring tongue terminated 12 AWG wires and rated no less than 20A.

B. Group terminal blocks according to function and voltage level. Provide minimum 20 percent spare terminals at each voltage level.

C. Permanently identify terminal block groups with an engraved nameplate. Individual terminals shall be labeled.

D. Keep field side of terminal block free of wiring. Provide an empty run of plastic wiring duct for field wiring. Terminate external device wiring at terminal blocks.

E. Provide a clear protective cover for exposed terminals with a voltage above 50V to eliminate accidental contact.

F. For thermocouple wiring, provide thermocouple terminal blocks of the same type (J, K, etc.) as the associated thermocouple.

2.05 NAMEPLATES, NAME TAGS, AND SERVICE LEGENDS

A. Equipment identification shall comply with Section 01 58 53, Project Equipment Identification, as well as any additional identification requirements listed in this article.

B. Provide components with permanently-mounted nametags bearing the entire tag number of the component. Nameplates shall be laminated plastic with black engraved characters on white background.

C. Affix exterior front of panel nameplates to the panel using stainless steel screws.

D. Affix interior nameplates next to the device with industrial-grade adhesive.

2.06 GROUNDING

A. Install grounding in accordance with the Drawings, NEC, and other applicable codes and ordinances.

B. Provide grounding conductors in continuous lengths. Splices or joints are not permitted.

C. Provide lug or bus for connection to equipment grounding conductor.

D. Provide two grounding connections per skid, diagonally opposite of each other.

2.07 POWER SUPPLIES

A. Provide dc power supplies to power instruments requiring external dc power. Power supplies shall convert 120V ac, 60-Hz power to dc power of the appropriate voltages with sufficient voltage regulation and ripple control to ensure the instruments being supplied can operate within their required tolerances. Provide power supplies with output overvoltage and overcurrent protective devices to protect the instruments from damage due to power supply failure and to protect the power supply from damage due to external failure. Mount power supply within control cabinet or junction box on skid or provide enclosure of similar rating as other enclosures on the skid for power supplies. Mount power supplies such that dissipated heat does not adversely affect other components.

B. Provide power supply with a rating of minimum 50 percent greater than calculated requirement.

C. Provide control transformers with a rating minimum 50 percent greater than calculated requirement.

D. Provide clear protective cover for exposed terminals on the power supply with a voltage above 50V to eliminate accidental contact.

2.08 CONTROL CIRCUITS

A. All control and alarm circuits shall be wired according to fail safe logic. Alarm circuits shall open to alarm.

B. 120V ac power supplies to Contractor’s PLCs, where applicable, shall be supplied from Owner’s UPS.

C. Suitable circuit protections shall be provided so that any one electrical fault does not affect more than one unit or system. The protection can be accomplished by either circuit breaker or fuse.

D. Auxiliary control relays shall have contacts rated 10A at 30V dc and 120V ac.

E. Provide control relay with screw terminal interface between the PLC output and motor starters.

F. All relays shall be provided with at least 2 NO and 2 NC spare contacts for use by the Owner. In the event that this requirement will result more contacts that can be mounted on a relay or contactor, the Contractor shall provide auxiliary relay.

G. Mount relays such that the terminal identifications are clearly visible, and terminals are readily accessible.

H. A disconnecting means shall be provided to permit servicing of individual system or control components. Where all power to a packaged unit is supplied by one main feeder, Contractor shall provide a main disconnecting means so that the entire package may be deenergized from one location on the skid. Equipment skids provided with two 100 percent redundant components shall be provided with individual disconnects so that each redundant component can be taken out of service without affecting the other component. Disconnecting means shall be capable of being locked out in the off position only.

I. Indicating lights and pushbutton color shall be red for operating and green for not operating.

J. All Motor Operated Valves (MOV) shall be provided with integrally mounted combination starters for remote operation by Owner's PLC. MOV starters shall also have provision for local operation and valve position indication.

K. Contractor furnished motors shall be supplied with motor starters with overloads unless otherwise noted. Motor starter shall include a disconnecting device capable of being locked in the open position.

L. All wiring terminal points between the Contractor and others (customer interface wiring) shall be made in a terminal box supplied by Contractor and mounted on skid.

2.09 LOW VOLTAGE CIRCUITS

A. Where the control panel contains electronics such as PLCs, DDCs, or other programmable devices and no UPS power is available, provide a power filter which meets the following requirements:

1. Provides protection from voltage spikes, sags, and surges.
2. Provides minimum 40 dB reduction of electrical noise for frequencies from 50 kHZ to 50 MHZ.
3. Complies with UL 1449 for surge withstand capability.

B. Communication Links: Where cables and conductors serve as communication links between programmable controllers, provide surge-protection circuits at each end which meet IEEE Standard C62.37 surge withstand capability tests.

PART 3 EXECUTION

3.01 WIRING AND IDENTIFICATION

A. Each circuit/wire and cable shall be clearly identified at each end and in junction, terminal, or pullbox with proper and unique identifying number. Individual wires shall have the same identifier at both ends where they terminate. Labels shall be firmly attached and shall be of permanent non weathering type. Affixing labels using wire straps or similar devices that can easily be removed is not acceptable.

B. Between termination points, wires shall be installed in adequately sized and properly supported raceways. Raceways shall be of material suitable for the location. In highly corrosive applications raceways shall be either PVC, PVC-coated, galvanized steel, or fiberglass. PVC conduits shall not be acceptable in hazardous areas.

C. Use of wire nuts shall not be permitted.

D. Provide nameplate for each panel, junction box or pullbox. Labels shall be affixed to the cover using stainless steel screws or other permanent method. Gluing the nameplates is not acceptable. Nameplates for emergency equipment or for warning shall be red background and white engraved lettering in conjunction with requirements set forth in Section 01 58 53, Project Equipment Identification.

E. All control and measurement devices, switches, relays, contactors and indicating lights shall be labeled. The tag number of each device shall be the same as indicated in Drawings, elementary control diagrams, or other schematic diagrams. Any discrepancies found shall be fixed at the expense of the Contractor.

3.02 TESTING

A. Prior to shipment, check tags, labels, and nameplates for correct inscription, color, size, letter size, spelling, and location.

B. At the panel factory, perform a continuity test of wiring to verify conformance of wiring circuits to the Drawings. Correct discrepancies prior to shipment to Site.

C. A functional test of each individual component shall be performed in the shop, before assembly. The functional test shall consist of simulating the Owner’s devices and complete exercising of each circuit while observing for proper operation.

D. Wiring 480V and above shall be checked for insulation resistance. Values above 10 MOhm shall be considered acceptable.

3.03 INSPECTIONS

A. Materials, equipment, and workmanship are subject to inspection at any time. Correct Work, materials, or equipment not in accordance with these Contract Documents or found to be deficient or defective in a manner satisfactory to Owner at no additional cost.

END OF SECTION

INTENTIONALLY LEFT BLANK

SECTION 26 05 19
LOW VOLTAGE CONDUCTORS & CABLES

PART 1 - GENERAL

1.1 SUMMARY

A. Section Includes:

1. Building wires and cables rated 600 V and less.
2. Connectors, splices, and terminations rated 600 V and less.

1.2 DEFINITIONS

A. VFC: Variable frequency controller.

1.3 ACTION SUBMITTALS

A. Product Data: For each type of product.

1.4 INFORMATIONAL SUBMITTALS

A. Qualification Data: For testing agency.

B. Field quality-control reports.

1.5 QUALITY ASSURANCE

A. Testing Agency Qualifications: Member company of NETA or an NRTL.

1. Testing Agency's Field Supervisor: Certified by NETA to supervise on-site testing.

PART 2 - PRODUCTS

2.1 CONDUCTORS AND CABLES

A. Manufacturers: Subject to compliance with requirements, available manufacturers offering products that may be incorporated into the Work include, but are not limited to, the following:

B. Basis-of-Design Product: Subject to compliance with requirements, provide product indicated on Drawings or comparable product by one of the following:

1. Alcan Products Corporation; Alcan Cable Division.
2. Alpha Wire.
3. Belden Inc.
4. Encore Wire Corporation.
5. General Cable Technologies Corporation.
6. Southwire Incorporated.

C. Copper Conductors: Comply with NEMA WC 70/ICEA S-95-658.

D. Conductor Insulation: Comply with NEMA WC 70/ICEA S-95-658 for Type THHN-2-THWN-2.

E. Multiconductor Cable: Comply with NEMA WC 70/ICEA S-95-658 for armored cable, Type AC, metal-clad cable, Type MC, Type SO and, Type USE with ground wire.

2.2 CONNECTORS AND SPLICES

A. Manufacturers: Subject to compliance with requirements, available manufacturers offering products that may be incorporated into the Work include, but are not limited to, the following:

B. Basis-of-Design Product: Subject to compliance with requirements, provide product indicated on Drawings or comparable product by one of the following:

1. AFC Cable Systems, Inc.
2. Gardner Bender.
3. Hubbell Power Systems, Inc.
4. Ideal Industries, Inc.
5. Ilsco; a branch of Bardes Corporation.
6. NSi Industries LLC.
7. O-Z/Gedney; a brand of the EGS Electrical Group.
8. 3M; Electrical Markets Division.
9. Tyco Electronics.

C. Description: Factory-fabricated connectors and splices of size, ampacity rating, material, type, and class for application and service indicated.

2.3 SYSTEM DESCRIPTION

A. Electrical Components, Devices, and Accessories: Listed and labeled as defined in NFPA 70, by a qualified testing agency, and marked for intended location and application.

B. Comply with NFPA 70.

PART 3 - EXECUTION

3.1 CONDUCTOR MATERIAL APPLICATIONS

A. Feeders: Copper. Solid for No. 10 AWG and smaller; stranded for No. 8 AWG and larger.

B. Branch Circuits: Copper. Solid for No. 10 AWG and smaller; stranded for No. 8 AWG and larger, except VFC cable, which shall be extra flexible stranded.

3.2 CONDUCTOR INSULATION AND MULTICONDUCTOR CABLE APPLICATIONS AND WIRING METHODS

A. Service Entrance: Type THHN/THWN-2, single conductors in raceway, Type XHHW-2, single conductors in raceway, Type SE or Type USE multiconductor cable.

B. Exposed Feeders: Type THHN/THWN-2, single conductors in raceway, Type XHHW-2, single conductors in raceway, Armored cable, Type MC Feeders Concealed in Ceilings, Walls, Partitions, and Crawlspaces: Type THHN/THWN-2, single conductors in raceway, Metal-clad cable, Type MC.

C. Feeders Concealed in Concrete, below Slabs-on-Grade, and Underground: Type THHN/THWN-2, single conductors in raceway, Type XHHW-2, single conductors in raceway, Underground feeder cable, Type UF.

D. Branch Circuits Concealed in Ceilings, Walls, and Partitions: Type THHN/THWN-2, single conductors in raceway, Metal-clad cable, Type MC.

E. Branch Circuits Concealed in Concrete, below Slabs-on-Grade, and Underground: Type THHN/THWN-2, single conductors in raceway, Type XHHW-2, single conductors in raceway.

F. Cord Drops and Portable Appliance Connections: Type SO, hard service cord with stainless-steel, wire-mesh, strain relief device at terminations to suit application.

3.3 INSTALLATION OF CONDUCTORS AND CABLES

A. Conceal cables in finished walls, ceilings, and floors unless otherwise indicated.

B. Complete raceway installation between conductor and cable termination points according to Section 16130 "Raceways and Boxes" prior to pulling conductors and cables.

C. Use manufacturer-approved pulling compound or lubricant where necessary; compound used shall not deteriorate conductor or insulation. Do not exceed manufacturer's recommended maximum pulling tensions and sidewall pressure values.

D. Use pulling means, including fish tape, cable, rope, and basket-weave wire/cable grips, that shall not damage cables or raceway.

E. Install exposed cables parallel and perpendicular to surfaces of exposed structural members, and follow surface contours where possible.

F. Support cables according to Section 26 05 29 "Hangers and Supports for Electrical Systems."

3.4 CONNECTIONS

A. Tighten electrical connectors and terminals according to manufacturer's published torque-tightening values. If manufacturer's torque values are not indicated, use those specified in UL 486A-486B.

B. Make splices, terminations, and taps that are compatible with conductor material and that possess equivalent or better mechanical strength and insulation ratings than unspliced conductors.

C. Wiring at Outlets: Install conductor at each outlet, with at least 6 inches of slack.

3.5 IDENTIFICATION

A. Identify and color-code conductors and cables according to Section 26 05 53 " Identification for Electrical Systems."

B. Identify each spare conductor at each end with identity number and location of other end of conductor, and identify as spare conductor.

3.6 SLEEVE AND SLEEVE-SEAL INSTALLATION FOR ELECTRICAL PENETRATIONS

A. Install sleeves and sleeve seals at penetrations of exterior floor and wall assemblies. Comply with requirements in Section 16091 "Sleeves and Sleeve Seals for Electrical Raceways and Cabling."

3.7 FIELD QUALITY CONTROL

A. Testing Agency: Engage a qualified testing agency to perform tests and inspections.

B. Manufacturer's Field Service: Engage a factory-authorized service representative to test and inspect components, assemblies, and equipment installations, including connections.

C. Perform the following tests and inspections with the assistance of a factory-authorized service representative:

1. After installing conductors and cables and before electrical circuitry has been energized, test service entrance and feeder conductors and conductors feeding the following critical equipment and services for compliance with requirements.

    a. Uninterruptible Power Supply (FCLAB-UPS1).

    b. Voltage Regulator/Power Conditioner (FCLAB-PC1).

2. Perform each visual and mechanical inspection and electrical test stated in NETA Acceptance Testing Specification. Certify compliance with test parameters.
3. Infrared Scanning: After Substantial Completion, but not more than 60 days after Final Acceptance, perform an infrared scan of each splice in conductors No. 3 AWG and larger. Remove box and equipment covers so splices are accessible to portable scanner. Correct deficiencies determined during the scan.

    a. Follow-up Infrared Scanning: Perform an additional follow-up infrared scan of each splice 11 months after date of Substantial Completion.
    b. Instrument: Use an infrared scanning device designed to measure temperature or to detect significant deviations from normal values. Provide calibration record for device.
    c. Record of Infrared Scanning: Prepare a certified report that identifies splices checked and that describes scanning results. Include notation of deficiencies detected, remedial action taken, and observations after remedial action.

D. Test and Inspection Reports: Prepare a written report to record the following:

1. Procedures used.
2. Results that comply with requirements.
3. Results that do not comply with requirements and corrective action taken to achieve compliance with requirements.

E. Cables shall be considered defective if they do not pass tests and inspections.

END OF SECTION 260519

SECTION 26 05 26
GROUNDING & BONDING FOR ELECTRICAL

PART 1 - GENERAL

1.1 SUMMARY

A. Section includes grounding and bonding systems and equipment.

B. Section includes grounding and bonding systems and equipment, plus the following special applications:

1. Underground distribution grounding.
2. Ground bonding common with lightning protection system.
3. Foundation steel electrodes.

1.2 ACTION SUBMITTALS

A. Product Data: For each type of product indicated.

1.3 INFORMATIONAL SUBMITTALS

A. As-Built Data: Plans showing dimensioned as-built locations of grounding features specified in "Field Quality Control" Article, including the following:

1. Test wells.
2. Ground rods.
3. Ground rings.
4. Grounding arrangements and connections for separately derived systems.

B. Qualification Data: For testing agency and testing agency's field supervisor.

C. Field quality-control reports.

1.4 CLOSEOUT SUBMITTALS

A. Operation and Maintenance Data: For grounding to include in emergency, operation, and maintenance manuals.

1. In addition to items specified in "Operation and Maintenance Data," include the following:

a. Instructions for periodic testing and inspection of grounding features at test wells based on NFPA 70B.

1) Tests shall determine if ground-resistance or impedance values remain within specified maximums, and instructions shall recommend corrective action if values do not.
2) Include recommended testing intervals.

1.5 QUALITY ASSURANCE

A. Testing Agency Qualifications: Member company of NETA or an NRTL.

1. Testing Agency's Field Supervisor: Certified by NETA to supervise on-site testing.

B. Electrical Components, Devices, and Accessories: Listed and labeled as defined in NFPA 70, by a qualified testing agency, and marked for intended location and application.

C. Comply with UL 467 for grounding and bonding materials and equipment.

PART 2 - PRODUCTS

2.1 MANUFACTURERS

A. Manufacturers: Subject to compliance with requirements, available manufacturers offering products that may be incorporated into the Work include, but are not limited to, the following:

B. Basis-of-Design Product: Subject to compliance with requirements, provide product indicated on Drawings or comparable product by one of the following:

1. Burndy; Part of Hubbell Electrical Systems.
2. Dossert; AFL Telecommunications LLC.
3. ERICO International Corporation.
4. Fushi Copperweld Inc.
5. Galvan Industries, Inc.; Electrical Products Division, LLC.
6. Harger Lightning and Grounding.
7. ILSCO.
8. O-Z/Gedney; A Brand of the EGS Electrical Group.
9. Robbins Lightning, Inc.
10. Siemens Power Transmission & Distribution, Inc.

2.2 SYSTEM DESCRIPTION

A. Electrical Components, Devices, and Accessories: Listed and labeled as defined in NFPA 70, by a qualified testing agency, and marked for intended location and application.

B. Comply with UL 467 for grounding and bonding materials and equipment.

2.3 CONDUCTORS

A. Insulated Conductors: Copper wire or cable insulated for 600 V unless otherwise required by applicable Code or authorities having jurisdiction.

B. Bare Copper Conductors:

1. Solid Conductors: ASTM B 3.
2. Stranded Conductors: ASTM B 8.
3. Tinned Conductors: ASTM B 33.

C. Grounding Bus: Predrilled rectangular bars of annealed copper, 1/4 by 2 inches in cross section, with 9/32-inchholes spaced 1-1/8 inches apart. Stand-off insulators for mounting shall comply with UL 891 for use in switchboards, 600 V and shall be Lexan or PVC, impulse tested at 5000 V.

2.4 CONNECTORS

A. Listed and labeled by an NRTL acceptable to authorities having jurisdiction for applications in which used and for specific types, sizes, and combinations of conductors and other items connected.

B. Bolted Connectors for Conductors and Pipes: Copper or copper alloy.

C. Welded Connectors: Exothermic-welding kits of types recommended by kit manufacturer for materials being joined and installation conditions.

D. Bus-Bar Connectors: Mechanical type, cast silicon bronze, solderless compression-type wire terminals, and long-barrel, two-bolt connection to ground bus bar.

2.5 GROUNDING ELECTRODES

A. Ground Rods: Copper-clad steel; 3/4 inch by 10 feet.

PART 3 - EXECUTION

3.1 APPLICATIONS

A. Conductors: Install solid conductor for No. 8 AWG and smaller, and stranded conductors for No. 6 AWG and larger unless otherwise indicated.

B. Underground Grounding Conductors: Install bare copper conductor, No. 2 AWG minimum.

1. Bury at least 24 inches below grade.
2. Duct-Bank Grounding Conductor: Bury 12 inches above duct bank when indicated as part of duct-bank installation.

C. Grounding Bus: Install in electrical equipment rooms, in rooms housing service equipment, and elsewhere as indicated.

1. Install bus horizontally, on insulated spacers 2 inches minimum from wall, 6 inches above finished floor unless otherwise indicated.

D. Conductor Terminations and Connections:

1. Pipe and Equipment Grounding Conductor Terminations: Bolted connectors.
2. Underground Connections: Welded connectors except at test wells and as otherwise indicated.
3. Connections to Ground Rods at Test Wells: Bolted connectors.

3.2 GROUNDING AT THE SERVICE

A. Equipment grounding conductors and grounding electrode conductors shall be connected to the ground bus. Install a main bonding jumper between the neutral and ground buses.

3.3 EQUIPMENT GROUNDING

A. Install insulated equipment grounding conductors with all feeders and branch circuits.

B. Install insulated equipment grounding conductors with the following items, in addition to those required by NFPA 70:

1. Feeders and branch circuits.
2. Lighting circuits.
3. Receptacle circuits.
4. Single-phase motor and appliance branch circuits.
5. Three-phase motor and appliance branch circuits.
6. Flexible raceway runs.
7. Armored and metal-clad cable runs.

C. Air-Duct Equipment Circuits: Install insulated equipment grounding conductor to duct-mounted electrical devices operating at 120 V and more, including air cleaners, heaters, dampers, humidifiers, and other duct electrical equipment. Bond conductor to each unit and to air duct and connected metallic piping.

D. Water Heater, Heat-Tracing, and Anti-frost Heating Cables: Install a separate insulated equipment grounding conductor to each electric water heater and heat-tracing cable. Bond conductor to heater units, piping, connected equipment, and components.

3.4 INSTALLATION

A. Grounding Conductors: Route along shortest and straightest paths possible unless otherwise indicated or required by Code. Avoid obstructing access or placing conductors where they may be subjected to strain, impact, or damage.

B. Ground Rods: Drive rods until tops are 2 inches below finished floor or final grade unless otherwise indicated.

1. Interconnect ground rods with grounding electrode conductor below grade and as otherwise indicated. Make connections without exposing steel or damaging coating if any.
2. For grounding electrode system, install at least three rods spaced at least one-rod length from each other and located at least the same distance from other grounding electrodes, and connect to the service grounding electrode conductor.

C. Test Wells: Ground rod driven through drilled hole in bottom of handhole. Handholes shall be at least 12 inches deep, with cover.

1. Test Wells: Install at least one test well for each service unless otherwise indicated. Install at the ground rod electrically closest to service entrance. Set top of test well flush with finished grade or floor.

D. Bonding Straps and Jumpers: Install in locations accessible for inspection and maintenance except where routed through short lengths of conduit.

1. Bonding to Structure: Bond straps directly to basic structure, taking care not to penetrate any adjacent parts.
2. Bonding to Equipment Mounted on Vibration Isolation Hangers and Supports: Install bonding so vibration is not transmitted to rigidly mounted equipment.
3. Use exothermic-welded connectors for outdoor locations; if a disconnect-type connection is required, use a bolted clamp.

E. Grounding and Bonding for Piping:
1. Bond each aboveground portion of fuel oil or gas piping system downstream from equipment shutoff valve.

F. Concrete-Encased Grounding Electrode (Ufer Ground): Fabricate according to NFPA 70; use a minimum of 20 feet of bare copper conductor not smaller than No. 4 AWG.

1. If concrete foundation is less than 20 feet long, coil excess conductor within base of foundation.

2. Bond grounding conductor to reinforcing steel in at least four locations and to anchor bolts. Extend grounding conductor below grade and connect to building's grounding grid or to grounding electrode external to concrete.

3.5 FIELD QUALITY CONTROL

A. Testing Agency: Engage a qualified testing agency to perform tests and inspections.

B. Manufacturer's Field Service: Engage a factory-authorized service representative to inspect, test, and adjust components, assemblies, and equipment installations, including connections.

C. Perform tests and inspections.

1. Manufacturer's Field Service: Engage a factory-authorized service representative to inspect components, assemblies, and equipment installations, including connections, and to assist in testing.

D. Tests and Inspections:

1. After installing grounding system but before permanent electrical circuits have been energized, test for compliance with requirements.
2. Inspect physical and mechanical condition. Verify tightness of accessible, bolted, electrical connections with a calibrated torque wrench according to manufacturer's written instructions.
3. Test completed grounding system at each location where a maximum ground-resistance level is specified, at service disconnect enclosure grounding terminal, at ground test wells. Make tests at ground rods before any conductors are connected.

    a. Measure ground resistance no fewer than two full days after last trace of precipitation and without soil being moistened by any means other than natural drainage or seepage and without chemical treatment or other artificial means of reducing natural ground resistance.
    b. Perform tests by fall-of-potential method according to IEEE 81.

E. Grounding system shall be considered defective if it does not pass tests and inspections.

F. Prepare test and inspection reports.

G. Report measured ground resistances that exceed the following values:

1. Power and Lighting Equipment or System with Capacity of 500 kVA and Less: 10 ohms.

H. Excessive Ground Resistance: If resistance to ground exceeds specified values, notify Engineer promptly and include recommendations to reduce ground resistance.

END OF SECTION 26 05 26

SECTION 26 05 29
HANGERS & SUPPORTS FOR ELECTRICAL

PART 1 - GENERAL

1.1 SUMMARY

A. This Section includes the following:

1. Hangers and supports for electrical equipment and systems.
2. Construction requirements for concrete bases.

1.2 DEFINITIONS

A. EMT: Electrical metallic tubing.

B. IMC: Intermediate metal conduit.

C. RMC: Rigid metal conduit.

1.3 PERFORMANCE REQUIREMENTS

A. Delegated Design: Design supports for multiple raceways, including comprehensive engineering analysis by a qualified professional engineer, using performance requirements and design criteria indicated.

B. Design supports for multiple raceways capable of supporting combined weight of supported systems and its contents.

C. Design equipment supports capable of supporting combined operating weight of supported equipment and connected systems and components.

D. Rated Strength: Adequate in tension, shear, and pullout force to resist maximum loads calculated or imposed for this Project, with a minimum structural safety factor of five times the applied force.

1.4 ACTION SUBMITTALS

A. Product Data: For the following:

1. Steel slotted support systems.

B. Shop Drawings: Show fabrication and installation details and include calculations for the following:

1. Trapeze hangers. Include Product Data for components.
2. Steel slotted channel systems. Include Product Data for components.
3. Nonmetallic slotted channel systems. Include Product Data for components.
4. Equipment supports.

1.5 INFORMATIONAL SUBMITTALS

A. Welding certificates.

1.6 QUALITY ASSURANCE

A. Welding: Qualify procedures and personnel according to AWS D1.1/D1.1M, "Structural Welding Code - Steel."

B. Comply with NFPA 70.

1.7 COORDINATION

A. Coordinate size and location of concrete bases. Cast anchor-bolt inserts into bases. Concrete, reinforcement, and formwork requirements are specified together with concrete Specifications.

PART 2 - PRODUCTS

2.1 SUPPORT, ANCHORAGE, AND ATTACHMENT COMPONENTS

A. Steel Slotted Support Systems: Comply with MFMA-4, factory-fabricated components for field assembly.

1. Available Manufacturers: Subject to compliance with requirements, manufacturers offering products that may be incorporated into the Work include, but are not limited to, the following:
2. Manufacturers: Subject to compliance with requirements, provide products by one of the following:

    a. Allied Tube & Conduit.
    b. Cooper B-Line, Inc.
    c. Thomas & Betts Corporation.
    d. Unistrut; Atkore International.
    e. Wesanco, Inc.

3. Metallic Coatings: Hot-dip galvanized after fabrication and applied according to MFMA-4.

4. Nonmetallic Coatings: Manufacturer's standard PVC, polyurethane, or polyester coating applied according to MFMA-4.
5. Painted Coatings: Manufacturer's standard painted coating applied according to MFMA-4.
6. Channel Dimensions: Selected for applicable load criteria.

B. Raceway and Cable Supports: As described in NECA 1 and NECA 101.

C. Conduit and Cable Support Devices: Galvanized steel and malleable-iron hangers, clamps, and associated fittings, designed for types and sizes of raceway or cable to be supported.

D. Support for Conductors in Vertical Conduit: Factory-fabricated assembly consisting of threaded body and insulating wedging plug or plugs for non-armored electrical conductors or cables in riser conduits. Plugs shall have number, size, and shape of conductor gripping pieces as required to suit individual conductors or cables supported. Body shall be malleable iron.

E. Structural Steel for Fabricated Supports and Restraints: ASTM A 36/A 36M, steel plates, shapes, and bars; black and galvanized.

F. Mounting, Anchoring, and Attachment Components: Items for fastening electrical items or their supports to building surfaces include the following:

1. Heavy duty stainless-steel screw anchors, for use in hardened Portland cement concrete, steel, or wood, with tension, shear, and pullout capacities appropriate for supported loads and building materials where used.

    a. Available Manufacturers: Subject to compliance with requirements, manufacturers offering products that may be incorporated into the Work include, but are not limited to, the following:
    b. Manufacturers: Subject to compliance with requirements, provide products by one of the following:

        1) Hilti, Inc.
        2) Simpson Strong-Tie Co., Inc. Titen HD or approved equal

2. Mechanical-Expansion Anchors: Insert-wedge-type, zinc-coated steel, for use in hardened portland cement concrete with tension, shear, and pullout capacities appropriate for supported loads and building materials in which used. Not allowed in areas subject to exterior conditions.

    a. Available Manufacturers: Subject to compliance with requirements, manufacturers offering products that may be incorporated into the Work include, but are not limited to, the following:
    b. Manufacturers: Subject to compliance with requirements, provide products by one of the following:

1) Cooper B-Line, Inc.
2) Empire Tool and Manufacturing Co., Inc.
3) Hilti, Inc.
4) ITW Ramset/Red Head; Illinois Tool Works, Inc.
5) MKT Fastening, LLC.

3. Concrete Inserts: Steel or malleable-iron, slotted support system units similar to MSS Type 18; complying with MFMA-4 or MSS SP-58. Use with epoxy adhesive for all anchorages on horizontal surfaces.
4. Clamps for Attachment to Steel Structural Elements: MSS SP-58, type suitable for attached structural element.
5. Through Bolts: Structural type, hex head, and high strength. Comply with ASTM A 325.
6. Toggle Bolts: All-steel springhead type.
7. Hanger Rods: Threaded steel.

2.2 FABRICATED METAL EQUIPMENT SUPPORT ASSEMBLIES

A. Description: Welded or bolted, structural-steel shapes, shop or field fabricated to fit dimensions of supported equipment.

PART 3 - EXECUTION

3.1 APPLICATION

A. Comply with NECA 1 and NECA 101 for application of hangers and supports for electrical equipment and systems except if requirements in this Section are stricter.

B. Maximum Support Spacing and Minimum Hanger Rod Size for Raceway: Space supports for EMT, IMC, and RMC as required by NFPA 70. Minimum rod size shall be 1/4 inch in diameter.

C. Multiple Raceways or Cables: Install trapeze-type supports fabricated with steel slotted or other support system, sized so capacity can be increased by at least 25 percent in future without exceeding specified design load limits.

1. Secure raceways and cables to these supports with two-bolt conduit clamps.

D. Spring-steel clamps designed for supporting single conduits without bolts may be used for 1-1/2-inchand smaller raceways serving branch circuits and communication systems above suspended ceilings and for fastening raceways to trapeze supports.

3.2 SUPPORT INSTALLATION

A. Comply with NECA 1 and NECA 101 for installation requirements except as specified in this Article.

B. Raceway Support Methods: In addition to methods described in NECA 1, EMT, IMC, and RMC may be supported by openings through structure members, as permitted in NFPA 70.

C. Strength of Support Assemblies: Where not indicated, select sizes of components so strength shall be adequate to carry present and future static loads within specified loading limits. Minimum static design load used for strength determination shall be weight of supported components plus 200 lb.

D. Mounting and Anchorage of Surface-Mounted Equipment and Components: Anchor and fasten electrical items and their supports to building structural elements by the following methods unless otherwise indicated by code:

1. .
2. To New Concrete: Bolt to concrete inserts.
3. To Masonry: Approved toggle-type bolts on hollow masonry units and expansion anchor fasteners on solid masonry units.
4. To Existing Concrete: Heavy duty stainless steel screw anchors.
5. Instead of expansion anchors, powder-actuated driven threaded studs provided with lock washers and nuts may be used in existing standard-weight concrete 4 inches thick or greater. Do not use for anchorage to lightweight-aggregate concrete or for slabs less than 4 inches thick.
6. To Steel: Welded threaded studs complying with AWS D1.1/D1.1M, with lock washers and nuts.
7. To Light Steel: Sheet metal screws.
8. Items Mounted on Hollow Walls and Nonstructural Building Surfaces: Mount cabinets, panelboards, disconnect switches, control enclosures, pull and junction boxes, transformers, and other devices on slotted-channel racks attached to substrate.

E. Drill holes for anchors in concrete at locations and to depths that avoid reinforcing bars.

3.3 INSTALLATION OF FABRICATED METAL SUPPORTS

A. Cut, fit, and place miscellaneous metal supports accurately in location, alignment, and elevation to support and anchor electrical materials and equipment.

B. Field Welding: Comply with AWS D1.1/D1.1M.

3.4 PAINTING

A. Touchup: Clean field welds and abraded areas of shop paint. Paint exposed areas immediately after erecting hangers and supports. Use same materials as used for shop painting. Comply with SSPC-PA 1 requirements for touching up field-painted surfaces.

1. Apply paint by brush or spray to provide minimum dry film thickness of 2.0 mils.

B. Touchup: Comply with requirements in Section 09 90 01 "Painting and Protective Coatings" for cleaning and touchup painting of field welds, bolted connections, and abraded areas of shop paint on miscellaneous metal.

C. Galvanized Surfaces: Clean welds, bolted connections, and abraded areas and apply galvanizing-repair paint to comply with ASTM A 780.

END OF SECTION 26 05 29

SECTION 26 05 33
RACEWAYS & BOXES FOR ELECTRICAL

PART 1 - GENERAL

1.1 SUMMARY

A. Section Includes:

1. Metal conduits, tubing, and fittings.
2. Nonmetal conduits, tubing, and fittings.
3. Metal wireways and auxiliary gutters.
4. Surface raceways.
5. Boxes, enclosures, and cabinets.
6. Handholes and boxes for exterior underground cabling.

1.2 DEFINITIONS

A. GRC: Galvanized rigid steel conduit.

B. ARC: Aluminum Rigid Metal conduit

C. FMC: Flexible metal conduit.

D. LFMC: Liquidtight Flexible metal conduit.

E. MC: Metal clad cable.

F. RNC: Rigid nonmetallic conduit.

1.3 ACTION SUBMITTALS

A. Product Data: For surface raceways, wireways and fittings, floor boxes, hinged-cover enclosures, and cabinets.

1.4 INFORMATIONAL SUBMITTALS

A. Coordination Drawings: Conduit routing plans, drawn to scale, on which the following items are shown and coordinated with each other, using input from installers of items involved:

1. Structural members in paths of conduit groups with common supports.
2. HVAC and plumbing items and architectural features in paths of conduit groups with common supports.

B. Qualification Data: For professional engineer.

C. Source quality-control reports.

PART 2 - PRODUCTS

2.1 METAL CONDUITS, TUBING, AND FITTINGS

A. Manufacturers: Subject to compliance with requirements, available manufacturers offering products that may be incorporated into the Work include, but are not limited to, the following:

1. AFC Cable Systems, Inc.
2. Allied Tube & Conduit.
3. Anamet Electrical, Inc.
4. Electri-Flex Company.
5. O-Z/Gedney.
6. Picoma Industries.
7. Republic Conduit.
8. Robroy Industries.
9. Southwire Company.
10. Thomas & Betts Corporation.
11. Western Tube and Conduit Corporation.
12. Wheatland Tube Company.

B. Listing and Labeling: Metal conduits, tubing, and fittings shall be listed and labeled as defined in NFPA 70, by a qualified testing agency, and marked for intended location and application.

C. GRC: Comply with ANSI C80.1 and UL 6.

D. ARC: Comply with ANSI C80.5 and UL 6A.

E. PVC-Coated Steel Conduit: PVC-coated rigid steel conduit.

1. Comply with NEMA RN 1.
2. Coating Thickness: 0.040 inch, minimum.

F. FMC: Comply with UL-1; aluminum.

G. LFMC: Flexible steel conduit with PVC jacket and complying with UL 360.

H. Fittings for Metal Conduit: Comply with NEMA FB 1 and UL 514B.

1. Conduit Fittings for Hazardous (Classified) Locations: Comply with UL 886 and NFPA 70.

2. Expansion Fittings: PVC or steel to match conduit type, complying with UL 651, rated for environmental conditions where installed, and including flexible external bonding jumper.
3. Coating for Fittings for PVC-Coated Conduit: Minimum thickness of 0.040 inch, with overlapping sleeves protecting threaded joints.

I. Joint Compound for GRC or ARC: Approved, as defined in NFPA 70, by authorities having jurisdiction for use in conduit assemblies, and compounded for use to lubricate and protect threaded conduit joints from corrosion and to enhance their conductivity.

2.2 NONMETALLIC CONDUITS, TUBING, AND FITTINGS

A. Manufacturers: Subject to compliance with requirements, available manufacturers offering products that may be incorporated into the Work include, but are not limited to, the following:

1. AFC Cable Systems, Inc.
2. Anamet Electrical, Inc.
3. Arnco Corporation.
4. CANTEX Inc.
5. CertainTeed Corporation.
6. Condux International, Inc.
7. Electri-Flex Company.
8. Kraloy.
9. Lamson & Sessions; Carlon Electrical Products.
10. Niedax-Kleinhuis USA, Inc.
11. RACO; Hubbell.
12. Thomas & Betts Corporation.

B. Listing and Labeling: Nonmetallic conduits, tubing, and fittings shall be listed and labeled as defined in NFPA 70, by a qualified testing agency, and marked for intended location and application.

C. RNC: Type EPC-80-PVC, complying with NEMA TC 2 and UL 651 unless otherwise indicated.

D. Fittings for RNC: Comply with NEMA TC 3; match to conduit or tubing type and material.

E. Solvent cements and adhesive primers shall have a VOC content of 510 and 550 g/L or less, respectively, when calculated according to 40 CFR 59, Subpart D (EPA Method 24).

F. Solvent cements and adhesive primers shall comply with the testing and product requirements of the California Department of Health Services' "Standard Practice for the Testing of Volatile Organic Emissions from Various Sources Using Small-Scale Environmental Chambers."

2.3 METAL WIREWAYS AND AUXILIARY GUTTERS

A. Manufacturers: Subject to compliance with requirements, available manufacturers offering products that may be incorporated into the Work include, but are not limited to, the following:

1. Cooper B-Line, Inc.
2. Hoffman.
3. Mono-Systems, Inc.
4. Square D.

B. Description: Sheet metal, complying with UL 870 and NEMA 250, Type 1 unless otherwise indicated, and sized according to NFPA 70.

1. Metal wireways installed outdoors shall be listed and labeled as defined in NFPA 70, by a qualified testing agency, and marked for intended location and application.

C. Fittings and Accessories: Include covers, couplings, offsets, elbows, expansion joints, adapters, hold-down straps, end caps, and other fittings to match and mate with wireways as required for complete system.

D. Wireway Covers: Hinged type unless otherwise indicated.

E. Finish: Manufacturer's standard enamel finish.

2.4 SURFACE RACEWAYS

A. Listing and Labeling: Surface raceways and tele-power poles shall be listed and labeled as defined in NFPA 70, by a qualified testing agency, and marked for intended location and application.

B. Surface Metal Raceways: Galvanized steel with snap-on covers complying with UL 5. Prime coated, ready for field painting.

1. Manufacturers: Subject to compliance with requirements, available manufacturers offering products that may be incorporated into the Work include, but are not limited to, the following:

a. Mono-Systems, Inc.
b. Panduit Corp.
c. Wiremold / Legrand.

2.5 BOXES, ENCLOSURES, AND CABINETS

A. Manufacturers: Subject to compliance with requirements, available manufacturers offering products that may be incorporated into the Work include, but are not limited to, the following:

1. Adalet.
2. Cooper Technologies Company; Cooper Crouse-Hinds.
3. EGS/Appleton Electric.
4. Erickson Electrical Equipment Company.
5. FSR Inc.
6. Hoffman.
7. Hubbell Incorporated.
8. Kraloy.
9. Milbank Manufacturing Co.
10. Mono-Systems, Inc.
11. O-Z/Gedney.
12. RACO; Hubbell.
13. Robroy Industries.
14. Spring City Electrical Manufacturing Company.
15. Stahlin Non-Metallic Enclosures.
16. Thomas & Betts Corporation.
17. Wiremold / Legrand.

B. General Requirements for Boxes, Enclosures, and Cabinets: Boxes, enclosures, and cabinets installed in wet locations shall be listed for use in wet locations.

C. Sheet Metal Outlet and Device Boxes: Comply with NEMA OS 1 and UL 514A.

D. Cast-Metal Outlet and Device Boxes: Comply with NEMA FB 1, ferrous alloy, Type FD, with gasketed cover.

E. Nonmetallic Outlet and Device Boxes: Comply with NEMA OS 2 and UL 514C.

F. Metal Floor Boxes:

1. Material: Cast metal.
2. Type: Fully adjustable.
3. Shape: Rectangular.
4. Listing and Labeling: Metal floor boxes shall be listed and labeled as defined in NFPA 70, by a qualified testing agency, and marked for intended location and application.

G. Luminaire Outlet Boxes: Nonadjustable, designed for attachment of luminaire weighing 50 lb. Outlet boxes designed for attachment of luminaires weighing more than 50 lb shall be listed and marked for the maximum allowable weight.

H. Small Sheet Metal Pull and Junction Boxes: NEMA OS 1.

I. Cast-Metal Access, Pull, and Junction Boxes: Comply with NEMA FB 1 and UL 1773, cast aluminum with gasketed cover.

J. Box extensions used to accommodate new building finishes shall be of same material as recessed box.

K. Device Box Dimensions: 4 inches square by 2-1/8 inches deep.

L. Gangable boxes are prohibited.

M. Hinged-Cover Enclosures: Comply with UL 50 and NEMA 250, Type 1 with continuous-hinge cover with flush latch unless otherwise indicated.

1. Metal Enclosures: Steel, finished inside and out with manufacturer's standard enamel.
2. Nonmetallic Enclosures: Plastic.
3. Interior Panels: Steel; all sides finished with manufacturer's standard enamel.

N. Cabinets:

1. NEMA 250, Type 1 galvanized-steel box with removable interior panel and removable front, finished inside and out with manufacturer's standard enamel.
2. Hinged door in front cover with flush latch and concealed hinge.
3. Key latch to match panelboards.
4. Metal barriers to separate wiring of different systems and voltage.
5. Accessory feet where required for freestanding equipment.
6. Nonmetallic cabinets shall be listed and labeled as defined in NFPA 70, by a qualified testing agency, and marked for intended location and application.

PART 3 - EXECUTION

3.1 RACEWAY APPLICATION

A. Outdoors: Apply raceway products as specified below unless otherwise indicated:

1. Exposed Conduit: GRC.
2. Concealed Conduit, Aboveground: GRC, AMC.
3. Underground Conduit: Type EPC-40-PVC, Type EPC-80-PVC, concrete encased.
4. Connection to Vibrating Equipment (Including Transformers and Hydraulic, Pneumatic, Electric Solenoid, or Motor-Driven Equipment): LFMC.
5. Boxes and Enclosures, Aboveground: NEMA 250, Type 3R, Type 4X.

B. Indoors: Apply raceway products as specified below unless otherwise indicated.

1. Exposed, Not Subject to Physical Damage: GRC, AMC.

2. Exposed and Subject to Severe Physical Damage: GRC,. Raceway locations include the following:

    a. Loading dock.
    b. Corridors used for traffic of mechanized carts, forklifts, and pallet-handling units.
    c. Mechanical rooms.

3. Concealed in Ceilings and Interior Walls and Partitions: GRC, AMC
4. Connection to Vibrating Equipment (Including Transformers and Hydraulic, Pneumatic, Electric Solenoid, or Motor-Driven Equipment): FMC, except use LFMC in damp or wet locations.
5. Damp or Wet Locations: GRC.
6. Boxes and Enclosures: NEMA 250, Type 1, except use NEMA 250, Type 4 stainless steel, nonmetallic in commercial kitchens and damp or wet locations.

C. Minimum Raceway Size: 3/4-inch trade size.

D. Raceway Fittings: Compatible with raceways and suitable for use and location.

1. Rigid and Intermediate Steel Conduit: Use threaded rigid steel conduit fittings unless otherwise indicated. Comply with NEMA FB 2.10.
2. PVC Externally Coated, Rigid Steel Conduits: Use only fittings listed for use with this type of conduit. Patch and seal all joints, nicks, and scrapes in PVC coating after installing conduits and fittings. Use sealant recommended by fitting manufacturer and apply in thickness and number of coats recommended by manufacturer.
3. Flexible Conduit: Use only fittings listed for use with flexible conduit. Comply with NEMA FB 2.20.

E. Do not install aluminum conduits, boxes, or fittings in contact with concrete or earth.

F. Install surface raceways only where indicated on Drawings.

G. Do not install nonmetallic conduit where ambient temperature exceeds 120 deg F.

3.2 INSTALLATION

A. Comply with NECA 1 and NECA 101 for installation requirements except where requirements on Drawings or in this article are stricter. Comply with NECA 102 for aluminum conduits. Comply with NFPA 70 limitations for types of raceways allowed in specific occupancies and number of floors.

B. Keep raceways at least 6 inches away from parallel runs of flues and steam or hot-water pipes. Install horizontal raceway runs above water and steam piping.

C. Complete raceway installation before starting conductor installation.

D. Comply with requirements in Section 16073 "Hangers and Supports for Electrical Systems" for hangers and supports.

E. Arrange stub-ups so curved portions of bends are not visible above finished slab.

F. Install no more than the equivalent of three 90-degree bends in any conduit run except for control wiring conduits, for which fewer bends are allowed. Support within 12 inches of changes in direction.

G. Conceal conduit within finished walls, ceilings, and floors unless otherwise indicated. Install conduits parallel or perpendicular to building lines.

H. Support conduit within 12 inches of enclosures to which attached.

I. Raceways Embedded in Slabs:

1. Run conduit larger than 1-inch trade size, parallel or at right angles to main reinforcement. Where at right angles to reinforcement, place conduit close to slab support. Secure raceways to reinforcement at maximum 10-footintervals.
2. Arrange raceways to cross building expansion joints at right angles with expansion fittings.
3. Arrange raceways to keep a minimum of 2 inches of concrete cover in all directions.
4. Do not embed threadless fittings in concrete unless specifically approved by Architect for each specific location.
5. Change from RNC to GRC before rising above floor.

J. Stub-ups to Above Recessed Ceilings:

1. Use GRC or ARC for raceways.
2. Use a conduit bushing or insulated fitting to terminate stub-ups not terminated in hubs or in an enclosure.

K. Threaded Conduit Joints, Exposed to Wet, Damp, Corrosive, or Outdoor Conditions: Apply listed compound to threads of raceway and fittings before making up joints. Follow compound manufacturer's written instructions.

L. Coat field-cut threads on PVC-coated raceway with a corrosion-preventing conductive compound prior to assembly.

M. Raceway Terminations at Locations Subject to Moisture or Vibration: Use insulating bushings to protect conductors including conductors smaller than No. 4 AWG.

N. Terminate threaded conduits into threaded hubs or with locknuts on inside and outside of boxes or cabinets. Install bushings on conduits up to 1-1/4-inch trade size and

insulated throat metal bushings on 1-1/2-inch trade size and larger conduits terminated with locknuts. Install insulated throat metal grounding bushings on service conduits.

O. Install raceways square to the enclosure and terminate at enclosures with locknuts. Install locknuts hand tight plus 1/4 turn more.

P. Do not rely on locknuts to penetrate nonconductive coatings on enclosures. Remove coatings in the locknut area prior to assembling conduit to enclosure to assure a continuous ground path.

Q. Cut conduit perpendicular to the length. For conduits 2-inch trade size and larger, use roll cutter or a guide to make cut straight and perpendicular to the length.

R. Install pull wires in empty raceways. Use polypropylene or monofilament plastic line with not less than 200-lb tensile strength. Leave at least 12 inches of slack at each end of pull wire. Cap underground raceways designated as spare above grade alongside raceways in use.

S. Surface Raceways:

1. Install surface raceway with a minimum 2-inchradius control at bend points.
2. Secure surface raceway with screws or other anchor-type devices at intervals not exceeding 48 inches and with no less than two supports per straight raceway section. Support surface raceway according to manufacturer's written instructions. Tape and glue are not acceptable support methods.

T. Install raceway sealing fittings at accessible locations according to NFPA 70 and fill them with listed sealing compound. For concealed raceways, install each fitting in a flush steel box with a blank cover plate having a finish similar to that of adjacent plates or surfaces. Install raceway sealing fittings according to NFPA 70.

U. Install devices to seal raceway interiors at accessible locations. Locate seals so no fittings or boxes are between the seal and the following changes of environments. Seal the interior of all raceways at the following points:

1. Where conduits pass from warm to cold locations, such as boundaries of refrigerated spaces.
2. Where an underground service raceway enters a building or structure.
3. Where otherwise required by NFPA 70.

V. Comply with manufacturer's written instructions for solvent welding RNC and fittings.

W. Expansion-Joint Fittings:

1. Install in each run of aboveground RNC that is located where environmental temperature change may exceed 30 deg F and that has straight-run length that exceeds 25 feet. Install in each run of aboveground RMC and ARC conduit that is

located where environmental temperature change may exceed 100 deg F and that has straight-run length that exceeds 100 feet.

2. Install type and quantity of fittings that accommodate temperature change listed for each of the following locations:

    a. Outdoor Locations Not Exposed to Direct Sunlight: 125 deg F temperature change.
    b. Outdoor Locations Exposed to Direct Sunlight: 155 deg F temperature change.
    c. Indoor Spaces Connected with Outdoors without Physical Separation: 125 deg F temperature change.
    d. Attics: 135 deg F temperature change.

3. Install fitting(s) that provide expansion and contraction for at least 0.00041 inch per foot of length of straight run per deg F of temperature change for PVC conduits. Install fitting(s) that provide expansion and contraction for at least 0.000078 inch per foot of length of straight run per deg F of temperature change for metal conduits.
4. Install expansion fittings at all locations where conduits cross building or structure expansion joints.
5. Install each expansion-joint fitting with position, mounting, and piston setting selected according to manufacturer's written instructions for conditions at specific location at time of installation. Install conduit supports to allow for expansion movement.

X. Flexible Conduit Connections, FMC or LFMC: Comply with NEMA RV 3. Use a maximum of 72 inches of flexible conduit for recessed and semi-recessed luminaires, equipment subject to vibration, noise transmission, or movement; and for transformers and motors.

Y. Mount boxes at heights indicated on Drawings. If mounting heights of boxes are not individually indicated, give priority to ADA requirements. Install boxes with height measured to center of box unless otherwise indicated.

Z. Recessed Boxes in Masonry Walls: Saw-cut opening for box in center of cell of masonry block, and install box flush with surface of wall. Prepare block surfaces to provide a flat surface for a rain-tight connection between box and cover plate or supported equipment and box.

AA. Horizontally separate boxes mounted on opposite sides of walls so they are not in the same vertical channel.

BB. Locate boxes so that cover or plate shall not span different building finishes.

CC. Support boxes of three gangs or more from more than one side by spanning two framing members or mounting on brackets specifically designed for the purpose.

DD. Fasten junction and pull boxes to or support from building structure. Do not support boxes by conduits.

EE. Set metal floor boxes level and flush with finished floor surface.

3.3 INSTALLATION OF UNDERGROUND CONDUIT

A. Direct-Buried Conduit:

1. Excavate trench bottom to provide firm and uniform support for conduit. Prepare trench bottom as specified in Section 31 20 00 "Earthwork" for pipe less than 6 inches in nominal diameter.
2. Install backfill as specified in Section 31 20 00 "Earthwork."
3. After installing conduit, backfill and compact. Start at tie-in point, and work toward end of conduit run, leaving conduit at end of run free to move with expansion and contraction as temperature changes during this process. Firmly hand tamp backfill around conduit to provide maximum supporting strength. After placing controlled backfill to within 12 inches of finished grade, make final conduit connection at end of run and complete backfilling with normal compaction as specified in Section 31 20 00 "Earthwork."
4. Install manufactured duct elbows for stub-ups at poles and equipment and at building entrances through floor unless otherwise indicated. Encase elbows for stub-up ducts throughout length of elbow.
5. Install manufactured rigid steel conduit elbows for stub-ups at poles and equipment and at building entrances through floor.

    a. Couple steel conduits to ducts with adapters designed for this purpose, and encase coupling with 3 inches of concrete for a minimum of 12 inches on each side of the coupling.
    b. For stub-ups at equipment mounted on outdoor concrete bases and where conduits penetrate building foundations, extend steel conduit horizontally a minimum of 60 inches from edge of foundation or equipment base. Install insulated grounding bushings on terminations at equipment.

6. Warning Planks: Bury warning planks approximately 12 inches above direct-buried conduits but a minimum of 6 inches below grade. Align planks along centerline of conduit.
7. Underground Warning Tape: Comply with requirements in Section 26 05 53 " Identification of Electrical Systems."

3.4 SLEEVE AND SLEEVE-SEAL INSTALLATION FOR ELECTRICAL PENETRATIONS

A. Install sleeves and sleeve seals at penetrations of exterior floor and wall assemblies. Comply with requirements in Section 26 05 44 Sleeves and Sleeve Seals for Electrical Raceways and Cabling."

3.5 PROTECTION

A. Protect coatings, finishes, and cabinets from damage and deterioration.

1. Repair damage to galvanized finishes with zinc-rich paint recommended by manufacturer.
2. Repair damage to PVC coatings or paint finishes with matching touchup coating recommended by manufacturer.

END OF SECTION 26 05 33

SECTION 26 05 44
SLEEVES AND SLEEVE SEALS FOR ELECTRICAL RACEWAYS AND CABLING

PART 1 - GENERAL

1.1 SUMMARY

A. Section Includes:

1. Round sleeves.
2. Rectangular sleeves.
3. Sleeve-seal systems.
4. Sleeve-seal fittings.
5. Grout.
6. Pourable sealants.
7. Foam sealants.

B. Related Requirements:

1. Section 260010 "Supplemental Requirements for Electrical" for additional abbreviations, definitions, submittals, qualifications, testing agencies, and other Project requirements applicable to Work specified in this Section.

1.2 ACTION SUBMITTALS

A. Product Data: For each type of product.

PART 2 - PRODUCTS

2.1 ROUND SLEEVES

A. Steel Wall Sleeves:
1. General Characteristics: ASTM A53/A53M, Type E, Grade B, Schedule 40, zinc coated, plain ends and integral waterstop.

2.2 GROUT

A. General Characteristics: Nonshrink; recommended for interior and exterior sealing openings in non-fire-rated walls or floors.

1. Standard: ASTM C1107/C1107M, Grade B, post-hardening and volume-adjusting, dry, hydraulic-cement grout.
2. Design Mix: 5000 psi, 28-day compressive strength.
3. Packaging: Premixed and factory packaged.

2.3 POURABLE SEALANTS

A. Performance Criteria:

1. General Characteristics: Single-component, neutral-curing elastomeric sealants of grade indicated below.

a. Grade: Pourable (self-leveling) formulation for openings in floors and other horizontal surfaces that are not fire rated.

2.4 FOAM SEALANTS

A. Performance Criteria:

1. General Characteristics: Multicomponent, liquid elastomers that, when mixed, expand and cure in place to produce a flexible, nonshrinking foam. Foam expansion shall not damage cables or crack penetrated structure.

PART 3 - EXECUTION

3.1 INSTALLATION OF SLEEVES FOR NON-FIRE-RATED ELECTRICAL PENETRATIONS

A. Sleeves for Conduits Penetrating Above-Grade, Non-Fire-Rated, Concrete and Masonry-Unit Floors and Walls:

1. Interior Penetrations of Non-Fire-Rated Walls and Floors:

a. Seal space outside of sleeves with mortar or grout. Pack sealing material solidly between sleeve and wall or floor so no voids remain. Tool exposed surfaces smooth; protect material while curing.
b. Seal annular space between sleeve and raceway or cable, using joint sealant appropriate for size, depth, and location of joint.

2. Use pipe sleeves unless penetration arrangement requires rectangular sleeved opening.
3. Size pipe sleeves to provide 1/4-inch annular clear space between sleeve and raceway or cable, unless sleeve-seal system is to be installed.
4. Install sleeves for wall penetrations unless core-drilled holes or formed openings are used. Install sleeves during erection of walls. Cut sleeves to length for mounting flush with both surfaces of walls. Deburr after cutting.

B. Sleeves for Conduits Penetrating Non-Fire-Rated Wall Assemblies:

1. Use circular metal sleeves unless penetration arrangement requires rectangular sleeved opening.
2. Seal space outside of sleeves with approved joint compound for wall assemblies.

C. Aboveground, Exterior-Wall Penetrations: Seal penetrations using steel pipe sleeves and mechanical sleeve-seal systems. Size sleeves to allow for 1 inch annular clear space between pipe and sleeve for installing mechanical sleeve seals.

END OF SECTION 26 05 44

SECTION 26 05 53
IDENTIFICATION FOR ELECTRICAL SYSTEMS

PART 1 - GENERAL

1.1 SUMMARY

A. Section Includes:

1. Identification for raceways.
2. Identification of power and control cables.
3. Identification for conductors.
4. Underground-line warning tape.
5. Warning labels and signs.
6. Instruction signs.
7. Equipment identification labels.
8. Miscellaneous identification products.

1.2 ACTION SUBMITTALS

A. Product Data: For each electrical identification product indicated.

1.3 QUALITY ASSURANCE

A. Comply with ANSI A13.1.

B. Comply with NFPA 70.

C. Comply with 29 CFR 1910.144 and 29 CFR 1910.145.

D. Comply with ANSI Z535.4 for safety signs and labels.

E. Adhesive-attached labeling materials, including label stocks, laminating adhesives, and inks used by label printers, shall comply with UL 969.

1.4 COORDINATION

A. Coordinate identification names, abbreviations, colors, and other features with requirements in other Sections requiring identification applications, Drawings, Shop Drawings, manufacturer's wiring diagrams, and the Operation and Maintenance Manual; and with those required by codes, standards, and 29 CFR 1910.145. Use consistent designations throughout Project.

B. Coordinate installation of identifying devices with completion of covering and painting of surfaces where devices are to be applied.

C. Coordinate installation of identifying devices with location of access panels and doors.

D. Install identifying devices before installing acoustical ceilings and similar concealment.

PART 2 - PRODUCTS

2.1 POWER AND CONTROL RACEWAY IDENTIFICATION MATERIALS

A. Comply with ANSI A13.1 for minimum size of letters for legend and for minimum length of color field for each raceway size.

B. Colors for Raceways Carrying Circuits at 600 V or Less:

1. Black letters on an orange field.
2. Legend: Indicate voltage and system or service type.

C. Colors for Raceways Carrying Circuits at More Than 600 V:

1. Black letters on an orange field.
2. Legend: "DANGER CONCEALED HIGH VOLTAGE WIRING."

D. Vinyl Labels for Raceways Carrying Circuits at 600 V or Less: Preprinted, flexible label laminated with a clear, weather- and chemical-resistant coating and matching wraparound clear adhesive tape for securing ends of legend label.

E. Snap-Around Labels for Raceways Carrying Circuits at 600 V or Less: Slit, pre-tensioned, flexible, preprinted, color-coded acrylic sleeve, with diameter sized to suit diameter of raceway or cable it identifies and to stay in place by gripping action.

F. Snap-Around, Color-Coding Bands for Raceways Carrying Circuits at 600 V or Less: Slit, pre-tensioned, flexible, solid-colored acrylic sleeve, 2 inches long, with diameter sized to suit diameter of raceway or cable it identifies and to stay in place by gripping action.

G. Tape and Stencil for Raceways Carrying Circuits More Than 600 V: 4-inch-wide black stripes on 10-inchcenters diagonally over orange background that extends full length of raceway or duct and is 12 inches wide. Stop stripes at legends.

H. Metal Tags: Brass or aluminum, 2 by 2 by 0.05 inch, with stamped legend, punched for use with self-locking cable tie fastener.

I. Write-On Tags: Polyester tag, 0.015 inch thick, with corrosion-resistant grommet and cable tie for attachment to conductor or cable.

1. Marker for Tags: Permanent, waterproof, black ink marker recommended by tag manufacturer.
2. Marker for Tags: Machine-printed, permanent, waterproof, black ink marker recommended by printer manufacturer.

2.2 POWER AND CONTROL CABLE IDENTIFICATION MATERIALS

A. Comply with ANSI A13.1 for minimum size of letters for legend and for minimum length of color field for each cable size.

B. Vinyl Labels: Preprinted, flexible label laminated with a clear, weather- and chemical-resistant coating and matching wraparound clear adhesive tape for securing ends of legend label.

C. Self-Adhesive, Self-Laminating Polyester Labels: Preprinted, 3-mil-thick flexible label with acrylic pressure-sensitive adhesive that provides a clear, weather- and chemical-resistant, self-laminating, protective shield over the legend. Labels sized to fit the cable diameter such that the clear shield overlaps the entire printed legend.

D. Heat-Shrink Preprinted Tubes: Flame-retardant polyolefin tube with machine-printed identification label. Sized to suit diameter of and shrinks to fit firmly around cable it identifies. Full shrink recovery at a maximum of 200 degrees F. Comply with UL 224.

E. Metal Tags: Brass or aluminum, 2 by 2 by 0.05 inch, with stamped legend, punched for use with self-locking cable tie fastener.

F. Write-On Tags: Polyester tag, 0.015 inch thick, with corrosion-resistant grommet and cable tie for attachment to conductor or cable.

1. Marker for Tags: Permanent, waterproof, black ink marker recommended by tag manufacturer.
2. Marker for Tags: Machine-printed, permanent, waterproof, black ink marker recommended by printer manufacturer.

G. Snap-Around Labels: Slit, pretensioned, flexible, preprinted, color-coded acrylic sleeve, with diameter sized to suit diameter of cable it identifies and to stay in place by gripping action.

H. Snap-Around, Color-Coding Bands: Slit, pretensioned, flexible, solid-colored acrylic sleeve, 2 inches long, with diameter sized to suit diameter of cable it identifies and to stay in place by gripping action.

2.3 CONDUCTOR IDENTIFICATION MATERIALS

A. Color-Coding Conductor Tape: Colored, self-adhesive vinyl tape not less than 3 mils thick by 1 to 2 inches wide.

B. Self-Adhesive, Self-Laminating Polyester Labels: Preprinted, 3-mil-thick flexible label with acrylic pressure-sensitive adhesive that provides a clear, weather- and chemical-resistant, self-laminating, protective shield over the legend. Labels sized to fit the conductor diameter such that the clear shield overlaps the entire printed legend.

C. Snap-Around Labels: Slit, pretensioned, flexible, preprinted, color-coded acrylic sleeve, with diameter sized to suit diameter of conductor it identifies and to stay in place by gripping action.

D. Snap-Around, Color-Coding Bands: Slit, pretensioned, flexible, solid-colored acrylic sleeve with diameter sized to suit diameter of conductor it identifies and to stay in place by gripping action.

E. Heat-Shrink Preprinted Tubes: Flame-retardant polyolefin tube with machine-printed identification label. Sized to suit diameter of and shrinks to fit firmly around conductor it identifies. Full shrink recovery at a maximum of 200 degrees F. Comply with UL 224.

F. Marker Tapes: Vinyl or vinyl-cloth, self-adhesive wraparound type, with circuit identification legend machine printed by thermal transfer or equivalent process.

G. Write-On Tags: Polyester tag, 0.015 inch thick, with corrosion-resistant grommet and cable tie for attachment to conductor or cable.

1. Marker for Tags: Permanent, waterproof, black ink marker recommended by tag manufacturer.
2. Labels for Tags: Self-adhesive label, machine-printed with permanent, waterproof, black ink recommended by printer manufacturer, sized for attachment to tag.

2.4 FLOOR MARKING TAPE

A. 2-inch-wide, 5-milpressure-sensitive vinyl tape, with yellow and black stripes and clear vinyl overlay.

2.5 WARNING LABELS AND SIGNS

A. Comply with NFPA 70 and 29 CFR 1910.145.

B. Self-Adhesive Warning Labels: Factory-printed, multicolor, pressure-sensitive adhesive labels, configured for display on front cover, door, or other access to equipment unless otherwise indicated.

C. Baked-Enamel Warning Signs:

1. Preprinted aluminum signs, punched or drilled for fasteners, with colors, legend, and size required for application.

2. 1/4-inchgrommets in corners for mounting.
3. Nominal size, 7 by 10 inches.

D. Metal-Backed, Butyrate Warning Signs:

1. Weather-resistant, nonfading, preprinted, cellulose-acetate butyrate signs with 0.0396-inchgalvanized-steel backing; and with colors, legend, and size required for application.
2. 1/4-inchgrommets in corners for mounting.
3. Nominal size, 10 by 14 inches.

E. Warning label and sign shall include, but are not limited to, the following legends:

1. Multiple Power Source Warning: "DANGER - ELECTRICAL SHOCK HAZARD - EQUIPMENT HAS MULTIPLE POWER SOURCES."
2. Workspace Clearance Warning: "WARNING - OSHA REGULATION - AREA IN FRONT OF ELECTRICAL EQUIPMENT SHALL BE KEPT CLEAR FOR 36 INCHES."

2.6 INSTRUCTION SIGNS

A. Engraved, laminated acrylic or melamine plastic, minimum 1/16 inch thick for signs up to 20 sq. inches and 1/8 inch thick for larger sizes.

1. Engraved legend with black letters on white face.
2. Punched or drilled for mechanical fasteners.
3. Framed with mitered acrylic molding and arranged for attachment at applicable equipment.

B. Adhesive Film Label: Machine printed, in black, by thermal transfer or equivalent process. Minimum letter height shall be 3/8 inch.

C. Adhesive Film Label with Clear Protective Overlay: Machine printed, in black, by thermal transfer or equivalent process. Minimum letter height shall be 3/8 inch. Overlay shall provide a weatherproof and UV-resistant seal for label.

2.7 EQUIPMENT IDENTIFICATION LABELS

A. Adhesive Film Label: Machine printed, in black, by thermal transfer or equivalent process. Minimum letter height shall be 3/8 inch.

B. Adhesive Film Label with Clear Protective Overlay: Machine printed, in black, by thermal transfer or equivalent process. Minimum letter height shall be 3/8 inch. Overlay shall provide a weatherproof and UV-resistant seal for label.

C. Self-Adhesive, Engraved, Laminated Acrylic or Melamine Label: Adhesive backed, with white letters on a dark-gray background. Minimum letter height shall be 3/8 inch.

D. Engraved, Laminated Acrylic or Melamine Label: Punched or drilled for screw mounting. White letters on a dark-gray background. Minimum letter height shall be 3/8 inch.

E. Stenciled Legend: In nonfading, waterproof, black ink or paint. Minimum letter height shall be 1 inch.

2.8 CABLE TIES

A. General-Purpose Cable Ties: Fungus inert, self-extinguishing, one piece, self-locking, Type 6/6 nylon.

1. Minimum Width: 3/16 inch.
2. Tensile Strength at 73 deg F, According to ASTM D 638: 12,000 psi.
3. Temperature Range: Minus 40 to plus 185 deg F.
4. Color: Black except where used for color-coding.

B. UV-Stabilized Cable Ties: Fungus inert, designed for continuous exposure to exterior sunlight, self-extinguishing, one piece, self-locking, Type 6/6 nylon.

1. Minimum Width: 3/16 inch.
2. Tensile Strength at 73 deg F, According to ASTM D 638: 12,000 psi.
3. Temperature Range: Minus 40 to plus 185 deg F.
4. Color: Black.

C. Plenum-Rated Cable Ties: Self-extinguishing, UV stabilized, one piece, self-locking.

1. Minimum Width: 3/16 inch.
2. Tensile Strength at 73 deg F, According to ASTM D 638: 7000 psi.
3. UL 94 Flame Rating: 94V-0.
4. Temperature Range: Minus 50 to plus 284 deg F.
5. Color: Black.

2.9 MISCELLANEOUS IDENTIFICATION PRODUCTS

A. Paint: Comply with requirements in painting Sections for paint materials and application requirements. Select paint system applicable for surface material and location (exterior or interior).

B. Fasteners for Labels and Signs: Self-tapping, stainless-steel screws or stainless-steel machine screws with nuts and flat and lock washers.

PART 3 - EXECUTION

3.1 INSTALLATION

A. Verify identity of each item before installing identification products.

B. Location: Install identification materials and devices at locations for most convenient viewing without interference with operation and maintenance of equipment.

C. Apply identification devices to surfaces that require finish after completing finish work.

D. Self-Adhesive Identification Products: Clean surfaces before application, using materials and methods recommended by manufacturer of identification device.

E. Attach signs and plastic labels that are not self-adhesive type with mechanical fasteners appropriate to the location and substrate.

F. Attach plastic raceway and cable labels that are not self-adhesive type with clear vinyl tape with adhesive appropriate to the location and substrate.

G. System Identification Color-Coding Bands for Raceways and Cables: Each color-coding band shall completely encircle cable or conduit. Place adjacent bands of two-color markings in contact, side by side. Locate bands at changes in direction, at penetrations of walls and floors, at 50-footmaximum intervals in straight runs, and at 25-footmaximum intervals in congested areas.

H. Aluminum Wraparound Marker Labels and Metal Tags: Secure tight to surface of conductor or cable at a location with high visibility and accessibility.

I. Cable Ties: For attaching tags. Use general-purpose type, except as listed below:

1. Outdoors: UV-stabilized nylon.
2. In Spaces Handling Environmental Air: Plenum rated.

J. Painted Identification: Comply with requirements in painting Sections for surface preparation and paint application.

3.2 IDENTIFICATION SCHEDULE

A. Accessible Raceways and Metal-Clad Cables, 600 V or Less, for Service, Feeder, and Branch Circuits More Than 30 A, and 120 V to ground: Identify with self-adhesive vinyl label. Install labels at 10-foot maximum intervals.

B. Accessible Raceways and Cables within Buildings: Identify the covers of each junction and pull box of the following systems with self-adhesive vinyl labels with the wiring system legend and system voltage. System legends shall be as follows:

1. Emergency Power.
2. Power.
3. UPS.

C. Power-Circuit Conductor Identification, 600 V or Less: For conductors in vaults, pull and junction boxes, manholes, and handholes, use color-coding conductor tape to identify the phase.

1. Color-Coding for Phase and Voltage Level Identification, 600 V or Less: Use colors listed below for ungrounded service feeder and branch-circuit conductors.

a. Color shall be factory applied or field applied for sizes larger than No. 8 AWG, if authorities having jurisdiction permit.
b. Colors for 208/120-V Circuits:

1) Phase A: Black.
2) Phase B: Red.
3) Phase C: Blue.

c. Colors for 480/277-V Circuits:

1) Phase A: Brown.
2) Phase B: Orange.
3) Phase C: Yellow.

d. Field-Applied, Color-Coding Conductor Tape: Apply in half-lapped turns for a minimum distance of 6 inches from terminal points and in boxes where splices or taps are made. Apply last two turns of tape with no tension to prevent possible unwinding. Locate bands to avoid obscuring factory cable markings.

D. Install instructional sign including the color code for grounded and ungrounded conductors using adhesive-film-type labels.

E. Control-Circuit Conductor Identification: For conductors and cables in pull and junction boxes, manholes, and handholes, use self-adhesive vinyl labels with the conductor or cable designation, origin, and destination.

F. Control-Circuit Conductor Termination Identification: For identification at terminations provide self-adhesive vinyl labels with the conductor designation.

G. Conductors to Be Extended in the Future: Attach write-on tags to conductors and list source.

H. Auxiliary Electrical Systems Conductor Identification: Identify field-installed alarm, control, and signal connections.

1. Identify conductors, cables, and terminals in enclosures and at junctions, terminals, and pull points. Identify by system and circuit designation.
2. Use system of marker tape designations that is uniform and consistent with system used by manufacturer for factory-installed connections.
3. Coordinate identification with Project Drawings, manufacturer's wiring diagrams, and the Operation and Maintenance Manual.

I. Locations of Underground Lines: Identify with underground-line warning tape for power, lighting, communication, and control wiring and optical fiber cable.

1. Limit use of underground-line warning tape to direct-buried cables.
2. Install underground-line warning tape for both direct-buried cables and cables in raceway.

J. Workspace Indication: Install floor marking tape to show working clearances in the direction of access to live parts. Workspace shall be as required by NFPA 70 and 29 CFR 1926.403 unless otherwise indicated. Do not install at flush-mounted panelboards and similar equipment in finished spaces.

K. Warning Labels for Indoor Cabinets, Boxes, and Enclosures for Power and Lighting: Self-adhesive warning labels.

1. Comply with 29 CFR 1910.145.
2. Identify system voltage with black letters on an orange background.
3. Apply to exterior of door, cover, or other access.
4. For equipment with multiple power or control sources, apply to door or cover of equipment including, but not limited to, the following:

    a. Power transfer switches.
    b. Controls with external control power connections.

L. Operating Instruction Signs: Install instruction signs to facilitate proper operation and maintenance of electrical systems and items to which they connect. Install instruction signs with approved legend where instructions are needed for system or equipment operation.

M. Emergency Operating Instruction Signs: Install instruction signs with white legend on a red background with minimum 3/8-inch-high letters for emergency instructions at equipment used for UPS System.

N. Equipment Identification Labels: On each unit of equipment, install unique designation label that is consistent with wiring diagrams, schedules, and the Operation and Maintenance Manual. Apply labels to disconnect switches and protection equipment, central or master units, control panels, control stations, terminal cabinets, and racks of each system. Systems include power, lighting, control, communication, signal, monitoring, and alarm systems unless equipment is provided with its own identification.

1. Labeling Instructions:

a. Indoor Equipment: Self-adhesive, engraved, laminated acrylic or melamine label. Unless otherwise indicated, provide a single line of text with 1/2-inch-high letters on 1-1/2-inch-high label; where two lines of text are required, use labels 2 inches high.
b. Outdoor Equipment: Engraved, laminated acrylic or melamine label.
c. Elevated Components: Increase sizes of labels and letters to those appropriate for viewing from the floor.
d. Unless provided with self-adhesive means of attachment, fasten labels with appropriate mechanical fasteners that do not change the NEMA or NRTL rating of the enclosure.

2. Equipment to Be Labeled:

a. Panelboards: Typewritten directory of circuits in the location provided by panelboard manufacturer. Panelboard identification shall be self-adhesive, engraved, laminated acrylic or melamine label.
b. Enclosures and electrical cabinets.
c. Access doors and panels for concealed electrical items.
d. Transformers: Label that includes tag designation shown on Drawings for the transformer, feeder, and panelboards or equipment supplied by the secondary.
e. Substations.
f. Enclosed switches.
g. Enclosed circuit breakers.
h. Enclosed controllers.
i. Variable-speed controllers.
j. Push-button stations.
k. Power transfer equipment.
l. Contactors.
m. Remote-controlled switches, dimmer modules, and control devices.
n. Battery-inverter units.
o. Battery racks.
p. Power-generating units.
q. Monitoring and control equipment.
r. UPS equipment.

END OF SECTION 26 05 53

SECTION 26 26 13
LOW VOLTAGE AC INDUCTION MOTORS

PART 1 GENERAL

1.01 SUMMARY

A. This section applies to motors specified within a motor-driven equipment specification package. Application, horsepower, enclosure type, mounting, shaft type, synchronous speed, and any deviations from this Specification will be listed in the equipment specification. Where such deviations occur, they shall take precedence over this section.

B. Compliance with this Specification does not relieve Supplier of the responsibility for furnishing motors of proper design and mechanically suited to meet operating guarantees at the specified service conditions.

C. Proposed design features having less than two years operating experience in similar service shall be specifically listed, and details provided for Purchaser review.

D. Related Sections:

1. Section 01 33 00, Submittal Procedures.
2. Section 01 58 53, Project Equipment Identification.
3. Section 01 61 00, Common Product Requirements.
4. Section 23 12 13, Fuel Oil Transfer Equipment.
5. Section 23 13 13 33, Fuel Oil Forwarding Pump Skid.
6. Section 26 00 00, Electrical General Requirements.
7. Section 26 00 10, Electrical Summary of Work.

1.02 REFERENCES

A. The following is a list of standards which may be referenced in this section:

1. Institute of Electrical and Electronics Engineers, Inc. (IEEE):
    a. 112, Standard Test Procedure for Polyphase Induction Motors and Generators.
    b. 841, Standard for Petroleum and Chemical Industry – Severe Duty Totally Enclosed Fan-Cooled (TEFC) Squirrel Cage Induction Motors – up to and including 500 hp.
2. National Electrical Manufacturers Association (NEMA):
    a. MG 1, Motors and Generators.
    b. MG 2, Safety Standard and Guide for Selection, Installation and Use of Electric Motors and Generators.

3. American Bearing Manufacturer's Association (ABMA):
   a. 9, Load Ratings and Fatigue Life for Ball Bearings.
   b. 11, Load Ratings and Fatigue Life of Roller Bearings.
4. American National Standards Institute (ANSI): C50.41, Polyphase Induction Motors for Power Generating Stations.
5. National Fire Protection Association (NFPA): 70, National Electric Code.
6. UL:
   a. 674, Standards for Safety – Electric Motors for use in Hazardous (Classified) Locations.
   b. 1004, Standard for Safety – Rotating Electrical Machines.

1.03 SUBMITTALS

A. Documentation shall be submitted in accordance with Section 01 33 00, Submittal Procedures. In addition to the documents required by Section 01 33 00, Submittal Procedures, supply engineering data as listed below:

1. Completed motor data sheet attached to this Specification for each motor supplied.
2. Standard motor data submittals including safety stall times.
3. Outline drawings, Preliminary and Certified.
4. Performance curves (speed-torque at 100 percent and 80 percent voltage).
5. Speed-current / acceleration curves at 100 percent and 80 percent voltage.
6. Stator and rotor thermal damage curve.
7. Wiring Diagram.
8. Installation Instructions.
9. Operating and Maintenance Manual.
10. Test Reports.

B. When datasheets, O&M manuals brochures etc. are submitted and cover multiple model numbers and/or options the contractor shall highlight the specific items and options being submitted.

1.04 QUALITY ASSURANCE

A. A quality assurance program is required, summarized in a quality assurance manual and supported by written procedures for controlling activities affecting quality, such as welding, heat treatment and nondestructive examination.

B. Manufacturing/assembly facilities shall be accessible for inspection, audit and/or witness of work, inspections and tests.

C. The equipment furnished shall be guaranteed to conform to the requirements set forth and to the specified Codes, Standards and Regulations, and that all specified tests have been satisfactorily completed.

1.05 WARRANTY AND GUARANTEES

A. Furnish Manufacturer's extended guarantee or warranty with Owner named as beneficiary in writing as special guarantee.

B. The Manufacturer shall warrant that the equipment shall be supplied in accordance with these Specifications and shall perform as described herein.

C. The Manufacturer shall warrant that the equipment provided shall be free from defects in materials and workmanship for a period of 12 months after acceptance by Owner.

D. The Manufacturer shall repair or provide a replacement for any defective component under the warranty provided that any such defect was not the result of misuse of the equipment by the Owner or the Owner's representative. The Manufacturer must be able to provide Owner with training and support service during the first year of operation.

PART 2 PRODUCTS

2.01 GENERAL

A. Acceptable Suppliers listed below (or Approved Alternates):

1. ABB.
2. Baldor.
3. GE.
4. Hitachi.
5. Siemens.
6. TECO Westinghouse.
7. Toshiba.
8. WEG.

B. Submit Product Data for each piece of electrical equipment provided.

C. For multiple units of the same type of equipment, furnish identical motors and accessories of a single manufacturer.

D. The Supplier shall be responsible for fully coordinating the design and construction of the motors with the mounting arrangement, connection, bearing requirements, end play, direction of rotation, vibration and other applicable requirements of the driven equipment.

E. All motors shall comply with NEMA MG-1 requirements unless otherwise specified herein.

2.02 HORSEPOWER RATING

A. As designated in motor-driven equipment specifications.

B. The motor rating, when multiplied by the service factor, shall be at least 15 percent greater than the maximum brake horsepower required by the driven equipment. Motors where subject to test block design basis shall be rated based on Test Block Condition.

C. For pumps the motor service factor may be used for determining motor size for end of curve conditions.

2.03 SERVICE FACTOR

A. All motors shall have 1.15 service factor.

B. When a service factor greater than 1.0 is provided, motor's nameplate hp rating shall be determined without taking advantage of the service factor, even for short durations.

2.04 AMBIENT TEMPERATURE

A. All motors shall be rated for an ambient temperature range of minus 5 degrees F to 105 degrees F, at elevation less than 3,300 feet.

2.05 VOLTAGE AND FREQUENCY RATING

A. Motor Voltage Rating, unless otherwise indicated in motor-driven equipment specifications, shall be the following:

Size	Voltage	Phases
Fractional HP	115/230	1
0.5HP through 300HP	460	3

B. Motors shall be able to start under load and accelerate to rated speed with minimum terminal voltage of 80 percent of motor rated voltage.

C. Insulation shall be Class F, to operate with a Class B temperature rise.

D. Motor power supply frequency shall be as specified on the Motor Data Sheet.

2.06 EFFICIENCY

A. All motors shall exceed MG 1 NEMA Premium Table 12-12 with one band minimum.

2.07 BEARINGS AND LUBRICATION

A. Direct Coupled: 130,000 hours L-10 bearing life for ball and roller bearings as defined in ABMA 9 and 11.

B. Belt Drives: 50,000 hours L-10 bearing life for ball and roller bearings as defined in ABMA 9 and 11.

2.08 SPECIAL FEATURES AND ACCESSORIES

A. All motors shall be provided with cast-in vibration pads (5-point vibration probe mounting locations).

B. All motors shall be capable of field conversion to F2 mounting.

C. Aluminum enclosures are not acceptable. Enclosures to be constructed of cast iron, cast steel, sheet steel, or steel plates.

D. All motors 30HP and above shall be equipped with space heaters, rated for 240V and operated at 120V.

E. All motors shall be equipped with Inpro bearing seals.

F. All exposed metal surfaces shall be protected with a corrosion-resistant polyester paint or coating.

G. Terminal housings shall be cast iron, gasketed, and watertight. Adequate room shall be supplied to meet cable training radius requirements.

H. All insulated windings shall be copper. The winding temperature rise for all motors, when operating at the nameplate horsepower multiplied by the service factor shall not exceed NEMA MG-1 class B insulation temperature rise (Table 12.43), determined by resistance method, and adjusted for site altitude and ambient temperature.

I. Inverter Duty Motors:

1. For inverter drive applications, motors shall exceed NEMA-MG1, Part 31.
2. Winding surge withstanding capability shall be 2400V (minimum).
3. Frame 400 and larger outboard (NDE) bearing shall be insulated and grounding brush on the inboard (DE) shaft.
4. Turn down ratio: as required for application.

J. Horizontal Motors Mounted Vertical (C-Face):

1. Down facing shaft shall be provided with a rain canopy covering the fan cowl air inlet.
2. Up facing shaft shall be designed such that no water can enter the motor via the shaft.
3. Provide two lifting lugs bolted to motor frame.

2.09 SPECIAL MOTORS

A. Where special purpose motors are required for the specific application, such as hoists requiring special torque motors, supply motors meeting the requirements of NEMA MG-1.

B. Two-speed motors shall be two winding, unless specified otherwise.

C. Motors in NEC Classified Areas shall be specific to the hazardous area requirements and shall be coordinated by the driven-equipment design, appropriate codes and standards, and subject to Engineer's approval.

2.10 EQUIPMENT IDENTIFICATION

A. Equipment identification shall comply with Section 01 58 53, Project Equipment Identification, as well as any additional identification requirements listed in this article.

B. Engraved nameplates shall be furnished as indicated on the Drawings or equipment list. Nameplates shall be fastened to motor using screws. As a minimum and per the Drawings, name plates shall include:

1. Tag Number.
2. Circuit Number (where applicable).
3. Name.
4. Reference document number.

2.11 SPARE PARTS

A. Spare parts and special tools required for one year of operation shall be provided per manufacturer's recommendations. Supplier shall submit list of these spare parts and special tools.

B. Spare parts and special tools for construction, commissioning and startup shall be included. Any such parts used during construction or startup shall be replaced.

C. Spare parts and special tools are to be packaged separately from the equipment and shipped along with the equipment. A tag shall be attached to each part showing equipment tag number, part name, or description and Drawing reference and part item number.

D. All spare parts and special tools shall be supplied new and unused.

E. Supplier shall submit a list of recommended spare parts for long-term, reliable operation including pricing. Pricing shall be valid until Project closeout and acceptance.

PART 3 EXECUTION

3.01 FACTORY TESTING

A. Test shall be in accordance with manufacturer's routine (production) tests and IEEE 112. Test reports shall be provided.

B. Inspection and Test Plan (ITP): Manufacturer shall provide an Inspection and Test Plan (ITP) that identifies the inspections and tests to be performed during manufacture. Based on this ITP the Owner or his representatives may elect to witness shop testing. Notify Owner 3 weeks (or as otherwise specified) prior to testing.

3.02 INSTALLATION

A. Installation and alignment with mechanical equipment shall be in strict accordance with manufacturer's instructions and recommendations.

3.03 SUPPLEMENTS

A. The supplement listed below, following "End of Section," is a part of this Specification.

1. Data Sheet.

END OF SECTION

INTENTIONALLY LEFT BLANK

DATA SHEET: LOW VOLTAGE AC INDUCTION MOTORS **PROJECT:** FUEL OIL DELIVERY SYSTEM **CP#:** 1444 **CLIENT:** SEWERAGE &WATER BOARD OF NEW ORLEANS		**EQUIP NAME:** **TAG NO.** **P.O. NO.** **LOCATION: NEW ORLEANS, LA**	
DESCRIPTION	**UNITS**	**SPEC DATA**	**CONTRACTOR DATA**
Motor Manufacturer	-	By Contractor	
Motor Catalog No.	-	By Contractor	
SITE CONDITIONS			
Area Class	-		
Division	-		
Group	-		
Local Motor Starter	Y/N	NO Remote Motor Starter	
RATINGS			
Power	hp	By Contractor	
Synchronous Speed	RPM	By Contractor	
Voltage	V	460	
Number of Phases	Qty	3	
Frequency	Hz	By Contractor	
Frame Size	-	By Contractor	
RPM @ Full Load	RPM	By Contractor	
Full Load Current	A	By Contractor	
Driven Load (maximum)	hp	By Contractor	
Design Type (A, B, C, D, E)	-	By Contractor	
Locked Rotor Code Letter	-	By Contractor	
Enclosure Type	-	TEFC	
CHARACTERISTICS			
Efficiency: 100% Full Load	%	By Contractor	
75% Full Load	%	By Contractor	
50% Full Load	%	By Contractor	
Full Load Current: 100% Full Load	A	By Contractor	
75% Full Load	A	By Contractor	
50% Full Load	A	By Contractor	
Locked Rotor Current	A	By Contractor	
Acceleration Time: No Load	sec	By Contractor	
Full Load	sec	By Contractor	
Motor Inertia	H	By Contractor	
DESIGN REQUIREMENTS			
Minimum Insulation Class (B, F, or H)	-	F	
Maximum Operating Temperature Rise (B, F, or H)	-	B	

DATA SHEET: LOW VOLTAGE AC INDUCTION MOTORS **PROJECT:** FUEL OIL DELIVERY SYSTEM **CP#:** 1444 **CLIENT:** SEWERAGE &WATER BOARD OF NEW ORLEANS		**EQUIP NAME:** **TAG NO.** **P.O. NO.** **LOCATION: NEW ORLEANS, LA**	
DESCRIPTION	**UNITS**	**SPEC DATA**	**CONTRACTOR DATA**
Insulation Class Temperature Rise			
Hot-Spot Temperature Used to Determine Rise	ºC	By Contractor	
Service Factor	-	1.15	
Duty Type (Continuous, short-time, or intermittent)	-	Continuous	
No. of Speeds	1,2,3,4	By Contractor	
No. of Windings	1,2	By Contractor	
Motor Starting Method	-	Full Voltage	
Type of Speed Control	-		
Motor Rated for Use With VFD	Y/N	By Contractor	
Minimum System Voltage During Motor Start	%V	By Contractor	
Sound Level @ Full Load (3' (1 meter) distance)	dBA	By Contractor	
Bearing Type	-	By Contractor	
Bearing Estimated Life Expectancy	Hrs	By Contractor	
Winding RTDs	Y/N	By Contractor	
Vibration Monitoring	Y/N	By Contractor	
Motor Space Heater required:	Y/N	By Contractor	
Rated Voltage	V	220 VAC	
Operating Voltage	V	120 VAC	
Wattage	W	By Contractor	
Motor Terminal Box Location	-	By Contractor	
Size	-	By Contractor	
Mounting Position (Horizontal/Vertical)	-	By Contractor	
Weight	Lb	By Contractor	
Required Data for Motors Rated 60 hp and Larger			
Permissible Starts per Hour:		By Contractor	
With Motor at Rated Ambient	Qty	By Contractor	
With Motor at Rated Total Temp.	Qty	By Contractor	
Locked Rotor Time:			
Cold	Sec	By Contractor	
Hot	Sec	By Contractor	
Acceleration Time, Full Load:			
@ 100% Full Voltage	Sec	By Contractor	
@ 80% Full Voltage	Sec	By Contractor	
Maximum kVAR for PF Correction			
Nonreversing Ratchets	Y/N	By Contractor	

SECTION 26 50 00
LIGHTING

PART 1 GENERAL

1.01 SUMMARY

A. This Specification includes supply and installation of:

1. Interior lighting fixtures and accessories.
2. Exterior lighting fixtures and accessories.
3. Ballasts.
4. Poles.
5. Lighting control systems.
6. Emergency lighting systems.

B. Related Sections:

1. Section 01 33 00, Submittal Procedures.
2. Section 01 61 00, Common Product Requirements.
3. Section 26 00 00, Electrical General Requirements.
4. Section 26 00 10, Electrical Summary of Work.

NOTE: where a more restrictive requirement is specified in a Related Section, the more restrictive requirement shall apply.

1.02 REFERENCES

A. All materials provided and work performed, as described within this Specification, shall adhere to the latest edition of the following Standards, as applicable:

1. American National Standards Institute (ANSI):
   a. C78.42, High Pressure Sodium Lamps.
   b. C81.61, Specifications for Bases (Caps) for Electric Lamps.
   c. C82.1, Line Frequency Fluorescent Lamp Ballasts.
   d. C82.2, Fluorescent Lamp Ballasts – Methods of Measurement.
   e. C82.4, Ballasts for High-Intensity-Discharge and Low-Pressure Sodium Lamps (Multiple-Supply Type).
   f. C136.20, Roadway Lighting Equipment – Fiber-Reinforced Plastic (FRP) Lighting Poles.
2. American Society for Testing and Materials (ASTM): B 429 – Standard Specification for Aluminum-Alloy Extruded Structural Pipe and Tube.
3. Institute of Electrical and Electronics Engineers (IEEE): C2 – National Electrical Safety Code.

4. Illuminating Engineering Society of North America (IESNA).
5. National Electrical Manufacturers Association (NEMA):
   a. 250, Enclosures for Electrical Equipment (1,000 Volts Maximum).
   b. 270, Procedure for Fluorescent Lamp/Ballast/Fixture Performance Comparison.
6. National Fire Protection Association (NFPA):
   a. 70, National Electrical Code.
   b. 101, Life Safety Code.
7. UL:
   a. 496, Lampholders.
   b. 542, Fluorescent Lamp Starters.
   c. 595, Marine-Type Electric Lighting Fixtures.
   d. 676, Underwater Luminaires and Submersible Junction Boxes.
   e. 773, Plug-in, Locking Type Photocontrols for Use With Area Lighting.
   f. 773A, Nonindustrial Photoelectric Switches for Lighting Control.
   g. 844, Electric Lighting Fixtures for Use in Hazardous (Classified) Locations.
   h. 924, Emergency Lighting and Power Equipment.
   i. 935, Fluorescent-Lamp Ballasts.
   j. 1029, High-Intensity-Discharge Lamp Ballasts.

B. All electrical construction shall be performed in accordance with the National Electrical Code, state, local, and Federal Codes, as applicable to the Project site.

1.03 DEFINITIONS

A. Not used.

1.04 SUBMITTALS

A. Documentation shall be submitted in accordance with Section 01 33 00, Submittal Procedures. In addition, supply engineering data, as listed below:

1. Manufacturer’s data including, but not limited to:
   a. Dimensioned and detailed drawings in booklet form with separate sheet or sheets for each fixture, assembled in luminaire “type” alphabetical order and showing:
      1) Materials of construction.
      2) Arrangement of components and wiring.
      3) Gasketing for weather tightness.
      4) Means of mounting luminaire and adjusting aspect.
      5) Finish.
      6) Photometric data with lamp or lamps specified.

7) Electrical data including volts, amperes, and watts.
8) For roadway type lighting fixtures, light distribution data according to IESNA roadway classification type.

b. Lamp data:
1) ANSI designation.
2) Initial and mean lumen output.
3) Average rated hours of lamp life and lamp mortality curve.
4) Color temperature and color rendering index.

c. Ballast data:
1) ANSI designation.
2) Voltage.
3) Corresponding lamp.
4) Line operating and starting amperes.
5) Watts and watt losses.
6) Percent allowable line voltage variation range and lamp crest factor.
7) Total current harmonic distortion.
8) Minimum lamp starting temperature.
9) Normal and maximum ballast operating temperature.

d. Pole data:
1) Dimensions and details.
2) Handholes and wire entry details.
3) Mast or bracket arms and connection to poles.
4) Base plate and anchor bolt details.
5) Wind load and deflection.
6) Finishes.

B. Manufacturer's data and connection diagrams for dimmers and dimming systems.

C. Connection diagrams for lighting control systems.

D. Outline drawings, connection diagrams, and instruction books for inverter type power units.

E. Such other similar information as Engineer may request.

PART 2 PRODUCTS

2.01 LUMINAIRES

A. Luminaires provided shall be UL labeled for the specific application and location in which they are used.

B. Luminaires shall be furnished completely assembled with wiring and mounting devices and be ready for installation at locations shown on the Drawings.

C. Packager shall supply 10 percent, or a minimum of one luminarie where 10 percent is less than one, spare luminaries of each type used on the Project for Owners use. These spares may be used by the Packager prior to system turnover to the Owner but shall be replaced at no cost to the Owner.

2.02 LAMPS

A. Light-Emitting Diode (LED):

1. Shall be energy efficient type.
2. Color shall be appropriate for the application task.
3. Shall be dimmable.

B. Acceptable manufacturers:

1. General Electric Co.
2. Osram Sylvania.
3. Phillips Lighting Company.
4. Acuity Holophane.
5. "Or-equal," Owner approval.

C. Contractor shall supply 10 percent, or a minimum of one lamp where 10 percent is less than one, spare lamps of each type used on the Project for Owners use. These spares may be used by the Contractor prior to system turnover to the Owner but shall be replaced at no cost to the Owner.

2.03 LIGHTING POLES

A. Shall be rated, with luminaire, to withstand steady winds, as indicated in Division 1, General Requirements, without incurring damage.

B. Shall be fabricated from steel, extruded aluminum, fiberglass or concrete, as indicated on the Drawings.

C. Packager shall supply 10 percent, or a minimum of one pole where 10 percent is less than one, spare poles of each type used on the Project for Owners use. These spares may be used by the Packager prior to system turnover to the Owner but shall be replaced at no cost to the Owner.

PART 3 EXECUTION

3.01 GENERAL

A. Determine locations and arrangement of equipment from the Drawings.

B. Locations shown on the Drawings are approximate unless dimensioned. Choose precise location to clear obstructions and to provide sufficient space for operation and maintenance.

C. Coordinate timing of installation and location of equipment with other trades.

D. Install equipment in strict accordance with manufacturer's recommendations.

E. Perform all construction in accordance with the NEC.

F. Repair factory finishes where they become damaged during construction.

G. Install all equipment level and plumb.

H. Install all equipment to meet seismic requirements as specified in Division 01, General Requirements.

3.02 LUMINAIRES

A. Provide proper hangers, pendants, and canopies as necessary for a complete installation.

B. Support lighting fixtures from building framing or floor slabs, independently of conduit system and suspended ceilings.

C. Provide additional ceiling bracing, hanger supports, and other structural reinforcements to building and to concrete pole bases required to safely mount luminaires.

D. Mounting heights shown for pendant mounted luminaires are measured from bottom of luminaire to finished floor or finished grade, whichever is applicable.

E. Mounting heights shown for wall-mounted luminaires are measured from center of mounting plate to finished floor or finished grade, whichever is applicable.

F. Install each luminaire outlet box with galvanized stud.

G. Pendant Mounted:

1. Provide swivel type hangers and canopies to match luminaires, unless otherwise noted.
2. Space single-stem hangers on continuous-row fluorescent luminaires nominally 48 inches apart.
3. Provide twin-stem hangers on single luminaires.

H. Pole Mounted:

1. Provide cast-in-place or precast concrete base, as required.
2. Provide branch circuit in-line fuses in pole base handhole.

I. Swinging Type: Provide, at each support, safety cable capable of supporting four times vertical load from structure to luminaire.

3.03 LAMPS

A. Provide in each fixture, number and type for which fixture is designed, unless otherwise noted.

3.04 BALLASTS

A. Install in accordance with manufacturer's recommendations.

B. Utilize all ballast mounting holes to fasten securely within luminaire.

C. Replace noisy or defective ballasts.

3.05 LIGHTING CONTROL

A. Outdoor Luminaires: Photocells switch lights ON at dusk and OFF at dawn.

3.06 CLEANING

A. Remove labels and markings, except UL listing mark.

B. Wipe luminaires inside and out to remove construction dust.

C. Clean luminaire plastic lenses with antistatic cleaners only.

D. Touch up painted surfaces of luminaires and poles with matching paint ordered from manufacturer.

E. Replace defective lamps at time of Substantial Completion.

END OF SECTION

INTENTIONALLY LEFT BLANK

SECTION 27 15 13
COMMUNICATIONS COPPER HORIZONTAL CABLING

PART 1 GENERAL

1.01 SUMMARY

A. Section Includes:
   1. Category 6a twisted pair cable.
   2. Twisted pair cable hardware.
   3. Cable management system.
   4. Identification products.

B. Related Requirements: Section 26 05 19, Low Voltage Wire and Cable for cables not addressed within Division 27, Communications.

1.02 REFERENCES

A. The following is a list of standards which may be referenced in this section:
   1. ANSI/Institute of Electrical and Electronics Engineers (IEEE)/NEMA/NECA/UL.
   2. BICSI TDMM 14th Edition.
   3. TIA/EIA-455 (2014C) Standard Test Procedure for Fiber Optic Fibers, Cables, Transducers, Sensors, Connecting and Terminating Devices, and Other Fiber Optic Components.
   4. TIA-455-21 (1988a; R 2012) FOTP-21 Mating Durability of Fiber Optic Interconnecting Devices.
   5. TIA-455-78-B (2002) FOTP-78 Optical Fibers – Part 1-40: Measurement Methods and Test Procedures – Attenuation.
   6. TIA-455-107 (1999a) FOTP-107 Determination of Component Reflectance or Link/System Return Loss using a Loss Test Se.
   7. TIA/EIA-455-204 (2000) Standard for Measurement of Bandwidth on Multimode Fiber.
   8. TIA-472D000 (2007b) Fiber Optic Communications Cable for Outside Plant Use.
   9. TIA-492CAAA (1998; R 2002) Detail Specification for Class IVa Dispersion-Unshifted Single-Mode Optical Fibers.
   10. TIA-526-7 (2015a) OFSTP-7 Measurement of Optical Power Loss of Installed Single-Mode Fiber Cable Plant.
   11. TIA-526-14 (2015c) OFSTP-14A Optical Power Loss Measurements of Installed Multimode Fiber Cable Plant.
   12. ANSI/TIA 569-E Commercial Building Standard for Telecommunications Pathways and Spaces.

13. ANSI/TIA-604-10B Fiber Optic Connector Intermateability Standard (FOCIS), Type LC.
14. ANSI/TIA-606-C Administration Standard for Telecommunications Infrastructure.
15. ANSI/TIA-758-C Customer-Owned Outside Plant Telecommunications Infrastructure Standard.
16. ANSI/TIA-568.0-E Generic Telecommunications Cabling for Customer Premises.
17. ANSI/TIA 568.1-E Commercial Building Telecommunications Infrastructure Standard.
18. ANSI/TIA 568.2-D Balanced Twisted-Pair Telecommunications Cabling and Components Standard.
19. ANSI/TIA 568.3-D Optical Fiber Cabling Components Standard.
20. ANSI/TIA 942-B Telecommunications Infrastructure Standard for Data Centers.
21. ANSI/TIA 606-C Administration Standard for Telecommunications Infrastructure.
22. ANSI/TIA 607-D.1 Generic Telecommunications Bonding and Grounding (Earthing) for Customer Premises.

1.03 DEFINITIONS

A. Cross-Connect: A facility enabling the termination of cable elements and their interconnection or cross-connection.
B. EMI: Electromagnetic interference.
C. FTP: Shielded twisted pair.
D. F/FTP: Overall foil screened cable with foil screened twisted pair.
E. F/UTP: Overall foil screened cable with unscreened twisted pair.
F. IDC: Insulation displacement connector.
G. Jack: Also commonly called an "outlet," it is the fixed, female connector.
H. LAN: Local area network.
I. Plug: Also commonly called a "connector," it is the removable, male telecommunications connector.
J. MUTOA: Multi-User Telecommunications Outlet Assembly
K. RCDD: Registered Communications Distribution Designer.
L. Screen: A metallic layer, either a foil or braid, placed around a pair or group of conductors.
M. Shield: A metallic layer, either a foil or braid, placed around a pair or group of conductors.
N. S/FTP: Overall braid screened cable with foil screened twisted pair.
O. S/UTP: Overall braid screened cable with unscreened twisted pairs.

P. UTP: Unscreened (unshielded) twisted pair.

1.04 COPPER HORIZONTAL CABLING DESCRIPTION

A. Horizontal cable cabling system shall provide interconnections between PLC's and network switches within enclosures, buildings or equipment skid control panels as shown on the drawings. These cables are otherwise known as "Cabling Subsystem 1," in the telecommunications cabling system structure. Cabling system consists of horizontal cables, intermediate and main cross-connects, mechanical terminations, and patch cords or jumpers used for horizontal-to-horizontal cross-connection.

1. TIA-568.1-E requires that a minimum of two equipment outlets be installed for each work area.
2. Horizontal cabling shall contain no more than one transition point or consolidation point between the horizontal cross-connect and the telecommunications equipment outlet.
3. Bridged taps and splices shall not be installed in the horizontal cabling.

B. .

C. The maximum allowable horizontal cable length is 295 feet. This maximum allowable length does not include an allowance for the length of 16 feet to the workstation equipment or in the horizontal cross-connect.

1.05 ACTION SUBMITTALS

A. Product Data:

1. Category 6a twisted pair cable.
2. Category 5e twisted pair cable.
3. Twisted pair cable hardware.
4. Cable management system.
5. Identification products.

B. Shop Drawings: Reviewed and stamped by RCDD.

1. System Labeling Schedules:
    a. Electronic copy of labeling schedules, in software and format selected by Owner.
    b. Electronic copy of labeling schedules that are part of cabling and asset identification system of software.
2. Cabling administration Drawings and printouts.
3. Wiring diagrams and installation details of telecommunications equipment, to show location and layout of telecommunications equipment, including the following:
    a. Telecommunications rooms plans and elevations.
    b. Telecommunications pathways.
    c. Telecommunications system access points.
    d. Telecommunications grounding system.

e. Telecommunications conductor drop locations.
f. Typical telecommunications details.
g. Mechanical, electrical, and plumbing systems.

C. Twisted pair cable testing plan.

D. Samples: For telecommunications jacks and plugs, in specified finish, one for each type and configuration and cover plates for color selection and evaluation of technical features.

E. Field Quality-Control Submittals: Field quality-control reports.

1.06 INFORMATIONAL SUBMITTALS

A. Qualification Data: For RCDD, Installer, installation supervisor, and field inspector.

B. Product Certificates: For each type of product.

C. Source quality-control reports.

1.07 CLOSEOUT SUBMITTALS

A. Maintenance Data: For splices and connectors to include in maintenance manuals.

B. Software and Firmware Operational Documentation:
1. Software operating and upgrade manuals.
2. Program Software Backup: On USB media or compact disk, complete with data files.
3. Device address list.
4. Printout of software application and graphic screens.

1.08 MAINTENANCE MATERIAL SUBMITTALS

A. Furnish extra materials that match products installed and that are packaged with protective covering for storage and identified with labels describing contents.

1.09 QUALITY ASSURANCE

A. Installer Qualifications: Cabling Installer shall have personnel certified by BICSI on staff.
1. Layout Responsibility: Preparation of Shop Drawings, cabling administration Drawings, and field testing program development by an RCDD.
2. Installation Supervision: Installation shall be under the direct supervision of Technician or Level 2 Installer, who shall be present at all times when Work of this section is performed at Project Site.
3. Testing Supervisor: Currently certified by BICSI as an RCDD to supervise on-site testing.

B. Testing Agency Qualifications: Testing agency shall have personnel certified by BICSI on staff.
   1. Testing Agency's Field Supervisor: Currently certified by BICSI as an RCDD.

1.10 DELIVERY, STORAGE, AND HANDLING

A. Test cables upon receipt at Project Site.
   1. Test each pair of twisted pair cable for open and short circuits.

1.11 PROJECT CONDITIONS

A. Environmental Limitations: Do not deliver or install cables and connecting materials until wet work in spaces is complete and dry, and temporary HVAC system is operating and maintaining ambient temperature and humidity conditions at occupancy levels during the remainder of the construction period.

1.12 COORDINATION

A. Coordinate layout and installation of telecommunications pathways and cabling with Owner's telecommunications and LAN equipment and service suppliers.

PART 2 PRODUCTS

2.01 PERFORMANCE REQUIREMENTS

A. General Performance: Horizontal cabling system shall comply with transmission standards in TIA-568.1-E, when tested according to test procedures of this standard.
B. Telecommunications Pathways and Spaces: Comply with TIA-569-E.
C. Grounding: Comply with TIA-607-D.

2.02 GENERAL CABLE CHARACTERISTICS

A. Listed and labeled by an NRTL acceptable to authorities having jurisdiction as complying with the applicable standard and NFPA 70 for the following types:
   1. Communications, Plenum Rated:
      a. Type CMP complying with UL 1685 or Type CMP in listed plenum communications raceway or Type CMP in listed cable routing assembly.
      b. Type CMP in metallic conduit installed according to NFPA 70, Article 300.22, "Wiring in Ducts, Plenums, and Other Air-Handling Spaces."
   2. Communications, Non-Plenum Rated:
      a. Type CMR complying with UL 1666 and ICEA S-103-701.
      b. Type Type CMR in listed plenum or riser communications raceway.

c. Type CMR in metallic conduit installed according to NFPA 70, Article 300.22, "Wiring in Ducts, Plenums, and Other Air -Handling Spaces."

B. Surface-Burning Characteristics: Comply with ASTM E84; testing by a qualified testing agency. Identify products with appropriate markings of applicable testing agency.

1. Flame-Spread Index: 25 or less.
2. Smoke-Developed Index: 450 or less.

C. RoHS compliant.

2.03 CATEGORY 6A TWISTED PAIR CABLE

A. Category 6a Twisted Pair Cable: Four-pair, balanced twisted pair cable, certified to meet transmission characteristics of Category 6a cable at frequencies up to 500 MHz.

1. Siemon CAT 6A Cable F/UTP- 9A6P4-A5-07-R1A.

B. Standard: Comply with TIA-568.2-D for Category 6a cables.

C. Conductors: 100-ohm, 23 AWG solid copper.

D. Shielding/Screening: Unshielded twisted pairs (UTP) and/or Shielded twisted pairs (FTP).

E. Cable Rating: Riser.

F. Jacket: Blue thermoplastic.

2.04 CATEGORY 5E TWISTED PAIR CABLE

A. Category 5e Twisted Pair Cable: Four-pair, balanced twisted pair cable, certified to meet transmission characteristics of Category 5e cable at frequencies up to 100 MHz.

1. Siemon CAT 5e Cable 9C5P4-E1-06-RXA.

B. Standard: Comply with TIA-568.2-D for Category 5e cables.

C. Conductors: 100-ohm, 23 AWG solid copper.

D. Shielding/Screening: Unshielded twisted pairs (UTP) and/or Shielded twisted pairs (FTP).

E. Cable Rating: Riser.

F. Jacket: Blue thermoplastic.

2.05 TWISTED PAIR CABLE HARDWARE

A. Twisted Pair Cable Hardware: Hardware designed to connect, splice, and terminate twisted pair copper communications cable.

B. General Requirements for Twisted Pair Cable Hardware:

1. Comply with the performance requirements of Category 6a and 5e.

2. Comply with TIA-568.2-D, IDC type, with modules designed for punch-down caps or tools.
3. Cables shall be terminated with connecting hardware of same category or higher.

C. Source Limitations: Obtain twisted pair cable hardware from same manufacturer or manufacturer partner as twisted pair cable, from single source.

D. Connecting Blocks:
1. 110-style IDC for Category 6a and 5e.
2. Provide blocks for the number of cables terminated on the block, plus 25 percent spare, integral with connector bodies, including plugs and jacks where indicated.

E. Cross-Connect: Modular array of connecting blocks arranged to terminate building cables and permit interconnection between cables.
1. Number of Terminals per Field: One for each conductor in assigned cables.

F. Patch Panel: Modular panels housing numbered jack units with IDC-type connectors at each jack location for permanent termination of pair groups of installed cables.
1. Siemon DIN-PNL-RIC-01:
   a. Universal T568A and T568B wiring labels.
   b. Labeling areas adjacent to conductors.
   c. Replaceable connectors.
   d. 24 ports.
2. Construction: 16-gauge steel and mountable on 19-inch equipment racks.
3. Number of Jacks per Field: One for each four-pair cable indicated, conductor group of indicated cables, plus spares and blank positions adequate to suit specified expansion criteria.

G. Patch Cords: Factory-made, four-pair cables in 36-inch, 48-inch, and 72-inch lengths as necessary based on termination field and switch location. Additional lengths may be required; terminated with an eight-position modular plug at each end.
1. Siemon MC5-07-0202.
2. Siemon SP6A-S03-07.
3. Patch cords shall have bend-relief-compliant boots and color-coded icons to ensure performance. Patch cords shall have latch guards to protect against snagging.
4. Patch cords shall have color-coded boots for circuit identification.

H. Plugs and Plug Assemblies:

1. Male; eight position; color-coded modular telecommunications connector designed for termination of a single four-pair, 100-ohm, unshielded or shielded twisted pair cable.
2. Standard: Comply with TIA-568.2-D.
3. Marked to indicate transmission performance.

I. Jacks and Jack Assemblies:

1. Siemon Z-MaxShield 6A Jacks.
2. Siemon MX5-K06 5e Jacks.
3. Female; eight position; modular; fixed telecommunications connector designed for termination of a single four-pair, 100-ohm, unshielded or shielded twisted pair cable.
4. Designed to snap-in to a patch panel or cover plate.
5. Standard: Comply with TIA-568.2-D.
6. Marked to indicate transmission performance.

J. Cover Plate:

1. Siemon 2 Port Faceplate-10GMX-FPS02-02.
2. Siemon 4 Port Faceplate-10GMX-FPS04-02.
3. Cover Plates: Reference Section 26 05 75, Basic Electrical Materials and Methods
4. For use with snap-in jacks accommodating any combination of twisted pair, optical fiber, and coaxial work area cords.
   a. Flush mounting jacks, positioning the cord at a 45-degree angle.

K. Legend:

1. Machine printed, in the field, using adhesive-tape label.
2. Snap-in, clear-label covers and machine-printed paper inserts.

2.06 CABLE MANAGEMENT SYSTEM

A. Cable Management System: Computer-based cable management system, with integrated database capabilities.

B. Document physical characteristics by recording the network, TIA details, and connections between equipment and cable.

C. Information shall be presented in database view, schematic plans, or technical drawings.

1. AutoCAD drawing software shall be used as Drawing and schematic plans software.

D. System shall interface with the following testing and recording devices:

1. Direct upload tests from circuit testing instrument into the personal computer.
2. Direct download circuit labeling into labeling printer.

2.07 IDENTIFICATION PRODUCTS

A. Comply with TIA-606-C and UL 969 for a system of labeling materials, including label stocks, laminating adhesives, and inks used by label printers.

2.08 SOURCE QUALITY CONTROL

A. Testing Agency: Engage a qualified testing agency to evaluate cables.
B. Factory test cables on reels according to TIA-568.1-E.
C. Factory test twisted pair cables according to TIA-568.2-D.
D. Cable shall be considered defective if it does not pass tests and inspections.
E. Prepare test and inspection reports.

PART 3 EXECUTION

3.01 WIRING METHODS

A. Routing:
1. Install cables in raceways and cable trays, except within consoles, cabinets, desks, and counters. Conceal raceway and cables, except in unfinished spaces.
a. Install plenum cable in environmental air spaces, including plenum ceilings.
2. Comply with requirements for raceways specified in Section 26 05 33, Raceways & Boxes for Electrical .
a. Conceal conductors and cables in accessible ceilings, walls, and floors where possible.

B. Wiring within Enclosures: Bundle, lace, and train cables within enclosures using hook and loop fasteners. No plastic zip ties are allowed for bundling or dressing network cables. Connect to terminal points with no excess and without exceeding manufacturer's limitations on bending radii. Provide and use lacing bars and distribution spools. Install conductors parallel with or at right angles to sides and back of enclosure.

3.02 INSTALLATION OF PATHWAYS

A. Comply with requirements for demarcation point, cabinets, and racks specified in Section 40 95 33, Process Control Networks.
B. Comply with Sections 26 05 33, Raceways & Boxes for Electrical, and 26 05 29, Hangers and Supports for Electrical Systems.
C. Drawings indicate general arrangement of pathways and fittings.

3.03 INSTALLATION OF TWISTED PAIR HORIZONTAL CABLES

A. Comply with NECA 1 and NECA/BICSI 568.
B. General Requirements for Cabling:

1. Comply with TIA-568.0-E, TIA-568.1-E, and TIA-568.2-D.
2. Comply with the most current version of BICSI's "Information Transport Systems Installation Methods Manual (ITSIMM), Ch. 5, "Copper Structured Cabling Systems," "Cable Termination Practices" section.
3. Install 110-style IDC termination hardware unless otherwise indicated.
4. Do not untwist twisted pair cables more than 1/2 inch from the point of termination to maintain cable geometry.
5. Terminate all conductors; no cable shall contain unterminated elements. Make terminations only at indicated outlets, terminals, cross-connects, and patch panels.
6. MUTOA shall not be used as a cross-connect point.
7. Consolidation points may be used only for making a direct connection to equipment outlets:
    a. Do not use consolidation point as a cross-connect point, as a patch connection, or for direct connection to workstation equipment.
    b. Locate consolidation points for twisted pair cables at least 49 feet from communications equipment room.
8. Cables may not be spliced. Secure and support cables at intervals not exceeding 30 inches and not more than 6 inches from cabinets, boxes, fittings, outlets, racks, frames, and terminals.
9. Install lacing bars to restrain cables, prevent straining connections, and prevent bending cables to smaller radii than minimums recommended by manufacturer.
10. Bundle, lace, and train conductors to terminal points without exceeding manufacturer's limitations on bending radii, but not less than radii specified in BICSI Information Transport Systems Installation Methods Manual, Ch. 5, "Copper Structured Cabling Systems," "Cable Termination Practices" section. Use lacing bars and distribution spools.
11. Do not install bruised, kinked, scored, deformed, or abraded cable. Do not splice cable between termination, tap, or junction points. Remove and discard cable if damaged during installation and replace it with new cable.
12. Cold-Weather Installation: Bring cable to room temperature before dereeling. Heat lamps shall not be used for heating.
13. In the communications equipment room, install a 10-foot-long service loop on each end of cable.
14. Pulling Cable: Comply with the most current version of BICSI Information Transport Systems Installation Methods Manual, Ch. 5, "Copper Structured Cabling Systems," "Pulling and Installing Cable" section. Monitor cable pull tensions.

C. Open-Cable Installation:
    1. Open-cable installation is only to be used in locations where cable tray or conduit is not feasible. The maximum distance for the cable tray using open-cable supports is 50 feet.

2. Install cabling with horizontal and vertical cable guides in telecommunications spaces with terminating hardware and interconnection equipment.
3. Suspend twisted pair cabling, not in a wireway or pathway, a minimum of 8 inches above ceilings by cable supports not more than 60 inches apart.
4. Cable shall not be run through structural members or in contact with pipes, ducts, or other potentially damaging items.

D. Installation of Cable Routed Exposed under Raised Floors:
1. Install plenum-rated cable only.
2. Install cabling after the flooring system has been installed in raised floor areas.
3. Coil cable in a figure 8 configuration 6 feet long not less than 12 inches in diameter below each feed point.

E. Group connecting hardware for cables into separate logical fields.

F. Separation from EMI Sources:
1. Comply with recommendations from BICSI's "Telecommunications Distribution Methods Manual" and TIA-569-D for separating unshielded copper communication cable from potential EMI sources, including electrical power lines and equipment.
2. Separation between open communications cables or cables in nonmetallic raceways and unshielded power conductors and electrical equipment shall be as follows:
   a. Electrical Equipment Rating Less than 2 kVA: A minimum of 5 inches.
   b. Electrical Equipment Rating between 2 and 5 kVA: A minimum of 12 inches.
   c. Electrical Equipment Rating More than 5 kVA: A minimum of 24 inches.
3. Separation between communications cables in grounded metallic raceways and unshielded power lines or electrical equipment shall be as follows:
   a. Electrical Equipment Rating Less than 2 kVA: A minimum of 2-1/2 inches.
   b. Electrical Equipment Rating between 2 and 5 kVA: A minimum of 6 inches.
   c. Electrical Equipment Rating More than 5 kVA: A minimum of 12 inches.
4. Separation between communications cables in grounded metallic raceways, power lines, and electrical equipment located in grounded metallic conduits or enclosures shall be as follows:
   a. Electrical Equipment Rating Less than 2 kVA: No requirement.

b. Electrical Equipment Rating between 2 and 5 kVA: A minimum of 3 inches.
c. Electrical Equipment Rating More than 5 kVA: A minimum of 6 inches.

5. Separation between Communications Cables and Electrical Motors and Transformers, 5 kVA or HP and Larger: A minimum of 48 inches.
6. Separation between Communications Cables and Fluorescent Fixtures: A minimum of 5 inches.

3.04 FIRESTOPPING

A. Comply with TIA-569-D, Annex A, "Firestopping."
B. Comply with "Firestopping Systems" Article in BISCI's "Telecommunications Distribution Methods Manual."

3.05 GROUNDING

A. Comply with requirements in Section 27 05 26, Grounding and Bonding for Communications Systems for grounding conductors and connectors.
B. Install grounding according to the "Grounding, Bonding, and Electrical Protection" chapter in BICSI's "Telecommunications Distribution Methods Manual."
C. Comply with TIA-607-D and NECA/BICSI-607.
D. Locate grounding bus bar to minimize the length of bonding conductors. Fasten to wall, allowing at least a 2-inch clearance behind the grounding bus bar. Connect grounding bus bar to suitable electrical building ground, using a minimum No. 4 AWG grounding electrode conductor.
E. Bond metallic equipment to the grounding bus bar, using not smaller than a No. 6 AWG equipment grounding conductor.

3.06 IDENTIFICATION

A. Identify system components, wiring, and cabling complying with TIA-606-C. Comply with requirements for identification specified in Sections 01 58 53, Project Equipment Identification and 26 05 53, Identification for Electrical Systems.
   1. Administration Class: Class 3.
   2. Color-code cross-connect fields and apply colors to voice and data service backboards, connections, covers, and labels.

B. Paint and label colors for equipment identification shall comply with TIA-606-C for Class 3 level of administration, including optional identification requirements of this standard.
C. Cable Schedule: Install in a prominent location in each equipment room and wiring closet. List incoming and outgoing cables and their designations, origins, and destinations. Protect with rigid frame and clear plastic cover. Furnish an electronic copy of final comprehensive schedules for Project.

D. Cabling Administration Drawings: Show building floor plans with cabling administration-point labeling. Identify labeling convention and show labels for telecommunications closets, terminal hardware and positions, horizontal cables, work areas and workstation terminal positions, grounding buses and pathways, and equipment grounding conductors.

E. Cable and Wire Identification:

1. Label each cable within 4 inches of each termination and tap, where it is accessible in a cabinet or junction or outlet box, and elsewhere as indicated.
2. Each wire connected to building-mounted devices is not required to be numbered at the device if wire color is consistent with associated wire connected and numbered within panel or cabinet.
3. Exposed Cables and Cables in Cable Trays and Wire Troughs: Label each cable at intervals not exceeding 15 feet.
4. Label each terminal strip, and screw terminal in each cabinet, rack, or panel.
    a. Individually number wiring conductors connected to terminal strips, and identify each cable or wiring group, extended from a panel or cabinet to a building-mounted device, with the name and number of a particular device.
    b. Label each unit and field within distribution racks and frames.
5. Identification within Connector Fields in Equipment Rooms and Wiring Closets: Label each connector and each discrete unit of cable-terminating and -connecting hardware. Where similar jacks and plugs are used for both voice and data communication cabling, use a different color for jacks and plugs of each service.

F. Labels shall be preprinted or computer-printed type, with a printing area and font color that contrast with cable jacket color but still comply with TIA-606-C requirements for the following:

1. Cables use flexible vinyl or polyester that flexes as cables are bent.

3.07 FIELD QUALITY CONTROL

A. Acceptance Testing Preparation: Horizontal cabling shall remain undisturbed before, during and after testing and certification. Certification equipment shall be calibrated within 12 months of the complete certification.

B. Field tests and inspections shall be witnessed by authorities having jurisdiction or be performed by a third party RCDD or Technician.

C. Tests and Inspections:

1. Visually inspect jacket materials for NRTL certification markings. Inspect cabling terminations in communications equipment rooms for compliance with color-coding for pin assignments and inspect cabling connections for compliance with TIA-568.1-E.
2. Visually inspect cable placement, cable termination, grounding and bonding, equipment and patch cords, and labeling of all components.

3. Test twisted pair cabling for DC loop resistance, shorts, opens, intermittent faults, and polarity between conductors. Test operation of shorting bars in connection blocks. Test cables after termination but not cross-connection.
    a. Test instruments shall meet or exceed applicable requirements in TIA-568.2-D. Perform tests with a tester that complies with performance requirements in "Test Instruments (Normative)" Annex, complying with measurement accuracy specified in "Measurement Accuracy (Informative)" Annex. Use only test cords and adapters that are qualified by test equipment manufacturer for channel or link test configuration.

D. Data for each measurement shall be documented. Data for submittals shall be printed in a summary report that is formatted similarly to Table 10.1 in BICSI's "Telecommunications Distribution Methods Manual," or shall be transferred from the instrument to the computer, saved as text files, printed, and submitted.

E. Nonconforming Work:
1. End-to-end cabling shall be considered defective if it does not pass tests and inspections.
2. Remove and replace cabling where test results indicate that they do not comply with specified requirements.

F. Collect, assemble, and submit test and inspection reports.

G. Manufacturer Services: Engage factory-authorized service representative to support field tests and inspections.

3.08 MAINTENANCE

A. Software Service Agreement:

1. Technical Support: Beginning at Substantial Completion, verify that software service agreement includes software support for 2 years.
2. Upgrade Service: At Substantial Completion, update software to latest version. Install and program software upgrades that become available within two years from date of Substantial Completion. Verify that upgrading software includes operating system and new or revised licenses for using software.
    a. Upgrade Notice: No fewer than 30 days to allow Owner to schedule and access the system and to upgrade computer equipment if necessary.
3. Upgrade Reports: Prepare report after each update, documenting upgrades installed.

END OF SECTION

SECTION 27 15 23
COMMUNICATIONS OPTICAL FIBER HORIZONTAL CABLING

PART 1 GENERAL

1.01 RELATED DOCUMENTS

A. Drawings and general provisions of the Contract, including General and Supplementary Conditions and Division 01, General Requirements Specification sections, apply to this section.

1.02 SUMMARY

A. Section Includes:

1. 850 nanometer laser-optimized 50/125 micrometer multimode optical fiber cable (OM4).
2. Optical fiber cable connecting hardware, patch panels, and cross-connects.
3. Grounding.
4. Cabling identification products.

1.03 REFERENCES

A. The following is a list of standards which may be referenced in this section:

1. ANSI/Institute of Electrical and Electronics Engineers (IEEE)/NEMA/NECA/UL.
2. BICSI TDMM 14th Edition.
3. TIA/EIA-455 (2014C) Standard Test Procedure for Fiber Optic Fibers, Cables, Transducers, Sensors, Connecting and Terminating Devices, and Other Fiber Optic Components.
4. TIA-455-21 (1988a; R 2012) FOTP-21 Mating Durability of Fiber Optic Interconnecting Devices.
5. TIA-455-78-B (2002) FOTP-78 Optical Fibers — Part 1-40: Measurement Methods and Test Procedures — Attenuation.
6. TIA-455-107 (1999a) FOTP-107 Determination of Component Reflectance or Link/System Return Loss using a Loss Test Se.
7. TIA/EIA-455-204 (2000) Standard for Measurement of Bandwidth on Multimode Fiber.
8. TIA-472D000 (2007b) Fiber Optic Communications Cable for Outside Plant Use.
9. TIA-492CAAA (1998; R 2002) Detail Specification for Class IVa Dispersion-Unshifted Single-Mode Optical Fibers.
10. TIA-526-7 (2015a) OFSTP-7 Measurement of Optical Power Loss of Installed Single-Mode Fiber Cable Plant.
11. TIA-526-14 (2015c) OFSTP-l4A Optical Power Loss Measurements of

Installed Multimode Fiber Cable Plant.

12. ANSI/TIA 569-E Commercial Building Standard for Telecommunications Pathways and Spaces.
13. ANSI/TIA-604-10B Fiber Optic Connector Intermateability Standard (FOCIS), Type LC.
14. ANSI/TIA-606-C Administration Standard for Telecommunications Infrastructure.
15. ANSI/TIA-758-C Customer-Owned Outside Plant Telecommunications Infrastructure Standard.
16. ANSI/TIA-568.0-E Generic Telecommunications Cabling for Customer Premises.
17. ANSI/TIA 568.1-E Commercial Building Telecommunications Infrastructure Standard.
18. ANSI/TIA 568.2-D Balanced Twisted-Pair Telecommunications Cabling and Components Standard.
19. ANSI/TIA 568.3-D Optical Fiber Cabling Components Standard.
20. ANSI/TIA 942-B Telecommunications Infrastructure Standard for Data Centers.
21. ANSI/TIA 606-C Administration Standard for Telecommunications Infrastructure.
22. ANSI/TIA 607-D.1 Generic Telecommunications Bonding and Grounding (Earthing) for Customer Premises.

1.04 DEFINITIONS

A. BICSI: Building Industry Consulting Service International.

B. Cross-Connect: A facility enabling the termination of cable elements and their interconnection or cross-connection.

C. RCDD: Registered Communications Distribution Designer.

1.05 OPTICAL FIBER HORIZONTAL CABLING DESCRIPTION

A. Optical fiber horizontal cabling system shall provide interconnections between the fiber patch panels and equipment skids as shown on the drawings. These cables are otherwise known as "Cabling Subsystem 1" in the telecommunications cabling system structure. Cabling system consists of horizontal cables, intermediate and main cross-connects, mechanical terminations, and patch cords or jumpers used for horizontal-to-horizontal cross-connection.

1. TIA-568.1-E requires that a minimum of two equipment outlets be installed for each work area.
2. Horizontal cabling shall contain no more than one transition point or consolidation point between the horizontal cross-connect and the equipment outlet.
3. Bridged taps and splices shall not be installed in the horizontal cabling.

B. The maximum allowable horizontal cable length is 295 feet. This maximum allowable length does not include an allowance for the length of 16 feet to the workstation equipment or in the horizontal cross-connect.

1.06 ACTION SUBMITTALS

A. Product Data: For each type of product.

B. Shop Drawings: Reviewed and stamped by RCDD.

1. System Labeling Schedules: Electronic copy of labeling schedules, in software and format selected by Owner.
2. System Labeling Schedules: Electronic copy of labeling schedules that are part of the cabling and asset identification system of the software.
3. Cabling administration Drawings and printouts.
4. Wiring diagrams and installation details of telecommunications equipment, to show location and layout of telecommunications equipment, including the following:
   a. Telecommunications rooms plans and elevations.
   b. Telecommunications pathways.
   c. Telecommunications system access points.
   d. Telecommunications grounding system.
   e. Telecommunications conductor drop locations.
   f. Typical telecommunications details.
   g. Mechanical, electrical, and plumbing systems.

C. Fiber optic cable testing plan.

1.07 INFORMATIONAL SUBMITTALS

A. Qualification Data: For RCDD, Installer, installation supervisor, and field inspector.

B. Product Certificates: For each type of product.

C. Source quality-control reports.

D. Field quality-control reports.

1.08 CLOSEOUT SUBMITTALS

A. Software and Firmware Operational Documentation:

1. Software operating and upgrade manuals.
2. Program Software Backup: On USB media or compact disk, complete with data files.

3. Device address list.
4. Printout of software application and graphic screens.

B. Maintenance Data: For optical fiber cable, splices, and connectors to include in maintenance manuals.

1.09 MAINTENANCE MATERIAL SUBMITTALS

A. Furnish extra materials that match products installed and that are packaged with protective covering for storage and identified with labels describing contents.

1.10 QUALITY ASSURANCE

A. Installer Qualifications: Cabling Installer shall have personnel certified by BICSI on staff.

1. Layout Responsibility: Preparation of Shop Drawings, Cabling Administration Drawings, and field-testing program development by an RCDD or Technician.
2. Installation Supervision: Installation shall be under the direct supervision of Technician or Level 2 Installer, who shall be always present when Work of this section is performed at Project Site.
3. Testing Supervisor: Currently certified by BICSI as an RCDD or Technician.

B. Testing Agency Qualifications: Testing agency shall have personnel certified by BICSI on staff.

1. Testing Agency's Field Supervisor: Currently certified by BICSI as an RCDD to supervise on-site testing.

1.11 DELIVERY, STORAGE, AND HANDLING

A. Test cables upon receipt at Project Site.

1. Test optical fiber cable to determine the continuity of the strand end to end. Use optical fiber flashlight or optical loss test set.
2. Test optical fiber cable while on reels. Use an optical time domain reflectometer to verify the cable length and locate cable defects, splices, and connector, including the loss value of each. Retain test data and include the record in maintenance data.

1.12 PROJECT CONDITIONS

A. Environmental Limitations: Do not deliver or install cables and connecting materials until wet work in spaces is complete and dry, and temporary HVAC system is operating and maintaining ambient temperature and humidity conditions at occupancy levels during the remainder of the construction period.

1.13 COORDINATION

A. Coordinate layout and installation of telecommunications pathways and cabling with Owner's telecommunications equipment and service suppliers.

1.14 SOFTWARE SERVICE AGREEMENT

A. Technical Support: Beginning with Substantial Completion, provide software support for 2 years.

B. Upgrade Service: Update software to latest version at Project completion. Install and program software upgrades that become available within 2 years from date of Substantial Completion. Upgrading software shall include operating system. Upgrade shall include new or revised licenses for use of software.

1. Provide 30 days' notice to Owner to allow scheduling and access to system and to allow Owner to upgrade computer equipment if necessary.

PART 2 PRODUCTS

2.01 PERFORMANCE REQUIREMENTS

A. General Performance: Horizontal cabling system shall comply with transmission standards in TIA-568.1-E, when tested according to test procedures of this standard.

B. Telecommunications Pathways and Spaces: Comply with TIA-569-E.

C. Grounding: Comply with TIA-607-D.

2.02 850 NANOMETER LASER-OPTIMIZED, 50/125 MICROMETER, MULTIMODE OPTICAL FIBER CABLE (OM4)

A. Description: Multimode, 50/125-micrometer (strand count as described on the Drawings) nonconductive, tight buffer, optical fiber cable.

1. Corning 12 Strand 012T8F-31190-29.
2. Corning 6 Strand 006T8F-31190-29.
3. Corning 2 Strand 002T8F-31190-29.

B. Standards:

1. Comply with ICEA S-83-596 for mechanical properties.
2. Comply with TIA-568-D.3 for performance specifications.
3. Comply with TIA-492AAAD for detailed specifications.

C. Maximum Attenuation: 3.50 dB/km at 850 nm; 1.5 dB/km at 1300 nm.

D. Minimum Overfilled Modal Bandwidth-length Product: 3500 MHz-km at 850 nm; 500 MHz-km at 1300 nm.

E. Minimum Effective Modal Bandwidth-length Product: 4700 MHz-km at 850 nm.

F. Jacket:

1. Jacket Color: Aqua.
2. Cable cordage jacket, fiber, unit, and group color shall be according to TIA-598-D.
3. Imprinted with fiber count, fiber type, and aggregate length at regular intervals not to exceed 40 inches.

G. Listed and labeled by an NRTL acceptable to authorities having jurisdiction as complying with UL 444, UL 1651, and NFPA 70 for the following types:

1. Non Plenum Rated, Nonconductive: Type OFNR, complying with NFPA 262.
2. Non Plenum Rated, Nonconductive: Type OFNR in listed plenum communications raceway.
3. Non Plenum Rated, Conductive: Type OFCR, complying with NFPA 262.
4. Non Plenum Rated, Conductive: Type OFCR or Type OFNR in listed plenum communications raceway.
5. Non Plenum Rated, Conductive: Type OFCR, or Type OFNR in metallic conduit installed per NFPA 70, Article 300.22, "Wiring in Ducts, Plenums, and Other Air-Handling Spaces."

2.03 OPTICAL FIBER CABLE HARDWARE

A. Standards:

1. Comply with Fiber Optic Connector Intermateability Standard (FOCIS) specifications of the TIA-604 series.
2. Comply with TIA-568.3-D.

B. Cross-Connects and Patch Panels: Modular panels housing multiple-numbered, duplex cable connectors.

1. Number of Connectors per Field: One for each fiber of cable or cables assigned to field, plus spares and blank positions adequate to suit specified expansion criteria.

C. Patch Cords: Factory-made, single-fiber cables in 36-inch lengths.

D. Connector Type: Type LC complying with TIA-604-10-B, connectors.

E. Plugs and Plug Assemblies:

1. Male; color-coded modular telecommunications connector designed for termination of a single optical fiber cable.
2. Insertion loss not more than 0.25 dB.
3. Marked to indicate transmission performance.

F. Jacks and Jack Assemblies:

1. Female; quick-connect, simplex and duplex; fixed telecommunications connector designed for termination of a single optical fiber cable.
2. Insertion loss not more than 0.25 dB.
3. Marked to indicate transmission performance.
4. Designed to snap-in to a patch panel or faceplate.

G. Faceplate:

1. Four -port, vertical single-gang faceplates designed to mount to single-gang wall boxes.
2. Twelve -port, vertical double-gang faceplates designed to mount to double-gang wall boxes.
3. Cover Plates: High-impact plastic (indoor) or metal (mechanical process area) depending on location. Coordinate color with walls and outlets.
4. For use with snap-in jacks accommodating any combination of twisted pair, optical fiber, and coaxial work area cords.
   a. Flush mounting jacks, positioning the cord at a 45-degree angle.

2.04 GROUNDING

A. Comply with requirements in Section 27 05 26, Grounding and Bonding for Communications Systems for grounding conductors and connectors.

B. Comply with TIA-607-D.

2.05 IDENTIFICATION PRODUCTS

A. Comply with TIA-606-C and UL 969 for a system of labeling materials, including label stocks, laminating adhesives, and inks used by label printers.

2.06 SOURCE QUALITY CONTROL

A. Testing Agency: Engage a qualified testing agency to evaluate cables.

B. Factory test multimode optical fiber cables according to TIA-526-14-B and TIA-568-D.3.

C. Factory test preterminated optical fiber cable assemblies according to TIA-526-14-B and TIA-568-D.3.

D. Cable shall be considered defective if it does not pass tests and inspections.

E. Prepare test and inspection reports.

PART 3 EXECUTION

3.01 WIRING METHODS

A. Wiring Method: Install cables in raceways and cable trays except within consoles, cabinets, desks, and counters. Conceal raceway and cables except in unfinished spaces.

1. Install plenum cable in environmental air spaces, including plenum ceilings.
2. Comply with requirements for raceways specified in Sections 26 05 33, -Raceways & Boxes for Electrical.

B. Wiring Method: Conceal conductors and cables in accessible ceilings, walls, and floors where possible.

C. Wiring within Enclosures: Bundle, lace, and train cables within enclosures. Connect to terminal points with no excess and without exceeding manufacturer's limitations on bending radii. Provide and use lacing bars and distribution spools.

3.02 INSTALLATION OF OPTICAL FIBER BACKBONE CABLES

A. Comply with NECA 1, NECA 301 and NECA/BICSI 568.

B. General Requirements for Optical Fiber Cabling Installation:

1. Comply with TIA-568.1-E and TIA-568.3-D.
2. Comply with the most current version of the BICSI ITSIMM, Ch. 6, "Cable Termination Practices."
3. Terminate all cables; no cable shall contain unterminated elements. Make terminations only at indicated outlets, terminals, cross-connects, and patch panels.
4. Cables may not be spliced. Secure and support cables at intervals not exceeding 30 inches and not more than 6 inches from cabinets, boxes, fittings, outlets, racks, frames, and terminals.
5. Install lacing bars to restrain cables, to prevent straining connections, and to prevent bending cables to smaller radii than minimums recommended by manufacturer.
6. Bundle, lace, and train cable to terminal points without exceeding manufacturer's limitations on bending radii, but not less than radii specified in the most current version of the BICSI ITSIMM, "Cabling Termination Practices" Chapter. Use lacing bars and distribution spools.

7. Do not install bruised, kinked, scored, deformed, or abraded cable. Do not splice cable between termination, tap, or junction points. Remove and discard cable if damaged during installation and replace it with new cable.
8. Cold-Weather Installation: Bring cable to room temperature before dereeling. Heat lamps shall not be used for heating.
9. In the communications equipment room, provide a 10-foot-long service loop on each end of cable.
10. Pulling Cable: Comply with the most current version of the BICSI ITSIMM, Ch. 4, "Pulling Cable." Monitor cable pull tensions.
11. Cable may be terminated on connecting hardware that is rack or cabinet mounted.

C. Open-Cable Installation:

1. Install cabling with horizontal and vertical cable guides in telecommunications spaces with terminating hardware and interconnection equipment.
2. Cable shall not be run through structural members or in contact with pipes, ducts, or other potentially damaging items.

D. Installation of Cable Routed Exposed under Raised Floors:

1. Install plenum-rated cable only.
2. Install cabling after the flooring system has been installed in raised floor areas.
3. Coil cable 6 feet long not less than 12 inches in diameter below each feed point.

E. Group connecting hardware for cables into separate logical fields.

3.03 FIRESTOPPING

A. Comply with TIA-569-E, Annex A, "Firestopping."

B. Comply with BICSI ITSIMM, "Firestopping" Chapter.

3.04 GROUNDING

A. Install grounding according to the most current version of the BICSI ITSIMM, "Grounding (Earthing), Bonding, and Electrical Protection" Chapter.

B. Comply with TIA-607-D and NECA/BICSI-607.

C. Locate grounding bus bar to minimize the length of bonding conductors. Fasten to wall allowing at least 2-inch clearance behind the grounding bus bar. Connect grounding bus bar with a minimum No. 4 AWG grounding electrode conductor from grounding bus bar to suitable electrical building ground.

D. Bond metallic equipment to the grounding bus bar, using not smaller than No. 6 AWG equipment grounding conductor.

3.05 IDENTIFICATION

A. Identify system components, wiring, and cabling complying with TIA-606-C. Comply with requirements for identification specified in Sections 01 58 53, Project Equipment Identification and 26 05 53, Identification for Electrical Systems.

1. Administration Class: Class 3.
2. Color-code cross-connect fields and apply colors to voice and data service backboards, connections, covers, and labels.

B. Paint and label colors for equipment identification shall comply with TIA-606-C for Class 3 level of administration including optional identification requirements of this standard.

C. Cable Schedule: Install in a prominent location in each equipment room and wiring closet. List incoming and outgoing cables and their designations, origins, and destinations. Protect with rigid frame and clear plastic cover. Furnish an electronic copy of final comprehensive schedules for Project.

D. Cabling Administration Drawings: Show building floor plans with cabling administration-point labeling. Identify labeling convention and show labels for telecommunications closets, horizontal pathways and cables, entrance pathways and cables, terminal hardware and positions, horizontal cables, work areas and workstation terminal positions, grounding buses and pathways, and equipment grounding conductors.

E. Cable and Wire Identification:

1. Label each cable within 4 inches of each termination and tap, where it is accessible in a cabinet or junction or outlet box, and elsewhere as indicated.
2. Each wire connected to building-mounted devices is not required to be numbered at device if color of wire is consistent with associated wire connected and numbered within panel or cabinet.
3. Exposed Cables and Cables in Cable Trays and Wire Troughs: Label each cable at intervals not exceeding 15 feet.
4. Label each unit and field within distribution racks and frames.
5. Identification within Connector Fields in Equipment Rooms and Wiring Closets: Label each connector and each discrete unit of cable- terminating and connecting hardware. Where similar jacks and plugs are used for both voice and data communication cabling, use a different color for jacks and plugs of each service.

F. Labels shall be preprinted or computer-printed type with printing area and font color that contrasts with cable jacket color but still complies with requirements in TIA 606-C, for the following:

1. Flexible vinyl or polyester that flexes as cables are bent.

3.06 FIELD QUALITY CONTROL

A. Testing Agency: Owner will engage a qualified testing agency to perform tests and inspections.

B. Testing Agency: Engage a qualified testing agency to perform tests and inspections.

C. Manufacturer's Field Service: Engage a factory-authorized service representative to test and inspect components, assemblies, and equipment installations, including connections.

D. Perform tests and inspections.

E. Tests and Inspections:

1. Visually inspect optical fiber jacket materials for NRTL certification markings. Inspect cabling terminations in communications equipment rooms for compliance with color-coding for pin assignments and inspect cabling connections for compliance with TIA-568-E.1.
2. Visually inspect cable placement, cable termination, grounding and bonding, equipment and patch cords, and labeling of all components.
3. Optical Fiber Cable Tests:
    a. Test instruments shall meet or exceed applicable requirements in TIA-568-D.1. Use only test cords and adapters that are qualified by test equipment manufacturer for channel or link test configuration.
    b. Link End-to-End Attenuation Tests:
        1) Horizontal and Multimode Horizontal Link Measurements: Test at 850 or 1300 nm in one direction according to TIA-526-14-B, Method B, One Reference Jumper.
        2) Attenuation test results for horizontal links shall be less than 2.0 dB. Attenuation test results shall be less than those calculated according to equation in TIA-568.1-E.

F. Data for each measurement shall be documented. Data for submittals shall be printed in a summary report that is formatted like Table 10.1 in the most current version of the BICSI TDMM, or transferred from the instrument to the computer, saved as text files, and printed and submitted.

G. Remove and replace cabling where test results indicate that it does not comply with specified requirements.

H. End-to-end cabling shall be considered defective if it does not pass tests and inspections.

I. Prepare test and inspection reports.

END OF SECTION

SECTION 31 20 00
EARTHWORK

PART 1 GENERAL

1.01 SUMMARY

A. Section specifies providing a graded Site for temporary and permanent drainage.

1.02 PROJECT/SITE CONDITIONS

A. Soil reports and other topographic or soil data shown on the Drawings or included in Volume 4 Reference Documents are only for general information. Owner and Engineer are not responsible for their accuracy, completeness or usefulness and meaning. Make such additional investigations as required to become acquainted with site topography and sub-surface soil conditions for preparation of bid, and for successful execution of Work.

1.03 REFERENCES

A. The following is a list of standards which may be referenced in this section:

1. ASTM International (ASTM):

a. ASTM C88, Standard Test Method for Soundness of Aggregates by Use of Sodium Sulfate or Magnesium Sulfate.

b. ASTM C117, Standard Test Method for Materials Finer than 75-um (No. 200) Sieve in Mineral Aggregates by Washing.

c. ASTM C131, Standard Test Method for Resistance to Degradation of Small-Size Coarse Aggregate by Abrasion and Impact in the Los Angeles Machine.

d. ASTM C136, Standard Test Method for Sieve Analysis of Fine and Coarse Aggregates.

e. ASTM C535, Standard Test Method for Resistance to Degradation of Large-Size Coarse Aggregate by Abrasion and Impact in the Los Angeles Machine.

f. D698, Standard Test Methods for Laboratory Compaction Characteristics of Soil Using Standard Effort (12,400 ft-lbf/ft3).

g. D1556, Standard Test Method for Density and Unit Weight of Soil in Place by the Sand-Cone Method.

h. D1557, Standard Test Methods for Laboratory Compaction Characteristics of Soil Using Modified Effort (56,000 ft-lbf/ft3).

i. D2167, Standard Test Method for Density and Unit Weight of Soil in Place by the Rubber Balloon Method.

j. D2487, Standard Practice for Classification of Soils for Engineering Purposes (Unified Soil Classification System).

k. D2937, Standard Test Method for Density of Soil in Place by the Drive-Cylinder Method.

l. ASTM D4253, Standard Test Methods for Maximum Index Density and Unit Weight of Soils Using a Vibratory Table.

m. D6938, Standard Test Methods for In-Place Density and Water Content of Soil and Soil-Aggregate by Nuclear Methods (Shallow Depth).

n. Occupational Safety and Health Administration (OSHA): 29 CFR, Part 1926, Safety and Health Regulations for Construction.

1.04 GEOTECHNICAL INVESTIGATION REPORTS

A. Eustis Engineering L.L.C., "Professional Geotechnical Services Sewerage and Water Board of New Orleans, Carrollton Water Treatment Plant, C-7 and C-8 Basin Demolition, Phase I and II: Engineering Report, New Orleans, Louisiana, April 12, 2018 (Included in Volume 4 Reference Documents).

1.05 SUBMITTALS

A. Informational Submittals:

1. Compaction Tests: Reports of compaction test and retests.
   a. Contents of Reports:
      1) Date of test and date submitted.
      2) Atmospheric conditions.
      3) Location of test.
      4) Wet weight, moisture content, and dry weight of field sample.
      5) Description of soil.
      6) Maximum dry density and moisture content of laboratory sample which best matches field sample in color, texture, grain size, and maximum dry density.
      7) Ratio of field dry density to maximum laboratory dry density expressed as a percent.
      8) Comments concerning field density passing or failing specified compaction.
      9) Comments about re-compaction, if required.

1.06 QUALITY ASSURANCE

A. Testing Materials for Earthwork: Work shall be inspected, sampled, and tested by Geotechnical Engineer, retained by the Contractor, in accordance with the requirements of this Specification.

PART 2 PRODUCTS

2.01 MATERIALS

A. Per Section 31 23 23, Fill and Backfill.

PART 3 EXECUTION

3.01 EROSION AND DUST CONTROL

A. Perform earthwork operations to minimize erosion and dust transport.

B. Provide additional protective measures to prevent sediment and dust from being removed from Site.

3.02 EXCAVATION

A. Preparatory Work:

1. Clearing and stripping: Clear, remove, and dispose of unsuitable materials resting on or protruding above ground that prohibits normal construction activities within the work limits, in stockpile areas, and in storage areas.
2. Remove topsoil prior to beginning excavation.
    a. Excavate or strip topsoil in cut and fill areas, and stockpile for later use in connection with finish grading.
    b. Excavate topsoil to depths required to remove organic material from subgrade, but not less than 6 inches.
    c. Remove undesirable material from topsoil prior to stockpiling. Removal does not include grass or grass roots in topsoil.
    d. Transport and deposit topsoil in stockpiles convenient for spreading and finish grading.
3. Stockpile topsoil as follows:
    a. Place stockpiles at approved locations. Coordinate with Owner prior to construction.
    b. Install sediment control (silt fence) on down-hill side of stockpile areas.
    c. Clear and grub stockpile area prior to placing topsoil.
    d. Stockpile excavated topsoil and separate from other excavated materials for later use.
    e. Keep stockpile free of undesirable materials.
    f. Make stockpiles neatly shaped and free to drain.
4. Removal of road material prior to beginning excavation.
    a. Excavate or strip road material in cut and fill areas and dispose legally offsite.
5. Perform excavation in a manner and sequence to provide drainage.
6. Provide, maintain and operate temporary drains, ditches, pumps, drainage lines or other equipment to intercept, divert, or remove water from excavations.

B. Excavating:

1. Excavate areas designated on the Drawings to elevations or depths shown.

2. Excavate to depth necessary to remove rubble.
3. Segregate excavated materials into suitable and unsuitable stockpiles for future use or disposal.

C. Stockpiling:
1. Stockpile excavated materials in separate suitable and unsuitable stockpiles.
2. Segregate roots, stumps, rocks larger than 3 inches, refuse, and other deleterious materials from excavated material and dispose offsite in a legal manner.
3. Stockpile suitable excavated materials adjacent to excavation, but no closer to bank than depth of excavation, or 5 feet minimum.
4. Place stockpiled materials no greater than 4 feet in height and do not obstruct proper drainage of area. Do not place stockpiles over existing underground piping or duct bank. Do not obstruct access to valves, fire hydrants, and drainage structures.
5. Provide Owner approved dust palliative on stockpile material.

D. Use of Excavated Materials: Use suitable materials removed from excavation, including ditches, to form fill or embankment indicated on the Drawings.

3.03 DEWATERING

A. Provide and maintain dewatering system capable of removing water that accumulates in excavation to a point 1 foot below excavation or below lowest subgrade to maintain limits of Work in a dry condition.

B. Rework unstable or damaged Work from failure to dewater properly at no additional cost.

C. Excavation of Unsuitable Material:
1. Excavate areas as directed by geotechnical consultant where proofrolling indicates unstable subgrade or excessive rutting.
2. Excavate to elevation or depth to correct unstable condition as directed by geotechnical consultant.
3. After areas found to be unstable have been improved by excavation and backfilling, proofroll again to ensure effectiveness of corrective measures.

D. Backfilling of Excavated Areas:
1. Backfill excavated areas with approved suitable material, unless otherwise directed by geotechnical consultant.
2. Place backfill as soon as possible after excavation, but in no case can excavation be left open overnight.
3. Do not place backfill on areas covered by water.
4. Remove water from excavated areas by approved methods.
5. Place and compact backfill material in accordance with requirements specified for fills or embankments.

3.04 SOIL COMPACTION CONTROL

A. Compaction Requirements: Compaction required for fill and embankment areas.

1. Compaction Standard: ASTM D698, Standard Proctor maximum dry density.
2. Loose Lift Thickness:
   a. Self-Propelled Equipment (Large): 8-inch maximum layers.
   b. Self-Propelled Equipment (Small - i.e. Rammax): 6-inch maximum layers.
   c. Hand Operated Equipment (i.e. - Plate Tamps, Jumping Jacks, Wacker-Packer): 3-inch to 4-inch maximum layers.
3. General Fill: 95 percent minimum.
4. Moisture Content: Optimum plus or minus 3 percent.
5. Use of Controlled Low-Strength Material (CLSM): Use of an approved low-strength flowable fill shall be permitted as a substitute for compaction under structures, in accordance with the recommendations of the geotechnical report, and the approval of the Engineer's Geotechnical Engineering Consultant.

B. Equipment: Provide equipment for wetting or drying and manipulating fill material to secure uniform moisture content within an allowable range as determined by geotechnical consultant.

3.05 FINISHED GRADING

A. Preparatory Work: Complete backfilling prior to finish grading. Correct washouts or other similar irregularities.

B. Spreading Topsoil:

1. Spread topsoil on newly graded areas outside foundations.
2. Obtain topsoil from stockpiles and spread in uniform 6-inch thick layers.
3. Grade finished topsoiled areas suitable for sowing and proper maintenance of grass.
4. Dress (grade and shape) stockpile areas smooth after topsoil is spread.
5. Provide drainage of shaped stockpile area and protect against erosion.

C. Finish Grading:

1. Finish grade exposed earth surfaces and roadway subgrades to within plus or minus 0.10 foot of design grade.
2. Use blade-grader or scraper equipment to obtain finished grade of Work as specified.
3. Obtain accuracy of finish grade using templates and stringlines; hand raking methods is required in case of shoulders, gutters, and similar areas.
4. Finish ditches so they drain readily.

5. Leave finished grade 1-inch lower than top of pavement elevation where bulking of soil caused by grass growth will prevent drainage from running off pavement.

D. Protection: Maintain finish grades until final completion. Repair damage resulting from water, wind, and equipment.

3.06 FIELD QUALITY CONTROL

A. Soils Sampling and Testing:

1. Testing to Determine Suitability of Earthwork Materials: The Contractor's Geotechnical Engineering Consultant shall determine the suitability of earthwork materials to be furnished and used on the Project site. These tests, performed in sufficient quantity to determine that suitability is being met or maintained, shall include, but not necessarily be limited to:

a. Determination of liquid limit and plasticity index in accordance with ASTM C117 and ASTM C136, and abrasion and soundness according to ASTM C131, ASTM C535 and ASTM C88. Moisture density relations shall be determined in accordance with ASTM D698, ASTM D1557, or ASTM D4253 as required. Definitions of suitable materials shall be as specified in the Project Soil Report, Project Specifications, and shown on the engineering Drawings which shall be furnished to the Contractor.

B. Field Density Testing: Determine field density by methods outlined in ASTM D1556, ASTM D2167, ASTM D2937 or ASTM D6938.

C. Compaction Test Results Failing to Meet Specified Requirements: Bear costs of tests, which indicate failure to meet specified requirements. Do not place additional fill on a lift with any portion failing.

D. Contractor's Geotechnical Engineering Consultant shall perform density tests in accordance with following minimum schedule:

1. One every fill lift.
2. One every 2,500 square feet of subgrade area.
3. One every 5,000 square feet of paved area.
4. One per 5,000 cubic yards of different soil material.
5. One per 250 cubic yards of structural fill.
6. One per 10,000 square feet of excavation area.
7. Area where compaction is in question to verify uniform quality of Work.

E. Contractor's Geotechnical Engineering Consultant shall perform Atterberg Limit tests in accordance with following minimum schedule:

1. One test per 2,000 cubic yards of fill placed.
2. Area where classification of soil is in question to verify uniform quality of Work.

F. Inspection to Determine Suitability of Exposed Soil Strata for Its Intended Use: The Contractor's Geotechnical Engineering Consultant shall inspect all excavations for pipe and all subgrade preparation to determine that the proper soils strata has been exposed and that the material exposed is satisfactory for its intended use as shown on the Drawings. When any nonconformance is observed, it shall be reported to the Engineer.

3.07 DISPOSAL OF EARTHWORK DEBRIS OR WASTE

A. Remove noncombustible materials, including muck, broken concrete and metal, from Site and dispose in a legal manner.

END OF SECTION

SECTION 31 23 16
EXCAVATION

PART 1 GENERAL

1.01 SUBMITTALS

A. Informational Submittals:

1. Excavation Plan, Detailing:
   a. Proposed locations of stockpiled excavated material.
   b. Proposed onsite and offsite spoil disposal sites.
   c. Reclamation of onsite spoil disposal areas.

1.02 REFERENCES

A. Sewage and Water Board of New Orleans Standard Drawings (Revised October 25, 2018).

B. Occupational Safety and Health Administration (OSHA):

1. 29 CFR, Part 1926, Safety and Health Regulations for Construction.

C. GEOTECHNICAL INVESTIGATION REPORTS:

1. Eustis Engineering L.L.C., “Professional Geotechnical Services Sewerage and Water Board of New Orleans, Carrollton Water Treatment Plant, C-7 and C-8 Basin Demolition, Phase I and II: Engineering Report, New Orleans, Louisiana, April 12, 2018 (Included in Volume 4 Reference Documents).

D. 2023 Louisiana Laws Revised Statutes:

1. LA R.S. 48:251.1., Title 48 – Roads, Bridges, and Ferries § 48:251.1. Provision for Trenching and Shoring in Construction Contracts.

1.03 QUALITY ASSURANCE

A. Provide adequate survey control to avoid unauthorized over-excavation.

1.04 WEATHER LIMITATIONS

A. Material excavated when frozen or when air temperature is less than 32 degrees F shall not be used as fill or backfill until material completely thaws.

B. Material excavated during inclement weather shall not be used as fill or backfill until after material drains and dries sufficiently for proper compaction.

1.05 PROJECT/SITE CONDITIONS

A. Soil reports and other topographic or soil data shown on the Drawings or included in the reference documents are only for general information. Owner and Engineer are not responsible for their accuracy, completeness or usefulness and meaning. Make such additional investigations as required to become acquainted with site topography and sub-surface soil conditions for preparation of bid, and for successful execution of Work.

PART 2 PRODUCTS (NOT USED)

PART 3 EXECUTION

3.01 GENERAL

A. Excavate to lines, grades, and dimensions shown and as necessary to accomplish Work. Excavate to within tolerance of plus or minus 0.1 foot, except where dimensions or grades are shown or specified as maximum or minimum. Allow for forms, working space, granular base, topsoil, and similar items, wherever applicable. Trim to neat lines where concrete is to be deposited against earth.

B. Do not over-excavate without written authorization of Engineer.

3.02 TRENCH EXCAVATION:

A. For all trench excavation, ensure that the sides of the trench are stable, as evidenced by the sides of the trench being able to maintain a vertical cut face. Consider the sides unstable if fissures develop in the face of or adjacent to the open excavation; if the edge of the excavation subsides; if material ravels, spalls, or slumps from the face of the excavation; or if the bottom of the excavation bulges or heaves. In all cases of apparent distress, or when the trench excavation exceeds 5 feet in depth, sloping, benching, and shoring will be required in accordance with the OSHA trench safety standards, 29 CFR § 1926 (P). Consider these and any more stringent trench safety standards as minimum contract requirements.

B. Submission of bid and subsequent award of contract shall serve as certification that all trench excavation in excess of 5 feet shall be in compliance with LA R.S. 48:251.1.

C. Consider all available geotechnical information when designing the trench excavation safety system, including groundwater. Evaluate trench stability due to the effects of surcharge loads from adjacent structures, stored materials and equipment, or traffic. Ensure that excavated material is placed a sufficient distance back from the trench edge to preclude material from falling back into the trench, otherwise provide an adequate retention system.

D. Control rainfall runoff or excess moisture by proper selection of backfill materials, dewatering sumps, wells, well points, or other approved procedures during excavation, bedding installation, over-excavated trench backfilling, pipe placement, and pipe backfill.

3.03 MATERIALS

A. Complete all excavation regardless of the type, nature, or condition of the materials encountered.

3.04 TRENCH WIDTH

A. Minimum Width of Trenches:

1. Single Pipes, Conduits, Direct-Buried Cables, and Duct Banks:
   a. As per the Sewerage and Water Board Standard Plans and as shown in the drawings.
2. Multiple Pipes, Conduits, Cables, or Duct Banks in Single Trench: 18-inches greater than aggregate width of pipes, conduits, cables, duct banks, plus space between.
3. Increase trench widths by thicknesses of sheeting.

3.05 EMBANKMENT AND CUT SLOPES

A. Shape, trim, and finish cut slopes to conform with lines, grades, and cross-sections shown, with proper allowance for topsoil or slope protection, where shown.

B. Remove stones and rock that exceed 3-inch diameter and that are loose and may roll down slope. Remove exposed roots from cut slopes.

C. Round tops of cut slopes in soil to not less than a 6foot radius, provided such rounding does not extend offsite or outside easements and rights-of-way, or adversely impacts existing facilities, adjacent property, or completed Work.

3.06 STOCKPILING EXCAVATED MATERIAL

A. Stockpile excavated material that is suitable for use as fill or backfill until material is needed.

B. Post signs indicating proposed use of material stockpiled. Post signs that are readable from all directions of approach to each stockpile. Signs shall be clearly worded and readable by equipment operators from their normal seated position.

C. Confine stockpiles to within easements, rights-of-way, and approved work areas. Do not obstruct roads or streets.

D. Do not stockpile excavated material adjacent to trenches and other excavations, unless excavation side slopes and excavation support systems are designed, constructed, and maintained for stockpile loads.

E. Do not stockpile excavated materials near or over existing facilities, adjacent property, or completed Work, if weight of stockpiled material could induce excessive settlement.

3.07 DISPOSAL OF SPOIL

A. Dispose of excavated materials, which are unsuitable or exceed quantity needed for fill or backfill, offsite.

B. Dispose of excavated materials, which are unsuitable or not needed for fill or backfill, in designated spoil disposal areas.

END OF SECTION

SECTION 31 23 23
FILL AND BACKFILL

PART 1 GENERAL

1.01 REFERENCES

A. The following is a list of standards which may be referenced in this section:

1. ASTM International (ASTM):
    a. C117, Standard Test Method for Materials Finer Than 75-Micrometers (No. 200) Sieve in Mineral Aggregates by Washing.
    b. C136, Standard Method for Sieve Analysis of Fine and Coarse Aggregates.
    c. D75, Standard Practice for Sampling Aggregates.
    d. D698, Standard Test Methods for Laboratory Compaction Characteristics of Soil Using Standard Effort (12,400 ft-lbf/ft^3).
    e. D1556, Standard Test Method for Density and Unit Weight of Soil in Place by the Sand-Cone Method.
    f. -D4253, Standard Test Methods for Maximum Index Density and Unit Weight of Soils Using a Vibratory Table.
    g. D4254, Standard Test Method for Minimum Index Density and Unit Weight of Soils and Calculation of Relative Density.
    h. D6938, Standard Test Methods for In-Place Density and Water Content of Soil and Soil-Aggregate by Nuclear Methods (Shallow Depth).

1.02 DEFINITIONS

A. Relative Compaction:

1. Ratio, in percent, of as-compacted field dry density to laboratory maximum dry density as determined in accordance with ASTM D698.
2. Apply corrections for oversize material to either as-compacted field dry density or maximum dry density, as determined by Engineer.

B. Optimum Moisture Content:

1. Determined in accordance with ASTM Standard specified to determine maximum dry density for relative compaction.
2. Determine field moisture content on basis of fraction passing 3/4-inch sieve.

C. Relative Density: Calculated in accordance with ASTM D4254 based on maximum index density determined in accordance with ASTM D4253 and minimum index density determined in accordance with ASTM D4254.

D. Prepared Ground Surface: Ground surface after completion of required demolition, clearing and grubbing, scalping of sod, stripping of topsoil, excavation to grade, and subgrade preparation.

E. Completed Course: A course or layer that is ready for next layer or next phase of Work.

F. Lift: Loose (uncompacted) layer of material.

G. Geosynthetics: Geotextiles, geogrids, or geomembranes.

H. Well-Graded:

1. A mixture of particle sizes with no specific concentration or lack thereof of one or more sizes.
2. Does not define numerical value that shall be placed on coefficient of uniformity, coefficient of curvature, or other specific grain size distribution parameters.
3. Used to define material type that, when compacted, produces a strong and relatively incompressible soil mass free from detrimental voids.

I. Influence Area: Area within planes sloped downward and outward at 60-degree angle from horizontal measured from:

1. 1 foot outside outermost edge at base of foundations or slabs.
2. 1 foot outside outermost edge at surface of roadways or shoulder.
3. 0.5 foot outside exterior at spring line of pipes or culverts.

J. Borrow Material: Material from required excavations or from designated borrow areas on or near Site.

K. Selected Backfill Material: Materials available onsite that Engineer determines to be suitable for specific use.

L. Imported Material: Materials obtained from sources offsite, suitable for specified use.

M. Structural Fill: Fill materials as required under structures, pavements, and other facilities.

N. Embankment Material: Fill materials required to raise existing grade in areas other than under structures.

1.03 SUBMITTALS

A. Informational Submittals: Certified test results from independent testing agency.

1.04 QUALITY ASSURANCE

A. Notify Engineer when:

1. Soft or loose subgrade materials are encountered wherever embankment or site fill is to be placed.

2. Fill material appears to be deviating from Specifications.

PART 2 PRODUCTS

2.01 SOURCE QUALITY CONTROL

A. Gradation Tests:

1. As necessary to locate acceptable sources of imported material.
2. During production of imported material, test as follows:
   a. Granular Fill.
   b. Sand.
   c. Base Course Rock.
   d. Soil Cover Over Geotextiles.

B. Samples: Collected in accordance with ASTM D75:

1. During production of imported material, provide Samples as follows:
   a. Granular Fill.
   b. Sand.
   c. Base Course Rock.
   d. Soil Cover Over Geotextiles.
2. Clearly mark to show source of material and intended use.

2.02 EARTHFILL

A. Excavated material from required excavations and designated borrow sites, free from rocks larger than 3 inches, from roots and other organic matter, ashes, cinders, trash, debris, and other deleterious materials.

B. Material containing more than 10 percent gravel, stones, or shale particles is unacceptable.

C. Provide imported material of equivalent quality, if required to accomplish Work.

2.03 GRANULAR FILL

A. 1 inch minus crushed gravel or crushed rock.

B. Free from dirt, clay balls, and organic material.

C. Well-graded from coarse to fine and containing sufficient fines to bind material when compacted, but with maximum 8 percent by weight passing No. 200 sieve.

2.04 SAND

A. Free from clay, organic matter, or other deleterious material.

B. Gradation as determined in accordance with ASTM C117 and ASTM C136:

Sieve Size	Percent Passing by Weight
1/4-inch	100
No. 4	95 - 100
No. 200	0 - 8

2.05 WATER FOR MOISTURE CONDITIONING

A. Free of hazardous or toxic contaminates, or contaminants deleterious to proper compaction.

2.06 SOIL COVER OVER GEOTEXTILES

A. Particle Size: Maximum 1 inch.

B. Free of sharp angular pieces that may damage geotextile.

PART 3 EXECUTION

3.01 GENERAL

A. Keep placement surfaces free of water, debris, and foreign material during placement and compaction of fill and backfill materials.

B. Place and spread fill and backfill materials in horizontal lifts of uniform thickness, in a manner that avoids segregation, and compact each lift to specified densities prior to placing succeeding lifts. Slope lifts only where necessary to conform to final grades or as necessary to keep placement surfaces drained of water.

C. During filling and backfilling, keep level of fill and backfill around each structure even.

D. Do not place fill or backfill, if fill or backfill material is frozen, or if surface upon which fill or backfill is to be placed is frozen.

E. Tolerances:

1. Final Lines and Grades: Within a tolerance of 0.1 foot unless dimensions or grades are shown or specified otherwise.
2. Grade to establish and maintain slopes and drainage as shown. Reverse slopes are not permitted.

F. Settlement: Correct and repair any subsequent damage to structures, pavements, curbs, slabs, piping, and other facilities, caused by settlement of fill or backfill material.

3.02 BACKFILL UNDER AND AROUND STRUCTURES

A. Under Facilities: Within influence area beneath structures, slabs, pavements, curbs, piping, conduits, duct banks, and other facilities, backfill with granular

fill, unless otherwise shown. Place granular fill in lifts of 6-inch maximum thickness and compact each lift to minimum of 95 percent relative compaction as determined in accordance with D698 Method and 90 percent relative density.

B. Other Areas: Backfill with earthfill or granular fill to lines and grades shown, with proper allowance for topsoil thickness where shown. Place in lifts of 6-inch maximum thickness and compact each lift to minimum 90 percent relative compaction as determined in accordance with D698, Method J and relative density.

3.03 FILL

A. Outside Influence Areas beneath Structures, Pavements, Curbs, Slabs, Piping, and Other Facilities: Unless otherwise shown, place earthfill as follows:

1. Allow for 6-inch thickness of topsoil where required.
2. Maximum 8-inch thick lifts.
3. Place and compact fill across full width of embankment.
4. 90 percent relative compaction as determined in accordance with D698**,** Method relative density**.** Compact to 98 percent relative compaction as determined in accordance with D698, Method based on average of most recent four tests on like material. If any two of the four most recent tests falls below 96 percent or any one of the four preceding tests falls below 92 percent, additional compactive effort shall be required.
5. Dress completed embankment with allowance for topsoil, crest surfacing, and slope protection, where applicable.

3.04 SITE TESTING

A. Gradation:

1. One sample from each 1,500 tons of finished product or more often as determined by Engineer, if variation in gradation is occurring, or if material appears to depart from Specifications.
2. If test results indicate material does not meet Specification requirements, terminate material placement until corrective measures are taken.
3. Remove material placed in Work that does not meet Specification requirements at no cost to Owner. Replace with materials that meet specifications at no cost to Owner.

B. In-Place Density Tests: In accordance with ASTM D1556 and D6938. During placement of materials, test as follows:

1. Granular Fill.
2. Sand.
3. Backfill Around Buried Tanks.
4. Soil Cover Over Geotextiles.

3.05 REPLACING OVEREXCAVATED MATERIAL

A. Replace excavation carried below grade lines shown or established by Engineer as follows:

1. Beneath Fill or Backfill: Same material as specified for overlying fill or backfill.
2. Beneath Slabs-On-Grade: Granular fill.
3. Permanent Cut Slopes (Where Overlying Area is Not to Receive Fill or Backfill):
    a. Flat to Moderate Steep Slopes (3:1, Horizontal Run: Vertical Rise or Flatter): Earthfill.
    b. Steep Slopes (Steeper than 3:1):
        1) Correct over excavation by transitioning between overcut areas and designed slope adjoining areas, provided such cutting does not extend offsite or outside easements and right-of-ways, or adversely impacts existing facilities, adjacent property, or completed Work.
        2) Backfilling over excavated areas is prohibited, unless in Engineer's opinion, backfill shall remain stable, and over excavated material is replaced as compacted earthfill.

3.06 PLACING FILL OVER GEOSYNTHETICS

A. General:

1. Place fill over geosynthetics with sufficient care so as not to damage them.
2. Place fill only by back dumping and spreading only.
3. Dump fill only on previously placed fill.
4. While operating equipment, avoid sharp turns, sudden starts or stops that could damage geosynthetics.

B. Hauling: Operate hauling equipment on minimum of 3 feet of covering.

C. Spreading:

1. Spreading equipment shall be track mounted, low ground pressure, D-6 or lighter.
2. Operate spreading equipment on minimum of 12 inches of fill over geosynthetics.
3. Spread fill in same direction as unseamed overlaps to avoid separation of seams and joints.
4. Never push fill downslope. Spread fill over side slopes by pushing up from slope bottom. If access to bottom of slope is unavailable, progressively place fill, beginning at toe of slope and working upslope, with backhoe or dragline operated from top of slope. Limit distance material falls onto the geosynthetics to maximum of 2 feet.
5. Flatten wrinkles of geosynthetics in direction of spreading.
6. Maintain proper overlap of unseamed geosynthetics.

7. Avoid overstressing geosynthetics and seams.

D. Compaction: Compact fill only after uniformly spread to full thickness shown.

E. Geosynthetic Damage:

1. Mark punctures, tears, or other damage to geosynthetics, so repairs may be made.
2. Clear overlying fill as necessary to repair damage.
3. Repairs to geosynthetics shall be made by respective installers as specified in respective Specification section for each geosynthetic.

END OF SECTION

SECTION 31 41 00
SHORING

PART 1 GENERAL

1.01 SUBMITTALS

A. Informational Submittals:

1. Excavation support plan.
2. Movement monitoring plan.
3. Trench excavation plan.
4. Movement measurement and data and reduced results indicating movement trends.

1.02 QUALITY ASSURANCE

A. Provide surveys to monitor movements of critical facilities.

PART 2 PRODUCTS (NOT USED)

PART 3 EXECUTION

3.01 GENERAL

A. Design, provide, and maintain shoring, sheeting, and bracing as necessary to support the sides of excavations and to prevent detrimental settlement and lateral movement of existing facilities, adjacent property, and completed the Work.

3.02 EXCAVATION SUPPORT PLAN AND TRENCH EXCAVATION PLAN

A. Prepare excavation support and trench excavation plan addressing following topics:

1. Details of shoring, bracing, sloping, or other provisions for worker protection from hazards of caving ground.
2. Design assumptions and calculations.
3. Methods and sequencing of installing excavation support.
4. Proposed locations of stockpiled excavated material.
5. Minimum lateral distance from the crest of slopes for vehicles and stockpiled excavated materials.
6. Anticipated difficulties and proposed resolutions.

3.03 MOVEMENT MONITORING PLAN

A. Prepare movement monitoring plan addressing following topics:

1. Survey control.
2. Location of monitoring points.
3. Plots of data trends.
4. Interval between surveys.

3.04 REMOVAL OF EXCAVATION SUPPORT

A. Remove excavation support in a manner that shall maintain support as excavation is backfilled.

B. Do not begin to remove excavation support until support can be removed without damage to existing facilities, completed Work, or adjacent property.

C. Remove excavation support in a manner that does not leave voids in the backfill.

3.05 TRENCHES

A. Provide trench excavations exceeding 4 feet in depth with adequate safety systems meeting the requirements of the Washington Industrial Safety and Health Act, Chapter 49.17 RCW.

B. For trench excavation exceeding 5 feet in depth, provide adequate safety system meeting requirements of applicable state and local construction safety orders, and federal requirements.

END OF SECTION

SECTION 40 50 20
ABOVEGROUND POWER PLANT PIPING

PART 1 GENERAL

1.01 SUMMARY

A. This section covers minimum requirements for the installation of complete piping systems. Installation includes procurement, packaging, furnishing, receiving, storing, handling, fabrication, assembly, erection, supporting, cleaning, coating, insulating, filling, flushing, non-destructive examination, testing, restoration and inspection of complete aboveground piping systems, including loose piping furnished with equipment and miscellaneous structural attachments for supports.

B. In the event of any apparent conflict between this section and other referenced sections, codes, standards and documents Contractor shall refer the conflict to Engineer in writing for resolution.

C. No departures shall be made from this Specification and referenced sections, codes, standards and documents unless particular requirements are waived or modified in writing by Engineer. Contractor shall submit written requests for departures to Engineer for approval. Following the list of exceptions, if any, Contractor shall add a statement that no other exceptions are taken to this Specification.

1.02 DEFINITIONS

A. The following terms shall be understood to mean:

1. Large Bore Pipe (LB): Piping NPS 2-1/2 inch and larger.
2. Small Bore Pipe (SB): Piping NPS 2 inch and smaller.

1.03 REFERENCES

A. The following is a list of codes and standards which may be referenced in this section:

1. American Society of Mechanical Engineer's (ASME):
   a. A13.1, Scheme for the Identification of Piping Systems.
   b. B1.1, Unified Inch Screw Threads.
   c. B1.20.1, Pipe Threads, General Purpose (Inch).
   d. B16.25, Butt Welding Ends.
   e. B16.5, Pipe Flanges and Flanged Fittings.
   f. B16.9, Factory-Made Wrought Steel Buttwelding Fittings.
   g. B16.10, Face-to-Face and End-to-End Dimensions of Valves.
   h. B16.11, Forged Fittings, Socket-Welding and Threaded.

i. B16.20, Metallic Gaskets for Pipe Flanges: Ring-Joint, Spiral-Wound, and Jacketed.
j. B16.21, Non-Metallic Flat Gaskets for Pipe Flanges.
k. B16.22, Wrought Copper and Copper Alloy Solder-Joint Pressure Fittings.
l. B16.25, Buttwelding Ends.
m. B16.34, Valves – Flanged, Threaded and Welding End.
n. B31.1, Power Piping.
o. B36.10M, Welded and Seamless Wrought Steel Pipe.
p. BPVC Section II, Materials Part C Specification for Welding Rods, Electrodes, and Filler Metals.
q. BPVC Section IX, Boiler and Pressure Vessel Code – Welding and Brazing Qualifications.
r. PCC-1, Guidelines for Pressure Boundary Bolted Flange Joint Assembly.

2. ASTM International (ASTM):
   a. A153, Standard Specification for Zinc Coating (Hot-Dip) on Iron and Steel Hardware.
   b. A525, Standard Specification for General Requirements for Steel Sheet, Zinc-Coated (Galvanized) by the Hot-Dip Process.
   c. A780, Standard Practice for Repair of Damaged and Uncoated Areas of Hot-Dip Galvanized Coatings.
   d. F708, Standard Practice for Design and Installation of Rigid Pipe Hangers.
3. Pipe Fabrication Institute (PFI): ES-3, Fabricating Tolerances.
4. Manufacturers' Standardization Society of the Valve and Fittings Industry (MSS):
   a. SP-58, Pipe Hangers and Supports – Materials, Design and Manufacture.
   b. SP-69, Pipe Hangers and Supports – Selection and Application.
   c. SP-89, Pipe Hangers and Supports – Fabrication and Installation Practices.
5. U.S. Department of Labor Occupational Safety and Health Administration (OSHA): 29 CFR Parts 1926/1910.

1.04 REFERENCE SECTIONS

A. Section 01 33 00, Submittal Procedures.

B. Section 48 58 68, Welding of Power Plant Piping.

1.05 SUBMITTALS

A. In accordance with Section 01 33 00, Submittal Procedures.

B. Information Submittals:

1. Drawing list and submittal schedule.
2. Fabrication, testing, and commissioning sequence schedule.
3. Expediting reports.
4. Certified Material Test Reports (CMTRs).
5. Heat and lot numbers, which provide traceability for materials.
6. Manufacturer's Certificate of Compliance.
7. Spool Drawings for all piping that Contractor has shop fabricated.
8. Weld repair records complete with evaluations.
9. Weld maps for all field welds including the unique welder's identification symbol described in Section 48 58 68, Welding of Power Plant Piping, and the date the Work was performed.
10. Evaluations of radiographic film (RT), ultrasonic examinations (UT), liquid penetrant examinations (PT), and magnetic particle examinations (MT) and any other examinations performed. Radiographic evaluations shall show date, line number, weld identification symbol, film number, serial number, film combinations, interpretations, and other pertinent information for each weld radiographed.
11. NDE reports to document RT, UT, PT, MT and visual (VT) weld examinations.
12. Pressure test reports, containing at least the following information:
    a. Complete description of pipe system including boundary limits, complete line numbers, Drawings and P&ID's indicating test boundaries.
    b. Test description including test pressure, test medium, temperature of test medium, ambient temperature, time of day, test duration, leakage rate, and date of test.
    c. Record of joint repairs including date, extent of repairs, and responsible individual.
    d. Record of cleaning including date and responsible individual.
    e. Signature, date, and title of Engineer's or Owner's representative witnessing operation.

C. Action Submittals:

1. Contractor's Quality Control Manual and Quality Assurance Manual.
2. Inspection and Test Plan (ITP).
3. Inspector and NDE personnel qualifications.
4. Welding Procedure Specifications and Welding Performance Qualification Test results in accordance with ASME B31.1, Appendix III.
5. Fabrication Procedures, including but not limited to:
    a. Cutting procedures.
    b. Welding procedures.
    c. Hot work procedures (specifically around operating equipment).

d. Bending procedures.
e. Pre-heat and Post-weld Heat Treatment (PWHT) procedures.
f. NDE procedures.
g. PMI procedures.
h. Cleaning and blasting procedures.
i. Painting procedures.
j. Testing procedures.
k. Commissioning procedures.

6. Manufacturer's data sheets or catalog cut sheets for purchased piping components and in-line devices and recommendations for handling, storage, and installation of components.
7. Internal cleaning/flushing procedures (including steam blow, hydrolyzing, fuel gas air blows, etc.).
8. Pressure testing procedures.
9. Cleaning/Flushing fluid data.
10. Testing fluid data.
11. Record Drawing mark ups of Engineer furnished Drawings showing any modifications made by Contractor in field. Mark-ups shall be legible and made with red pen on Engineer's Drawings.
12. Manufacturer's Data Report (MDR), including but not limited to:
    a. Cover Page.
    b. Table of Contents.
    c. Inspection Release Certificate.
    d. Relevant documents such as mill certificates, weld maps, completed ITPs, test results, etc.
    e. Deviations, concessions, and Nonconformity Reports (if applicable).

1.06 QUALITY ASSURANCE

A. If applicable, welders and welding procedures shall be in accordance with Section 48 58 68, Welding of Power Plant Piping.

1.07 DELIVERY, STORAGE, AND HANDLING

A. General:

1. Store and handle materials in manner that shall minimize corrosion and prevent damage to pipe and piping components, including their end connections and coatings.
2. Store pipe aboveground on Contractor's furnished dunnage. Use sufficient number of supports to prevent pipe from sagging or coming into contact with ground. Either contoured or padded blocks shall also be used with coated pipe to prevent damage to coatings.

3. If pipe shall be partially or completely submerged due to rainfall, or any other cause, pipe shall be carefully examined, and water, together with any dirt, trash, or other foreign matter that may have entered shall be removed. Internal of pipe shall be blast cleaned back to original and wall thickness checked.

B. Acceptance at Jobsite:

1. Repair damage to pipe, fittings, specialty items, coatings, or linings to Engineers' satisfaction at no extra cost.
2. Damaged items not repaired to Engineer's satisfaction shall be removed from Site and replaced.

C. Special Piping (e.g., PVC, CPVC, polyethylene, fiberglass, plastic-lined steel, preinsulated) materials shall be handled and stored in accordance with manufacturer's recommendations.

D. End Protection: Material furnished by Contractor in accordance with this Specification shall have machined surfaces protected until installation as follows:

1. Flange Faces:
   a. Cover with bolted or clamped plastic or wood cover of adequate size and strength to prevent damage to face.
   b. Coat carbon steel and low-alloy flange faces with suitable rust preventative as outlined.
2. Buttweld Ends: Cover with plastic protectors to prevent damage to bevels.
3. Threaded Connections:
   a. Plugged or capped.
   b. Temporary thread protectors used during shipment and handling shall be plastic or sheet metal.

PART 2 PRODUCTS

2.01 MATERIALS

A. Piping materials: Provide as specified in Attachment 1: Pipe Specification Tables.

B. Valves:

1. Provide valves as specified in Section 40 55 00, Power Plant Valves and as specified in Attachment 1, Pipe Specifications.
2. Provide necessary grease and lubricant required in accordance with manufacturer's requirements.

C. Pipe Supports:

1. Supports and hangers for Engineer's designed piping shall be as shown on Engineer's support Drawings.
2. For all systems where pipe supports requirements are not specifically identified on the Drawings, the Contractor is to provide an engineered hanger system for the piping associated with this Project. The hanger system shall include hangers, rods, attachments, rollers, clamps and all components necessary to support the piping from the structure. Contractor shall refer to standard pipe support details depicted on the Drawings for minimum design and material requirements for the types of supports anticipated for this Project.
3. Contractor pipe support materials shall be furnished as specified.
4. Materials shall be in accordance with the ASTM specifications and shall meet the requirements of ASME B31.1 and AISC Steel Specification where applicable.
5. All supplemental structural steel support members shall be coated in accordance with Section 09 90 01, Painting and Protective Coatings.
6. Unfinished bolts shall conform to ASTM A307 Grade A; nuts shall conform to ASTM A194; lock washers shall conform to ASTM A436. All bolts and nuts shall be heavy hex type.
7. Copper Pipe Support and Hangers: Carbon steel ring, adjustable, copper plated.

PART 3 EXECUTION

3.01 GENERAL

A. The Work required by this Specification shall be conducted in compliance with applicable OSHA Standards.

3.02 FABRICATION

A. In accordance with ASME B31.1, ASME BPVC (as applicable) and this section.

3.03 INSTALLATION

A. General:

1. Piping shall follow the routings provided on the Drawings to the fullest extent possible.
2. Replacement of existing piping is to duplicate the routings of the current configuration. Contractor shall confirm the pipe routing(s) on the Drawings against existing conditions prior to releasing for fabrication. Contractor shall advise Engineer of any discrepancies found between existing conditions and the Drawings.

3. Cold spring is not allowed. Contractor shall notify Engineer for resolution if the existing piping system experiences cold spring upon dismantling.
4. Contractor shall conduct pre-installation inspections: Inspect each pipe spool, valve, threaded opening and gasket surface for damage and internal cleanliness prior to installing.

B. Piping:

1. In accordance with requirements of ASME B31.1, ASME BPVC (as applicable) and this section.
2. Install perpendicular or parallel to major equipment, building structure, and floor levels. Exception is given for piping which is specified with slope on the Drawing.
3. Piping, including tubing, shall be installed in accordance with the following requirements:
    a. Do not install above or within horizontal distance of 3 feet from electrical equipment such as switchgear, switchboard, control panel, motor control, contactor, communication equipment, batteries, battery charger, and motor generator.
    b. Install with minimum of 7 feet 6 inches of headroom over passageway and walkway. Pipe shall not be run near the floor, nor across walkways or working spaces where they would be a hazard.
    c. Where piping is specified to be field routed clearances shall be maintained to allow installation, operation, and maintenance of equipment.

C. Joints:

1. Threaded:
    a. Tapered and conforming to ASME B1.20.1.
    b. Pipe ends shall be reamed to full inside diameter to remove burrs and obstructions.
    c. For pipe systems exposed to line temperatures of less than 400 degrees F as identified on the Piping Line List, use Teflon as joint sealant for threaded joints and Never-Seez Mariner’s Choice by Bostik lubricating compound (or Engineer approved equal) for lines operating between 400 and 900 degrees F that will not be seal welded.
    d. If seal welded, make without thread lubricant or Teflon.
    e. Insulate dielectric threaded joints in accordance with Power Piping Standard PP-2, Dielectric Threaded Joints located at end of section.
    f. Threaded joints shall not under any circumstances be used in natural gas service.

2. Flanged Joints:
   a. Flanges conform to ASME B16.5.
   b. Installation shall be in accordance with ASME PCC-1.
   c. Make up with flange faces parallel, and bolt holes straddling normal horizontal and vertical centerlines of flanges, unless otherwise shown on the Drawings.
   d. Protect gaskets and flange faces from damage until installation is complete.
   e. Special precautions shall be taken when making up steel-to-cast iron flanged joints. Steel flange shall be flat faced.
   f. Gaskets:
      1) Temporary Flanged Joint: May be made up with less expensive sheet gaskets and special gaskets saved for permanent installation.
      2) Verify that proper gaskets are installed for permanent installation.
   g. Gaskets and gasket surfaces on flanges shall be clean, unpainted, and undamaged.
   h. Bolt threads shall be coated with Never-Seez Mariner's Choice by Bostik ("Or-equal," Engineer approved). The lubricant shall be applied to the full length of all bolt threads. All bolts shall extend completely through their nuts by at least one full effective thread, but not more than 3/8 inch.
   i. Flanges shall be made up by tightening diametrically opposite bolts in succession to load gasket evenly.
   j. Replace cap screws and machine bolts that have bottomed out before joint is tight with proper length screws or bolts.
   k. When flanged joint has been made up and subsequently loosened, install new gasket prior to retightening.
   l. Dielectric flanged joints shall be installed in accordance with Power Piping Standard PP-1, Dielectric Flanged Joints located at end of section.
   m. Install insulating flange kits to connect above ground piping to below ground piping which is cathodically protected.
   n. Fuel Oil Leak Detection:
      1) Contractor shall install tightly sealed flange belts on all flanges and flanged valves in oil services.
      2) On insulated piping and equipment, the tightly sealed flange belt shall include a 1/8-inch NPS connection nipple. Tubing shall be provided at the connection nipple and extend beyond the insulation to protect the insulation against any possible leakage from the flange connection.
      3) Other types of flanged belts may be used with Engineer and Owner approval.

3. Welded Joints:
    a. Buttweld Ends:
        1) Make for butt weld joints by mechanical beveling machines, unless otherwise approved by Engineer.
        2) Clean bevels to bright metal prior to welding.
        3) Repair any beveled edge of pipe that has been damaged to satisfaction of Engineer.
        4) Grind uneven and torch cut bevel faces to smooth true surface.
        5) Joint preparation in accordance with ASME B16.25.
    b. Butt weld ends welded completely by process other than GTAW shall be prepared in accordance with ASME B16.25 Fig. 2(a) or 3(a).
    c. When assembling socket weld joints, pipe or tube shall be bottomed out in socket, marked, and then withdrawn approximately 1/16 inch prior to welding.
    d. Pipe ends shall be reamed to full inside diameter to remove burrs and obstructions.

D. Austenitic Stainless Steel: The following requirements shall apply when fabricating austenitic stainless steel (SS) or nickel alloy components:

1. Fabricate stainless and nickel alloy pipe in a separate area from carbon and alloy steel pipe fabrication.
2. Control tools used in fabrication in such a way as to minimize contact with steel alloys or free iron. Brushes shall be identified and controlled for stainless steel use only.
3. Perform grinding with resin or rubber bonded aluminum oxide or silicon carbide grinding wheels which are identified and controlled for their use on these materials only.
4. Block sequence welding and peening of welds are prohibited.
5. Acceptable cleaning solvents are new or redistilled acetone (acetone reclaimed by other methods shall not be used), alcohol (ethyl, methanol, or isopropanol), or toluene (toluol). Halogenated cleaning solvents shall not be used for cleaning or degreasing.

E. Cutting and Drilling Structures:

1. Drilling and cutting of structures required for proper installation of piping or bolts shall be performed only with written permission of Engineer.
2. Holes in grating or floor plate shall be banded and reinforced as required for strength and safety in accordance with Section 05 10 00, Erection of Structural and Miscellaneous Steel.
3. Holes in concrete floor shall be provided with machine cut steel pipe sleeves.

F. Rainhoods, Flexible Weatherproofing, and Penetration Seals: Installed as shown on the Drawings for piping passing through roof, wall, and floor sleeves.

G. Equipment Connections:

1. When attaching piping to equipment connections, special care shall be taken that excessive stresses are not transmitted to, and imposed upon, such connections.
2. All equipment shall be grouted and/ or bolted to its foundation prior to final bolting or welding of the connection piping.
3. Piping connections to vessels or equipment shall be properly aligned before bolting up.
    a. For flanged connections, flange bolts shall slide into bolt holes freely and the spacing between the flanges shall be 1/16 inch unless specified otherwise on the Drawings.
    b. For welded connections, tolerances shall be within the limits of ASME B31.1 or the manufacturer's requirements, whichever is more restrictive.
4. Field heating to accommodate minor fit-up problems is not allowed.
5. Cold spring or pre-loading of nozzles is not allowed.
6. Connections which may cause excessive loading are not allowed.
7. Owner's Representative shall witness installation.
8. Piping which vibrates excessively shall be anchored or snubbed as directed by the Engineer.

H. Tie-ins:

1. Verify all tie-in dimensions before fabrication of final tie-in spools.
2. Tie-ins shall include all piping connections to new vessels and equipment, as well as connections to existing vessels, equipment, valves and piping.
3. Provide 7 days' notice to Owner prior to making tie-ins.
4. Inspection and approval of Owner is required prior to making all tie-ins.
5. Connections to existing lines shall be made in an approved manner and shall be accomplished with minimum interruption of service on the existing line. All connections to existing services shall have prior approval of the Owner.

I. Piping Tolerances:

1. Dimensional tolerances for fabricated piping shall be in accordance with PFI ES-3 and this Specification.
2. Internal misalignment of butt-weld ends in piping to be joined shall not exceed 1/16 inch for NPS 24 and smaller and 1/8-inch for NPS 26 and larger.

3. Dimensions of installed piping shall be in accordance with PFI Standard ES-3 unless otherwise noted.
4. Flanges in pipe runs shall not be out of square more than 3/64-inch per foot of outside diameter of flange.
5. Angular tolerances shall be plus or minus 1/2 degree.
6. After piping has been positioned, check flanges and connections to mechanical rotating equipment for alignment. Flanges shall be parallel within 1/64-inch per foot of flange diameter and not put any strain on equipment casings.
7. Flex hoses and expansion joints shall be installed straight and without strain or as indicated on the Drawings.
8. No cold springing shall be allowed for pipe fit-up.
9. Remove improperly fitted pipe and replace.

J. Branch and Instrument Connections: Conform to requirements of appropriate Material Specifications.

K. Valves:

1. In accordance with Attachment 1: Pipe Specification Tables and manufacturer's recommendations.
2. Control valves shall be installed in such a manner that they can be operated from main operating floors or platforms. Use of ladders or special operating devices may be used for valves not normally operated.
3. Valves shall be installed with all identification tags attached. Tags shall remain attached to the valves permanently.
4. Drawings shall normally indicate the position of valve stems on sizes 2 inches and above. Stems shall not be installed in a position below horizontal.

L. Pipe Supports:

1. For all systems where pipe supports requirements are not specifically identified on the Drawings, the Contractor is to provide an engineered hanger system for the piping associated with this Project. The hanger system shall include hangers, rods, attachments, rollers, clamps and all components necessary to support the piping from the structure. Contractor shall refer to standard pipe support details depicted on the Drawings for minimum design and material requirements for the types of supports anticipated for this Project.
2. All structural steel required to support the hangers shall be included.
3. Where not specifically indicated otherwise on the Drawings, pipe hangers shall comply with MSS SP-58.

4. General:
    a. Unless specifically identified otherwise on the Drawings, support spacing for horizontal pipe hangers shall be in accordance with MSS SP-58 and table 121.5 of ASME B31.1.
    b. Weld pipe supports to structural steel framing by shielded metal arc method only and in accordance with Section 48 58 68, Welding of Power Plant Piping, and AWS D1.1. Welds shall run parallel to axis of beam span and shall be staggered, with cooling allowed between subsequent deposits.
    c. Make weldments of attachments to piping prior to postweld heat treatment.
    d. Flame cut holes on structural steel and/or base plates is specifically not allowed.
    e. Adequate temporary supports shall be installed during erection and testing so as not to overstress tubing, piping, or equipment to which piping is connected.
    f. Field located posts and stanchions shall not obstruct the access to equipment and operational areas.
    g. All pipe support components such as clamps, insulation protection saddles, welded lugs, and pipe stanchions which come into contact with the pie material shall be made of material compatible with pipe material.
    h. On long straight pipe runs, every third support location shall include lateral guide.
    i. On long straight pipe runs exceeding 50 feet an axial restraint shall be located approximately mid-way on the straight run of pipe.
    j. Anchors and guides for pipelines shall be furnished when required for holding the pipeline in position and to mitigate excessive stress on connected equipment and structures. Anchors shall be of the welded steel plate and structural shape type or equivalent. All anchors shall be designed for rigid fastening to the structure, either directly or through brackets. Anchors or guides shall be capable of withstanding the forces imposed by thermal, seismic, vent discharge and dead loads.
    k. Pipe stanchions:
        1) LB Piping: Stanchion base plates shall sit directly on structural steel members. If required, grating shall be removed and banded in accordance with Section 05 10 00, Erection of Structural and Miscellaneous Steel.
        2) SB Piping: Stanchion base plates may sit on grating with written approval of Engineer. Stanchions shall not to be welded to grating.
        3) Stanchions shall not to be welded to structural steel unless shown on the Drawings.

l. Pipe shoes shall be checked to assure that the pipe shoes are properly installed, free to slide supports are not to be welded to the supporting steel.
m. Brackets shall be made of welded steel and shall be designed for all conditions to which they will be subjected.
n. Wherever practical, standard pipe support hardware components shall be utilized in the design of pipe supports.
o. U-bolts shall be used only as guides for horizontal and vertical pipe and shall not be used to restrain the primary support load in the axial direction of the U-bolt.
p. Support point spacing shall prevent excessive sag, bending, vibration and shear stresses. Where calculations are not made, maximum span of pipe supports for horizontal straight piping without concentrated loads shall be in accordance with the requirements of MSS SP 58.

M. Vents and Drains:

1. Contractor shall locate and install valved high point vents and low point drains in all field routed piping.
2. Contractor shall submit proposed locations of vents and drains to Engineer for approval.

N. Piping Furnished With Equipment:

1. All piping, valves, and fittings furnished with equipment shall be installed in accordance with the manufacturer's requirements and this section.
2. In the event of a conflict between the manufacturer's requirements and the requirements of this section the Engineer shall be notified in writing for resolution of the conflict.

3.04 FIELD FINISHING

A. Piping, Components and Supports:

1. Field routed piping shall be prime coated by Contractor per Section 09 90 01, Painting and Protective Coatings. Note that shop fabricated piping shall be prime coated (and finish coat as applicable) in the shop environment.
2. Touchup paint shall be provided by Contractor per Section 09 90 01, Painting and Protective Coatings.
3. Finish coats (color) for uninsulated pipe shall be provided by Contractor per Section 09 90 01, Painting and Protective Coatings.
4. For piping system colors, refer to Painting Color Schedule at the end of this section.

5. Field welded supports shall be coated with a cold galvanizing compound in accordance with ASTM A780. Repair any damaged galvanized plating with a coating of cold galvanizing compound.

B. After final painting or installation of insulation jacketing, all piping systems shall be labeled in accordance with ASME A13.1 and Drawing M603.

3.05 FIELD QUALITY CONTROL

A. General:

1. Inspect, examine, clean, and test piping in accordance with requirements of ASME B31.1, Chapter VI, and this section.
2. Procedures shall be subject to approval of Engineer.
3. Owner shall witness each critical operation (e.g., pressure testing, steam blow, hydrolazing, cleaning and drying).

B. Welded Joint Inspection and Testing: In accordance with Section 48 58 68, Welding of Power Plant Piping.

C. Pressure Tests:

1. General:
   a. Piping shall be tested in accordance with ASME B31.1 Criteria. All pressure tests shall be hydrostatic, unless otherwise specified on the Piping Line List.
   b. Notify Owner minimum of 48 hours prior to pressure test.
   c. Any intentional venting or pressure relief of hydrocarbons to atmosphere shall be coordinated with the Engineer and the Owner’s Environmental representative.
   d. Document field tests with test report witnessed by Owner.
   e. Vents and drains that are downstream of last block valve and open to atmosphere do not require pressure testing.
   f. A safety valve or relief valve shall be used at the pressure source to protect systems under test. The Contractor shall be responsible for venting all sections of piping systems and vessels not under direct test to prevent overpressuring any part of system through valve leakage or excess flows.
   g. Flanged joints at which test blinds have been removed do not require testing.
   h. Remove filter elements from system prior to pressure testing.
   i. Equipment appurtenances such as level bridles, shall be tested separately when equipment is excluded from pressure testing.
   j. Control valves shall be included in pressure test with valves in open position.
   k. Verify pressure relief devices have test gags and components included in test can withstand test pressure.

l. Tag all valves included in test boundaries to indicate status, i.e., open for block and control valves, internals removed or blocked open for check valves.

m. In event piping system cannot be successfully pressure tested, correct problem and retest.

2. Test Records:
   a. Records shall be made of each piping system test utilizing the Piping Checklists, or Engineer approved substitute (Refer to Appendix A and C). Original forms, when completed, shall be submitted to the Engineer with the turnover package, with a copy retained in the Contractor's Field QC file as a permanent record. These records shall include the following information:
      1) Mark-ups of Engineer's P&ID Drawings showing boundaries of test including status of instruments, valves, in-line instruments and any temporary spool pieces utilized.
      2) Test description including date of test, test pressure, test medium, temperature of test medium, ambient temperature, time of day, test duration, and leakage rate.
      3) Test results.
      4) Record of any joint repairs including date, extent of repairs, and responsible individual.
      5) Record of any re-tests required due to joint failures.
      6) Record of cleaning including date and responsible individual.
      7) Record of disinfection of potable water system including date and responsible individual.
      8) Name of test operator.
      9) Signature of Owner's representative witnessing operation.
3. Pressure Test:
   a. Pretest Inspection:
      1) Notify Owner when piping system is ready for pretest inspection.
      2) Verify components in piping system conform to requirements of appropriate Pipe Material Specifications (e.g., material, wall thickness, valve numbers, valve ratings, flange ratings, etc.) and latest revision of Piping and Instrumentation Diagrams, and is ready for pressurization.
      3) Owner will inspect each piping system using copy of Piping Pretest Checklist located at end of section.
      4) Joints shall be left exposed (uninsulated and unpainted) until testing has been completed.
      5) Isolate equipment listed in Status of Equipment During Pressure Test, located at end of section, from piping systems that will be pressure tested.
      6) Supports, shoes, guides, and anchors shall be inspected for proper type, installation, and location.

7) Spring supports shall have their hydrotest pins installed.
8) Inspect plugs and caps for conformance to Specification.
9) Valve tags shall be inspected for purpose of identifying status. Tag shall indicate block and control valves are open or that check valves have had their internals removed, jacked open, or left unaltered.

b. Hydrotest Procedure: In accordance with requirements of ASME B31.1 and this Specification.
1) Quality of test fluid shall not be detrimental to equipment or pipe system materials. Obtain approval by Engineer before using any test fluid.
2) Water for testing equipment and piping containing austenitic stainless steel materials shall contain less than 50 ppm chloride ion.
3) Do not perform hydrostatic test on metallic systems when temperature is below 32 degrees F, without Engineer approval.
4) Observe each pipe system to ensure that supports, including spring supports, are not overloaded due to weight of test medium.
5) Remove insulation that becomes wet during hydrostatic testing.
6) Test pressures shall be measured at low point of any line or system being tested to avoid excessive pressures.

c. Pneumatic Test:
1) Pneumatic testing shall be done with compressed air or nitrogen.
2) Do not perform pneumatic test when temperature is below 60 degrees F, without Engineer approval.
3) Lines to be pressure tested by pneumatic testing shall be given an application of a leak detection fluid which shall reveal the presence of leaks by an easily visible means, such as bubble formation. Generally pneumatic test pressures shall be limited to 100 psig. When specified, pneumatic tests with a test pressure that is above 100 psig, the piping shall be taken to test pressure, held for a suitable time, then lowered to system operating pressure to conduct visual inspection.
4) Air compressors shall be equipped with discharge filters for removal of water, oil and foreign matter. Maximum discharge temperature of oil lubricated air compressors shall be 300 degrees F.

d. Initial Service Testing:
1) In accordance with ASME B31.1.
2) Permissible only with prior written authorization from Owner.

3) Notify Owner minimum of 48 hours prior to Initial Service Tests.

e. Post-Pressure Test Inspection:

1) Notify Owner when piping system is ready for post-test inspection.
2) Verify piping system has been flushed, dried, restored, and connected to satisfaction of Owner, and is ready for operation.
3) Pressure relief valves, spring hangers, and expansion joints shall be inspected to see that gags, hydrotest pins, shipping spacers, and shipping ties have been removed. Spring hangers shall be set to the Cold position.
4) Owner will inspect each piping system using Piping Test and Post-Test Checklist located at end of section.

D. Repair of Leaks and Defects:

1. Repair leaks, and perform additional examination and retest.
2. Remove or repair defective joints as required by Engineer.
3. Welds requiring repair shall be repaired in accordance with Section 48 58 68, Welding of Power Plant Piping.
4. Arc Burn: See appropriate section(s) of Section 48 58 68, Welding of Power Plant Piping.
5. Repairs shall be made in accordance with procedures approved by Engineer.
6. Examination and inspection of completed joint repair shall be same as required for original joint or by alternate method that will ensure equal or greater soundness of joint.
7. Repair of base weld metal shall be allowed only with prior written authorization of Engineer.
8. Contractor's inspector shall document weld repairs and submit records to Engineer for approval prior to re-testing system.

E. Restoration:

1. After successful completion of hydrostatic testing, flush and drain lines. Water used for flushing and pressure testing shall be disposed of as directed by Owner.
2. Open valves that were closed during hydrostatic test, for drainage of bonnet cavity. Partially open and close valves during flushing operation to flush foreign material out of system.
3. Care shall be exercised in draining vessels and piping so as not to create a vacuum. Open vents within system prior to draining. After piping systems and vessels are drained, close vents, drains, and other internals that were opened prior to testing.
4. Remove temporary blanks and blinds.

5. Valves, orifice plates, expansion joints, and short pieces of piping which have been removed shall be reinstalled with proper gaskets in place.
6. Valves:
    a. Notify Owner prior to valve restoration so Owner may witness restoration.
    b. Restore, if required, valves after successful pressure testing.
    c. Restoration shall include removal of jacks; reinstallation of flappers, balls, and pistons; and replacing of bonnet gaskets on valves that were disassembled.
    d. Owner will sign tag that was previously placed on valve and indicate that valve is ready for operation.
7. Remove temporary piping supports after lines have been drained. Restraining parts that were supplied with hangers and expansion joints for their protection when carrying test loads shall be removed upon completion of system test and permanently reattached to supports with 3/16-inch minimum stainless steel wire.
8. Remove and replace special length bolting and temporary gaskets with line class bolts and gaskets.
9. Each system shall be connected to equipment where applicable and be ready for operation.
10. Seal terminal points of piping systems that are left for future connections with blinds or plugs.

F. Special Cleaning and Drying: Oil, gas, air, and chemical piping which has been flushed or hydrostatically tested shall be thoroughly purged and dried with air or nitrogen before placing in service.

3.06 FLUSHING AND CLEANING

A. Fuel oil delivered to the existing day tank shall meet the requirements within the Solar ES9-98 Fuel Specification. Reference Volume 4 Reference Material for this document.

B. The Contractor shall meet with the Owner prior to start of cleaning/flushing to review procedures and also circulation routing through the piping. System-specific chemical/cleaning agent requirements shall be confirmed (where applicable) prior to flushing and cleaning.

C. Diesel fuel piping cleaning and flushing shall be performed in accordance with the turbine manufacturer's recommended procedures and requirements to remove construction debris and contaminants prior to commissioning or preservation. Contractor shall provide all the necessary equipment, consumables, and personnel for this procedure.

1. Diesel flush medium shall be clean and free of water or contaminants, and fuel quality shall be suitable for system flushing.
2. Flushing shall be performed using temporary pumps and hoses and remove all sensitive components from the system prior to flushing.
3. Flow rates through the piping system shall be 2 to 3 times the normal flow rate of the system. Flow rates shall be set at the highest practical level achievable to promote effective removal of contaminants. Piping shall be flushed in manageable sections to ensure adequate circulation.
4. Strainers and filters shall be monitored and inspected periodically during the flushing procedure.
5. Flushing shall be considered complete when all the following is satisfied.
    a. No visible construction debris, scale, rust, weld slag, or foreign material is observed in flush filters, strainers, or drained fluid. A 10-micron bag filter element shall be used on the outlet of the flushed component as the screening point. Acceptance criteria shall be no visible particles in the 10-micron bag.
    b. Filters and strainers show no evidence of ongoing debris generation.
    c. Differential pressure across flush filtration remains stable during circulation.
    d. Flush fluid is visually clear and free of free water.
    e. The Owner's representative confirms that the system is clean and ready for service.
6. Remove all temporary flushing equipment and restore permanent piping components.
7. Submit a detailed flushing procedure for review and approval prior to commencing any flushing activities. The submittal shall include, at a minimum, proposed equipment, flushing medium specifications, flow rates, filtration setup, acceptance criteria, and a step-by-step execution plan.
8. Utilize diesel fuel that is compliant with the turbine manufacturer's requirements for flushing. Verification of fuel quality shall be provided through testing, including submission of fuel type, samples and test results both prior to flushing and upon completion, in accordance with turbine manufacturer's requirements.
9. Coordinate required inspection and witness hold points during the flushing process. Final acceptance of flushing operation shall include formal witness and sign-off by the Owner's representative confirming the system meets specified cleaniless criteria.

10. Provide a comprehensive report detailing flushing procedures, dates, durations, flow rates, inspection reports, and final acceptance.

3.07 FIELD SURVEY OF ENGINEERED SUPPORTS

A. Contractor shall provide a piping engineer, experienced in critical piping system design and analysis, to be present during plant startup to monitor the condition and movement of variable spring hangers, constant support hangers and snubbers; before, during and after heat-up and cool-down of systems. The piping engineer shall prepare a written report to document any abnormal conditions affecting engineered support functionality.

3.08 SUPPLEMENTS

A. The supplements listed below are Engineer approved alternates, following "End of Section," are part of this Specification:

1. Piping Pretest Checklist.
2. Status of Instruments During Pressure Test.
3. Piping Test and Post-Test Checklist.
4. Power Piping Standard PP-1, - Dielectric Flanged Joint.
5. Painting Color Schedule.
6. Piping Material Specifications.

END OF SECTION

INTENTIONALLY LEFT BLANK

PIPING PRETEST CHECKLIST

INSPECTION DATE _____

INSPECTED BY _____

PLANT _____ CONTRACTOR _____

_____

SYSTEM/LINE NO. _____ DWG REF. _____

_____

	Description	Owner Initials	Contractor Initials	Date
1.	All material/equipment (valve, pipe materials, specialty items) comply with Specifications and Piping and Instrumentation Diagrams.			
2.	All threaded connections, flange bolting, gaskets, and socket welds correctly installed.			
3.	All PWHT completed and acceptable.			
4.	All NDE (hardness, MT, PT, RT, UT) acceptable			
5.	Instrumentation protected/secure.			
6.	Rotating equipment internals protected/secure.			
7.	Expansion joints, relief valves, orifice plates, meters, control valves, filter elements, internal refractories, and other special items protected/secure.			
8.	Gauges calibrated and installed.			
9.	Status of block and control valves and check valve internals have been tagged.			
10.	Blinds correctly installed.			
11.	Temporary plugs and caps have been replaced.			
12.	Low point drains are installed as needed.			
13.	High point vents are installed as needed.			

REMARKS

_____

_____

_____

_____

INTENTIONALLY LEFT BLANK

STATUS OF INSTRUMENTS DURING PRESSURE TEST (1)

	Block & Vent	Remove	Blind Off	Include In Test	Refer to Notes
Analyzers	X				
Control Valves				X	
Flow Indicating Switches, Bellows Type	X				
Flow Instruments-D/P Cell & Bellows Type	X				
Flow Instruments-Rotameters		X			2
Flow Meters-Positive Displacement Type			X		2
Flow Meters-Turbine Type			X		2
Flow Switches-Vane Type		X			
Gauge Glasses				X	3
Level Instruments-Displacer Type				X	3
Level Instruments-D/P Cell & Bellows Type	X				
Level Switches-Float Type				X	3
Orifice Plates		X			4
Pressure Gauges	X				
Pressure Instruments-All Types	X				
Pressure Regulators		X			
Pressure Switches	X				
PSV's			X		5,2
PSV's-3/4" and 1" Screwed		X			2
Rupture Discs		X			
Steam Traps		X			2
Thermowells				X	

NOTES:

1. All instruments shall be protected from damage. In preparation for cold weather and during cold weather all instruments shall be drained and process lead lines blown out with air or nitrogen.
2. Fabricate and install temporary spool or cap if necessary for test.
3. Caution - do not overpressure instrument. Contractor shall verify maximum test pressure allowed.
4. Install after hydrotesting and line flushing.
5. Blinds are not required on PSV outlets discharging into a system being tested at 15 psig or less.

INTENTIONALLY LEFT BLANK

PIPING TEST AND POST-TEST CHECKLIST

INSPECTION DATE _____ TEST PACKAGE NO._____

INSPECTED BY _____

PLANT _____CONTRACTOR _____

SYSTEM/LINE NO. _____ DWG REF. _____

TEST MEDIUM _____ TEST PRESSURE, PSIG _____ TEST TEMP, °F _____

TEST PRESSURE HOLDING TIME _____ MIN AMBIENT TEMP ____

Description	Owner Initials	Contractor Initials	Date
1. Test Complete and Acceptable			
2. If partial tests were made, define:			
3. System ready for post-test check:			
a. Test blinds removed.			
b. Final line flush complete.			
c. Vents properly plugged.			
d. Drains properly valved and plugged.			
e. Instruments properly installed.			
f. Expansion joints, relief valves, control valves, in-line meters, filter elements, orifice plates, in-line strainers, and other special items clean and properly installed			
g. Rotating equipment properly in-line.			
h. Temporary supports removed.			
i. Permanent supports restored			

REMARKS

_____

_____

_____

_____

INTENTIONALLY LEFT BLANK

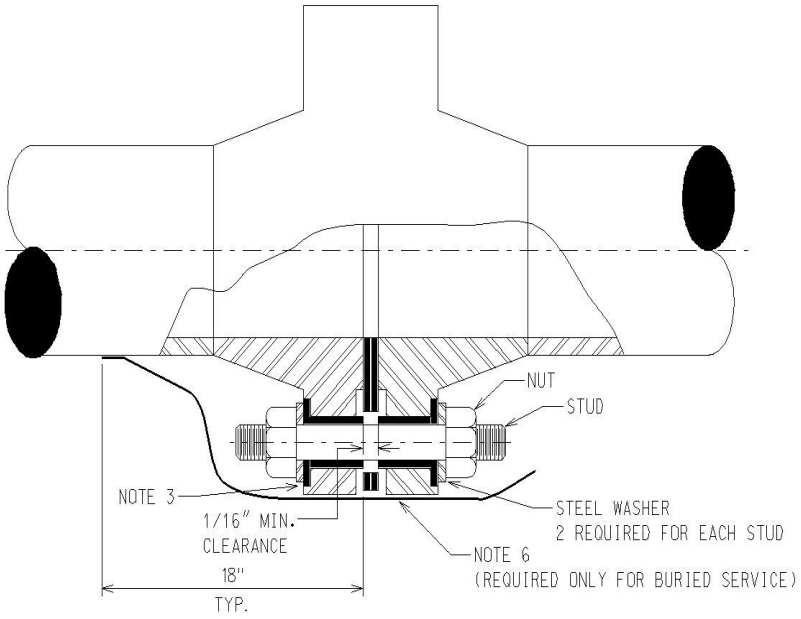

NOTES:

1. GASKET SHALL BE OF NON-METALIC OR NON-GRAPHITE-IMPREGNATED MATERIAL. MATERIAL TO BE PHENOLIC LAMINATE AS SUITABLE TO SERVICE TEMPERATURE OF LINE AND THE FLANGE TYPE, PSIPRODUCTS, F. H. MALONEY OR EQUAL.

2. SLEEVES AND WASHERS SHALL BE ONE PIECE OF ACETAL RESIN OR NYLON MATERIAL. USE TWO FOR EACH STUD.

3. REMOVE BURRS OR OTHER FOREIGN PARTICLES FROM FLANGE FACES, BOLT HOLES AND STUDS.

4. FOLLOW MANUFACTURER'S RECOMMENDED PRACTICE FOR INSTALLATION.

5. TEST FLANGE AFTER INSTALLATION AND REPLACE ANY CRACKED SLEEVES OR WASHERS WHICH MAY CAUSE "SHORTING OUT." USE CONTINUITY TESTER, FLASHLIGHT WITH LEADS, ETC.

6. AFTER INSTALLATION IS COMPLETE, PRIMER AND THREE WRAPS OF TAPE SHALL BE APPLIED TO FLANGE PERIMETERS AND EXTENDED 18" ON BOTH SIDES OF FLANGES. USE SCOTCHRAP, POLYKEN, OR EQUAL TO MANUFACTURER'S INSTRUCTIONS.

POWER PIPING STANDARD

PP-1
DIELECTRIC FLANGED JOINT

PP1.DGN 1 NONE

WHD 08/16/06
CAJ 08/16/06
SDH 08/16/06
NA / /

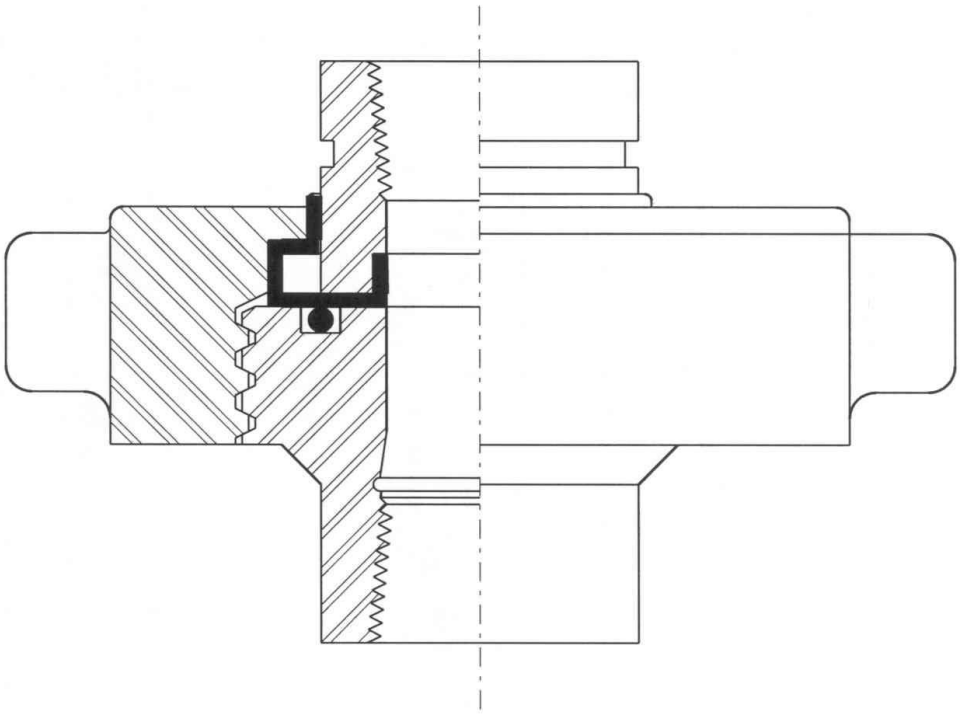

POSITIVE PRESSURE SEAL PROVIDED BY "O" RING FOR USE WITH GAS, CRUDE, BRINE, WATER, AIR, AMMONIA AND LUBRICATING OILS - UP TO 275 DEG. F.

SIZES: 1000# CWP OCTAGON NUT
1/2" - 3/4" - 1" - 1 1/4" - 1 1/2" - 2"

SIZES: 3000# CWP HANDLE BAR OR OCTAGON NUT
1/2" - 3/4" - 1" - 1 1/4" - 1 1/2" - 2" - 2 1/2" - 3"

AFTER INSTALLATION IS COMPLETE, PRIMER AND THREE WRAPS OF TAPE SHALL BE APPLIED TO UNION AND EXTENDED 18" ON BOTH SIDES OF UNION. USE SCOTCHRAP, POLYKEN, OR EQUAL TO MANUFACTURER'S INSTRUCTIONS. COATING IS ONLY REQUIRED FOR BURIED SERVICE.

POWER PIPING STANDARD

PP-2
DIELECTRIC THREADED JOINT

PP2.DGN 0

WHD 11/12/01
SDH 11/12/01
SDH 11/12/01
NA / /

NONE

PAINTING COLOR SCHEDULE

Designation of Colors	
Fluid Service	**Color**
Fuel Gas	Safety Yellow
Fuel Oil	Safety Brown
Instrument Air	Safety Blue
Vent	Safety Black

Notes:

1. Colors preceded by the word "Safety" shall meet the requirements of ANSI Z535.1
2. Color designation is for:
    a. Final top coat of uninsulated piping.
    b. Coated jacket color for insulated piping.
3. Manufacturer standard color (typically gray or aluminum) shall be used for:
    a. Primer.
    b. Final coat on insulated pipe.
    c. On pipe surface for Paint System No. 14 and 15 where color is not recommended per high operating temperatures and product integrity.
4. Refer to existing piping systems for color. Final color scheme shall be approved by Owner prior to implementation.

INTENTIONALLY LEFT BLANK

SEWERAGE AND WATER BOARD OF NEW ORLEANS
WEST POWER COMPLEX

PIPING DESIGN STANDARDS

These Piping Design Standards have been issued and revised as indicated below. If there is a later revision than now in your possession, please destroy the previous issue, or clearly mark it "SUPERSEDED".

REV. NO.	REVISION DATE	BY	DESCRIPTION
0	12/2/25	LMR	INITIAL REVISION FOR REVIEW

SEWERAGE AND WATER BOARD OF NEW ORLEANS
WEST POWER COMPLEX

DESIGN STANDARD NUMBERING

These Piping Design Standards have been issued and revised as indicated

1. There are two types of Design Standards:

a) Standards based on actual service conditions. Piping components in these Design Standards are selected based on design conditions of the system. Typical standard numbering is a single digit System Code followed by a single digit Material Code followed by a two digit Pressure Class Code (ex. SA25).

System Code		Material Code	
A=	Instrument & Plant Air, CO2, N2, H2, RO & Demin. Water	A=	Alloy Steel
C=	Condensate, Blowdown, Feedwater	B=	Hastelloy
F=	Fire Protection	C=	Carbon Steel, Cast Iron
H=	Hydrocarbon, Fuel Gas, Natural Gas, Amine, Ammonia Vapor	G=	Galvanized CS
O=	Lube & Seal Oil	H=	HDPE
S=	Steam	N=	Alloy 20
T=	Potable Water	P=	PVC, CPVC
W=	Water, Wastewater	S=	Stainless Steel
X=	Chemicals & Chemical Feed, Phosphate, etc…	U=	Copper

Pressure Class Code

01=	150#
03=	300#
06=	600#
09=	900#
15=	1500#
25=	2500#

b) Standards based on flange rating. Piping components in these Design Standards are selected based on the full rating of the flange material within the temperature range indicated. Standards of this type are identified by the letters "MC" followed by a numerical sequence (ex. MC23).

SEWERAGE AND WATER BOARD OF NEW ORLEANS
WEST POWER COMPLEX

PIPING DESIGN STANDARD INDEX

DESIGN STD	REV.	CORR. ALLOW.	MATERIAL	FLG RATING	SERVICE:
HC01	0	0.0625	A106 GR B	150# RF	LOW PRESSURE NO. 2 FUEL OIL
HC01A	0	0.0625	A106 GR B	150# RF	DOUBLE WALL CONTAINMENT, LOW PRESSURE NO. 2 FUEL OIL

SEWERAGE AND WATER BOARD OF NEW ORLEANS
WEST POWER COMPLEX

SWBNO - WEST POWER COMPLEX

PIPING DESIGN STANDARD HC01

LOW PRESSURE NO. 2 FUEL OIL

APPROVED BY: LMR | REVISION: 0 | DATE: 45993

REV	SHORT DESCR	SIZES	LONG DESCRIPTION	LARGE END SIZE	NOTE NO.	REFERENCE
			**** GENERAL NOTES **** (SEE NOTES 2, 206)			
			**** PIPE ****			
	PIP	1/2 - 2	PIPE, SCH 80 SMLS ASTM A106 GR B		761	
	PIP	2 1/2 - 10	PIPE, STD WALL SMLS ASTM A106 GR B			
			**** PIPE NIPPLES ****			
	NIPTBE	1/2 - 2	NIPPLE SCH 80 SMLS ASTM A106 GR B TBE			
	NIPTOE	1/2 - 2	NIPPLE SCH 80 SMLS ASTM A106 GR B TOE			
	NIPPBE	1/2 - 2	NIPPLE SCH 80 SMLS ASTM A106 GR B PBE			
			**** FITTINGS ****			
	ELL	1/2 - 2	ELBOW, 90 DEG 3000# SW ASTM A105			
	45L	1/2 - 2	ELBOW, 45 DEG 3000# SW ASTM A105			
	TEE	1/2 - 2	TEE, 3000# SW ASTM A105			
	CPL	1/2 - 2	COUPLING, 3000# SW ASTM A105			
	CPL	1/2 - 2	REDUCING COUPLING, 3000# SW ASTM A105			
	CAP	1/2 - 2	CAP, 3000# SW ASTM A105			
	PLG	1/2 - 2	PLUG, ROUND HEAD SW ASTM A105			
	ELL	2 1/2 - 8	ELBOW, LR 90 DEG STD WALL ASTM A234 WPB			
	45L	2 1/2 - 8	ELBOW, 45 DEG STD WALL ASTM A234 WPB			
	TEE	2 1/2 - 8	TEE, STD WALL ASTM A234 WPB			
	CNCRED	2 1/2 - 8	REDUCER, CONC STD WALL A234 WPB			
	ECCRED	2 1/2 - 8	REDUCER, ECC STD WALL A234 WPB			
	CAP	2 1/2 - 8	CAP, STD WALL ASTM A234 WPB			
			**** OLETS ****			
	WOL	3 - 8	WELDOLET, STD WALL ASTM A105		320	
	SOL	1/2 - 2	SOCKOLET, 3000# ASTM A105		465	
			**** FLANGES, GASKETS & BOLTING ****			
	FLGSW	1/2 - 2	FLANGE, 150# RF SW SCH 80 BORE ASTM A105			

SEWERAGE AND WATER BOARD OF NEW ORLEANS
WEST POWER COMPLEX

SWBNO - WEST POWER COMPLEX

PIPING DESIGN STANDARD HC01

LOW PRESSURE NO. 2 FUEL OIL

APPROVED BY: LMR | REVISION: 0 | DATE: 45993

REV	SHORT DESCR	SIZES	LONG DESCRIPTION	LARGE END SIZE	NOTE NO.	REFERENCE
	WNK	2 1/2 - 8	FLANGE, WN, 150# RF STD WALL BORE ASTM A105			
	BFL	1/2 - 8	BLIND FLANGE, 150# RF ASTM A105			
	GAS	1/2 - 8	GASKET, 304SS SPIRAL WOUND GRAPHITE PER ASME B16.20, 1/8" THK W/INNER RING		94	
	BOL	1/2 - 8	STUD BOLTS A193 B7 W/ HVY HEX NUTS A194 2H		471	
			**** ORIFICE FLANGES ****			
	ORI	1 - 8	WN ORIFICE FLANGE SET 300#RF BORE TO MATCH PIPE ASTM A105 PER ASME B16.36			
			**** VALVES ****			
	CHE	1/2 - 2	CHECK 800# SW STL F6/STEL SPRING PISTON			
	CHEFLG	1/2 - 2	CHECK 150# RF STL/STEL SPRING LOAD PISTON			
	CHE	2 1/2 - 8	CHECK 150# BW STL, F6 STEL SWING TYPE			
	BALL	1/2 - 2	BALL VALVE 300# OR 600#, SW STL, LEVER OPERATED, GAS SERVICE, API-607 FIRE SAFE		473	
	BALFLG	1/2 - 2	BALL VALVE 300# OR 600#, RF STL, LEVER OPERATED, GAS SERVICE, API-607 FIRE SAFE		473	
	BALL	2 1/2 - 8	BALL VALVE 150#, BW STL, GEAR OPERATED, GAS SERVICE, API-607 FIRE SAFE		473	
	BALFLG	2 1/2 - 8	BALL VALVE 150#, RF STL, GEAR OPERATED, GAS SERVICE, API-607 FIRE SAFE		473	

DESIGN CONDITIONS

MATERIAL:	A106 GR B	MAX. PRESS. (PSI) @ MAX. TEMP.:	285 PSIG @ 100 DEG F	CONSTRUCTION:	
CORR. ALLOW.:	0.0625 IN	FLANGE RATING:	150# RF		2" & SMALLER - SOCKET WELD
CODE(S):	ASME B31.1	SERVICE:	LOW PRESSURE NO. 2 FUEL OIL		3" & LARGER - BUTTWELD OR FLANGED

SEWERAGE AND WATER BOARD OF NEW ORLEANS
WEST POWER COMPLEX

SWBNO - WEST POWER COMPLEX

PIPING DESIGN STANDARD HC01A

DOUBLE WALL CONTAINMENT, LOW PRESSURE NO. 2 FUEL OIL

APPROVED BY: LMR | REVISION: 0 | DATE: 45993

REV	SHORT DESCR	SIZES	LONG DESCRIPTION	LARGE END SIZE	NOTE NO.	REFERENCE
			**** GENERAL NOTES ****			
			(SEE NOTES 2, 206)			
			**** PIPE (CARRIER)****			
	PIP	1/2 2	PIPE, SCH 80 SMLS ASTM A106 GR B		761	
	PIP	2 1/2 - 10	PIPE, STD WALL SMLS ASTM A106 GR B			
			**** PIPE (CONTAINMENT)****			
	PIP	1/2 2	PIPE, SCH 80 SMLS ASTM A106 GR B		761	
	PIP	2 1/2 - 10	PIPE, STD WALL SMLS ASTM A106 GR B			
			**** PIPE NIPPLES ****			
	NIPTBE	1/2 - 2	NIPPLE SCH 80 SMLS ASTM A106 GR B TBE			
	NIPTOE	1/2 - 2	NIPPLE SCH 80 SMLS ASTM A106 GR B TOE			
	NIPPBE	1/2 - 2	NIPPLE SCH 80 SMLS ASTM A106 GR B PBE			
			**** FITTINGS ****			
	ELL	1/2 - 2	ELBOW, 90 DEG 3000# SW ASTM A105			
	45L	1/2 - 2	ELBOW, 45 DEG 3000# SW ASTM A105			
	TEE	1/2 - 2	TEE, 3000# SW ASTM A105			
	CPL	1/2 - 2	COUPLING, 3000# SW ASTM A105			
	CPL	1/2 - 2	REDUCING COUPLING, 3000# SW ASTM A105			
	CAP	1/2 - 2	CAP, 3000# SW ASTM A105			
	PLG	1/2 - 2	PLUG, ROUND HEAD SW ASTM A105			
	ELL	2 1/2 - 8	ELBOW, LR 90 DEG STD WALL ASTM A234 WPB			
	45L	2 1/2 - 8	ELBOW, 45 DEG STD WALL ASTM A234 WPB			
	TEE	2 1/2 - 8	TEE, STD WALL ASTM A234 WPB			
	CNCRED	2 1/2 - 8	REDUCER, CONC STD WALL A234 WPB			
	ECCRED	2 1/2 - 8	REDUCER, ECC STD WALL A234 WPB			
	CAP	2 1/2 - 8	CAP, STD WALL ASTM A234 WPB			
			**** OLETS ****			
	WOL	3 - 8	WELDOLET, STD WALL ASTM A105		320	
	SOL	1/2 - 2	SOCKOLET, 3000# ASTM A105		465	
			**** FLANGES, GASKETS & BOLTING ****			

SEWERAGE AND WATER BOARD OF NEW ORLEANS
WEST POWER COMPLEX

SWBNO - WEST POWER COMPLEX

PIPING DESIGN STANDARD HC01A

DOUBLE WALL CONTAINMENT, LOW PRESSURE NO. 2 FUEL OIL

APPROVED BY: LMR | REVISION: 0 | DATE: 45993

REV	SHORT DESCR	SIZES	LONG DESCRIPTION	LARGE END SIZE	NOTE NO.	REFERENCE
	FLGSW	1/2 - 2	FLANGE, 150# RF SW SCH 80 BORE ASTM A105			
	WNK	2 1/2 - 8	FLANGE, WN, 150# RF STD WALL BORE ASTM A105			
	BFL	1/2 - 8	BLIND FLANGE, 150# RF ASTM A105			
	GAS	1/2 - 8	GASKET, 304SS SPIRAL WOUND GRAPHITE PER ASME B16.20, 1/8" THK W/INNER RING		94	
	BOL	1/2 - 8	STUD BOLTS A193 B7 W/ HVY HEX NUTS A194 2H		471	

DESIGN CONDITIONS

MATERIAL:	A106 GR B	MAX. PRESS. (PSI) @ MAX. TEMP.:	285 PSIG @ 100 DEG F	CONSTRUCTION:	
CORR. ALLOW.:	0.0625 IN	FLANGE RATING:	150# RF		2" & SMALLER - SOCKET WELD
CODE(S):	ASME B31.1	SERVICE:	DOUBLE WALL CONTAINMENT, LOW PRESSURE NO. 2 FUEL OIL		3" & LARGER - BUTTWELD OR FLANGED

SEWERAGE AND WATER BOARD OF NEW ORLEANS
WEST POWER COMPLEX

Pipe Specification Notes:

The following requirements are applicable where specifically noted on the individual pipe specification tables.

1	THIS LINE CLASS IS BASED ON THE FULL RATING OF THE FLANGE MATERIAL WITHIN THE TEMPERATURE RANGE INDICATED.
2	PIPING COMPONENTS IN THIS LINE CLASS ARE SELECTED BASED ON THE DESIGN CONDITIONS LISTED ABOVE. THESE COMPONENTS SHOULD BE INVESTIGATED FOR THEIR SUITABILITY IN PIPING SYSTEMS WHERE THE DESIGN CONDITIONS EXCEED THE LIMITS OF THIS LINE CLASS.
3	DELETED
4	FOR VALVES 8" AND LARGE, ALTERNATE 2 1/4 CHROME VALVE BODY MATERIAL MAY BE USED WITH THE APPROPRIATE PRESS./TEMP. RATING AND TRANSITION PIECES. CONSULT MATERIAL ENGINEER FOR APPROVAL.
5	CARBON STEEL PIPING AND FITTINGS SHALL BE HOT DIP GALVANIZED.
6	WHERE UNIONS ARE USED THEY SHALL BE 300# MALLEABLE IRON EXCEPT FOR LINES UNDER VACUUM 3000# SOCKET WELD OR SCREWED AND BACK WELDED FORGED STEEL UNIONS SHALL BE USED
7	IN CERTAIN INSTANCES, FOR COLD WATER SERVICE WHERE PIPING ARRANGEMENT MAY PERMIT, 150# MALLEABLE IRON SCREWED FITTINGS PER ANSI B16.3 MAY BE USED IN LIEU OF SOCKET WELD OR SCREWED FORGED STEEL FITTINGS, SUCH SUBSTITUTION IS SUBJECT TO APPROVAL OF THE ENGINEERS.
8	THREADED JOINTS ARE NOT PERMITTED WITHOUT AUTHORIZATION.
11	ALL FLANGED JOINTS INCLUDING VALVE BONNET IN CAUSTIC OR ACID SERVICES SHALL BE FITTED WITH INDICATING SPRAY SHIELDS.
22	WELDS IN CARBON STEEL PIPING WITH WELD THICKNESS EXCEEDING 0.75" SHALL BE STRESS RELIEVED IN ACCORDANCE WITH PROJECT SPECIFICATIONS.
23	WELDS IN CHROME ALLOY PIPING WITH WELD THICKNESS EXCEEDING 0.500 INCH SHALL BE STRESS RELIEVED IN ACCORDANCE WITH THE REQUIREMENTS OF PROJECT SPECIFICATIONS AND B31.1.
24	CONTRACTOR TO SPECIFY BORE.
26	78" PIPE SHALL BE SUPPLIED WITH BELL AND SPIGOT ENDS SUITABLE FOR PIPE TO PIPE JOINTS. WELDED JOINT SHALL BE PER AWWA M11, FIG.8.1.A FOR OUTSIDE WELDS.
32	IN STEAM SERVICE, ALL GATE VALVES 4" AND LARGER SHALL HAVE A WARM UP GLOBE BY-PASS VALVE ATTACHED TO THE LINE AND SIZED IN ACCORDANCE WITH STANDARD MSS-SP-45.
51	ALL BELOW GROUND PIPING COMPONENTS SHALL BE EXTERNALLY PROTECTED IN ACCORDANCE WITH CONTRACT SPECIFICATIONS.
90	USE CLASS 300 PIPE FLANGES AND GASKETS AS REQUIRED TO MATCH CLASS 300 EQUIPMENT OR VESSEL NOZZLES OF THE SAME FLANGE FACING FINISH
91	USE WELD NECK FLANGES WITH BUTTERFLY VALVES.
92	USE WELD NECK FLANGES BELOW GROUND.
93	USE COMPRESSED FIBER GASKET WITH FLAT FACE FLANGES
94	USE SPIRAL WOUND GASKET WITH RAISED FACE FLANGES
100	DELETED
101	PIPE SHALL CONFORM TO AWWA C900.
102	USE FOR VENTS AND/OR DRAINS AND WHERE SCREWED OUTLET IS REQUIRED FOR INSTRUMENT CONNECTION.
105	BALL VALVES ARE LIMITED TO THE MANUFACTURER'S PUBLISHED PRESS./TEMP. RATING AND SHALL NOT EXCEED 400 DEG. F.
110	USE FLANGE VALVES AGAINST VESSEL OR EQUIPMENT NOZZLE OR WHERE FLANGE VALVE IS REQUIRED.
115	USE FLANGED VALVES AGAINST VESSEL OR EQUIPMENT NOZZLE OR WHERE FLANGED CONNECTION IS MANDATED.
118	USE FLAT FACE FLANGES AND FULL FACE GASKET AGAINST FLAT FACE OR CAST IRON VALVES AND EQUIPMENT NOZZLES.
120	BUSHINGS TO BE USED ONLY AFTER TAKE-OFF VALVES. DO NOT USE FOR ONE SIZE REDUCTIONS.
122	USE FOR VENT, DRAIN, SAMPLE AND PRESSURE CONNECTIONS. NORMALLY TO BE 1".
123	VENT & PRESSURE CONNECTIONS TO BE 1" FOR NORMAL CONDITIONS.
130	RUBBER OR NEOPRENE LINED VALVES WITH LINING EXTENDING OVER THE FLANGE FACING SHALL BE INSTALLED WITHOUT GASKET.
131	INSTALL BUTTERFLY VALVE BETWEEN WELDNECK FLANGES ONLY.
132	DO NOT INSTALL DUO-CHECK VALVES AGAINST BUTTERFLY VALVES.
133	BUTTERFLY VALVES TO BE USED IN WATER SERVICE ONLY
140	USE CAST IRON GATE VALES FOR BLOCK VALVES ON HYDRANTS. VALVE BOX IS REQUIRED.
143	CONSIDER USING TEFLON PASTE IN SERVICES WHERE DEBRIS FROM TEFLON TAPE MAY CAUSE PLUGGAGE DOWNSTREAM. EXAMPLES MIGHT BE INSTRUMENT AIR FITTINGS UPSTREAM OF CRITICAL INSTRUMENTS, OR FITTINGS UPSTREAM OF ANALYZERS.
150	VALVES SHALL BE PROVIDED WITH DRAIN BOSSES IN STEAM SERVICE.
202	SEAMLESS PIPE OF THE SAME MATERIAL AND GRADE MAYBE SUBSTITUTED FOR WELDED PIPE WITH PIPING MATERIAL ENGINEER APPROVAL.
206	UNINSULATED PIPE, FITTINGS AND FLANGES SHALL BE CLEANED AND PRIMED IN ACCORDANCE WITH PROJECT SPECIFICATIONS FOR PAINTING.
300	DELETED
302	USE FOR PLUGGED UNVALVED VENT AND DRAIN.

NOTES

SEWERAGE AND WATER BOARD OF NEW ORLEANS
WEST POWER COMPLEX

Pipe Specification Notes:

The following requirements are applicable where specifically noted on the individual pipe specification tables.

303	USE FOR JOINING PIPE AND SWAGES WITH PLAIN ENDS. AT CONSTRUCTION'S OPTION, 2" PIPE SIZE MAYBE SOCKETWELDED IN LIEU OF BUTTWELD.
305	USE SOCKETWELD PLUG WITH SOCKETWELD TEE ONLY WHEN ATTACHING TO A DUMMY SUPPORT @ CHANGE OF DIRECTION.
307	USE ONLY FOR HYDROSTATIC VENTS AND DRAINS CONNECTIONS. SEAL WELD THREADED PLUG AFTER COMPLETION OF HYDROSTATIC TESTING.
308	FOR DRAIN AND VENT LINES TO THE ATMOSPHERE, USE THREADED PIPING COMPONENTS DOWNSTREAM OF THE LAST BLOCK VALVES.
320	SIZE SHOWN IS BRANCH SIZE. WELDOLETS ARE SPECIFIED AS HEADER WEIGHT BY BRANCH WEIGHT.
325	DELETED
326	SHORT RADIUS ELBOWS SHALL NOT BE USED WITHOUT AUTHORIZATION FROM ENGINEER.
327	USE BENDS IN LIEU OF ELBOWS WHEREVER SPACE PERMITS.
330	USE SWAGES WHERE SMALL END IS 2" OR SMALLER AND LARGE END IS 6" OR SMALLER, USE REDUCERS FOR SMALL END LARGER THAN 2"
331	DELETED
332	USE LATROLETS FOR 45 DEGREE BRANCH CONNECTIONS WHERE INDICATED ON P&ID.
335	DELETED
336	PIPE RESTRAINT DEVICES ARE REQUIRED FOR ALL RESTRAINT DEVICES EXCEPT FLANGED CONNECTIONS
403	USE SLIP-ON FLANGES ONLY WITH PRIOR ENGINEERING APPROVAL, FOR REDUCING AND WHERE WELDING NECK FLANGES ARE IMPRACTICAL. SLIP-ON FLANGES ARE NOT PERMITTED ON VIBRATING SERVICE.
404	USE CARBON STEEL LAP JOINT FLANGES WITH STAINLESS STEEL STUB ENDS.
428	USE FOR BURIED BOLTING.
465	THERMOWELLS IN THIS SERVICE SHALL BE SOCKET-WELDED.
468	DELETED
469	USE WITH TAPPED LUG TYPE BUTTERFLY VALVES.
470	USE STUD BOLTS FOR BOLTING BETWEEN CARBON STEEL FLANGES OR AGAINST STEEL EQUIPMENT OR PUMP NOZZLES. USE MACHINE BOLTS FOR BOLTING CAST IRON FLANGES OR EQUIPMENT NOZZLES.
471	BURIED BOLTING SHALL BE CADMIUM PLATED IN ACCORDANCE WITH ASTM A165 OR ZINC PLATED IN ACCORDANCE WITH ASTM A153.
472	BLIND FLANGE INSTALLATION REQUIRES LONGER MACHINE BOLT LENGTH.
473	INCLUDE HIGH PRESSURE FITTINGS FOR LUBRICATION TO AID IN SEALING. (**NOTE: VALVES INSTALLED IN PIPING SUPPLYING FUEL GAS TO COMBUSTION TURBINE-GENERATOR SHALL BE NON-LUBRICATED TO PREVENT CONTAMINATION OF FUEL PIPING)**
474	BUTTERFLY VALVE SPEC FOR COOLING TOWER WATER AND CHILLED WATER SERVICE ONLY.
475	NON-SLAM CHECK VALVES TO BE USED FOR PUMP DISCHARGES WHERE INDICATED IN COOLING WATER, CHILLED WATER, AND HEATING HOT WATER SERVICE.
476	THREADED PIPING SHALL BE THREADED ON-SITE OR AT CONTRACTOR'S SHOP, AND ENDS PROPERLY COATED FOR CORROSION PREVENTION. PRE-THREADED PIPING IS NOT ACCEPTABLE.
701	USE JACKSCREWS ONLY WHERE PIPING CAN NOT BE OPENED WITH FLANGE SPREADERS.
710	TUBING BENDS SHALL BE 5 DIAMETERS MINIMUM.
760	OPERATING LINE BLANKS SHALL BE IN ACCORDANCE WITH ASME/ANSI B16.5 AND API STD 590.
761	MINIMUM PIPE SIZE SHALL BE 3/4" EXCEPT FOR INSTRUMENTATION LINES. INSTRUMENT CONNECTIONS ON PROCESS PIPE SHALL STILL BE 3/4" MINIMUM, THEN BUSHED DOWN TO ROOT VALVE SIZE.
DP1	USE MANUFACTURER'S DERATING CURVE TO DETERMINE ACTUAL RATING AT TEMPERATURE ABOVE THE BASELINE TEMPERATURE.
DP5	USE DUCTILE IRON EXTENSION PIECE TO CONNECT UNDERGROUND AND ABOVEGROUND PIPING.
GP1	USE GASKET ONLY WHEN MATING TO A METAL FLANGE SURFACE.
NR1	DELETED
762	FLANGE INSULATING KITS TO BE USED AT INTERFACE OF ABOVEGROUND AND UNDERGROUND PIPING.
763	CONTAINMENT PIPE SHALL BE DESIGNED TO ALLOW CONTINUOUS DRAINAGE INT EH ANNULAR SPACE TO THE DRAIN POINTS. DRAIN FITTINGS SHALL BE DESIGNED TO ALLOW A VALVE ATTACHMENT TO BE MADE SO THAT THE SECONDARY CONTAINMENT COMPARTMENT MAY BE READILY DRAINED AND MANUALLY CHECKED FOR LEAKS.
764	CONTAINMENT PIPE DESIGN PRESSURE AND TEMPERATURE TO MATCH CARRIER PIPE.
765	CONTAINMENT PIPE SHALL BE DESIGNED TO ALLOW FOR MAXIMUM PIPING DIFFERENTIAL EXPANSION/CONTRACTION OF CARRIER/CONTAINMENT PIPES.
766	SYSTEM CONSISTS OF A CARRIER PIPE, A CONTAINMENT PIPE COATED WITH URETHANE OR A FIBERGLASS REINFORCED POLYMER (FRP) OUTER JACKET, AND A CABLE LEAK DETECTION SYSTEM.

SEWERAGE AND WATER BOARD OF NEW ORLEANS
WEST POWER COMPLEX

Pipe Specification Notes:

The following requirements are applicable where specifically noted on the individual pipe specification tables.

767 HYDROTEST INTERSTITIAL SPACE BETWEEN THE CARRIER AND CONTAINMENT PIPES. INTEGRITY REQUIRED ON BOTH INTERNAL AND EXTERNAL PRESSURE TESTS. INTERSTITIAL SPACE TO BE DRIVED WITH AIR FOLLOWING HYDROTEST.

SEWERAGE AND WATER BOARD OF NEW ORLEANS
WEST POWER COMPLEX

STDS: ASME B16.20 NONMETALLIC FLAT GASKETS FOR PIPE FLANGES
ASME B16.21 METALLIC GASKETS FOR PIPE FLANGES

SCOPE: Specifiy the following gaskets for the following service conditions.

SERVICE	ANSI CLASS	GASKET
DEMINERALIZED WATER	ALL	GASKET, 304SS SPIRAL WOUND GRAPHITE W/INNER RING PER ASME B16.20
PLANT / INSTRUMENT AIR	ALL	GASKET, FLAT PER ASME B16.21, 1/8" THK
NATURAL GAS	ALL	GASKET, 304SS SPIRAL WOUND GRAPHITE W/INNER RING PER ASME B16.20
FIREWATER	ALL	GASKET, FLAT PER ASME B16.21, 1/8" THK

RESEARCH OTHER CHEMICALS BEFORE SPECIFYING GASKETS.

SECTION 40 50 20
ABOVEGROUND POWER PLANT PIPING SUPPLEMENT 2

SEWERAGE AND WATER BOARD OF NEW ORLEANS
WEST POWER COMPLEX

STDS: ASTM A193 - Standard Specification for Alloy-Steel and Stainless Steel Bolting for High Temperature or High Pressure Service and Other Special Purpose Applications
ASTM A194 - Standard Specification for Carbon and Alloy Steel Nuts for Bolts for High Pressure or High Temperature Service, or Both

SCOPE: SPECIFY FLANGE BOLTING PER THE FOLLOWING CONDITIONS.

SERVICE	ANSI CLASS	BOLT
ABOVEGROUND STEEL PIPING	=> 150#	STUD BOLTS A193 B7 W/ HVY HEX NUTS A194 2H
UNGERGROUND SERVICE	ALL	STUD BOLTS A193 B7 W/ HVY HEX NUTS A194 2H CAD. PLATED
LOW PRESSURE ABOVE GROUND PIPING	<= 150#	STUD BOLTS A193 B7 W/ HVY HEX NUTS A194 2H

SECTION 40 50 20
ABOVE GROUND POWER PLANT PIPING SUPPLEMENT 1

CLIENT: SWBNO
LOCATION: New Orleans, LA
UNIT: Combustion Turbine Generator 7

LINE LIST

Revision	3
Date	12/3/2025
By	LMR, LEK

Row	Area	Unit	Serv	Size	LineNo.	Pipe Spec	Insul Type	Pipeline Number	P&IDs From	P&IDs To	From	To	Operating Pressure, psig	Operating Temp, °F	Design Flow		Design Pressure, psig	Design Temp, °F	Pressure Test (Hydro, Pneumatic)	Test Pressure, psig	Comments
1	WPCAUX	0	FO	3	0004	HC01	N	WPCAUX-0-FO-3-0004-HC01-N	P550	---	Bidirection Header/FO Return Pumps	WPC FO Day Tank	48	AMB	110	gpm	100	100	H	150	
2	WPCAUX	0	FO	3	0005	HC01	N	WPCAUX-0-FO-3-0005-HC01-N	P550	---	FO Header from Main Tanks	WPC FO Day Tank	48	AMB	110	gpm	100	100	H	150	Bidirectional Line to/from Main Fuel Tanks
3	WPCAUX	0	FO	3	0016	HC01	N	WPCAUX-0-FO-3-0016-HC01-N	P550	---	FO Day Tank	Fuel Oil Return Pumps Skid	48	AMB	110	gpm	100	100	H	150	
4	WPCAUX	0	FO	3	0029	HC01	N	WPCAUX-0-FO-3-0029-HC01-N	P550	---	Fuel Oil Return Pump P04 Discharge	Fuel Oil Main Tank	48	AMB	110	gpm	100	100	H	150	
5	WPCAUX	0	FO	3	0030	HC01	N	WPCAUX-0-FO-3-0030-HC01-N	P550	---	Fuel Oil Return Pump P03 Discharge	Fuel Oil Main Tank	48	AMB	110	gpm	100	100	H	150	
6	WPCAUX	0	FO	3	0031	HC01	N	WPCAUX-0-FO-3-0031-HC01-N	P550	---	Fuel Oil Day Tank	Fuel Oil Return Pump P04 Suction	48	AMB	110	gpm	100	100	H	150	
7	WPCAUX	0	FO	3	0032	HC01	N	WPCAUX-0-FO-3-0032-HC01-N	P550	---	Fuel Oil Day Tank	Fuel Oil Return Pump P03 Suction	48	AMB	110	gpm	100	100	H	150	
8	WPCAUX	0	FO	3	0038	HC01	N	WPCAUX-0-FO-3-0038-HC01-N	P550	---	Fuel Oil Return Pump Skid PRV	Fuel Oil Return Pump Skid Suction	48	AMB	--		100	100	H	150	
9	CWPYRD	00	FO	3	001	HC01	N	00-FO-3-001-HC01-N	M3-2	---	00-FO-3-010-HC01-N	Fuel Oil Forwarding Pump 00-FO-PMP-001A	48	AMB	106	gpm	100	100	H	150	
10	CWPYRD	00	FO	3	002	HC01	N	00-FO-3-002-HC01-N	M3-2	---	00-FO-3-010-HC01-N	Fuel Oil Forwarding Pump 00-FO-PMP-001B	48	AMB	106	gpm	100	100	H	150	
11	CWPYRD	00	FO	3	003	HC01	N	00-FO-3-003-HC01-N	M3-2	---	Fuel Oil Forwarding Pump 00-FO-PMP-001A	00-FO-3-005-HC01-N	48	AMB	106	gpm	100	100	H	150	
12	CWPYRD	00	FO	3	004	HC01	N	00-FO-3-004-HC01-N	M3-2	---	Fuel Oil Forwarding Pump 00-FO-PMP-001B	00-FO-3-005-HC01-N	48	AMB	106	gpm	100	100	H	150	
13	CWPYRD	00	FO	3	005	HC01	N	00-FO-3-005-HC01-N	M3-2	---	00-FO-3-003/004-HC01-N	00-FO-3-009-HC01-N	48	AMB	106	gpm	100	100	H	150	
14	CWPYRD	00	FO	3	006	HC01	N	00-FO-3-006-HC01-N	M3-2	---	00-FO-3-009-HC01-N	00-FO-3-013-YHD-N	48	AMB	110	gpm	100	100	H	150	Bidirectional Line between Emergency Fuel Tanks and WPC Fuel Oil Day Tank
15	CWPYRD	00	FO	3	008	HC01	N	00-FO-3-008-HC01-N	M3-2	---	00-FO-3-009-HC01-N	Emergency Fuel Tank 1/2 Inlet	48	AMB	110	gpm	100	100	H	150	
16	CWPYRD	00	FO	3	009	HC01	N	00-FO-3-009-HC01-N	M3-2	---	Fuel Oil Forwarding Pump Skid/ 00-FO-3-005-HC01-N	00-FO-3-006-HC01-N	48	AMB	110	gpm	100	100	H	150	Bidirectional Line between Emergency Fuel Tanks and WPC Fuel Oil Day Tank
17	CWPYRD	00	FO	3	010	HC01	N	00-FO-3-010-HC01-N	M3-2	---	Emergency Fuel Tank 1/2 Suction	Fuel Oil Forwarding Pump Skid/ 00-FO-3-001/002-HC01-N	48	AMB	106	gpm	100	100	H	150	
16	CWPYRD	00	FO	3	011	HC01	N	00-FO-3-011-HC01-N	M3-2	---	FO Pump PSV	FO Pump Suction	48	AMB	106	gpm	100	100	H	150	
17	CWPYRD	00	FO	3	012	HC01	N	00-FO-3-012-HC01-N	M3-2	---	FO Pump PSV	FO Pump Suction	48	AMB	106	gpm	100	100	H	150	
20	CWPYRD	00	FO	3	013	YHD	N	00-FO-3-013-YHD-N	M3-2	---	00-FO-3-006-HC01-N	00-FO-3-014-YHD-N	48	AMB	110	gpm	100	100	H	150	Bidirectional Line between Emergency Fuel Tanks and WPC Fuel Oil Day Tank
21	CWPYRD	00	FO	3	014	YDH	N	00-FO-3-014-YHD-N	M3-2	---	00-FO-3-013-YHD-N	00-FO-3-007-YHD-N	48	AMB	110	gpm	100	100	H	150	Bidirectional Line between Emergency Fuel Tanks and WPC Fuel Oil Day Tank. 00-FO-3-007-YHD-N installed in CN 1415

NOTES:

1. General Note: Refer to Specifications for NDE and Testing requirements.
2. General Note: Refer to Specifications for painting / coating requirements.

SECTION 40 55 00
POWER PLANT VALVES

PART 1 GENERAL

1.01 SUMMARY

A. This Specification defines the requirements for the design, fabrication, testing, delivery, and performance of manual and motor operated valves and supplements the Purchase Order.

B. Standard valves consist of ball, butterfly, gate, globe, check and plug valves of cast iron, bronze, carbon steel, stainless steel, alloy steel, or plastic.

1.02 REFERENCES

A. The following is a list of standards that may be referenced in this section.

1. American National Standards Institute (ANSI): C540, Standard for Power Actuating Devices for Valves and Sluice Gates.
2. American Petroleum Institute (API):
   a. 594, Check Valves: Wafer, Wafer-Lug, and Double Flanged Type.
   b. 598, Valve Inspection and Testing.
   c. 599, Metal Plug Valves - Flanged and Welding Ends.
   d. 602, Compact Steel Gate Valves - Flanged, Threaded, Welding, and Extended-Body Ends.
   e. 607, Fire Test for Soft-Seated Quarter-Turn Valves.
   f. 609, Butterfly Valves; Double-Flanged, Lug- and Wafer-Type.
3. American Society of Mechanical Engineers (ASME):
   a. B1.1, Unified Inch Screw Threads.
   b. B1.20.1, Pipe Threads General Purpose.
   c. B16.1, Cast Iron Pipe Flanges and Flanged Fittings Classes 25, 125, and 250.
   d. B16.5, Pipe Flanges and Flanged Fittings.
   e. B16.10, Face-to-Face and End-to-End Dimensions of Valves.
   f. B16.11, Forged Fittings, Socket-Welding and Threaded.
   g. B16.18, Cast Copper Alloy Solder Joint Pressure Fittings.
   h. B16.24, Cast Copper Alloy Pipe Flanges and Flanged Fittings.
   i. B16.25, Buttwelding Ends.
   j. B16.34, Valves, Flanged, Threaded, and End.
   k. B16.42, Ductile Iron Pipe Flanges and Flanged Fittings.
   l. B31.1, Power Piping.
   m. BPVC Section I, Rules for Construction of Power Boilers.
   n. SA-105/SA-105M, Standard Specification for Carbon Steel Forgings for Piping Applications.

o. SA-182/SA-182M, Standard Specification for Forged or Rolled Alloy-Steel Pipe Flanges, Forged Fittings, and Valves and Parts for High-Temperature Service.
p. SA-193/SA-193M, Standard Specification for Alloy-Steel and Stainless Steel Bolting Materials for High-Temperature Service.
q. SA-194/SA-194M, Specification for Carbon and Alloy Steel Nuts for Bolts for High Pressure or High Temperature Service, or Both.
r. SA-216/SA-216M, Standard Specification for Steel Castings, Carbon, Suitable for Fusion Welding, for High-Temperature Service.
s. SA-276, Standard Specification for Stainless Steel Bars and Shapes.
t. SA-307, Standard Specification for Carbon Steel Bolts and Studs, 60,000 psi Tensile Strength.
u. SA-395/SA-395M, Standard Specification for Ferritic Ductile Iron Pressure-Retaining Castings for Use at Elevated Temperatures.
v. SA-479/SA-479M, Standard Specification for Stainless Steel Bars and Shapes for Use in Boilers and Other Pressure Vessels.
w. SA-703/SA-703M, Standard Specification for Steel Castings, General Requirements, for Pressure-Containing Parts.
x. SA-961/SA-961M, Standard Specification for Common Requirements for Steel Flanges, Forged Fittings, Valves, and Parts for Piping Applications.
y. SA-985/SA-985M, Standard Specification for Steel Investment Castings, General Requirements, for Pressure-Containing Parts.

4. ASTM International (ASTM):
   a. A105/A105M, Standard Specification for Carbon Steel Forgings for Piping Applications.
   b. A126, Standard Specification for Gray Iron Castings for Valves, Flanges, and Pipe Fittings.
   c. A182/A182M, Standard Specification for Forged or Rolled Alloy-Steel Pipe Flanges, Forged Fittings, and Valves and Parts for High-Temperature Service.
   d. A193/A193M, Standard Specification for Alloy-Steel and Stainless Steel Bolting Materials for High-Temperature Service.
   e. A194/A194M, Specification for Carbon and Alloy Steel Nuts for Bolts for High Pressure or High Temperature Service, or Both.
   f. A216/A216M, Standard Specification for Steel Castings, Carbon, Suitable for Fusion Welding, for High-Temperature Service.
   g. A276, Standard Specification for Stainless Steel Bars and Shapes.
   h. A307, Standard Specification for Carbon Steel Bolts and Studs, 60,000 psi Tensile Strength.
   i. A395/A395M, Standard Specification for Ferritic Ductile Iron Pressure-Retaining Castings for Use at Elevated Temperatures.
   j. A479/A479M, Standard Specification for Stainless Steel Bars and Shapes for Use in Boilers and Other Pressure Vessels.

k. A703/A703M, Standard Specification for Steel Castings, General Requirements, for Pressure-Containing Parts.
l. A961/A961M, Standard Specification for Common Requirements for Steel Flanges, Forged Fittings, Valves, and Parts for Piping Applications.
m. A985/A985M, Standard Specification for Steel Investment Castings, General Requirements, for Pressure-Containing Parts.
n. B61, Standard Specification for Steam or Valve Bronze Castings.
o. B62, Standard Specification for Composition Bronze or Ounce Metal Castings.
p. B117, Salt Spray Test.
q. B164, Specification for Nickel-Copper Alloy Rod, Bar, and Wire.
r. B283, Specification for Copper and Copper-Alloy Die Forgings (Hot-Pressed).

5. American Water Works Association (AWWA):
   a. C207, Steel Pipe Flanges for Waterworks Service, Sizes 4 Inches Through 144 Inches.
   b. C500, Metal-Seated Gate Valves for Water Supply Service.
   c. C508, Swing-Check Valves for Waterworks Service, 2 Inches through 24 Inches.
   d. C509, Resilient-Seated Gate Valves for Water Supply Service.
6. Factory Mutual (FM).
7. Manufacturers Standardization Society of the Valve and Fittings Industry, Inc. (MSS):
   a. SP-25 Standard Marking System for Valves, Fittings, Flanges, and Unions.
   b. SP-45, Bypass and Drain Connections.
   c. SP-55, Quality Standard for Steel Castings for Valves, Flanges, Fittings, and Other Piping Components.
   d. SP-61, Pressure Testing of Steel Valves.
   e. SP-67, Butterfly Valves.
   f. SP-68, High Pressure - Offset Seat Butterfly Valves.
   g. SP-70, Cast Iron Gate Valves, Flanged and Threaded Ends.
   h. SP-71, Cast Iron Swing Check Valves, Flanged and Threaded Ends.
   i. SP-72, Ball Valves with Flanged or Butt-Welding Ends for General Service.
   j. SP-78, Cast Iron Plug Valves, Flanged and Threaded Ends.
   k. SP-80, Bronze Gate, Globe, Angle and Check Valves.
   l. SP-85, Cast Iron Globe and Angle Valves, Flanged and Threaded Ends.
   m. SP-91, Guidelines for Manual Operation of Valves.
   n. SP-102, Multi-turn Valve Actuator Attachment – Flange and Driving Component Dimensions and Performance Characteristics.
   o. SP-105, Instrument Valves for Code Applications.
8. UL.

1.03 REFERENCE SPECIFICATIONS

A. The following documents are included for reference and form an integral part of this Specification.

1. Section 01 33 00, Submittal Procedures.
2. Section 01 61 00, Common Product Requirements.
3. Section 40 50 20, Aboveground Power Plant Piping

1.04 SUBMITTALS

A. In accordance with Section 01 33 00, Submittal Procedures.

B. Informational Submittals:

1. Shop Drawings: Provide for each type and size of valve:
   a. Complete descriptive literature, including operating and design pressures/temperatures, dimensions, maintenance pull space requirements, any limitations on valve mounting position, weights and center of gravity, bevel detail of butt weld end connection, materials of construction, recommendations for field welding, packing torque requirements, and post weld heat treatment of valves, and options.
   b. Recommended spare parts if disassembly for post weld heat treatment is required for installation, with unit prices.
   c. Recommended spare parts for 1 year's operation with unit prices.
      1) Recommended spare parts if disassembly for post weld heat treatment is required for installation.
      2) Recommended spare parts for construction, commissioning and startup.
   d. For motor operated valves (in addition):
      1) Principal dimensions, incoming power, general construction, and outline of the actuator mechanism.
      2) Operating Characteristics:
         a) Output torque or thrust.
         b) Voltage and frequency.
         c) Number of phases.
         d) Nominal power at running torque.
         e) Nominal power at locked rotor.
         f) Current at running torque.
         g) Current at locked rotor.
         h) Speed or travel time.
      3) Actuator options being supplied.
      4) Electrical wiring diagrams with list of symbols.
2. Inspection and Test Plan (ITP).
3. Operation and Maintenance Manuals.

4. Certified Material Test Report (CMTR):
    a. For carbon steel valves Class 300 and higher.
    b. Furnish for both body and bonnet material.
    c. Signed by manager of valve manufacturer's quality control department and shall show the name of supplier, name of prime material manufacturer and plant location, purchase order number, actual test results of chemical analysis and mechanical properties in accordance with the material specification, and Owner's project number.
5. Certificate of Compliance (COC):
    a. Required for valves not covered by CMTR.
    b. Furnish for both body and bonnet material.
    c. Certify that valve is new and complies with requirements of this Specification.
    d. Certifies manufacturing standard that applies to valve.
    e. Signed by manager of valve manufacturer's quality control department and shall show the name of supplier, name of prime material manufacturer and plant location, purchase order number, actual test results of chemical analysis and mechanical properties in accordance with the material specification, and Owner's project number.
6. Certified Test Report: Furnish for valves in Class 300 and higher.
7. Erection and installation instructions, including specific welding procedures.
8. Hydrotest Certification.
9. Inspection records.
10. Repair records complete with inspection and welding procedures and qualifications.
11. Motor Operated Valve (in addition):
    a. Manufacturer's test reports for the following:
        1) Voltage, phase, and frequency.
        2) Stroke time (seconds).
        3) Seating (or maximum dynamic) torque.
        4) Seating load amps.
        5) Torque-switch and limit-switch function.
    b. AC motor data sheet.
    c. Wiring diagram and field connections.
    d. Electrical requirements – volts, phase, amps, kW.
    e. Utility requirements (air, water, steam and other utilities).
12. Performance curves (include Cv).
13. Bill of materials (with Supplier and part numbers).

1.05 MARKING AND IDENTIFICATION

A. Equipment numbering shall be as generally defined in Section 01 58 53, Project Equipment Identification with equipment unique identification requirements defined herein.

1.06 DELIVERY, STORAGE, AND HANDLING

A. In accordance with Division 01, General Requirements.

B. Shipping:

1. When items are shipped in containers, identify each container with at least manufacturer's name, material description, size, purchase order number, valve data sheet/commodity code and applicable valve tag number.
2. The ends of all valves shall be sealed to prevent entry of foreign materials.
3. Protect flange faces and butt weld ends with wood, wood fiber, or plastic covers.
4. Close female threaded and socket weld openings with plastic or metal plugs.
5. All entrances to internal wiring shall be protected to prevent entrance of moisture, dust, dirt, and other deleterious material.
6. Drain unit of liquid prior to shipment.
7. Unit shall be disassembled only to such extent as may be necessary to facilitate field handling and to prevent damage during shipment.
8. Loose components shall be strung on wire and securely attached to valve or be furnished in a box.
9. Ship metal seated valves in closed position.
10. Ship resilient seated valves in open position.
11. Metal seated swing check valves shall be blocked closed and furnished with instructions (attached to valve) to remove blocking before installation.
12. Valves for chlorine service shall be individually packaged with desiccant in clear polyethylene bags or Owner approved substitute.

C. Identify shipping boxes by Purchase Order number, Owner's name, Owner's name, Project name, Project location, equipment number, and description of contents. Use ink, paint, or other indelible material markings. Securely affix a copy of the completed packing list to each separate shipping package.

D. Storage: Protect valves to withstand at least 6 months of unsheltered storage at jobsite before installation.

1.07 QUALITY ASSURANCE

A. A quality assurance program is required, summarized in a quality assurance manual and supported by written procedures for controlling activities affecting quality, such as welding, heat treatment and nondestructive examination.

B. Manufacturing/assembly facilities shall be accessible for inspection, audit and/or witness of work, inspections and tests.

C. The equipment furnished shall be guaranteed to conform to the requirements set forth and to the specified Codes, Standards and Regulations, and that all specified tests have been satisfactorily completed.

1.08 WARRANTY AND GUARANTEES

A. Furnish Manufacturer's extended guarantee or warranty with Owner named as beneficiary in writing as special guarantee.

B. The Manufacturer shall warrant that the equipment shall be supplied in accordance with these Specifications and shall perform as described herein.

C. The Manufacturer shall warrant that the equipment provided shall be free from defects in materials and workmanship for a period of 12 months after acceptance by Owner.

D. The Manufacturer shall repair or provide a replacement for any defective component under the warranty provided that any such defect was not the result of misuse of the equipment by the Owner or the Owner's representative. The Manufacturer shall be able to provide Owner with training and support service during the first year of operation.

PART 2 PRODUCTS

2.01 SITE CONDITIONS

A. The site location and conditions for the equipment specified herein are provided in Division 01, General Requirements.

2.02 COMPONENTS

A. Valves:

1. General:
   a. Valves and accessories shall conform to the requirements in the applicable Pipe Specification, Attachment 1 to Section 40 50 20, Aboveground Power Plant Piping, and requirements of this Specification.

b. Valve List specifies quantity, size, type of valve, and accessories.
c. Pipe Specifications specify pressure rating, end connection, and materials for each type of valve.
d. Valves shall be new and shall not contain asbestos materials (e.g., bonnet gaskets, stem packing).
e. Butt Weld Ends:
    1) Beveled in accordance with ASME B16.25.
    2) Bored to match pipe schedule specified on Pipe Specification.
    3) Schedule bore ends for carbon steel shall be beveled in accordance with ASME B16.25 Fig. 2(a).
    4) Backing rings are prohibited.

2. Valve Accessories: Accessories shall be manufacturer's standard, unless otherwise specified herein, and shall consist of but not be limited to, the following:
    a. Chain Wheels and Chain:
        1) High quality malleable iron designed so chain has positive grip on wheel at all times.
        2) Complete unit shall be suitable for specified operating conditions.
        3) Chain wheel operated valves, without gear operators, shall be furnished complete with impact wheel type operator.
        4) Complete with chain guides and nonrusting chain.
        5) Chain shall be forged link construction. Chain lengths, when specified, are given in feet in continuous chain.
    b. Drain Connections: Size for each valve in accordance with MSS-SP-45 and shall be plugged.
    c. Bypasses:
        1) Size in accordance with Series A of MSS-SP-45.
        2) Include bypass valve and pipe.
3. Valve Operators:
    a. General:
        1) Shall provide external indication of disc position and open counterclockwise.
        2) Input force shall be in accordance with MSS SP-91 and at no time shall the required rim force exceed 160 pounds. Each operator shall transmit the torque required to seat or unseat the valve against the maximum differential pressure. The maximum differential pressure shall be the design pressure on the Line List.
    b. Gear Operators:
        1) Gear operators shall be manufacturer's standard design and materials for type of valve specified herein.
        2) Orientation shall be determined by Owner after receipt of Contractor's drawings.
        3) Worm gear type for quarter turn valves.

4) Totally enclosed grease packed and sealed gear case.
5) Self-locking type to a hold a position with a locking stem thread on the valve.
6) Provide with handwheel and provision for air wrench operation.

c. Worm Gear Operators: Shall be heavy duty weatherproof industrial type with high strength cast iron or steel housing, hardened steel gears, valve position indicator and travel stops.
d. Bevel Gear Operators: Shall be totally enclosed type with hardened gears and sealed bearings, pinion drive shaft keyed to handwheel, air wrench drive attachment, metal can type stem protector (if not already protected by actuator, pipe nipples and caps, or indicator), and stainless steel indicator.
e. Manual Operation:
1) Multi-turn valves shall have provision for operation with portable air wrenches.
2) Orientation of the handwheel axis of the manual operator shall be such as to permit easy and safe access for operation.
3) Direction of rotation to close the valve shall be clearly marked on the face of each handwheel.
4) Mechanical position indicator shall be integrally mounted on each manual gear operator.

4. Adjustable Limit Switches:
a. NAMCO snap action switches for manually operated valves.
b. Enclosure:
1) Clean Dry Locations: NEMA 12.
2) Normally Wet or Damp Locations: NEMA 4X.
3) Outdoor Locations: NEMA 4X.
4) Corrosive Environment; NEMA 4X.
c. Devices that interface with Owner's equipment shall have the following minimum contact ratings:
1) ac: NEMA A300 rated, Form C contacts suitable for 300V ac, 10 amperes continuous, 60 amperes make, 6 amperes break at 120V ac. These ratings are based on inductive loads.
2) dc: NEMA P300 rated, Form C contacts suitable for 125V dc, 5 amperes continuous, 1.1 amperes make or break at 125V dc.

5. Locking Devices:
a. Allows valve to be locked open or closed with standard padlock.
b. Permanent and integral part of handwheel and yoke or lever.
6. Extension Stems: Complete with required couplings, universal joints, supporting brackets, and extra strong pipe stems.
7. Floor Stands and Indicators: Manufacturer's standard.

B. Factory Finish:

1. Surface Preparation:
   a. Shall be painted in accordance with manufacturer's standard practice.
   b. Nameplates, identification tags, machined mating surfaces, and stainless steel material shall not be painted.
   c. Stem of rising stem valves and exposed threads shall be coated with antiseize lubricant.

2.03 SPECIAL TOOLS

A. If required, manufacturer shall quote and provide one complete set of special tools required for installation and adjustment of the valves and operators.

2.04 SOURCE QUALITY CONTROL

A. Valves and appurtenances shall be products of well-established firms who are fully experienced, minimum five years, reputable and qualified in the manufacture of the particular equipment to be furnished.

B. Where practical, valves of the same type shall be identical, and the product of one Manufacturer, varying only with size. Exception to this requirement may be taken when the Manufacturer's standard product line does not include all necessary sizes.

C. Tests:

1. Manufacturer shall perform nondestructive examination (NDE) of all buttweld ends. The type of NDE performed shall be in accordance with the buttweld requirements of Table 136.4 of ASME B31.1. All NDE procedures and acceptance criteria shall in be accordance with ASME B16.34.
2. Each metallic valve shall have both its shell and seat pressure tested in accordance with applicable manufacturing standard.
3. Hydrostatic seat test for gear operated valves shall be performed on completely assembled valve with seat closed by applicable manual gear or motor operator.
4. Valves manufactured in accordance with API Standards shall be seat tested with high-pressure closure test per API 598.
5. Valves pressure rated in accordance with ASME B16.34 shall meet seat leakage requirements of MSS SP-61.
6. Hydrostatic seat closure test is required for carbon steel and stainless steel valves.
7. If bypass is required to be furnished, then bypass shall be welded to main valve and hydrostatically tested to prove that piping and bypass valve shall withstand pressure not less than 150 percent of main valve's 100 degrees F pressure rating.

8. Each completed electric motor operated valve assembly shall be cycled from full open to full closed and back to full open for verification of limit and torque switch function and setting, and ability of motor operator to open and close valve after seat leakage test has been performed.

D. Inspection: Owner shall have right to inspect at any stage of fabrication equipment, materials, and associated QA/QC documentation covered by this Specification including Suborder(s). Contractor shall include this notation on any Suborder(s).

E. Repair and Restoration:

1. Repair defects in body of cast or forged carbon, alloy, and stainless steel valves by applicable manufacturing standard.
2. Retest repaired valves.
3. Repair of body defects in cast iron, bronze, and nonmetallic valves is not permitted.
4. Owner reserves right to reject any valve with weld repairs.

F. Inspection and Test Plan (ITP): Manufacturer shall provide an Inspection and Test Plan (ITP) that identifies the inspections and tests to be performed during manufacture. Based on this ITP the Owner or his representatives may elect to witness shop testing. Notify Owner 3 weeks (or as otherwise specified) prior to testing.

PART 3 EXECUTION

3.01 INSTALLATION

A. General:

1. All valves shall be installed in strict accordance with Manufacturer's instructions.
2. If handwheel orientation is not shown on the Drawings, valve stems shall be in vertical position.
3. Assemble valve operator to valve such that the manual hand-wheel and electrical indicators and pushbuttons are accessible.

B. Butterfly Valves:

1. Separate mating flanges for resilient seat butterfly valves sufficiently so valves do not have to be wedged or forced into position.
2. Set discs in open position prior to tightening mating flange bolting.
3. Operate valve through entire open/ close cycle after tightening of bolts. Verify that disc or seat has not been jammed or damaged.

C. Check Valves:

1. Tag to indicate whether internals have been removed, jacked open, or left unaltered.
2. Bag internal parts that have been removed, tag with valve number, and securely attach bag to appropriate valve.

D. Lubricated Plug Valves: Lubricate with sealant appropriate for service.

END OF SECTION

VALVE LIST

Row	Valve #	Valve Size	Area	Unit	Serv	Size	LineNo.	Pipe Spec	Insul Type	Insul Thickness	Pipeline Number	P&IDs From	P&IDs To	From	To	Valve Type	Comments
1	**008**	3	WPCAUX	0	FO	3	0004	HC01	N		WPCAUX-0-FO-3-0004-HC01-N	P550	---	FO Return Pumps	UG Fuel Oil Header (CP-1415)	**BALFLG**	
2	**088**	3	WPCAUX	0	FO	3	0004	HC01	N		WPCAUX-0-FO-3-0004-HC01-N	P550	---	FO Return Pumps	UG Fuel Oil Header (CP-1415)	**BALFLG**	
3	**089**	1	WPCAUX	0	FO	3	0004	HC01	N		WPCAUX-0-FO-3-0004-HC01-N	P550	---	FO Return Pumps	UG Fuel Oil Header (CP-1415)	**BALL**	
4	**010**	3	WPCAUX	0	FO	3	0004	HC01	N		WPCAUX-0-FO-3-0004-HC01-N	P550	---	FO Return Pumps	UG Fuel Oil Header (CP-1415)	**BALFLG**	See WPCAUX-0-FO-FV-037A Specsheet
5	**006**	3	WPCAUX	0	FO	3	0005	HC01	N		WPCAUX-0-FO-3-0005-HC01-N	P550	---	FO Header from Main Tanks	FO Day Tank	**BALFLG**	
6	**007**	3	WPCAUX	0	FO	3	0005	HC01	N		WPCAUX-0-FO-3-0005-HC01-N	P550	---	FO Header from Main Tanks	FO Day Tank	**BALFLG**	
7	**009**	3	WPCAUX	0	FO	3	0005	HC01	N		WPCAUX-0-FO-3-0005-HC01-N	P550	---	FO Header from Main Tanks	FO Day Tank	**CHEFLG**	
8	**071**	1	WPCAUX	0	FO	3	0005	HC01	N		WPCAUX-0-FO-3-0005-HC01-N	P550	---	FO Header from Main Tanks	FO Day Tank	**BALL**	
9	**006**	3	CWPYRD	00	FO	3	010	HC01	N		00-FO-3-010-HC01-N	M3-2	---	Tank 2 Suction	FO Forwarding Pump	**BALL**	
10	**001**	3	CWPYRD	00	FO	3	009	HC01	N		00-FO-3-009-HC01-N	M3-2	---	FO Forwarding Pump	FO Supply Line	**BALL**	
11	**008**	1	CWPYRD	00	FO	3	009	HC01	N		00-FO-3-009-HC01-N	M3-2	---	FO Forwarding Pump	FO Supply Line	**BALL**	
12	**028**	3	CWPYRD	00	FO	3	009	HC01	N		00-FO-3-009-HC01-N	M3-2	---	FO Forwarding Pump	FO Supply Line	**CHECK**	
13	**003**	3	CWPYRD	00	FO	3	008	HC01	N		00-FO-3-008-HC01-N	M3-2	---	FO Supply Line	Return to Tank 1	**BALL**	
14	**010**	3	CWPYRD	00	FO	3	008	HC01	N		00-FO-3-008-HC01-N	M3-2	---	FO Supply Line	Return to Tank 2	**BALL**	
15	**002**	3	CWPYRD	00	FO	3	008	HC01	N		00-FO-3-008-HC01-N	M3-2	---	FO Supply Line	Return to Tanks	**BALL**	
16	**007**	3	CWPYRD	00	FO	3	008	HC01	N		00-FO-3-008-HC01-N	M3-2	---	FO Supply Line	Return to Tanks	**BALL**	
17	**035**	1	CWPYRD	00	FO	3	008	HC01	N		00-FO-3-008-HC01-N	M3-2	---	FO Supply Line	Return to Tanks	**BALL**	
18	**005**	3	CWPYRD	00	FO	3	010	HC01	N		00-FO-3-010-HC01-N	M3-2	---	Tank 1 Suction	FO Forwarding Pumps	**BALL**	
19	**036**	3	CWPYRD	00	FO	3	009	HC01	N		00-FO-3-009-HC01-N	M3-2	---	FO Forwarding Pump	FO Supply Line	**BALL**	

SECTION 40 90 00
I&C GENERAL REQUIREMENTS

PART 1 GENERAL

1.1 PURPOSE OF DOCUMENT

A. This section specifies the engineering and design criteria, I&C General Requirements, pertinent to the Instrumentation and Controls Discipline that are used to develop the Project Engineering design documents (Documents) for the Work.

B. Of emphasis is the principle that the Documents are functional and schematic in nature. Contractor is responsible to prepare detailed as-built drawings based on the equipment selected and provide a completely operational system that meets the requirements of the Documents. Any conflict between the design criteria and the Documents shall be brought to the notice of the Engineer. Engineer's/Owner's decision shall be final and followed by the Contractor for implementation at no extra cost to the Owner.

C. This is a multipurpose Specification that applies to the Contractor, the Contractor's Suppliers, and field installation teams. Certain aspects of the Specification may apply only to the field teams (i.e. startup). If questions of applicability arise, request clarification from Engineer.

1.2 APPLICABLE CODES AND STANDARDS

A. The latest edition for all codes and standards referenced in this Specification shall be the edition in effect at the time of Contract award.

B. All control systems and instruments shall be in compliance with the following Codes and Standards, where applicable:

1. American Petroleum Institute (API):
    a. RP 551, Process Measurement Instrumentation.
    b. RP 552, Transmission Systems.
2. American Society of Mechanical Engineers Standard (ASME):
    a. B16.34, Valves-Flanged, Threaded and Welding End.
    b. B16.36, Orifice Flanges.
    c. B31.1, Power Piping.
    d. MFC-3M, Measurement of Fluid Flow in Pipes Using Orifice, Nozzle, and Venturi.
    e. PTC-6, Steam Turbines.
    f. PTC-19.2, Pressure Measurement Instruments and Apparatus.

g. PTC-19.3, Temperature Measurement Instruments and Apparatus.
h. PTC-19.3 TW, Thermowells.
i. PTC-19.5, Flow Measurement.

3. ASTM International (ASTM):
   a. A123/123M, Standard Specification for Zinc (Hot-Dip Galvanized) Coatings on Iron and Steel Products.
   b. A213/213M, Standard Specification for Seamless Ferritic and Austenitic Alloy-Steel Boiler, Superheater and Heat-Exchanger Tubes.
   c. A269, Standard Specification for Seamless and Welded Austenitic Stainless Steel Tubing for General Service.
   d. E1137, Standard Specification for Industrial Platinum Resistance Thermometers.
4. Institute of Electrical and Electronics Engineers (IEEE):
   a. 1143, IEEE Guide on Shielding Practice for Low Voltage Cables.
   b. 1050, “Guide for Instrumentation and Control Equipment Grounding in Generating Stations”.
   c. C 37.1, “Standard Definition, Specification and Analysis used for Supervisory Control, Data Acquisition, and Automatic Control”.
   d. C 37.2, “Standard Electric Power System Device Function Numbers and Contact Designations”.
   e. C37.90.1, “Standard Surge Withstand Capability (SWC) Tests for Protective Relays and Relay Systems”.
5. International Society of Automation (ISA):
   a. MC 96.1, Temperature Measurement Thermocouples.
   b. RP12.4, Pressurized Enclosures.
   c. RP60.3, Human Engineering for Control Centers.
   d. RP60.6, Nameplates, Labels, and Tags for Control Centers.
   e. 7.0.01, Quality Standard for Instrument Air.
   f. 75.01.01, Industrial-Process Control Valves - Part 2-1: Flow capacity - Sizing equations for fluid flow under installed conditions.
   g. 77.70, Fossil Fuel Power Plant Instrument Piping Installation.
   h. ANSI/ISA 5.1, Instrumentation Symbols and Identification.
   i. 12.01.01, Definitions and Information Pertaining to Electrical Instruments in Hazardous (Classified) Locations.
   j. 12.12.01, Nonincendive Electrical Equipment for Use in Class I and II, Division 2 and Class III, Divisions 1 and 2 Hazardous (Classified) Locations.
   k. 20, Specification Forms for Process Measurement and Control Instruments, Primary Elements and Control Valves.
   l. 50.1, Compatibility of Analog Signals for Electronic Industrial Process Instruments.
   m. 51.1, Process Instrumentation Terminology.

6. National Electrical Manufacturers Association (NEMA):
   a. ICS-1, Industrial Control and Systems General Requirements.
   b. ICS-4, Terminal Blocks.
   c. ICS-6, Industrial Control and Systems Enclosures.
   d. 250, Enclosures for Electrical Equipment (1,000 Volts Max).
7. National Fire Protection Association (NFPA):
   a. NFPA 70, National Electrical Code.
   b. NFPA 85, Boiler & Combustion Systems Hazards Code.
   c. NFPA 496, Standard for Purged and Pressurized Enclosures for Electrical Equipment.
8. UL:
   a. 508, Standard for the Construction of Industrial Control Panels.
   b. 864, Control Units and Accessories for Fire Alarm Systems.
   c. 1076, Standard for Safety Proprietary Burglar Alarm Units and Systems.
9. All electronic equipment shall conform to the requirements of FCC Regulation Part 5, Section 15, governing radio frequency electromagnetic interference, and shall be so labeled.
10. HART Communication Foundation:
    a. HART Field Communication Protocol Specifications, Revision 7.0.
    b. Wireless WiHART standard HCF_SPEC-290 Revision 1.1.

1.3 DEFINITIONS

1. FDT: Factory Demonstration Test.
2. HMI: Human-Machine Interface.
3. HVAC: Heating, Ventilating, and Air Conditioning.
4. I&C: Instrumentation and Control.
5. I/O: Input and Output.
6. O&M: Operation and Maintenance.
7. P&ID: Process and Instrument Diagram.
8. PC: Personal Computer.
9. PLC: Programmable Logic Controller.
10. PSS: Process SCADA System.
11.
12. PSS System Integrator – Specialty subcontractor who is responsible for developing the Process SCADA SystemRTU: Remote Terminal Unit.
13. SCADA: Supervisory Control and Data Acquisition.
14. SLDC: Single Loop Digital Controller.
15. SSDT: Staging Site Demonstration Test.

B. Enclosure: Control panel, console, cabinet, or instrument housing.

C. Instructor Day: Eight hours of actual instruction time.

1.4 SOURCE QUALITY CONTROL

A. General:

1. Engineer may actively participate in testing as desired.
2. Engineer reserves the right to require Contractor to test or retest specified functions.
3. Engineer's decision shall be final regarding acceptability and completeness of testing.
4. Procedures, Forms, and Checklists:
    a. Except for Unwitnessed Factory Test, conduct tests in accordance with, and documented on, Owner/Engineer accepted procedures, forms, and checklists.
    b. Describe each test item to be performed.
    c. Test procedures shall include:
        1) Testing safety considerations including PPE required and list of other potential hazards and mitigation strategy's.
        2) List of all tools and apparatus' used during testing
        3) Current NIST calibrated traceability listed for all testing equipment including last date of calibration.
    d. Have space after each test item description for sign off by appropriate party after satisfactory completion.
5. Required Test Documentation: Test procedures, forms, and checklists signed by Engineer and Contractor.
6. Conducting Tests:
    a. Provide special testing materials and equipment.
    b. Wherever possible, perform tests using actual process variables, equipment, and data.
    c. If not practical to test with real process variables, equipment, and data provide suitable means of simulation.
    d. Define simulation techniques in test procedures.
    e. Test Format: Cause and effect.
    f. Expected cause and expected effects or results shall be clearly defined for each test.PContractor shall provide adequate application software for FDT and SSDT testing of these subsystems.

B. Unwitnessed Factory Test:

1. Scope: Inspect and test PSS to ensure it is operational, ready for FDT.
2. Location: PSS System Integrator's facility.
3. Integrated Test:
    a. Interconnect and test PSS, except for primary elements and smaller panels.
    b. Exercise and test functions.
    c. Provide stand-alone testing of smaller panels.

d. Simulate inputs and outputs for primary elements, final control elements, and panels excluded from test.

C. Factory Demonstration Tests (FDT):

1. Notify Owner and Engineer of test schedule 4 weeks prior to start of test (Note: Notification shall NOT precede and approved testing procedure).
2. Scope:
   a. Test entire PSS, with exception of primary elements, final control elements, and certain smaller panels, to demonstrate it is operational.
      1) Packaged system Subcontractors shall provide a mockup sample of the PSS software for interface testing. Including the following systems: Gas Turbine, Gas Compression, Diesel Engine Driven Generator Sets, Balance of Plant Equipment such as Air Compressors and Water Treatment.
   b. Refer to Control Panel referenced in Specification 40 94 23 PSS for a list of panels for which FDT is required.
3. Location: PSS System Integrator's facility.
4. Accuracy of wiring from panel field terminals to PLC system input/output points and to panel components.
   a. Simulate each discrete signal at terminal strip.
   b. Simulate correctness of each analog signal using current source.
5. Operation of communications between PLCs and remote I/O and between PLCs and Operator Workstations.
6. Operation of communications between the PLC system, single loop controllers (SLC).
7. Loop-Specific Functions: Demonstrate functions shown on P&IDs, control diagrams, and loop specifications:
   a. One of each type function; for example, if there are pump control sequences for several identical pumps, demonstrate controls for one pump.
   b. One of each type of function in each panel; for example, but not limited to annunciator operation, controller operation, and recorder operation.
   c. All required and shown functions for 100 percent of loops.
8. Nonloop-Specific Functions:
   a. Capacity: Demonstrate that PSS systems have required minimum 20% spare capacity for expansion. Include tests for both storage capacity and processing capacity.
   b. Timing: Include tests for timing requirements.
   c. Diagnostics: Demonstrate online and offline diagnostic tests and procedures.
9. Record and correct deficiencies found and complete prior to shipment to Site.

10. Failed Tests:
    a. Repeat and witnessed by Engineer or Owner's designee.
    b. With approval of Engineer, certain tests may be conducted by PSS System Integrator and witnessed by Engineer as part of Functional Test.
11. Make following documentation available to Engineer at test site both before and during FDT:
    a. Drawings, Specifications, Addenda, and Change Orders.
    b. Master copy of FDT procedures.
    c. List of equipment to be tested including make, model, and serial number.
    d. Approved hardware Shop Drawings for equipment being tested.
    e. Approved preliminary software documentation Submittal.
12. Daily Schedule for FDT:
    a. Begin each day with meeting to review day's test schedule.
    b. End each day with each meeting to review day's test results and to review or revise next day's test schedule.

PART 2 EXECUTION

2.1 DESIGN CRITERIA

A. All instrumentation shall be supplied as defined in the Specifications. Only devices that are normally or commonly used in power plant type applications shall be approved. Approved Contractors are identified in Section 40 91 00, Instrumentation and Control Components.

B. Data Sheets shall be provided for all instrumentation and control valves, including items furnished with packaged equipment. These Data Sheets may be Contractor standard but shall contain all the information in ISA-style specification forms, similar to ISA – S20 Specification Forms for Process Measurement and Control Instruments, Primary Elements and Control Valves. Contractor shall complete the preliminary data sheets provided in the Contract Documents based on approved Contractor Shop Drawings.

C. All transmitters, switches, pressure relieving devices, and control valves shall be calibrated by the manufacturer or Contractor before the equipment is shipped. Calibration sheets shall be submitted to the Engineers for approval.

D. Transmitters are preferred over switches for most applications. However, where switches are provided because of process or code requirements, they shall be provided with epoxy-coated aluminum or stainless steel enclosure rated NEMA 4X minimum (explosion proof in Class I, Division 2, Group D environments), and shall be snap action type with hermetically sealed dual Form C switch dry contacts rated 5A resistive at 120V ac, 0.5A resistive at 125V dc, or 2A resistive at 30V dc. All contacts used with interrogation voltages under 120 Volts shall have gold flashed contacts.

E. For packaged equipment:

1. The equipment Contractor shall provide all instrumentation and controls prewired with wiring, raceway, and a junction box or local panel at a single location on the skid battery limit so that all Contractor instrumentation and control system field wiring is terminated to one location at the skid limit. All terminations shall be brought to terminal strips including all spares.
2. If a local panel is located exterior to the package battery limit, the Engineers will locate the panel but it shall be the Contractor's responsibility to furnish Interconnection Drawings for the wiring between the package unit junction boxes and this local panel.
3. The Contractor shall provide instruments mounted, tubed, and wired which:
    a. Are an integral part of the equipment, such as speed governors, overspeed trips, etc.
    b. Require special provisions on the equipment depending on the specific instrument to be used, such as electronic detectors for speed, vibration and axial displacement on running equipment, and thermocouples for bearing metal and thrust pad temperatures.
    c. Are supplied as part of the equipment. This includes anti-surge controls for centrifugal compressors and burner management systems for boilers, fired heaters, flares, etc., and sequencing, monitoring, protection, and regulating control of reciprocating compressors.
    d. Are specified in the Equipment Data Sheets.
    e. Are integral inline instruments including control/regulating valves and pressure relieving devices for Package Units that comprise lube, seal or control oil systems.
    f. Are protected from additional heat input from the sun or from thermal radiation from nearby equipment, as required by the location and ambient conditions, and the instrumentation and control equipment environmental specifications.

B. Analog control instrumentation that interfaces with the main plant control equipment shall use isolated 4-20 mA dc with HART protocol. Equipment Contractor shall note on the Data Sheets if an instrument is loop-powered or requires a separate power feed.

C. All process transmitters shall be of the 4 to 20 mA type with HART interface for hand-held calibrators. Transmitters shall be "SMART" electronic, microprocessor based, two-wire type equipped with LED indicators calibrated in process engineering units (pounds/hour, inches, inches H_2O, degree F, psig, etc.). The transmitters shall be custom calibrated and calibration certificates are to be furnished. Each transmitter shall be electronically encoded with the instrument tag number.

D. Local control valves shall be pneumatic unless process conditions dictate otherwise.

E. Filter regulators with output pressure gauge shall be provided for all pneumatically operated control equipment.

F. The plant instrument air supply shall be 80 psig minimum and 125 psig maximum. Any pressure reduction below this range is the responsibility of the equipment Contractor.

G. Control valve, pressure relief valve, and flow measuring device calculations shall be prepared using customary imperial U.S. Units.

H. All elastomers (liners, gasketing, packing, etc.) and wetted materials are to be compatible with the process service.

I. All electronic instrumentation shall be immune to Radio Frequency Interference (RFI).

J. All control systems shall be designed for safe failure positions in the event of a complete loss of electrical power and/or instrument/plant air systems. All such failures shall generate an alarm contact for use by the Process SCADA System. All valve fail positions shall be noted on P&ID's.

K. At no time shall any voltage in excess of 125V dc or 120V ac, 60-Hz be allowed in any instrument/control systems panel without express written release from the Engineers.

L. Electrical startup/shutdown systems where involved with control systems shall be energized for normal operation and de-energized for shutdown position, unless otherwise specified by the Engineers.

M. The equipment and its installation shall meet with the area electrical classification stated (created by same equipment or external factors) on the Equipment Data Sheets and the Hazardous Area Location Diagrams.

N. Alarm or shutdown actuating transmitters or switches shall be separate from any devices used for normal process control.

O. All alarm circuits shall be normally energized, de-energized to trip. Emergency shutdown circuits shall be de-energized to trip where practical. Where energize to trip circuits shall be used, each circuit shall be provided with an undervoltage relay. All contacts for generating alarms shall be closed during normal operation and opened on a fault condition.

P. Control switches such as pressure switches having two sets of contacts with independently adjustable settings shall not be used. In lieu of dual type controls, two separate devices shall be provided.

Q. The following voltages shall be used for field interrogation and outputs in the Plant Control System:

1. MCC Inputs to the PLC: 120V ac.
2. MCC Outputs from the PLC: 120V ac.
3. Digital Inputs to the PLC: 24V dc.
4. Digital Outputs to Solenoid Valves: 24V dc.
5. Digital Inputs to relay logic systems: 24V dc.
6. Digital Outputs from the PLC: 24V dc (125V dc for electrical protection circuits).
7. Analog Inputs: 24V dc powering 4-20mA signal.
8. Analog Outputs: 24V dc powering 4-20mA signal.

R. Instruments shall not be located in areas where the ambient temperature exceeds 130 degrees F or areas exceeding manufacturers requirements.

S. Instruments shall not be supported on handrails or equipment subject to vibration.

T. Instruments subject to vibration shall be mounted to minimize the effect of vibration. An anti-vibration mount may be used.

U. Fiber optic cable shall be installed and terminated by a licensed Contractor certified in fiber optic installation.

V. Instruments shall be mounted with a clearance of at least 2 feet per 100 degrees F from equipment with surface temperatures in excess of 200 degrees F.

W. Provide minimum 18-inch clearance for worker access around an instrument installation. For specific instrument installation, refer to instrument installation detail drawings provided. Do not install instrumentation so that it protrudes into walkways.

X. Local instruments shall be mounted no more than 30 feet from the point of measurement without Owner/Engineer’s approval.

Y. If the adjustment of one locally mounted instrument device affects the operating of another (such as local controllers and control valves), the devices shall be mounted so that both devices can be seen at the same time.

Z. Mount instruments so centerline of device is 4 feet 6 inches above the platform or grade.

AA. The connection or welding of instrument supports or brackets to structural steel shall be approved by the Engineer prior to performing the actual work.

BB. Welding on process equipment or process piping shall be approved by the Engineer prior to performing the actual work.

CC. Support and protect capillary tubing of filled and sealed instruments from damage. Do not cut or remove capillary tubing. Any extra length shall be neatly coiled at the instrument end of the tubing.

DD. Materials that are to be attached or clamped to process piping or equipment shall be selected to avoid electrolysis.

EE. Junction boxes shall be mounted in the vertical plane. Tubing and conduit penetrations shall be made in sides or bottom of junction box to prevent water entry. Unused entry holes shall be blanked. Adequate clearance shall be provided for door swing.

2.2 FIELD QUALITY CONTROL

A. General:

1. Coordinate PSS testing with Owner and affected Contractors.
2. Notify Owner/Engineer of Performance Test schedule 4 weeks prior to start of test.
3. Owner/Engineer may actively participate in tests.
4. Owner/Engineer reserves right to test or retest specified functions.
5. Owner/Engineer's decision shall be final regarding acceptability and completeness of testing.

B. Onsite Supervision:

1. Require PSS System Integrator to observe PSS equipment installation to extent required in order to provide Certificates of Proper Installation.
2. Require PSS site representative to supervise and coordinate onsite PSS activities.
3. Require PSS site representative to be onsite while onsite work covered by this section and PSS subsystems is in progress.

C. Testing Sequence:

1. Provide Functional Tests and Performance Tests for facilities as required to support staged construction and startup of plant.
2. Refer to Section 01 91 14, Equipment Testing and Facility Startup, for overall testing requirements.
3. Completion: When tests (except Functional Test) have been completed and required test documentation has been accepted.

D. Testing:

1. Preparation for Testing: Performed by PSS System Contractor to test and document PSS is ready for operation.
    a. Loop/Component Inspections and Tests:
        1) These inspections and tests do not require witnessing.
        2) Check PSS for proper installation, calibration, and adjustment on loop-by-loop and component-by-component basis.
        3) Provide space on forms for signoff by PSS System Contractor.
        4) Use loop status report to organize and track inspection, adjustment, and calibration of each loop and include the following:
            a) Project name.
            b) Loop number.
            c) Tag number for each component.
            d) Checkoffs/Signoffs for Each Component:
                (1) Tag/identification.
                (2) Installation.
                (3) Termination wiring.
                (4) Termination tubing.
                (5) Calibration/adjustment.
            e) Checkoffs/Signoffs for the Loop:
                (1) Panel interface terminations.
                (2) I/O interface terminations with PLCs.
            f) I/O Signals for PLCs are Operational: Received/sent, processed, adjusted.
            g) Total loop operational.
            h) Space for comments.
        5) Component calibration sheet for each active I&C component (except simple hand switches, lights, gauges, and similar items) and each PLCs I/O module and include the following:
            a) Project name.
            b) Loop number.
            c) Component tag number or I/O module number.
            d) Component code number for I&C elements.
            e) Manufacturer for I&C elements.
            f) Model number/serial number for I&C elements.
            g) Summary of Functional Requirements; For Example:
                (1) Indicators and recorders, scale and chart ranges.
                (2) Transmitters/converters, input and output ranges.

(3) Computing elements' function.
(4) Controllers, action (direct/reverse) and control modes (P, I, D).
(5) Switching elements, unit range, differential (fixed/adjustable), reset (auto/manual).
(6) I/O Modules: Input or output.

h) Calibrations, for example, but not limited to:
(1) Analog Devices: Actual inputs and outputs at 0, 10, 50, and 100 percent of span, rising and falling.
(2) Discrete Devices: Actual trip points and reset points.
(3) Controllers: Mode settings (P&ID).
(4) I/O Modules: Actual inputs or outputs of 0, 10, 50, and 100 percent of span, rising and falling.
(5) Space for comments.

b. Maintain loop status reports, valve adjustment sheets, and component calibration sheets at Site, and make them available to Engineer at all times.
c. Engineer reviews loop status sheets and component calibration sheets and spot-check their entries periodically, and upon completion of Preparation for Testing. Correct deficiencies found.
d. FDT-Repeat:
1) Repeat FDT onsite with installed PSS equipment and software.
2) As listed in PSS subsections, certain portions of FDT may not require retesting.
3) Use FDT test procedures as basis for this test.
4) In general, this test shall not require witnessing. However, portions of this test, as identified by Engineer during original FDT shall be witnessed.
e. Forms: See Performance Acceptance Test Sheet, Instrument Calibration Sheet, and I&C Valve Adjustment Sheet referenced in Article Supplements. For Loop Status Report requirements, see paragraph 2.02 D1. And Article Supplements for an example.

2. Functional Test:
a. Scope: Confirm PSS, including applications software, is ready for operation.
b. Refer to PSS subsections for additional requirements.
c. Completed when Functional Test has been conducted and Engineer has spot-checked associated test forms and checklists in field.

3. Required Test Documentation: Test procedures, forms, and checklists. Signed by Engineer and Contractor except for Functional Test items signed only by Contractor.

E. Performance Test During and After Facility Startup:

1. Once a facility's Functional Test has been completed and that facility has been started up, perform a witnessed. Performance Test on associated PSS equipment to demonstrate that it is operating as required by Contract Documents. Demonstrate each required function on a paragraph-by-paragraph, loop-by-loop, and site-by-site basis.
2. Loop-specific and non-loop-specific tests same as required for FDT except that entire installed PSS tested using actual process variables and functions demonstrated.
3. Perform local and manual tests for each loop before proceeding to remote and automatic modes.
4. PSS Contractor to Equipment Contractor Interface Testing:
    a. These tests are a subset of PSS Performance Testing.
    b. This subset shall be performed to verify the interface of the following packaged control systems with the PSS:
        1) Section 48 11 23, Combustion Turbine Generator.
        2) Section 43 12 00, Fuel Gas Compressor.
        3) Section 26 32 13, Diesel Engine Driven Generator Sets.
        4) Section 22 15 19, Air Compressor Package.
    c. This subset of the PSS Performance Testing includes verification of all PSS-based monitoring of the Contractor's equipment.
    d. The PSS to Equipment Contractor Interface Testing shall not commence until after the successful completion of the functional testing of the equipment Contractor's control system, as described in the section specifying all the Contractor's equipment.
        1) Deferral of this PSS to Equipment Contractor Interface Testing to a period after the completion of the equipment's functional testing does not eliminate the PSS Contractor or equipment Contractor from coordination or completion of work required to successful complete the equipment's functional testing.
        2) The Engineer, at their own discretion may consider portions of the PSS to Equipment Contractor Interface Testing as complete during the execution of the equipment's functional testing. This would require:
            a) The function associated with the portion of the PSS to Equipment Contractor Interface Testing was successfully demonstrated.
            b) PSS Performance Test procedure submittal has been approved.

c) The Engineer opts to witness the function with the portion of the PSS to equipment Contractor interface testing.

e. The equipment Contractor or their representative shall provide the following services related to the PSS to Equipment Contractor Interface Testing:
   1) Assist the PSS Contractor in development of the testing procedure submittal.
      a) These procedures shall include a detailed list of data being exchanged between the equipment Contractor and PSS Contractor systems.
      b) Be onsite and participate in the test.
      c) Perform simulations as required to execute the tests.
      d) Troubleshoot the Contractor equipment and control system as required by test results.
      e) Correct packaged control system PLC or OIU errors uncovered during testing.

5. Where possible, verify test results using visual confirmation of process equipment and actual process variable. Unless otherwise directed, exercise and observe devices supplied by others, as needed to verify correct signals to and from such devices and to confirm overall system functionality. Test verification by means of disconnecting wires or measuring signal levels is acceptable only where direct operation of plant equipment is not possible.
6. Make updated versions of documentation required for Performance Test available to Engineer at Site, both before and during tests.
7. Make O&M data available to Engineer at Site both before and during testing.
8. Follow daily schedule required for FDT.
9. Determination of Ready for Operation: When Functional Test has been completed.
10. Refer to examples of Performance Test procedures and forms in Article Supplements.

2.3 DOCUMENTATION REQUIREMENTS

A. The following types of instrument and controls documentation shall be generated by the Engineer as part of the Contract Documents, to define scope of work for field installation. These documents are generic and functional in nature. The Contractor shall modify and/or add missing information based on Manufacturer's approved Shop Drawings to customize all Documents. Contractor is responsible to keep a record of changes required during construction and customizing all I&C Drawings and provide record drawings for the Project.

1. Process and Instrument Diagrams (P&IDs): Using ANSI/ISA5.1-2024 Instrumentation and Symbols and Identification to denote instrumentation and controls, including all interfaces with other plant equipment.
2. Instrument Location Drawings: Instrument locations shall be shown either on dedicated Instrument Location Drawings or may be shown on Piping Plan Drawings or Electrical Plan Drawings.
3. Instrument Index:
    a. A list of all instruments including: Tag number, service description, manufacturer, model, type, size, calibrated range and when available operating data including ranges and set points. Contractor to customize based on Manufacturer/Contractor's approved Shop Drawings.
    b. The instrument index shall also list control valves including: Tag number, service description, manufacturer, model, type, size, end connections, actuator information, min/normal/max process conditions, C_v (flow coefficient), and all other pertinent information. Any Manufacturer specific information shall be filled in by the Contractor.
    c. Shall be provided in both hard copy and in Microsoft Excel electronic file format.
4. Instrument Installation and Arrangements Drawings: For all instruments and valves shipped loose that shall require installation in the field.
5. Control system documents to be used by the Contractor for application programming:
    a. For all control, monitor, alarm, shutdown or interlock loops.
    b. Sequence of Operations.
    c. Logic - ladder logic or block diagram form.
6. Data Sheets:
    a. Preliminary Data Sheets shall be provided in the Contract Documents for all instruments and control valves.
    b. Shall be presented in format that contains all the information in ISA-S20 Specification Forms for Process Measurement and Control Instruments, Primary Elements and Control Valves.

c. Based on Contractor/Manufacturer's approved Shop Drawings Contractor shall update all data sheets and fill in missing information.

7. Contractor shall provide the following additional documentation:
   a. Instrument calibration sheets.
   b. Following updated/record drawings:
      1) Instrument Index.
      2) I/O Lists.
      3) Wiring/Interconnection drawings.
      4) Ladder Logic or block diagrams.
      5) Instrument Data Sheets.
      6) Safety Shutdown Cause and Effect Matrix
   c. Dimensional drawings.
   d. Manufacturer wiring diagrams with terminal identification, make and type.
   e. Installation and maintenance instructions.
   f. Sizing calculations for all control valves, relief valves, regulating valves, and flow elements.
   g. Thermowell wake frequency calculation per ASME PTC 19.3.
   h. Ship-Loose List: A list of instruments and valves shipped loose that shall require installation in the field.
   i. Following Application Programming Related Documentation:
      1) PLC ladder listings, hard copy and electronic copies.
      2) Data exchange tables for all PLC and other data links specified and shown on the Drawings.
      3) Central computer server data base and configuration.
   j. Complete wiring and pneumatic connection drawings.

2.4 TAGGING REQUIREMENTS

A. Refer to Section 01 58 53, Project Equipment identification, for tag format.

B. Equipment Tagging:

1. All instruments and control valves shall be assigned a unique tag number per the project equipment identification specification listed above.
2. All instruments and control valves shall be labeled with the instrument tag number engraved on a Type 316 stainless steel tag. The tag and wire shall be stainless steel and riveted or wired to the device. As a minimum the tag shall have the service description and instrument tag number.

3. If the tag is riveted, it shall have a character height of 0.125 inches, 90 characters maximum or permanently stamped on the instrument with 65 characters maximum.
4. If the tag is attached with wire, the wire shall be minimum 12-gauge solid or braided stainless steel wire; stranded wire is prohibited. Wire ends shall be joined with compression-type clamps; wire ends shall not be joined by twisting. The tag minimum size shall be 1-inch by 2.5 inches, with a minimum thickness of 1/16 inch.
5. The tag numbers to be used for the project are to be shown as such on the P&IDs and other documents, Data Sheets, and Drawings submitted for the Project.

C. PLC Signal Tagging (Part of Contractor's Scope of Work):

1. All hardwired and datalink signals between PLCs shall be assigned a unique tag per the project equipment identification specification listed above.
1. All PLC hardwired and soft datapoint addresses shall be documented and submitted for approval prior to the performance of a Factory Acceptance Test (FAT).

2.5 CONTROL PANELS

A. General:

1. Large free-standing upright panels or wall mount panels shall be provided.
2. Panels shall have internal light and switch and 120-volt duplex grounding type receptacle wired to a junction box to be fed from a separate external circuit.
3. Panel power for equipment control shall be fed from a separate circuit, but not the same circuit as the lighting circuit.
4. Panels to be mounted outdoors shall be provided with strip heaters and thermostatic controls.
5. Panels in hot environments shall be provided with cooling equipment such as fans and thermoelectric coolers, as required by internal components.
6. All panels shall have 20 percent spare I/O terminal blocks for connection of external wiring, and 20 percent spare space for future equipment.
7. All panels associated with package units shall be designed and supplied by the package Contractor. Front of panel layout drawings and electrical or tubing schematic drawings shall be submitted to the Engineers for approval prior to fabrication.
8. The location of a panel on a Contractor package shall be specified and shown on the General Arrangement Drawings submitted for review.

Panel front and location of any panel doors shall be shown on the General Arrangement Drawings.

9. Panels shall be arranged so that the 5th percentile woman and the 95th percentile man, as defined by ISA RP60.3, can easily monitor and operate the instrumentation and controls mounted on the panel. No panel front equipment shall be mounted less than 30 inches above the operator platform level. No controls shall be installed greater than 56 inches above the operator platform level.
10. Panels shall be of 12-gauge minimum welded steel construction, framed, braced with angle or channel steel as necessary. All panels located outdoors shall have a rain and/or hail shield to protect equipment mounted on the front of the panel.
11. Furnish NEMA 4X panels for unconditioned indoor areas, and all outdoor areas.
12. Panels for indoor service with climate control shall be rated NEMA 12.
13. Panels in classified areas shall be explosion proof or NEMA 4X with purge air to maintain a positive internal pressure.
14. All panel doors shall be gasketed. All control panel doors shall include a locking three-point latch. Provide one key for each panel. All panels to be keyed alike. NEMA 4 panel door clips shall not be supplied without written authorization by the Engineers. Only panels in washdown areas shall be allowed to be supplied with door clips.
15. Panel doors shall be full-length flush pan with full-length stainless steel piano hinges rated for 1.5 times the door plus instrument weight.
16. All panels including instrument components, electrical wiring, and devices shall conform to the electrical area classification specified in the Equipment Data Sheets.
17. Wiring and panel assembly shall conform to UL 508A and all local codes.
18. Nameplates shall generally be 1 inch by 3 inches with up to four lines of 3/16-inch high engraving with 15 characters per line. Nameplates shall be engraved lamicoid, white with black core. Nameplates shall be fastened to the panel surface with stainless steel screws. Adhesive attachment of nameplates is prohibited. Nameplate abbreviations shall comply with the requirements of ISA RP60.6, Appendix B or latest revision. Abbreviations not listed in ISA RP60.6 shall be approved in writing by the Engineers.
19. Wiring and terminal blocks shall be tagged with permanent markers. Adhesive markers are not permitted. Nameplates shall not be attached to removable covers or relays but to the enclosure backplane.

20. Panel and all associated equipment shall be suitably secured and protected to ensure that it shall not be damaged in shipment or storage at the job site. Site storage shall be covered, but not necessarily ventilated, heated or cooled. The Contractor shall define storage and preservation requirements.
21. Each panel which is not permanently mounted and shipped by the Contractor of an equipment package unit shall be provided with removable lifting lugs. Lifting lugs shall be capable of supporting the panel weight.
22. Panel annunciator windows shall have a minimum size of 1 inch by 3 inches. All annunciator lamp boxes shall have 20 percent spare windows. Spares shall be evenly distributed across the lamp boxes. Each alarm point of local annunciators shall be supplied with auxiliary contacts for retransmission of alarm signals for use in the Plant Control System.
23. Annunciator sequence for shutdown alarms shall be first out, manual reset (ISA AFM sequence). Annunciator sequence for trouble alarms shall be automatic reset (ISA A sequence). A complete nameplate legend shall be supplied for the Engineers to review and approve.
24. Two alarm points representing different alarm conditions shall not appear on the same lamp box window. For example, a single alarm window indicating High/Low Lube Oil Pressure is strictly prohibited. Dedicated windows shall be provided for each alarm condition.
25. Control/instrument panel indication light colors shall be:
    a. Green: Not Running/Breaker Open/Valve Not Open.
    b. Red: Running/Breaker Closed/Valve Not Closed.
    c. Yellow: Warning, Alarm, Manual.
    d. Blue: Permissives Met, Automatic.
    e. White: Status Indication.
    f. Clear: Ground Detection.

B. Panel Wiring Requirements: See Electrical Requirements for Packaged Mechanical Equipment, Section 26 05 04, Electrical Requirements for Packaged Mechanical Equipment.

C. Panel Tests:

1. The Contractor shall advise the Engineers when the panels are complete. A detailed inspection with functional checkout may be required. The Contractor shall coordinate such inspection and tests in the following manner.
    g. The Contractor shall energize all of the electrical circuits at least 24 hours before the tests are conducted. The panel shall remain energized throughout the test.
    h. The Contractor shall inform the Engineers when the Engineers' inspectors or designated representative(s) can arrive to witness

the test and perform the inspection. A minimum of 5 days' notice is required.

i. The Contractor shall provide the necessary labor, space, test equipment and tools to perform a complete panel functional test. Panel inputs and outputs shall be simulated with a test panel consisting of switches and lights.

26. If the Contractor fails to perform the necessary checks or is unable to present the panel for inspection when the Engineers' Inspector or designated representative(s) arrive, the Contractor shall be liable for back charges for extra time required for the Inspection Personnel Services.

2.6 CONTROL VALVES\SHUT DOWN VALVES

A. Specifications: Refer to Section 40 92 13, Process Control Valves and Regulators, for specifications Control Valves and Operators.

2.7 PROGRAMMABLE LOGIC CONTROLLERS (PLC) AND COMPUTER WORKSTATIONS

A. Reference PLC Equipment List in PLC components in Section 40 91 00, Instrumentation and Control Components.

2.8 PSS MISCELLANEOUS DATA LINKS

A. The Contractor is responsible to implement all data links shown on the Drawings and specified in the individual Specification sections. These data links shall allow efficient data exchanges between self-contained purpose based control package systems, the Plant Control System, computer workstations, and existing plant control systems.

2.9 INSTALLATION PRACTICES

A. Work Included:

1. Instrument and controls installation includes, but is not limited to, the following.
2. Instrumentation and controls receipt, storage and handling.
3. Protecting of all instruments, controls, PLC enclosures, and bulk instrumentation materials from the time of receipt at the jobsite until final completion. This includes temporary protection after installation until equipment is put in service (for example, protection from material falling from above, or protection from damage due to workers climbing on or near equipment).
4. Furnishing and installation of all necessary bulk instrumentation materials such as tubing, valves and manifolds, fittings, piping, instrument mounting stands, enclosures, wiring, wire markers, etc. that

are required to perform the specified work. Individual instrument installation details have an abbreviated Bill of Material which references a Master Bill of Material. It is the Contractor's responsibility to do a complete and thorough material take-off using these Drawings and documents.

5. Location of instrument and controls equipment based on supplied location plans, piping isometrics and other applicable Drawings.
6. Installation of all instrumentation and controls. The installation shall include all required wiring and tubing.
7. Installation of on skid control systems.
8. Providing all necessary supervision, labor, tools, test equipment, facilities, temporary supplies, and any other equipment required to test and calibrate the instruments and controls for the Project, including those instruments supplied and installed with skid mounted equipment or packaged mechanical equipment. All workers shall be skilled in the work to which they are assigned, and all work shall be performed under the direct supervision of an experienced and competent foreman.
9. Tagging of any instrument that does not have a factory installed nametag.
10. Maintaining a current set of marked up "Record" documents for later incorporation on "as-built" drawings.

B. Work Not Included: The Contractor shall be responsible for all installation work associated with this Project. No installation work is specifically excluded from the scope of Work.

C. Receiving, Storage, and Handling:

1. All instrumentation and control panels shall be received, inspected and stored by the Contractor at the jobsite until the instruments are ready to be installed. All instrument tag numbers, and model numbers shall be verified against the instrument datasheets, instrument index, and Contractor documentation. Any discrepancies shall be brought to the attention of the Owner. Any item received by the Contractor without a tag number shall be tagged with a stainless steel tag by the Contractor prior to placing the item into storage.
2. Store all items in a clean, dry place. Protect from weather, dirt, water, construction debris, and physical damage in accordance with manufacturer's instructions.

D. Products:

1. Tubing:
    a. For process tubing, defined as piping running between an instrument and the block valve nearest the process. For instrument air supply tubing, defined as piping running

between the control valve or instrument and the block valve on the air header or subheader.

b. Conform to ASTM A269/A213.

c. Type 316 stainless steel, seamless, annealed and pickled. The tubing shall be 1/2-inch OD for most applications. Contractor shall obtain Owner's permission for use of other tubing sizes on specific applications.

d. Wall thickness of the tubing is dependent on the pressure and temperature conditions of the process. Minimum wall thickness of the tubing shall comply with Table 1, but in no case shall wall thickness be less than 0.049 inch.

e. Pressure-temperature rating of tubing shall be accurately determined from tubing manufacturer's product Specifications.

Table 1
Minimum Wall Thicknesses For Tubing
(ASTM 269/A213 Type 316 Stainless Steel)

Pressure Rating (psig)	Size (OD, Inch)	Wall Thickness (Inch)
2,000 and below	3/8	0.049
	1/2	0.049
2,000 to 4,000	3/8	0.065
	1/2	0.065
4,000 to 6,000	3/8	0.065
	1/2	0.083

2. Tubing Fittings:
   a. Type 316 stainless steel, conforming to ASTM A213/A213M and ASTM A269.
   b. Fittings shall be compression type with two ferrules and hex nut, Swagelok "or-equal."
   c. Male threads shall be rolled. Nuts shall be pre-lubricated.
   d. Only one brand of tubing fittings shall be provided for entire Project.
3. Valves and Manifolds:
   a. Process tubing runs for pressure instruments shall have a manifold valve installed directly mated to (preferably), or next to, instrument. Typically, this manifold is provided by Contractor with the instrument.
   b. The body, stem, and trim of the process tubing valves shall be Type 316 stainless steel minimum. More corrosion resistant materials shall be provided if required by process service.

c. Gauge and absolute pressure instruments shall be provided with 2-valve manifolds. Differential pressure instruments shall be provided with 5-valve manifolds.
d. Valves/manifolds in services with pressures below 4,000 psig shall have compression type tubing connectors.
e. Valves/manifolds in services with pressures above 4,000 psig shall have bar-stock bodies with nonrotating stems and threaded end connections.
f. PTFE packing shall be provided for services below 450 degrees F. Graphite packing shall be provided for services above 450 degrees F.
g. Packing shall be nonasbestos.
h. Packing and seat material shall be designed to withstand full process operating pressures and temperatures.
i. Support valves/manifolds independently of tubing.

4. Tubing Raceways:
   a. If required by Project Specifications, construct of either hot-dip galvanized steel in accordance with ASTM A123/A123M or heavy-duty reinforced fiberglass.
   b. Accessories such as nuts, bolts, and clamps shall be Type 316 stainless steel.
   c. Angle bracket shall be fabricated of Type 316 stainless steel or hot-dip galvanized steel. Beam clamps shall be galvanized steel.
   d. Widths: 1 inch, 1-1/2 inches, 2-1/2 inches, and 4 inches.
   e. Depths: 3/4 inch and 1 inch.
   f. Support tubing every 3 feet of running length of tubing.
   g. Slope tubing in accordance with instrument installation details. Minimum slope is 1/2 inch per foot.

E. Instrument Electrical:

1. General:
   a. Ensure that instrumentation comply with NFPA 70, as amended by the local jurisdiction.
   b. Confirm that wire and cable construction and materials are suitable for special conditions such as high temperature, intrinsically safe and corrosive or contaminated environments.
   c. Electrical enclosures, conduit, and fittings shall comply with the requirements of the Project electrical Specifications.
   d. Control signal and power supply cables shall comply with the requirements of the Project electrical Specifications.
2. Wiring Methods:
   a. Electrical wiring and equipment shall be installed in accordance with the Project electrical Specifications.
   b. Wire nuts and splices are not permitted.

c. Instrument control signal cables and electrical power cables shall only cross at right angles.
d. 24V dc signal wiring shall not be installed in the same tray, channel or raceway with 120V ac or higher electrical wiring.
e. Care shall be taken in the layout of terminals and in the wiring method used to prevent contact between circuits if a wire becomes disconnected.

3. Electrical Transmission System:
   a. Signal for the electrical transmission system shall be direct current (DC). Signal current shall be 4 to 20 milliamperes (mA).
   b. Terminals shall contain screw-clamp or spring clamp type terminal blocks with Phoenix Contact ("Or-equal") terminal connectors with pre-printed terminal block markers.
   c. Thermocouple signals shall be millivolt (mV).
4. Thermocouple terminals of the proper type shall be utilized for signal interface.

F. Field Junction Boxes:

1. Terminal boxes, junction boxes and field panels shall be rated NEMA 4X minimum and shall be constructed of Type 316 stainless steel with stainless steel hardware.
2. On any skid requiring connection between on-skid instrumentation and control devices and off-skid instrumentation and control devices, skid Contractor shall provide an on-skid instrumentation junction box on a structural steel support. Junction boxes are to be manufactured according to Project Drawings. A nameplate shall be installed on the face of the junction box identifying as a minimum its tag number, service description, and Project name.

G. Mounting:

1. Field instruments shall be installed and mounted as required or recommended by ISA 70.70 standard, ASME PTC 19.2, PTC 19.3, PTC 19.5, and PTC 46.
2. Field instrument installation details have been prepared by the Engineers. Should a variation of the detail be required, the Contractor shall submit a Request for Information (RFI) with a sketch of the proposed variation to the Engineers or Owner for approval prior to installation of the instrument.
3. Contractor shall determine the type and quantity of instrument stands required for the application and location based on instrument location drawings and installation details.
4. The Contractor shall provide all mounting hardware for field instrument items.

5. Pipe for instruments to be mounted on pipe stands shall be 2-inch Schedule 40 galvanized carbon steel pipe.
   a. Sides of the baseplate of the pipe stand shall be a minimum of 8 inches and manufactured of galvanized steel with a thickness not less than 3/8 inch.
   b. The pipe stands shall be of all-welded construction. Supporting and mounting hardware shall be stainless steel.
6. Instruments shall be accessible for maintenance without the use of ladders taller than 6 feet, scaffolding, or portable man lift equipment such as a cherry picker.
7. Instruments shall be piped and/or tubed with sufficient clearance for removal of the instrument for service.
8. Where practical, the centerline of an instrument mounted at grade or on a platform shall be 4 feet 6 inches above grade or platform.
9. Instruments shall not be mounted on handrails, ladders, in pathways, or on pipe or equipment that is subject to vibration.
10. Instrument mounts shall not be welded to process lines, vessels or equipment.
11. All root valves shall be furnished and located by Piping Contractor. All other hand valves required by instrument installation details shall be located by Contractor in accessible locations for operation and maintenance.
12. Thermowells shall be clear of all foreign materials prior to installation of the thermal sensitive elements.
13. If any filled temperature and/or pressure capillary systems are required, the Contractor shall support and protect the capillary with steel channel or tube tray. Excess capillary shall be coiled and protected at the instrument.
14. Capillary shall be shielded from the sun and from nearby heat sources so that the reading shall not be influenced by ambient conditions.
15. If any armored cable is required, the cable shall be supported in steel channel and excess cable shall be neatly coiled and secured.

16. The following table shall be used for determining required accessibility of instruments:
   a. Type 1: Grade, platform or stairway.
   b. Type 2: Grade only.
   c. Type 3: Grade, platform, stairway, permanent ladder or portable ladder.

Type of Instrument	Access Type Required
Transmitter	1
Local indicator	1
Pressure gauge	3
Thermowells	3
Self-contained regulators	1
Local controllers	1

Type of Instrument	Access Type Required
Process actuated switches	3
Frequently monitored or adjusted instruments	1
Emergency instruments	2
Thermocouples and RTDs	3

H. Instrument Calibration:

1. All instruments shall meet the manufacturer's published specifications. Instruments that do not satisfy the manufacturer's specifications shall be repaired or returned to the manufacturer.
2. The manufacturer's recommended calibration procedures shall be followed for all instrument calibration when needed. The Contractor shall record all calibration data on a "calibration" sheet. For instruments received with factory Certified Calibration Reports, Contractor shall verify calibration of these devices. In general, instrumentation received with factory Certified Calibration Reports do not need further calibration unless instrument is to be used for performance testing (or other special purposes requiring immediate calibration) and factory calibration occurred more than 6 months prior to the performance test.
3. Test instruments shall be NIST traceable and provided by the Contractor with equal or better accuracy as noted below:

Inclined water manometer	0.1% full scale
Dead weight tester	0.1% full scale
Precision pressure gauge	0.25% full scale
Digital voltmeter	0.1% full scale
Current and/or voltage meter	0.25% full scale
Precision potentiometer	0.3% full scale
Precision temp potentiometer	0.3% full scale
Precision resistor decade box	0.1% full scale
Stopwatch	0.1 seconds

4. The Contractor shall confirm that all instruments comply with the instrument index, instrument datasheets and manufacturer documentation. Items to be checked include but are not limited to the following:
   a. Instrument tag number.
   b. Model number and serial number.
   c. Size and Connection type.
   d. Materials of Construction.
   e. Instrument ranges and setpoints.
   f. Thermowell lengths.
   g. Thermocouple and RTD types.

5. Control Valves and self-contained pressure regulators shall be inspected to verify against the Datasheets the following as a minimum:
   a. Valve body and trim materials of construction.
   b. Valve body size and type.
   c. Valve end connection size and type.
   d. Valve action and fail position.
   e. Valve stroke time (for fast operating valves).
   f. Valve actuator, accessories and position switches or transmitter (when supplied).
   g. Valve shall be checked to ensure that it seats properly when the appropriate bench set pressure is applied to the actuator.

I. Instrument Locations:

1. Field instrument location plan drawings have been prepared by the Engineers. These Drawings have been provided for the Contractor to use as a guideline for locating instruments. It is the Contractor's responsibility to determine the most appropriate location for the instruments based on the final configuration and location of equipment.
2. Instruments are to be located with attention given to instrument accessibility for maintenance purposes and personnel safety.
3. The final installed locations of the instruments shall be documented by the Contractor with the Contractor providing final marked up "record" location plans to the Engineers or Owner.

J. Instrument Installation:

1. Field instruments shall be installed as required or recommended by ISA-70.70 standard, ASME PTC-19.2, PTC-9.3, PTC-19.5, and PTC-46.
2. Instruments shall be accessible for maintenance without the use of ladders taller than 6 feet, scaffolding, or portable man lift equipment such as a cherry picker. Tubing run from the tubing supply valve to the instrument shall be as short as possible. Instruments shall be line-mounted, rack-mounted or stand-mounted. No instruments shall be mounted on handrails. Instrument racks and stands shall be mounted directly on structural steel or on concrete.
3. Pipe-mounted pressure gauges shall be provided with siphons, as required, for steam service, pulsation dampeners for pulsating flow, and diaphragm seals for corrosive or severe service.
4. Pressure type instruments shall have associated isolation and test valves or combination two valve insulation/test manifolds. Differential pressure type instruments shall have associated pairs of isolation and equalizing valves or a five-valve isolation/equalizing manifold. Pressure transmitters and differential pressure transmitters shall be directly mounted to the manifold. Diaphragm seals shall be provided for corrosive or severe service.

5. Sensing elements shall be located with adequate clearance for removal and replacement. Taps on process lines shall take into account requirements for venting and draining. In order to prevent plugging, no taps shall be located on the bottom of pipes. Instrument taps shall be mounted either on the side or top of pipes as required. Installation and routing of sensing lines shall take into account requirements for blowdown or back flushing of lines.
6. Typical instrument installation detail drawings shall be provided by the Engineers to define how the instruments shall be installed by Contractor.
7. Installation and routing of sensing lines shall take into account requirements for thermal expansion of the tubing under normal process conditions.
8. Instrument tubing shall be insulated as required, in accordance with Project piping insulation specifications.

K. Installation Check-Out:

1. All instruments and accessories shall be visually inspected for damage after installation. If damage is observed, corrective action shall be initiated.
2. All instruments shall be free of shipping restraints and stops. Glass shall be clean. Temporary protective devices shall be removed prior to placing instruments in service.
3. Verify that all instruments and instrument tubing are correctly tagged, labeled, and installed at the correct location and orientation.
4. All primary elements shall be checked for proper installation with respect to direction of flow, elevation, orientation, insertion depth of thermowells, or any other applicable considerations.
5. Instrument electrical wiring shall be checked for proper termination and labels.
6. Instrument piping and/or tubing which is process-connected shall be checked for fitting type materials, connection sizes and rating. Verify that adequate brackets and supports have been used to maintain continuity of rigid construction.
7. On installations which involve instrument seal pots or reference (wet) legs, the system shall be filled. All seal/fill fluids shall be supplied by the Contractor.
8. Verify that the air supply for each instrument is correctly installed.
9. All tubing connections shall be checked per manufacturer's recommendation. Over-tightened connections shall be replaced. Tubing with scars from a tube cutter or knife used to remove the sheathing shall be replaced.
10. Do not install primary in-line elements until the process line has been flushed clean.

11. In general, for in-line elements in piping subject to steam blows, do not install the element until after steam blows. If the in-line instrument must be installed before steam blows, such as for welded thermowells in critical pipe spools, then the instrument shall be designed to withstand the highest expected velocity without damage or fatigue, even if such velocities are infrequent or of short duration. If the in-line instrument is removable, such as orifice plate or threaded/flanged thermowell, it may be installed before steam blows as long as it is removed for steam blows and associated pipe taps are capped or plugged.
    a. All transmitters shall be isolated from the process lines and vented to atmosphere for overpressure protection during flushing and steam blows.

L. Rotameters:

1. Mount rotameters vertically. Vertical alignment shall be verified.
2. Verify that rotameter float and follower can travel full range.

M. Orifice Meters:

1. Inspect orifice plate for correct tag number, line size, bore size, plate thickness and material, inlet side correctly identified, and when applicable, drain and vent holes size and location and eccentric bore orientation.
2. Inspect for nicks, burrs, wire edges, or other defects that would affect measurement accuracy.
3. Orifice plates in pipes subject to steam blows, compressed air cleaning, or other high velocity cleaning are removed prior to steam blows/cleaning to ensure orifice plates are not damaged.
4. Install orifice plate in the correct orientation in accordance with ASME PTC 19.5 paragraph 4-5.5 and manufacturer labelling. Typically, this shall be with the beveled side facing downstream and square edge facing upstream.
5. Orifice plates on horizontal runs of pipe are installed so that the orifice plate can be removed vertically.
6. Locate differential pressure flowmeters for liquid or steam and condensable vapor service below orifice flanges. Verify that associated impulse piping/tubing is sloped continuously downward from flange taps to flowmeter. Verify correct installation of condensate pots or wet leg fill connections. Verify wet legs are filled.
7. Locate flowmeters in gas service above the orifice flanges. Verify that associated impulse piping/tubing is sloped continuously upward from flange taps to flowmeter.

8. Instrument Contractor and Piping Contractor shall verify that the proper straight runs of pipe both upstream and downstream of the orifice have been correctly installed.
9. Verify that associated piping/tubing is sloped in proper direction. Minimum slope is 1/2 inch per foot.
10. Differential pressure instrument shall be located as close as possible to the sensing point. Verify that the instrument is installed correctly.
11. Verify high and low pressure connections are piped correctly for direction of flow.

N. In-Line and Insertion type flowmeters:

1. Verify that the flowmeter is installed and grounded in accordance to manufacturer's instructions.
2. A startup strainer shall be provided for all insertion type meters (vortex, turbine, positive displacement, etc.) to prevent fouling the meter during startup and commissioning. Strainer shall be removed before normal plant operations begin.
3. Flow transmitters that are not integral to the element shall be mounted as close as possible to the flow element.
4. In-line and insertion type flowmeters in pipes subject to steam blow shall not be installed until after steam blow.
5. Follow installation detail for the instrument.

O. Magnetic Flowmeters:

1. Verify that the flow direction through the meter is compatible with the orientation of the sensing element and that the meter shall always be full of liquid.
2. Verify that the wiring connection and grounds are correct.

P. Temperature Instruments:

1. Thermowells shall be of the welded, threaded or flanged type as shown on the Piping ISO's and instrument datasheets. Verify that thermowell material type and material match instrument datasheets and comply with the Project piping Specifications.
2. Verify thermocouple or RTD type against instrument index and datasheets.
3. For weld-in and socket weld style thermowells, ensure temperature sensor is removed before welding the well into the pipe or socket.
4. Thermowells shall be installed prior to hydrotesting or leak testing, except for welded thermowells in lines subject to steam blows.
5. In general, welded thermowells in pipes subject to steam blows, compressed air blows, or other high velocity cleaning shall not be installed until after steam blows/cleaning, so that well and weld is not damaged by flows exceeding wake frequency. If thermowells must be

installed before steam blows, such as for welded thermowells in critical pipe spools, then the Contractor shall verify that the thermowell has been designed to withstand the highest expected velocity without damage or fatigue.

6. Threaded or flanged thermowells in pipes subject to steam blows, compressed air blows, or other high velocity cleaning may be installed before steam blows/cleaning, but shall be removed for steam blows/cleaning to prevent damage from flows exceeding wake frequency.
7. Ensure temperature sensors such as thermometers, thermocouples and resistance temperature detectors are installed in their respective thermowells. Ensure thermowell bore is clean and dry before inserting the sensor.
8. Verify that the temperature sensor is in proper contact with the bottom of the thermowell.
9. Hermetically sealed, bimetallic thermometers shall be located to be readable from grade or from a working platform.
10. Bulb and capillary style temperature instruments shall have capillary supported and protected with steel channel or tube tray. Excess capillary shall be coiled and protected at the instrument. Capillary shall be shielded from the sun and from nearby heat sources so that the reading shall not be influenced by ambient conditions.

Q. Level Instruments:

1. Level instrument installations shall be designed and installed to be readable and to permit maintenance from grade or platform. Block and drain valves shall be accessible.
2. All gauge glasses in process and utility service shall be reflex or transparent. Gauge glasses shall be installed on vessels on connections separate from any other instrumentation. Transparent gauges shall be provided with illumination.
3. All differential pressure type level instruments shall be installed with isolating gauge valves. Vents and drains shall be provided according to service.
4. Differential pressure type level instruments shall be located as close as possible to the sensing point. Contractor shall check to verify that each leg of the transmitter is filled with the proper fluid, if applicable, and that high- and low-pressure connections are connected correctly.
5. Float or Displacement Type Level Switches:
    a. Verify that the specific gravity setting is correct.
    b. Verify that the displacer is plumb and manually check for freedom of movement.
6. Magnetic Level Gauges:
    a. Examine for orientation and visibility.
    b. If gauge cocks, vent valves or drain valves have been specified, verify that they are properly installed.

c. Note proper orientation of horizontal ball check block valves, if applicable.
d. Verify and adjust the flag assembly and gauge board to provide the best possible visibility.

7. Guided Wave Radar Type Level Transmitters:
   a. Verify that the level probe is installed correctly per the manufacturer's instructions and installation details provided by the Engineers.
   b. Verify proper alignment with the guides or stilling well and that "swinging" is not possible.
   c. Verify that a sufficient number of holes have been correctly made in the stilling wells to allow for air to escape and not block the fluid from traveling up the stilling well.

R. Pressure Instruments:

1. Pressure gauges shall be installed directly on the line or equipment they are servicing except where vibration will impair operation, or where process conditions will exceed gauge ratings, and then they shall be mounted remotely. All other types of pressure instruments shall be mounted on separate brackets in the vicinity of the root valve.
2. Pressure gauges in condensing vapor service shall be mounted above the process taps and installed with siphons or pigtails.
3. Pressure gauges or liquid filled gauges on services that surge shall have pulsation dampeners.
4. Pressure gauges shall be readable from grade or from a platform.
5. Verify piping/tubing is sloped in proper direction. Minimum slope is 1/2 inch per foot.
6. Verify instrument and valve manifold have been installed properly (no ball checks).

S. Control Valves:

1. Contractor shall inspect each valve prior to installation and notify the Engineers or Owner if any suspected damage is evident. Contractor shall verify the following: that the valves were shipped upright to prevent damage to the internal parts; that there is no damage to the inlet/outlet flanges; that inlet/outlet ports and other openings were covered during shipment and storage to keep the internals clean; and that the bonnet vents are clear of obstruction.
2. Solenoid valves, where required, shall be installed between the positioner and actuator.
3. All control valves shall be accessible from grade or platform. Sufficient space shall be provided to permit actuator removal and valve assembly removal for maintenance.
4. Verify that all control valves are installed correctly with respect to direction of flow.
5. Verify that all accessories have been included and are functional.

6. During hydrostatic testing and line flushing, control valves shall be removed or "blinded off" from the line during testing and flushing. Block valves may be left in the line, but precautions shall be taken to ensure that the block valve trim is not damaged by foreign material in the line.
7. On self-contained pressure regulators, verify that external pressure sensing piping, when required, is correctly installed.
8. All new control valves data sheets specify each control valve complete with actuator, positioner, I/P converter and filter/regulator completely assembled requiring only interconnecting electrical signals and air supply for operation. Provide and install all required components and interconnecting wiring and pneumatic tubing.

T. Pressure Safety/Relief Valves: Contractor shall inspect each relief valve prior to installation and notify the Engineers or Owner if any suspected damage is evident. Contractor shall verify the following: that the valves were shipped upright to prevent damage to the internal parts; that there is no damage to the inlet/outlet flanges; that inlet/outlet ports and other openings were covered during shipment and storage to keep the internals clean; and that the bonnet vents are clear of obstruction.

U. Instrument Air Supply:

1. Route, install, support, connect and test all instrument air piping and tubing from the instrument air piping header block valve to all instruments and control valves that require an air source.
2. The instrument air tubing shall be installed with as few joints or connections as possible. Tubing shall be reamed of burrs and cleaned of scale, dirt, oil and chips. Unions shall be provided as required. Keep threaded connections to a minimum by using bends on process tubing.
3. Each instrument air user shall have a shut-off valve installed at the end-user in such a manner as to allow the instrument to be removed without removing the valve. Each secondary branch header shall be supplied with a block valve located at its take-off point from the main header. Secondary branch headers, not supplied by piping, shall be supplied by the Contractor if the Engineers determine they are required for proper air distribution.
4. Instrument air supply, main headers and air stations shall be fabricated such that subheader branches shall come from the top of the pipe, wherever possible.
5. All headers, subheaders, branch headers and air station piping shall be sloped to a 1/2-inch drain valve located at the low points and at the end of the header.
6. The Contractor is responsible for routing air supply lines in such as manner as to avoid obstruction of the operation, maintenance or removal of equipment, instruments, panels, and overhead cranes. Walkways, platforms, ladders and stairs shall not be obstructed in any manner.

7. Instrument Air Piping and Tubing Testing:
    a. Clean and pressure test all instrument air tubing and piping.
    b. Blow all instrument air piping or tubing clean and test for leaks using clean dry instrument air or nitrogen. No water shall be used. Test pressure shall be 75 psig or 1.5 times working pressure (whichever is greater), and care shall be taken to make certain no instruments, controls or miscellaneous devices are connected. Systems shall only be acceptable that exhibit a zero-leakage test using a bubbler or test gauge. Where leaks do exist, location shall be determined using commercially compounded solutions specifically for the test medium used. The Contractor shall correct all problems discovered during testing and then shall retest the section in question to verify that the problem has been corrected.
    c. Maintain an accurate log and documentation of all cleaning and acceptable pressure tests. Turn over log and test documentation to Owner upon completion.
    d. After testing, the Contractor shall be certain all root valves are closed. All instrument shutoff valves and manifolds shall be shut, and bypass valves opened. Blowdown valves shall be open. Instrument air supply valves shall be closed and the vents on the filter/regulators opened. With this complete, all connections shall be made to instruments, controls, and miscellaneous devices.
    e. The air supply from the valve station to each individual instrument shall be disconnected and blown down before initial admission of instrument air to any instrument.

V. Instrument Process, Control, and Air Piping and Tubing:

1. Tubing, valves and fittings shall be installed by the Contractor in accordance with the instrument installation details.
2. Contractor shall furnish, route, install, support, connect and test all tubing, piping, fittings, and isolation valves from the root valves to the locally mounted instruments.
3. Tubing, valves and fittings shall conform to applicable piping material Specifications.
4. Valves and Manifolds:
    a. Install instrument with manifold directly mated to it (typically instrument is provided factory-installed on the manifold). If manifold cannot be directly mated to instrument, install adjacent to instrument as close as possible.
    b. Support manifolds and valves in tubing runs independently of the tubing.
5. Pneumatic and Process Signal Tubing Installation.
6. Tubing shall be straight, securely fastened, and neatly arranged to facilitate insulation and troubleshooting.

7. Relieve strain on all connections by properly supporting all tubing, piping, pots, leads and instruments.
8. Process and pneumatic single tubing runs of less than 20 feet may be strapped to adjacent pipe or clamped to structural beams. No more than two tubing runs shall be run on a pipe. Tubing runs of less than 20 feet shall be supported every 3 feet of running length.
9. All other tubing and tubing bundles shall be run neatly in tube trays, steel channel, or raceways, and shall be securely fastened. Tray, channel and raceway shall be supported from structural members at intervals not more than 10 feet.
10. Commercial one-tube and two-tube tubing clips and 2-piece tube clamps may be used. All tube clips, supports, or clamps shall be removable and replaceable without cutting or burning. Tube clip supports and clamps shall be cadmium plated steel, insulated to prevent galvanic action.
11. No clip or support shall be within 12 inches of the final connection and the final connection shall be piped or tubed so that it can be disconnected from the instrument without bending the tubing or without removing or slackening the clips or supports. On high pressure systems, a clip or support shall be located within 6 inches of the final connection to prevent excessive tube “whiplash” should a connection fail.
12. Instrument process and air tubing shall not be run in electrical cable trays.
13. Raceway, tube-tray, or tubing may be strapped from the process piping, if free of vibration and if no interferences or excessive heating would be caused. Straps shall not damage or interfere with process piping insulation or heat tracing.
14. Do not route tubing through areas where a high risk of fire or mechanical damage exists (such as over vessels, compressors, or pumps).
15. Route tubing to avoid removal of the tubing when maintenance or repair of equipment is required.
16. Tubing shall be square cut using tube cutters. All ends shall be reamed to full tube inside diameter. Burrs shall be removed from each cut.
17. Tubing bends, if required, shall be 90 degrees.
18. All single metal tube bends shall be made with a tube bender. Manufacturer’s recommendations for bend radius and installation of tubing bundles and traced tubing shall be followed.
19. All tubing bends and straight sections shall be free of wrinkles, creases, flattening, sags and bows.
20. The number of tubing connections and bends shall be minimized.
21. Keep threaded connections to a minimum by using bends on tubing. If threads shall be used, they shall be cut with the proper die for the particular application according to the manufacturer’s instructions.
22. Instrument piping shall be arranged to avoid measurement error caused by condensate build-up in gas service, air entrapment in liquid service,

or overheating of the instrument in hot fluid service. To this end, the process signal tubing of pressure and differential pressure instruments shall be sloped in accordance with the instrument installation details and free of pockets. Minimum slope is 1/2 inch per foot.

23. Tubing runs requiring the use of unions shall have the tubing bent to lift the union from the tray for ease of inspection and maintenance.
24. Stagger offsets for unions and tees on parallel tubing runs.
25. Use elbow fittings instead of straight fittings for tubing bends; branch or street tees instead of connectors with all tube tees; and properly sized tubing fittings to match pipe connections instead of bushings or swages.
26. Changes of direction in tubing installations shall be accomplished by forming radius bends in the tubing, whereas changes in direction in piping installations shall be accomplished by fittings (90-degree elbows, etc.).
27. Instrument piping that requires periodic cleaning to prevent plugging shall be reviewed by the Engineers before installation begins.
28. No tubing runs shall be laid one on top of another. Wherever possible, tube runs shall be laid out avoiding crossing one tube over another. Where this is unavoidable, clearance shall be provided to prevent chafing and allow for maintenance.
29. Process tubing runs between the instrument and the block valve to the process shall be as short as possible.
30. Routing of tubing in potentially hot areas shall be avoided.
31. Make tubing runs 20 feet or shorter with stick tubing.
32. Multi-tube bundles shall not be buried, but may be run through conduit, laid in trays, or strapped to Unistrut parallel to electrical conduit.
33. Tubing Fittings:
    a. Do not install fittings with galled or deformed threads.
    b. The sealer/lubricant for stainless steel to stainless steel National Pipe Thread (NPT) fittings shall be tetrafluoroethylene (TFE) paste. The sealer/lubricant for all other combinations of material shall be TFE paste or TFE tape.
    c. Use anti-gall compounds approved by the tubing manufacturer on threads of tube fittings.
    d. Do not exceed temperature rating of anti-gall compound.
    e. Tighten tube fittings in accordance with manufacturer’s instructions.
34. Tubing Trays or Channels:
    a. Ensure installed tubing trays shall not present a hazard to personnel, block access ways, or prevent passage of equipment.
    b. Support horizontal and vertical runs of tubing trays at intervals not exceeding 10 feet.
    c. Support three or more tubing lines with tubing trays or channels.

35. Tubing Labeling:
    a. Each entry or exit of tubing from a panel or junction box shall be identified at the bulkhead with a label stating the instrument to which it connects.
    b. Differential pressure instrument tubing shall be identified by “H” for “high” or “L” for low.

W. Instrument Enclosures: Instruments with housings that are not appropriately NEMA rated (for example, a pressure switch with exposed wiring terminals) shall be installed in an enclosure of the required NEMA rating for the location. The enclosure shall have a nameplate with the instrument tag name.

X. SCADA Workstations, Network cabinets and Miscellaneous Data Links:

1. Install all workstations as shown on block diagrams and location plans.
2. Install, terminate, and test all supervisory network and other data links as shown on the block diagrams. Any data links going outside the buildings and greater than 100 meters in lengths shall be fiber optic links furnished with all required media converters, patch panels and connectors.
3. Install all dedicated data links between the SCADA network and miscellaneous existing equipment as shown on the block diagrams and specified in the following Specification sections: LATER.

Y. Instrument Electrical:

1. General:
    a. Electrical wiring and equipment shall be installed in accordance with the Project electrical Specifications.
    b. Instrument control signal cables and electrical power cables shall only cross at right angles.
    c. Care shall be taken in the layout of terminals and in the wiring method used to prevent contact between circuits if a wire becomes disconnected.
    d. 24V dc control wiring shall not be installed in the same tray, channel or raceway with 120V ac or higher electrical power wiring.
    e. Separate parallel runs of 24V dc control signal cables and electrical power cables by a minimum space equal to 1 percent of the length of the run. The separation shall be limited to a minimum of 2 feet.
    f. No splices or wire nuts are permitted in the control wiring.

2. Enclosures:
    a. Instrument enclosures in hazardous areas shall be provided with electrical hazardous area reduction (purging) that follows the requirements of NFPA 496.

b. Bottom entry is preferred. Side entry is permitted if bottom entry is impractical. No top entry is permitted under any circumstances.

Z. Loop Checkout:

1. Loop checks (checking for wiring continuity, polarity, and instrument functionality) shall be performed by Contractor on all instrumentation and wiring, including skid-mounted equipment.
2. A complete checkout report for the complete loop as opposed to individual loop segments shall be submitted to Owner.

2.10 I&C Components:

A. Specifications: Refer to Section 40 91 00, Instrumentation and Control Components, for Specifications for I&C components.

2.11 SUPPLEMENTS

A. The supplements listed below, following "End of Section," are part of this Specification.

1. Instrument Calibration Sheet.
2. Instrument Calibration Sheet Example.
3. I&C Valve Adjustment Sheet.
4. I&C Valve Adjustment Sheet Example.
5. Performance Acceptance Test Sheet.
6. Performance Acceptance Text Sheet Example.
7. Loop Status Report Example.

PART 3 EXECUTION (NOT USED)

END OF SECTION

INTENTIONALLY LEFT BLANK

JACOBS **INSTRUMENT CALIBRATION SHEET** Rev.06.05.92

COMPONENT	**MANUFACTURER**	**PROJECT**
Code:	Name:	Number:
Name:	Model:	Name:
	Serial #:	

FUNCTIONS

	RANGE	VALUE	UNITS	COMPUTING FUNCTIONS? Y / N	CONTROL? Y / N
Indicate? Y / N	Chart:			Describe:	Action? direct / reverse
					Modes? P / I / D
Record? Y / N	Scale:				SWITCH? Y / N
					Unit Range:
Transmit/	Input:				Differential: fixed/adjustable
Convert? Y / N	Output:				Reset? automatic / manual

ANALOG CALIBRATIONS							**DISCRETE CALIBRATIONS**					
REQUIRED			AS CALIBRATED				REQUIRED			AS CALIBRATED		
			Increasing Input		Decreasing Input		Number	Trip Point	Reset Pt.	Trip Point	Reset Pt.	Note
Input	Indicated	Output	Indicated	Output	Indicated	Output		(note rising or falling)		(note rising or falling)		No.
							1.					
							2.					
							3.					
							4.					
							5.					
							6.					
CONTROL MODE SETTINGS:			P:	I:	D:		7.					

#	**NOTES:**	**Component Calibrated and Ready for Startup**
		By:
		Date:
		Tag No.:

INTENTIONALLY LEFT BLANK

JACOBS **INSTRUMENT CALIBRATION SHEET** Rev.06.05.92

EXAMPLE - ANALYZER/TRANSMITTER

COMPONENT	**MANUFACTURER**	**PROJECT**
Code: *A7*	Name: *Leeds & Northrup*	Number: *WDC30715.B2*
Name: *pH Element & Analyzer/Transmitter*	Model: *12429-3-2-1-7*	Name: *UOSA AWT PHASE 3*
	Serial #: *11553322*	

FUNCTIONS

	RANGE	VALUE	UNITS	COMPUTING FUNCTIONS? N	CONTROL? N Action? direct / reverse Modes? P / I / D
Indicate? Y Record? N	Chart:			Describe:	
	Scale:	*1-14*	*pH units*		SWITCH? N Unit Range:
Transmit/	Input:	*1-14*	*pH units*		Differential: fixed/adjustable
Convert? Y	Output:	*4-20*	*mA dc*		Reset? automatic / manual

ANALOG CALIBRATIONS

REQUIRED			AS CALIBRATED			
			Increasing Input		Decreasing Input	
Input	Indicated	Output	Indicated	Output	Indicated	Output
1.0	*1.0*	*4.0*	*1.0*	*4.0*	*1.0*	*3.9*
2.3	*2.3*	*5.6*	*2.2*	*5.5*	*2.3*	*5.6*
7.5	*7.5*	*12.0*	*7.5*	*11.9*	*7.5*	*12.0*
12.7	*12.7*	*18.4*	*12.7*	*18.3*	*12.6*	*18.3*
14.0	*14.0*	*20.0*	*14.0*	*20.0*	*14.0*	*20.0*
CONTROL MODE SETTINGS:			P: *N.A.*	I:	D:	

DISCRETE CALIBRATIONS

REQUIRED			AS CALIBRATED		
Number	Trip Point (note rising or falling)	Reset Pt.	Trip Point (note rising or falling)	Reset Pt.	**Note No.**
1.	*N.A.*		*N.A.*		
2.					*1.*
3.					
4.					
5.					
6.					
7.					

#	**NOTES:**
	1. Need to recheck low pH calibration solutions.

Component Calibrated and Ready for Startup

By: *J.D. Sewell*

Date: *Jun-6-92*

Tag No.: AIT-12-6[pH]

INTENTIONALLY LEFT BLANK

JACOBS **I&C VALVE ADJUSTMENT SHEET**

Rev.06.05.92

PARTS	Project Name:	Project Number:
Body	Type:	Mfr:
	Size:	Model:
	Line Connection:	Serial #:
Operator	Type:	Mfr:
	Action:	Model:
	Travel:	Serial #:
Positioner	Input Signal:	Mfr:
	Action:	Model:
	Cam:	Serial #:
Pilot Solenoid	Action:	Mfr:
	Rating:	Model:
		Serial #:
I/P Converter	Input:	Mfr:
	Output:	Model:
	Action:	Serial #:
Position Switch	Settings:	Mfr:
	Contacts:	Model:
		Serial #:
Power Supply	Type:	Air Set Mfr:
	Potential:	Model:
		Serial #:

ADJUSTMENTS	Initial	Date	**VERIFICATION**	Initial	Date
Air Set			Valve Action		
Positioner			Installation		
Position Switches			Wire Connection		
I/P Converter			Tube Connection		
Actual Speed					

REMARKS:	**Valve Ready for Startup**
	By:
	Date:
	Tag No.:

INTENTIONALLY LEFT BLANK

JACOBS **I&C VALVE ADJUSTMENT SHEET** Rev.06.05.92

EXAMPLE

PARTS	Project Name: *SFO SEWPCP*	Project Number: *SFO10145.G2*
Body	Type: *Vee-Ball*	Mfr: *Fisher Controls*
	Size: *4-inch*	Model: *1049763-2*
	Line Connection: *159 # ANSI Flanges*	Serial #: *1003220*
Operator	Type: *Pneumatic Diaphragm*	Mfr: *Fisher Controls*
	Action: *Linear - Modulated*	Model: *4060D*
	Travel: *3-inch*	Serial #: *2007330*
Positioner	Input Signal: *3-15 psi*	Mfr: *Fisher Controls*
	Action: *Direct - air to open*	Model: *20472T*
	Cam: *Equal percentage*	Serial #: *102010*
Pilot Solenoid	Action:	Mfr:
	Rating: *None*	Model:
		Serial #:
I/P Converter	Input: *4-20 mA dc*	Mfr: *Taylor*
	Output: *3-15 psi*	Model: *10-T-576-3*
	Action: *Direct*	Serial #: *1057-330*
Position Switch	Settings: *Closed / Open 5 deg, rising*	Mfr: *National Switch*
	Contacts: *Close / Close*	Model: *1049-67-3*
		Serial #: *156 &157*
Power Supply	Type: *Pneumatic*	Air Set Mfr: *Air Products*
	Potential: *40 psi*	Model: *3210D*
		Serial #: *1107063*

ADJUSTMENTS	Initial	Date	**VERIFICATION**	Initial	Date
Air Set	*JDS*	*Jun-06-92*	Valve Action	*JDS*	*JuN-001-92*
Positioner	*JDS*	*Jun-06-92*	Installation	*JDS*	*JuN-001-92*
Position Switches	*JDS*	*Jun-06-92*	Wire Connection	*JDS*	*JuN-001-92*
I/P Converter	*JDS*	*Jun-07-92*	Tube Connection	*JDS*	*JuN-001-92*
Actual Speed	*JDS*	*Jun-07-92*			

REMARKS: *Valve was initially installed backwards.*	**Valve Ready for Startup**
Observed to be correctly installed May-25-92	By: *J.D. Sewell*
	Date: *Jun-07-92*
	Tag No.: *FCV-10-2-1*

INTENTIONALLY LEFT BLANK

JACOBS **PERFORMANCE ACCEPTANCE TEST SHEET** Rev.06.05.92

Project Name:	Project No.:
Demonstration Test(s): For each functional requirement of the loop: (a) List and number the requirement. (b) Briefly describe the demonstration test. (c) Cite the results that will verify the required performance. (d) Provide space for signoff.	

Forms/Sheets Verified	By	Date	**Loop Accepted By Owner**
Loop Status Report			By:
Instrument Calibration Sheet			Date:
I&C Valve Calibration Sheet			
Performance Acceptance Test	By	Date	
Performed			
Witnessed			Loop No.:

INTENTIONALLY LEFT BLANK

JACOBS **PERFORMANCE ACCEPTANCE TEST SHEET** Rev.06.05.92

EXAMPLE

Project Name: *SFO SEWPCP Plant Expansion*	Project No.: *SFO12345.C1*

Demonstration Test(s): For each functional requirement of the loop:
(a) List and number the requirement. (b) Briefly describe the demonstration test.
(c) Cite the results that will verify the required performance. (d) Provide space for signoff.

1. MEASURE EFFLUENT FLOW

1.a With no flow, water level over weir shall be zero and

FIT indicator shall read zero. Jun-20-92 BDG

2. FLOW INDICATION AND TRANSMISSION TO LP & CCS

With flow, water level and FIT indicator shall be related by expression

*Q(MGD) = 429*H**(2/3) (H = height in inches of water over weir).*

Vary H and observe that following.

2.a Reading of FIT indicator. Jun-6-92 BDG

2.b Reading is transmitted to FI on LP-521-1. Jun-6-92 BDG

2.c Reading is transmitted and displayed to CCS. Jun-6-92 BDG

H(measured)	*0*	*5*	*10*	*15*
Q(computed)	*0*	*47.96*	*135.7*	*251.7*
Q(FIT indicator)	*0*	*48.1*	*137*	*253*
Q(LI on LP-521-1)	*0*	*48.2*	*138*	*254*
Q(display by CCS)	*0*	*48.1*	*136.2*	*252.4*

Forms/Sheets Verified	By	Date	**Loop Accepted By Owner**
Loop Status Report	*J.D. Sewell*	*May-18-92*	By: *J.D. Smith*
Instrument Calibration Sheet	*J.D. Sewell*	*May-18-92*	Date: *Jun-6-92*
I&C Valve Calibration Sheet	*N.A.*		
Performance Acceptance Test	By	Date	
Performed	*J. Blow MPSDC Co.*	*Jun-6-92*	
Witnessed	*B.deGlanville*	*Jun-6-92*	Loop No.: *30-12*

INTENTIONALLY LEFT BLANK

JACOBS LOOP STATUS REPORT – EXAMPLE FORMAT Rev.06.05.92

Project Name: *Newport News WTP*	Project No. *WDC23456.C1*
FUNCTIONAL REQUIREMENTS:	
1. Measure, locally indicate, and transmit RAS flow to LP-10.	
2. At LP-10 indicate flow and provide flow control by modulation of FCV-10-2.	
3. Provide high RAS flow alarm on LP-10.	

COMPONENT STATUS (Check and initial each item when complete)

Tag Number	Delivered	Tag ID Checked	Installation	Termination Wiring	Termination Tubing	Calibration	
FE/FIT-10-2	*Jan-12-90 DWM*	*Jan-12-90 DWM*	*Feb-7-90 DWM*	*Mar-5-90 DWM*	*N.A.*	*May-6-90 VDA*	
FIC-10-2	*Jan-12-90 DWM*	*Jan-12-90 DWM*	*Mar-5-90 DWM*	*Apr-4-90 DWM*		*May-4-90 VDA*	
FSH-10-2	*Jan-12-90 DWM*	*Jan-12-90 DWM*	*Mar-5-90 DWM*	*Apr-4-90 DWM*		*May-7-90 VDA*	
FAH-10-2	*Jan-12-90 DWM*	*Jan-12-90 DWM*	*Mar-5-90 DWM*	*Apr-4-90 DWM*		*May-7-90 VDA*	
FCV-10-2	*Mar-2-90 DWM*	*Mar-2-90 DWM*	*Apr-20-90 DWM*	*Apr-30-90 DWM*		*May-16-90 VDA*	

REMARKS: None.			
Loop Ready for Operation	By: *D.W. Munzer*	Date: *May-18-90*	Loop No.: *10-2*

INTENTIONALLY LEFT BLANK

SECTION 40 90 10
INSTRUMENTATION AND CONTROL SUMMARY OF WORK

PART 1 GENERAL

1.01 INSTRUMENTATION AND CONTROLS

A. The design and supply of fiber optic equipment necessary to ensure full network installation in support of the Fuel Oil Forwarding Pumps and Fuel Oil Return Pumps shall be provided by the Contract 1444 Installer. The various principal elements of the I&C Work by the 1444 Installer include the following items categorized as the 1444 Installation and Interconnection:

1. Equipment supply as noted on the Drawings and Specifications.
2. Ductbank for routing of fiber cables is defined in the Electrical Drawings.
3. Refer to the following drawings for fiber optic installations: IC001_D3393001, IC100_D3393001, , IC700_D3393001, IC702_D3393001, IC711_D3393001. IC712_D3393001 IC712_D3393001 IC713_D3393001 IC714_D3393001 IC715_D3393001.
4. Fiber Optic Cable requirements are defined in Section 27 15 23, Communications Optical Fiber Horizontal Cabling.
5. Copper network cable requirements are defined in Section 27 15 13, Communications Copper Horizontal Cabling.
6. Networking cabinet requirements are defined in Section 40 95 33, Process Control Network.
7. The Balance of Plant Process SCADA System including the HMI, Servers, networking, graphics, programming to control the fuel oil pump systems, monitoring of the leak detection system, as described in Section 40 94 24, PSS Human Machine Interface and Section 40 94 23, Balance of Plant Control System.
8. Contractor shall be responsible for adding a selected number of Ignition points (20 points estimated) and tags to the SWBNO GE/Proficy Historian and then transferring those tags into the Existing Pi Historian. Note that any license upgrades to the GE Proficy or PI Historian necessary to add additional points is the responsibility of the Owner.

1.02 I&C SYSTEM REQUIREMENTS

A. The Process SCADA System is to be a utility industrial grade equipment and shall integrate into the overall SWBNO plant control system. Tag numbers and IP addressing shall be coordinated with SWBNO to prevent any duplications.

B. Control systems shall comply with Section 25 05 11 Cyber security for Facility related Control Systems.

C. Provide Instrumentation and Control Valves with minimum functional requirements as defined in Sections 40 91 00, I&C Components and 40 92 13, Process Control Valves and Regulators. Datasheets are attached to the Specifications.

D. Provide Balance of Plant PLC Panel with attributes as specified in Section 40 94 23, PSS Balance of Plant Control System.

E. Provide fuel oil unloading station as specified in Section 23 12 13, Fuel Oil Transfer Equipment. Note Fuel Oil transfer equipment shall be controlled by the BOP PLC.

F. Provide loop drawings for the flow meters, temperature transmitters, pressure transmitters and limit switches with functional equivalencies as shown in Appendix A. Formats can be Contractor's standard.

G. Provide operator HMI's and graphics as defined in Section 40 94 24, PSS Human Machine Interface. Graphics workshops are defined in the specification.

H. Define and provide interface for datalink to Fuel Oil Forwarding Pumps provided by as part of Section 23 13 13 33, Fuel Oil Forwarding Pump Skid.

I. Define and provide interface for datalink to the Instrument Air Compressor.

J. Define and provide interface for datalink to the Turbine 7 control system and replicate graphics as confirmed in the graphics workshop. For purposes of this bid, assume 10 graphics and 500 points shall be the maximum required.

K. Provide a Modbus interface with the PDCS for signal exchange.

L. The equipment supplied under the Work is to be designed for all-weather access to operate and maintain the equipment in the extreme site operating conditions - essential systems that shall be able to operate reliably during extreme weather, such as hurricane, events for life critical SWBNO municipal system operation. Refer to Section 01 61 00, Common Product Requirements for specific environmental conditions.

M. Control Systems shall comply with related requirements in Section 01 88 15, Anchorage and Bracing and Section 01 45 36, Equipment Seismic Certification.

PART 2 PRODUCTS (NOT USED)

PART 3 EXECUTION

3.01 GENERAL

A. Equipment supply schedules and construction sequencing is extremely important for this project. An overall equipment supply schedule is required for incorporation in the overall project construction schedule.

3.02 INSTALLATION

A. Contractor shall be responsible for the installation of all the equipment as described in the Scope of Supply section.

B. Contractor shall be responsible for all the interconnecting field wiring from the local panels, junction boxes, and Devices, and other equipment required for a safe and functional control system.

C. Contractor shall be responsible for field verification of wiring within the West Power Complex and Fuel Oil Forwarding Pump skid for this Scope of Supply. All field verification activities shall be coordinated with Owner or Engineer's site representative.

3.03 FACTORY ACCEPTANCE TESTING

A. Contractor shall be responsible for demonstrating the operation of all equipment and overall systems operations included in the Work that is associated with the Networking cabinets, PSS control panel, HMI and interfaces. All testing activities shall be closely coordinated with, and part of the overall startup and commissioning plan specified above.

B. All control logic, sequencing, trips, and interlocks shall be tested and demonstrated during the testing phase.

C. All control loops shall be tested by Contractor in both manual and automatic modes to demonstrate ability of control loop to respond to step change in set point or a change in process variable.

D. The Contractor shall perform an integrated factory acceptance test (FAT) with at a minimum the equipment listed in Item A above in such a manner that all FAT punch-list items are resolved prior to the conclusion of the FAT.

3.04 SCOPE OF STARTUP AND COMMISSIONING:

A. Contractor shall be responsible for developing a startup and commissioning plan for all equipment and systems installed including fiber optics, networking, PSS, HMI's and connections to applicable systems. Work in coordination with the Owner such as to minimize affect to the overall operation and subject to

review and approval of the Owner. An approved Startup and Commissioning plan shall be in place before scheduling startup and commissioning activities.

B. All control elements necessary for the complete operation of the system(s) being started up and commissioned shall form part of the overall startup and commissioning scope.

C. Contractor shall be responsible for performing power up and grounding checks of those system elements installed or modified as part of the Work. Any field support required from equipment supplier(s) for power up, grounding check, and/or commissioning shall be included in the Contractor scope.

D. Contractor shall be responsible for commissioning the PSS control system, HMI, fiber networks and data links designed and supplied in the Work.

E. All the newly supplied control devices shall be provided with manufacturer's calibration certificates. The Contractor shall be responsible for recalibration of the device at Site. Calibration certificates shall be valid for one year from the date of commissioning.

F. Contractor shall be responsible for any field changes required to be made to the any programmed element, HMI graphics, network configuration or other controller logic to support plant startup and commissioning for a safe and complete system. Any field service time required from various equipment suppliers shall be included in the Contractor scope of work.

G. Contractor shall be responsible for setting up operator, engineer, and maintenance user groups and individual usernames and passwords for all PSS scope. All user group functionality shall be demonstrated by the Contractor.

3.05 TRAINING

A. Provide training so that the Owner can operate, maintain, change system configuration, and repair system equipment related to the PSS, HMI servers and all networking setup.

B. Provide training manual with information on the application, operation, troubleshooting, repair and maintenance of equipment. Supplement and enhance information provided in operation and maintenance manuals based on experience and lessons learned from previous projects.

3.06 APPENDICES

A. Appendix A – Example Loop Diagrams.

END OF SECTION

INTENTIONALLY LEFT BLANK

SECTION 40 90 20
INSTRUMENT INSTALLATION

PART 1 GENERAL

1.01 SUMMARY

A. The Specification covers the minimum requirements for the receiving, storage, handling, installation, calibration, and testing of process control instruments and control systems. The Specification also covers the minimum requirements for removal of existing instruments, tubing and control panels, when required to complete the Work.

B. This document defines the work process for onsite instrument installation Contractors, which shall be referred to as Contractor in this document.

1.02 FACILITY DESCRIPTION

A. The Sewerage and Water Board of New Orleans Water Treatment and Purification Facility produces potable water for Orleans Parish east of the Mississippi River in New Orleans, Louisiana. The Facility, also known as the Carrollton Water Treatment Plant, is located at 8800 South Claiborne Avenue in Orleans Parish. The Facility is powered by its own Power Plant which consists of Boilers 1 through 6, Steam Turbine-Generators 1, 3, and 4, Gas Turbine-Generator 5, and balance of plant equipment. The Facility Power Plant is in a building complex consisting of Power House, Boiler Room, Low Lift Building, High Lift Building, and A/B Pump Room.

1.03 WORK INCLUDED

A. Instrument and controls installation includes, but is not limited to, the following:

1. Instrumentation and controls receipt, storage and handling.
2. Protecting of all instruments, controls, PLC enclosures, and bulk instrumentation materials from the time of receipt at the jobsite until Final Completion. This includes temporary protection after installation until equipment is put in service (for example, protection from material falling from above, or protection from damage due to workers climbing on or near equipment).
3. Furnishing and installation of all necessary bulk instrumentation materials such as tubing, valves and manifolds, fittings, piping, instrument mounting stands, enclosures, wiring, wire markers, etc. that are required to perform the specified work. Individual instrument installation details have an abbreviated Bill-of-Material which references a Master Bill-of-Material. It is the Contractor's responsibility to do a complete and thorough material take-off using these Drawings and documents.

4. Location of instrument and controls equipment based on supplied location plans, piping isometrics and other applicable Drawings.
5. Providing all necessary supervision, labor, tools, test equipment, facilities, temporary supplies, and any other equipment required to test and calibrate the instruments and controls for the Project, including those instruments supplied and installed with skid mounted equipment or packaged mechanical equipment. All workers shall be skilled in the work to which they are assigned, and all work shall be performed under the direct supervision of an experienced and competent foreman.
6. Tagging of any instrument that does not have a factory-installed nametag.
7. Maintaining a current set of marked up "Record" documents for later incorporation on "as-built" drawings.

1.04 WORK NOT INCLUDED

A. The Contractor shall be responsible for all installation work associated with this Project. No installation work is specifically excluded from the scope of Work.

1.05 REFERENCES

A. The following documents shall be provided to assist the Contractor in the performance of the Work:

1. Section 01 61 00, Common Product Requirements.
2. Section 26 00 10, Electrical Summary of Work.
3. Section 26 05 04, Electrical Requirements for Packaged Mechanical Equipment.
4. Section 26 05 19, Low Voltage Cable.
5. Section 26 05 50, Electrical Equipment Installation.
6. Section 40 50 00, Power Plant Piping Material.
7. Section 40 90 11, I&C Summary of Work, including the Supplement Design Basis.
8. Section 40 92 13, Process Control Valves and Regulators.
9. Section 40 94 23, BOP and Boiler Common Draft PLC.
10. Section 40 94 24, BMS and CCS PLC Systems.
11. Instrument Index (Volume 4).
12. I/O List (Volume 4).
13. Wiring Drawings.
14. Instrument and Control Valve Datasheets (Volume 4).
15. Junction box and Panel Drawings.
16. Instrument Location Plan Drawings.
17. Instrument Installation Details.
18. Piping and Instrumentation Diagrams (P&IDs).
19. Piping Isometric (ISO) Drawings.
20. Electrical Connection Diagrams.
21. Equipment Contractor Installation Information.

1.06 CODES AND STANDARDS

A. All work performed under this Specification shall meet or exceed all applicable federal, state and local codes and regulations. Instrumentation and controls shall be in compliance with the latest edition of the following Codes and Standards, where applicable:

1. American Petroleum Institute (API):
   a. RP 551, Process Measurement Instrumentation.
   b. RP 552, Transmission Systems.
2. American Society for Testing and Materials (ASTM):
   a. A123/A123M, Standard Specification for Zinc (Hot-Dip Galvanized) Coatings on Iron and Steel Products.
   b. A213/A213M, Standard Specification for Seamless Ferritic and Austenitic Alloy-Steel Boiler, Superheater, and Heat-Exchanger Tubes.
   c. A269, Standard Specification for Seamless and Welded Austenitic Stainless Steel Tubing for General Service.
3. International Society of Automation (ISA):
   a. RP12.4, Pressurized Enclosures.
   b. 77.70, Fossil Fuel Power Plant Instrument Piping Installation.
4. National Electrical Manufacturers Association (NEMA):
   a. ICS-1, Industrial Control and Systems General Requirements.
   b. ICS-6, Industrial Control and Systems Enclosures.
5. National Fire Protection Association (NFPA):
   a. 70, National Electrical Code.
   b. 85, Boiler and Combustion Systems Hazards Code.
   c. 496, Standard for Purged and Pressurized Enclosures for Electrical Equipment.
6. American Society of Mechanical Engineering (ASME):
   a. PTC 19.2, Pressure Measurement.
   b. PTC 19.3, Temperature Measurement.
   c. PTC 19.3TW, Thermowells.
   d. PTC 19.5 Flow Measurement.
   e. PTC 46 Performance Test Code on Overall Plant Performance.

1.07 QUALITY ASSURANCE

A. Contractor shall comply with the quality assurance (QA) and inspection requirements specified elsewhere in the Contract.

B. Contractor shall be responsible for ensuring that factory test reports are furnished for all Contractor supplied equipment that is assembled, tubed, wired and tested at the factory. The minimum requirements for QA and inspections shall be provided to the Contractor with each purchase order.

C. For all equipment purchased or fabricated by Contractor, a minimum of 2 weeks' notice of fabrication and inspection points shall be given to allow Engineers or Owner to witness and inspect testing.

D. Owner declining to witness any test or inspection shall not relieve the Contractor of any responsibility for compliance with any specification or technical requirements.

1.08 RECEIVING, STORAGE, AND HANDLING

A. All instrumentation and control panels shall be received, inspected and stored by the Contractor at the jobsite until the instruments are ready to be installed. All instrument tag numbers, and model numbers shall be verified against the instrument datasheets, instrument index, and Contractor documentation. Any discrepancies shall be brought to the attention of the Owner. Any item received by the Contractor without a tag number shall be tagged with a stainless steel tag by the Contractor prior to placing the item into storage.

B. Store all items in a clean, dry place. Protect from weather, dirt, water, construction debris, and physical damage in accordance with manufacturer's instructions.

PART 2 PRODUCTS

2.01 TUBING

A. Tubing:

1. For process tubing, defined as piping running between an instrument and the block valve nearest the process. For instrument air supply tubing, defined as piping running between the control valve or instrument and the block valve on the air header or subheader.
2. Conform to ASTM A269/A213.
3. Type 316 stainless steel, seamless, annealed and pickled. The tubing shall be 1/2-inch OD for most applications. Contractor shall obtain Owner's permission for use of other tubing sizes on specific applications.
4. Wall thickness of the tubing is dependent on the pressure and temperature conditions of the process. Minimum wall thickness of the tubing shall comply with Table 1, but in no case shall wall thickness be less than 0.049 inch.
5. Pressure-temperature rating of tubing shall be accurately determined from tubing manufacturer's product Specifications.

Table 1 Minimum Wall Thicknesses For Tubing (ASTM 269/A213 Type 316 Stainless Steel)		
Pressure Rating (psig)	**Size (OD, Inch)**	**Wall Thickness (Inch)**
2,000 and below	3/8	0.049
	1/2	0.049
2,000 to 4,000	3/8	0.065
	1/2	0.065
4,000 to 6,000	3/8	0.065
	1/2	0.083

B. Tubing Fittings:

1. Type 316 stainless steel, conforming to ASTM A213/A213M and ASTM A269.
2. Fittings shall be compression type with two ferrules and hex nut, Swagelok “or-equal”.
3. Male threads shall be rolled. Nuts shall be pre-lubricated.
4. Only one brand of tubing fittings shall be provided for entire Project.

C. Valves and Manifolds:

1. Process tubing runs for pressure instruments shall have a manifold valve installed directly mated to (preferably), or next to, instrument. Typically, this manifold is provided by Contractor with the instrument.
2. The body, stem, and trim of the process tubing valves shall be Type 316 stainless steel minimum. More corrosion resistant materials shall be provided if required by process service.
3. Gauge and absolute pressure instruments shall be provided with 2-valve manifolds. Differential pressure instruments shall be provided with 5-valve manifolds.
4. Valves/manifolds in services with pressures below 4,000 psig shall have compression type tubing connectors.
5. Valves/manifolds in services with pressures above 4,000 psig shall have bar-stock bodies with nonrotating stems and threaded end connections.
6. PTFE packing shall be provided for services below 450 degrees F. Graphite packing shall be provided for services above 450 degrees F.
7. Packing shall be nonasbestos.
8. Packing and seat material shall be designed to withstand full process operating pressures and temperatures.
9. Support valves/manifolds independently of tubing.

D. Tubing Raceways:

1. If required by Project Specifications, construct of either hot-dip galvanized steel in accordance with ASTM A123/A123M or heavy-duty reinforced fiberglass.
2. Accessories such as nuts, bolts, and clamps shall be Type 316 stainless steel.
3. Angle bracket shall be fabricated of Type 316 stainless steel or hot-dip galvanized steel. Beam clamps shall be galvanized steel.
4. Widths: 1 inch, 1-1/2 inches, 2-1/2 inches, and 4 inches.
5. Depths: 3/4 inch and 1 inch.
6. Support tubing every 3 feet of running length of tubing.
7. Slope tubing in accordance with instrument installation details. Minimum slope is 1/2 inch per foot.

2.02 INSTRUMENT ELECTRICAL

A. General:

1. Ensure that instrumentation meets the NFPA 70, National Electrical Code (NEC) area electrical classification.
2. Confirm that wire and cable construction and materials are suitable for special conditions such as high temperature, intrinsically safe and corrosive or contaminated environments as specified on the detailed cable schedules.
3. Electrical enclosures, conduit, and fittings shall comply with the requirements of the Project electrical Specifications.
4. Control signal and power supply cables shall comply with the requirements of the Project electrical Specifications.

B. Wiring Methods:

1. Electrical wiring and equipment shall be installed in accordance with the Project electrical Specifications.
2. No splices are permitted in control wiring.
3. No wire nuts are permitted.
4. Instrument control signal cables and electrical power cables shall only cross at right angles.
5. 24V dc signal wiring shall not be installed in the same tray, channel or raceway with 120V ac or higher electrical wiring.
6. Care shall be taken in the layout of terminals and in the wiring method used to prevent contact between circuits if a wire becomes disconnected.

C. Electrical Transmission System:

1. Signal for the electrical transmission system shall be direct current (DC). Signal current shall be 4 to 20 milliamperes (mA).

2. Terminals shall contain screw-clamp type terminal blocks with Phoenix Contact (or equal) terminal connectors with pre-printed terminal block markers.
3. Thermocouple signals shall be millivolt (mV).
4. Thermocouple terminals of the proper type shall be utilized for signal interface.

2.03 FIELD JUNCTION BOXES

A. Terminal boxes, junction boxes and field panels shall be rated NEMA 4X minimum and shall be constructed of Type 316 stainless steel with stainless steel hardware.

B. On any skid requiring connection between on-skid instrumentation and control devices and off-skid instrumentation and control devices, skid Contractor shall provide an on-skid instrumentation junction box on a structural steel support. Junction boxes are to be manufactured according to Project Drawings. A nameplate shall be installed on the face of the junction box identifying as a minimum its tag number, service description, and Project name.

C. Manufacturers: we include manufacturers here if required.

2.04 MOUNTING

A. Field instruments shall be installed and mounted as required or recommended by ISA 70.70 standard, ASME PTC 19.2, PTC 19.3, PTC 19.5, and PTC 46.

B. Instrument installation details have been prepared by the Engineers. Should a variation of the detail be required, the Contractor shall submit a Request for Information (RFI) with a sketch of the proposed variation to the Engineers or Owner for approval prior to installation of the instrument.

C. Contractor shall determine the type and quantity of instrument stands required for the application and location based on instrument location drawings and installation details.

D. The Contractor shall provide all mounting hardware for field instrument items.

E. Pipe for instruments to be mounted on pipe stands shall be 2-inch Schedule 40 galvanized carbon steel pipe.

1. Sides of the baseplate of the pipe stand shall be a minimum of 8 inches and manufactured of galvanized steel with a thickness not less than 3/8-inch.
2. The pipe stands shall be of all-welded construction. Supporting and mounting hardware shall be stainless steel.

F. Instruments shall be accessible for maintenance without the use of ladders taller than 6 feet, scaffolding, or portable man lift equipment such as a cherry picker.

G. Instruments shall be piped and/or tubed with sufficient clearance for removal of the instrument for service.

H. Where practical, the centerline of an instrument mounted at grade or on a platform shall be 4 feet 6 inches above grade or platform.

I. Instruments shall not be mounted on handrails, ladders, in pathways, or on pipe or equipment that is subject to vibration.

J. Instrument mounts shall not be welded to process lines, vessels or equipment.

K. All root valves shall be furnished and located by Contractor. All other hand valves required by instrument installation details shall be located by Contractor in accessible locations for operation and maintenance.

L. Thermowells shall be clear of all foreign materials prior to installation of the thermal sensitive elements.

M. If any filled temperature and/or pressure capillary systems are required, the Contractor shall support and protect the capillary with steel channel or tube tray. Excess capillary shall be coiled and protected at the instrument.

N. Capillary shall be shielded from the sun and from nearby heat sources so that the reading shall not be influenced by ambient conditions.

O. If any armored cable is required, the cable shall be supported in steel channel and excess cable shall be neatly coiled and secured.

P. The following table shall be used for determining required accessibility of instruments:

1. Type 1: Grade, platform or stairway.
2. Type 2: Grade only.
3. Type 3: Grade, platform, stairway, permanent ladder or portable ladder.

Type of Instrument	Access Type Required
Transmitter	1
Local indicator	1
Pressure gauge	3
Thermowells	3
Self-contained regulators	1
Local controllers	1

Type of Instrument	Access Type Required
Process actuated switches	3
Frequently monitored or adjusted instruments	1
Emergency instruments	2
Thermocouples and RTDs	3

2.05 IDENTIFICATION AND MARKING

A. Nameplates:

1. Instrument equipment shall be labeled for identification. Each nameplate shall be clearly displayed in an accessible location on the item.
2. Nameplates shall be Type 316 stainless steel and shall be permanently attached to instrument with Type 316 stainless steel screws, rivets, or wire.
3. Each nameplate shall clearly display the instrument tag number as assigned to the instrument and as shown on the current version of the P&IDs.
4. Intrinsically safe instrumentation shall have the following information listed on a nameplate. The nameplate shall be permanently attached by Type 316 stainless steel screws or rivets.
   a. Manufacturer.
   b. Model.
   c. Serial number.
   d. Instrument tag number.
   e. Hazardous area, class, and group suitability.
   f. A statement saying that the instrument is “INTRINSICALLY SAFE”.
   g. A statement saying that “ANY SUBSTITUTION OF COMPONENTS MAY IMPAIR INTRINSIC SAFETY”.
   h. Maximum allowable surface temperature of the instrument.
   i. The authority certifying that the equipment is intrinsically safe.
5. If part of the above information is missing or not clearly legible, do not install the equipment. Notify the Engineers or Owner.
6. Nameplates for field instruments shall be stamped with the instrument item number and chart multiplier factor, if applicable.
7. Lettering for nameplates shall be a minimum of 3/16 inch.
8. Identification tags shall be left securely attached to the instrument and shall not be removed during installation.

B. Instrument Tubing Identification:

1. Tubing shall be provided with Type 316 stainless steel identification tags on each tubing run located at 20-foot intervals. The tags shall list the instrument tag name and process fluid (steam, water, natural gas, etc.). Additionally, tubing labels for differential pressure installations shall identify with “H” and “L” which tube is high side and which is low side.
2. The tube tags shall be attached with stainless steel wire.

C. Instrument Cable Identification: Individual conductors shall be identified with wire markers installed at terminals and junction boxes in accordance with the Project electrical Specifications.

PART 3 EXECUTION

3.01 GENERAL

A. Electrical instruments shall not be located in areas where the ambient temperature exceeds 130 degrees F.

B. Instruments shall not be supported on handrails or equipment subject to vibration.

C. Instruments subject to vibration shall be mounted to minimize the effect of vibration. An anti-vibration recorder mount, or similar device, may be used.

D. Fiber optic cable shall be installed and terminated by a licensed Contractor certified in fiber optic installation.

E. Instruments shall be mounted with a clearance of at least 2 feet per 100 degrees F from equipment with surface temperatures in excess of 200 degrees F.

F. Provide minimum 18-inch clearance for worker access around an instrument installation. For specific instrument installation, refer to instrument installation detail drawings provided. Do not install instrumentation so that it protrudes into walkways.

G. Local instruments shall be mounted no more than 30 feet from the point of measurement without Engineer’s approval.

H. If the adjustment of one locally mounted instrument device affects the operating of another (such as local controllers and control valves), the devices shall be mounted so that both devices can be seen at the same time.

I. Mount instruments so centerline of device is 4 feet 6 inches above the platform or grade.

J. The connection or welding of instrument supports or brackets to structural steel shall be approved by the Engineer prior to performing the actual work.

K. Welding on process equipment or process piping shall be approved by the Engineer prior to performing the actual work.

L. Support and protect capillary tubing of filled and sealed instruments from damage. Do not cut or remove capillary tubing. Any extra length shall be neatly coiled at the instrument end of the tubing.

M. Materials that are to be attached or clamped to process piping or equipment shall be selected to avoid electrolysis.

N. Junction boxes shall be mounted in the vertical plane. Tubing and conduit penetrations shall be made in sides or bottom of junction box to prevent water entry. Unused entry holes shall be blanked. Adequate clearance shall be provided for door swing.

3.02 INSTRUMENT CALIBRATION

A. All instruments shall meet the manufacturer's published Specifications. Instruments that do not satisfy the manufacturer's Specifications shall be repaired or returned to the manufacturer.

B. All instrumentation, including that supplied on or with Owner supplied equipment shall have a current calibration at the time of Substantial Completion. Instrumentation provided on or with Owner supplied equipment is likely to exceed one-year since most recent calibration and shall be recalibrated prior to Commissioning and Start-up.

C. The manufacturer's recommended calibration procedures shall be followed for all instrument calibration when needed. The Contractor shall record all calibration data on a "calibration" sheet. For instruments received with factory Certified Calibration Reports, Contractor shall verify calibration of these devices. In general, instrumentation received with factory Certified Calibration Reports do not need further calibration unless instrument is to be used for performance testing (or other special purposes requiring immediate calibration) and factory calibration occurred more than 6 months prior to the performance test.

D. Test instruments shall be provided by the Contractor with equal or better accuracy as noted below:

Inclined water manometer	0.1% full scale
Dead weight tester	0.1% full scale
Precision pressure gauge	0.25% full scale
Digital voltmeter	0.1% full scale

Current and/or voltage meter	0.25% full scale
Precision potentiometer	0.3% full scale
Precision temp potentiometer	0.3% full scale
Precision resistor decade box	0.1% full scale
Stopwatch	0.1 seconds

E. The Contractor shall confirm that all instruments comply with the instrument index, instrument datasheets and manufacturer documentation. Items to be checked include but are not limited to the following:

1. Instrument tag number.
2. Model number and serial number.
3. Size and Connection type.
4. Materials of Construction.
5. Instrument ranges and setpoints.
6. Thermowell lengths.
7. Thermocouple and RTD types.

F. Control Valves and self-contained pressure regulators shall be inspected to verify against the Datasheets the following as a minimum:

1. Valve body and trim materials of construction.
2. Valve body size and type.
3. Valve end connection size and type.
4. Valve action and fail position.
5. Valve stroke time (for fast operating valves).
6. Valve actuator, accessories and position switches or transmitter (when supplied).
7. Valve shall be checked to ensure that it seats properly when the appropriate bench set pressure is applied to the actuator.

3.03 INSTRUMENT LOCATIONS

A. Instrument location plan drawings have been prepared by the Engineers. These Drawings have been provided for the Contractor to use as a guideline for locating instruments. It is the Contractor's responsibility to determine the most appropriate location for the instruments based on the final configuration and location of equipment.

B. Instruments are to be located with attention given to instrument accessibility for maintenance purposes and personnel safety.

C. The final installed locations of the instruments shall be documented by the Contractor with the Contractor providing final marked up "record" location plans to the Engineers or Owner.

3.04 INSTRUMENT INSTALLATION

A. Field instruments shall be installed as required or recommended by ISA-70.70 standard, ASME PTC-19.2, PTC-9.3, PTC-19.5, and PTC-46.

B. Instruments shall be accessible for maintenance without the use of ladders taller than 6 feet, scaffolding, or portable man lift equipment such as a cherry picker. Tubing run from the tubing supply valve to the instrument shall be as short as possible. Instruments shall be line-mounted, rack-mounted or stand-mounted. No instruments shall be mounted on handrails. Instrument racks and stands shall be mounted directly on structural steel or on concrete.

C. Pipe-mounted pressure gauges shall be provided with siphons, as required, for steam service, pulsation dampeners for pulsating flow, and diaphragm seals for corrosive or severe service.

D. Pressure type instruments shall have associated isolation and test valves or combination two valve insulation /test manifolds. Differential pressure type instruments shall have associated pairs of isolation and equalizing valves or a five-valve isolation/equalizing manifold. Pressure transmitters and differential pressure transmitters shall be directly mounted to the manifold. Diaphragm seals shall be provided for corrosive or severe service.

E. Sensing elements shall be located with adequate clearance for removal and replacement. Taps on process lines shall take into account requirements for venting and draining. In order to prevent plugging, no taps shall be located on the bottom of pipes. Instrument taps shall be mounted either on the side or top of pipes as required. Installation and routing of sensing lines shall take into account requirements for blowdown or back flushing of lines.

F. Typical instrument installation detail drawings shall be provided by the Engineers to define how the instruments shall be installed by Contractor.

G. Installation and routing of sensing lines shall take into account requirements for thermal expansion of the tubing under normal process conditions.

H. Instrument tubing shall be insulated as required, in accordance with Project piping insulation Specifications.

3.05 INSTALLATION CHECK-OUT

A. All instruments and accessories shall be visually inspected for damage after installation. If damage is observed, corrective action shall be initiated.

B. All instruments shall be free of shipping restraints and stops. Glass shall be clean. Temporary protective devices shall be removed prior to placing instruments in service.

C. Verify that all instruments and instrument tubing are correctly tagged, labeled, and installed at the correct location and orientation.

D. All primary elements shall be checked for proper installation with respect to direction of flow, elevation, orientation, insertion depth of thermowells, or any other applicable considerations.

E. Instrument electrical wiring shall be checked for proper termination and labels.

F. Instrument piping and/or tubing which is process-connected shall be checked for fitting type materials, connection sizes and rating. Verify that adequate brackets and supports have been used to maintain continuity of rigid construction.

G. On installations which involve instrument seal pots or reference (wet) legs, the system shall be filled. All seal/fill fluids shall be supplied by the Contractor.

H. Verify that the air supply for each instrument is correctly installed.

I. All tubing connections shall be checked per manufacturer's recommendation. Over-tightened connections shall be replaced. Tubing with scars from a tube cutter or knife used to remove the sheathing shall be replaced.

J. Do not install primary in-line elements until the process line has been flushed clean.

K. In general, for in-line elements in piping subject to steam blows, do not install the element until after steam blows. If the in-line instrument must be installed before steam blows, such as for welded thermowells in critical pipe spools, then the instrument shall be designed to withstand the highest expected velocity without damage or fatigue, even if such velocities are infrequent or of short duration. If the in-line instrument is removable, such as orifice plate or threaded/flanged thermowell, it may be installed before steam blows as long as it is removed for steam blows and associated pipe taps are capped or plugged.

L. All transmitters shall be isolated from the process lines and vented to atmosphere for overpressure protection during flushing and steam blows.

3.06 ROTAMETERS

A. Mount rotameters vertically. Vertical alignment shall be verified.

B. Verify that rotameter float and follower can travel full range.

3.07 ORIFICE METERS

A. Inspect orifice plate for correct tag number, line size, bore size, plate thickness and material, inlet side correctly identified, and when applicable, drain and vent holes size and location and eccentric bore orientation.

B. Inspect for nicks, burrs, wire edges, or other defects that would affect measurement accuracy.

C. Orifice plates in pipes subject to steam blows, compressed air cleaning, or other high velocity cleaning are removed prior to steam blows/cleaning to ensure orifice plates are not damaged.

D. Install orifice plate in the correct orientation in accordance with ASME PTC 19.5 paragraph 4-5.5 and manufacturer labelling. Typically, this shall be with the beveled side facing downstream and square edge facing upstream.

E. Orifice plates on horizontal runs of pipe are installed so that the orifice plate can be removed vertically.

F. Locate differential pressure flowmeters for liquid or steam and condensable vapor service below orifice flanges. Verify that associated impulse piping/tubing is sloped continuously downward from flange taps to flowmeter. Verify correct installation of condensate pots or wet leg fill connections. Verify wet legs are filled.

G. Locate flowmeters in gas service above the orifice flanges. Verify that associated impulse piping/tubing is sloped continuously upward from flange taps to flowmeter.

H. Instrument Contractor (Contractor) and Piping Contractor shall verify that the proper straight runs of pipe both upstream and downstream of the orifice have been correctly installed.

I. Verify that associated piping/tubing is sloped in proper direction. Minimum slope is 1/2 inch per foot.

J. Differential pressure instrument shall be located as close as possible to the sensing point. Verify that the instrument is installed correctly.

K. Verify high and low pressure connections are piped correctly for direction of flow.

3.08 IN-LINE AND INSERTION TYPE FLOWMETERS

A. Verify that the flowmeter is installed and grounded in accordance to manufacturer’s instructions.

B. A startup strainer shall be provided for all insertion type meters (vortex, turbine, positive displacement, etc.) to prevent fouling the meter during startup and commissioning. Strainer shall be removed before normal plant operations begin.

C. Flow transmitters that are not integral to the element shall be mounted as close as possible to the flow element.

D. In-line and insertion type flowmeters in pipes subject to steam blow shall not be installed until after steam blow.

3.09 ANNULAR COMBUSTION AIR FLOW METERS

A. Follow installation detail for the instrument.

3.10 MAGNETIC FLOWMETERS

A. Verify that the flow direction through the meter is compatible with the orientation of the sensing element and that the meter shall always be full of liquid.

B. Verify that the wiring connection and grounds are correct.

3.11 TEMPERATURE INSTRUMENTS

A. Thermowells shall be of the welded, threaded or flanged type as shown on the Piping ISO's and instrument datasheets. Verify that thermowell material type and material match instrument datasheets and comply with the Project piping Specifications.

B. Verify thermocouple or RTD type against instrument index and datasheets.

C. For weld-in and socket weld style thermowells, ensure temperature sensor is removed before welding the well into the pipe or socket.

D. Thermowells shall be installed prior to hydrotesting or leak testing, except for welded thermowells in lines subject to steam blows.

E. In general, welded thermowells in pipes subject to steam blows, compressed air blows, or other high velocity cleaning shall not be installed until after steam blows/cleaning, so that well and weld is not damaged by flows exceeding wake frequency. If thermowells must be installed before steam blows, such as for welded thermowells in critical pipe spools, then the Contractor shall verify that the thermowell has been designed to withstand the highest expected velocity without damage or fatigue.

F. Threaded or flanged thermowells in pipes subject to steam blows, compressed air blows, or other high velocity cleaning may be installed before steam

blows/cleaning, but shall be removed for steam blows/cleaning to prevent damage from flows exceeding wake frequency.

G. Ensure temperature sensors such as thermometers, thermocouples and resistance temperature detectors are installed in their respective thermowells. Ensure thermowell bore is clean and dry before inserting the sensor.

H. Verify that the temperature sensor is in proper contact with the bottom of the thermowell.

I. Hermetically sealed, bimetallic thermometers shall be located to be readable from grade or from a working platform.

J. Bulb and capillary style temperature instruments shall have capillary supported and protected with steel channel or tube tray. Excess capillary shall be coiled and protected at the instrument. Capillary shall be shielded from the sun and from nearby heat sources so that the reading shall not be influenced by ambient conditions.

3.12 LEVEL INSTRUMENTS

A. Level instrument installations shall be designed and installed to be readable and to permit maintenance from grade or platform. Block and drain valves shall be accessible.

B. All gauge glasses in process and utility service shall be reflex or transparent. Gauge glasses shall be installed on vessels on connections separate from any other instrumentation. Transparent gauges shall be provided with illumination.

C. All differential pressure type level instruments shall be installed with isolating gauge valves. Vents and drains shall be provided according to service.

D. Differential pressure type level instruments shall be located as close as possible to the sensing point. Contractor shall check to verify that each leg of the transmitter is filled with the proper fluid, if applicable, and that high and low pressure connections are connected correctly.

E. Float or Displacement Type Level Switches:

1. Verify that the specific gravity setting is correct.
2. Verify that the displacer is plumb and manually check for freedom of movement.

F. Magnetic Level Gauges:

1. Examine for orientation and visibility.
2. If gauge cocks, vent valves or drain valves have been specified, verify that they are properly installed.

3. Note proper orientation of horizontal ball check block valves, if applicable.
4. Verify and adjust the flag assembly and gauge board to provide the best possible visibility.

G. Guided Wave Radar Type Level Transmitters:

1. Verify that the level probe is installed correctly per the manufacturer's instructions and installation details provided by the Engineers.
2. Verify proper alignment with the guides or stilling well and that "swinging" is not possible.
3. Verify that a sufficient number of holes have been correctly made in the stilling wells to allow for air to escape and not block the fluid from traveling up the stilling well.

3.13 PRESSURE INSTRUMENTS

A. Pressure gauges shall be installed directly on the line or equipment they are servicing except where vibration shall impair operation, or where process conditions shall exceed gauge ratings, and then they shall be mounted remotely. All other types of pressure instruments shall be mounted on separate brackets in the vicinity of the root valve.

B. Pressure gauges in condensing vapor service shall be mounted above the process taps and installed with siphons or pigtails.

C. Pressure gauges or liquid filled gauges on services that surge shall have pulsation dampeners.

D. Pressure gauges shall be readable from grade or from a platform.

E. Verify piping/tubing is sloped in proper direction. Minimum slope is 1/2 inch per foot.

F. Verify instrument and valve manifold have been installed properly (no ball checks).

3.14 CONTROL VALVES

A. Contractor shall inspect each valve prior to installation and notify the Engineers or Owner if any suspected damage is evident. Contractor shall verify the following: that the valves were shipped upright to prevent damage to the internal parts; that there is no damage to the inlet/outlet flanges; that inlet/outlet ports and other openings were covered during shipment and storage to keep the internals clean; and that the bonnet vents are clear of obstruction.

B. Solenoid valves, where required, shall be installed between the positioner and actuator, and shall meet the area classification.

C. All control valves shall be accessible from grade or platform. Sufficient space shall be provided to permit actuator removal and valve assembly removal for maintenance.

D. Verify that all control valves are installed correctly with respect to direction of flow.

E. Verify that all accessories have been included and are functional.

F. During hydrostatic testing and line flushing, control valves shall be removed or "blinded off" from the line during testing and flushing. Block valves may be left in the line, but precautions shall be taken to ensure that the block valve trim is not damaged by foreign material in the line.

G. On self-contained pressure regulators, verify that external pressure sensing piping, when required, is correctly installed.

H. The existing control valves, safety relief valves and pressure regulators that are identified as refurbished on the P&IDs shall be removed from the line by the Contractor. These valves shall be sent to the authorized valve manufacturer repair shop to undergo refurbishment by the Contractor. The valves shall be refurbished and repaired as per Fisher control valve Class A repair service. The valves shall be cleaned and repainted. The valve trim, plug cage, and seat shall be inspected and repaired to make the valve performance similar to a new valve. New I/P transducers shall be installed. New Fisher DVC 6200 electronic valve positioners shall be installed on the valves. All interconnecting pneumatic piping and instrument air tubing shall be installed, connected and tested. Any other valve parts, actuator etc. shall be repaired and refurbished. The control valves shall undergo quality inspection, stroke and leak check after the valves are refurbished. Contractor shall be responsible for transportation of valves back to the plant site. After receipt of the control valves onsite, Contractor shall perform the installation, testing and calibration as described above.

I. All new control valves data sheets specify each control valve complete with actuator, positioner, I/P converter and filter/regulator completely assembled requiring only interconnecting electrical signals and air supply for operation. Provide and install all required components and interconnecting wiring and pneumatic tubing.

3.15 PRESSURE SAFETY/RELIEF VALVES

A. Contractor shall inspect each relief valve prior to installation and notify the Engineers or Owner if any suspected damage is evident. Contractor shall verify the following: that the valves were shipped upright to prevent damage

to the internal parts; that there is no damage to the inlet/outlet flanges; that inlet/outlet ports and other openings were covered during shipment and storage to keep the internals clean; and that the bonnet vents are clear of obstruction.

3.16 INSTRUMENT AIR SUPPLY

A. Route, install, support, connect and test all instrument air piping and tubing from the instrument air piping header block valve to all instruments and control valves that require an air source.

B. The instrument air tubing shall be installed with as few joints or connections as possible. Tubing shall be reamed of burrs and cleaned of scale, dirt, oil and chips. Unions shall be provided as required. Keep threaded connections to a minimum by using bends on process tubing.

C. Each instrument air user shall have a shut-off valve installed at the end-user in such a manner as to allow the instrument to be removed without removing the valve. Each secondary branch header shall be supplied with a block valve located at its take-off point from the main header. Secondary branch headers, not supplied by piping, shall be supplied by the Contractor if the Engineers determine they are required for proper air distribution.

D. Instrument air supply, main headers and air stations shall be fabricated such that subheader branches shall come from the top of the pipe, wherever possible.

E. All headers, subheaders, branch headers and air station piping shall be sloped to a 1/2-inch drain valve located at the low points and at the end of the header.

F. The Contractor is responsible for routing air supply lines in such as manner as to avoid obstruction of the operation, maintenance or removal of equipment, instruments, panels, and overhead cranes. Walkways, platforms, ladders and stairs shall not be obstructed in any manner.

G. Instrument Air Piping and Tubing Testing:

1. Clean and pressure test all instrument air tubing and piping.
2. Blow all instrument air piping or tubing clean and test for leaks using clean dry instrument air or nitrogen. No water shall be used. Test pressure shall be 75 psig or 1.5 times working pressure (whichever is greater), and care shall be taken to make certain no instruments, controls or miscellaneous devices are connected. Systems shall only be acceptable that exhibit a zero leakage test using a bubbler or test gauge. Where leaks do exist, location shall be determined using commercially compounded solutions specifically for the test medium used. The Contractor shall correct all problems discovered during testing and then shall retest the section in question to verify that the problem has been corrected.

3. Maintain an accurate log and documentation of all cleaning and acceptable pressure tests. Turn over log and test documentation to Owner upon completion.
4. After testing, the Contractor shall be certain all root valves are closed. All instrument shutoff valves and manifolds shall be shut, and bypass valves opened. Blowdown valves shall be open. Instrument air supply valves shall be closed and the vents on the filter/regulators opened. With this complete, all connections shall be made to instruments, controls, and miscellaneous devices.
5. The air supply from the valve station to each individual instrument shall be disconnected and blown down before initial admission of instrument air to any instrument.

3.17 INSTRUMENT PROCESS, CONTROL, AND AIR PIPING AND TUBING

A. Tubing, valves and fittings shall be installed by the Contractor in accordance with the instrument installation details.

B. Contractor shall furnish, route, install, support, connect and test all tubing, piping, fittings, and isolation valves from the root valves to the locally mounted instruments.

C. Tubing, valves and fittings shall conform to applicable piping material Specifications.

D. Valves and Manifolds:

1. Install instrument with manifold directly mated to it (typically instrument is provided factory-installed on the manifold). If manifold cannot be directly mated to instrument, install adjacent to instrument as close as possible.
2. Support manifolds and valves in tubing runs independently of the tubing.

E. Pneumatic and Process Signal Tubing Installation:

1. Tubing shall be straight, securely fastened, and neatly arranged to facilitate insulation and troubleshooting.
2. Relieve strain on all connections by properly supporting all tubing, piping, pots, leads and instruments.
3. Process and pneumatic single tubing runs of less than 20 feet may be strapped to adjacent pipe or clamped to structural beams. No more than two tubing runs shall be run on a pipe. Tubing runs of less than 20 feet shall be supported every 3 feet of running length.
4. All other tubing and tubing bundles shall be run neatly in tube trays, steel channel, or raceways, and shall be securely fastened. Tray, channel and raceway shall be supported from structural members at intervals not more than 10 feet.

5. Commercial one-tube and two-tube tubing clips and 2-piece tube clamps may be used. All tube clips, supports, or clamps shall be removable and replaceable without cutting or burning. Tube clip supports and clamps shall be cadmium plated steel, insulated to prevent galvanic action.
6. No clip or support shall be within 12 inches of the final connection and the final connection shall be piped or tubed so that it can be disconnected from the instrument without bending the tubing or without removing or slackening the clips or supports. On high pressure systems, a clip or support shall be located within 6 inches of the final connection to prevent excessive tube "whiplash" should a connection fail.
7. Instrument process and air tubing shall not be run in electrical cable trays.
8. Raceway, tube-tray, or tubing may be strapped from the process piping, if free of vibration and if no interferences or excessive heating would be caused. Straps shall not damage or interfere with process piping insulation or heat tracing.
9. Do not route tubing through areas where a high risk of fire or mechanical damage exists (such as over vessels, compressors, or pumps).
10. Route tubing to avoid removal of the tubing when maintenance or repair of equipment is required.
11. Tubing shall be square cut using tube cutters. All ends shall be reamed to full tube inside diameter. Burrs shall be removed from each cut.
12. Tubing bends, if required, shall be 90 degrees.
13. All single metal tube bends shall be made with a tube bender. Manufacturer's recommendations for bend radius and installation of tubing bundles and traced tubing shall be followed.
14. All tubing bends and straight sections shall be free of wrinkles, creases, flattening, sags and bows.
15. The number of tubing connections and bends shall be minimized.
16. Keep threaded connections to a minimum by using bends on tubing. If threads shall be used, they shall be cut with the proper die for the particular application according to the manufacturer's instructions.
17. Instrument piping shall be arranged to avoid measurement error caused by condensate build-up in gas service, air entrapment in liquid service, or overheating of the instrument in hot fluid service. To this end, the process signal tubing of pressure and differential pressure instruments shall be sloped in accordance with the instrument installation details and free of pockets. Minimum slope is 1/2 inch per foot.
18. Tubing runs requiring the use of unions shall have the tubing bent to lift the union from the tray for ease of inspection and maintenance.
19. Stagger offsets for unions and tees on parallel tubing runs.
20. Use elbow fittings instead of straight fittings for tubing bends; branch or street tees instead of connectors with all tube tees; and properly sized tubing fittings to match pipe connections instead of bushings or swages.
21. Changes of direction in tubing installations shall be accomplished by forming radius bends in the tubing, whereas changes in direction in

piping installations shall be accomplished by fittings (90 degree elbows, etc.).

22. Instrument piping that requires periodic cleaning to prevent plugging shall be reviewed by the Engineers before installation begins.
23. No tubing runs shall be laid one on top of another. Wherever possible, tube runs shall be laid out avoiding crossing one tube over another. Where this is unavoidable, clearance shall be provided to prevent chafing and allow for maintenance.
24. Process tubing runs between the instrument and the block valve to the process shall be as short as possible.
25. Routing of tubing in potentially hot areas shall be avoided.
26. Make tubing runs 20 feet or shorter with stick tubing.
27. Multi-tube bundles shall not be buried, but may be run through conduit, laid in trays, or strapped to Unistrut parallel to electrical conduit.

F. Tubing Fittings:

1. Do not install fittings with galled or deformed threads.
2. The sealer/lubricant for stainless steel to stainless steel National Pipe Thread (NPT) fittings shall be tetrafluoroethylene (TFE) paste. The sealer / lubricant for all other combinations of material shall be TFE paste or TFE tape.
3. Use antigall compounds approved by the tubing manufacturer on threads of tube fittings.
4. Do not exceed temperature rating of antigall compound.
5. Tighten tube fittings in accordance with manufacturer’s instructions.

G. Tubing Trays or Channels:

1. Ensure installed tubing trays shall not present a hazard to personnel, block access ways, or prevent passage of equipment.
2. Support horizontal and vertical runs of tubing trays at intervals not exceeding 10 feet.
3. Support three or more tubing lines with tubing trays or channels.

H. Tubing Labeling:

1. Each entry or exit of tubing from a panel or junction box shall be identified at the bulkhead with a label stating the instrument to which it connects.
2. Differential pressure instrument tubing shall be identified by “H” for “high” or “L” for low.

3.18 INSTRUMENT ENCLOSURES

A. Instruments with housings that are not appropriately NEMA rated (for example, a pressure switch with exposed wiring terminals) shall be installed in an enclosure of the required NEMA rating for the location. The enclosure shall have a nameplate with the instrument tag name.

3.19 NEW BOILER GAUGE PANELS FIELD MODIFICATIONS

A. All new Boiler Gauge Panels shall be field modified to remove existing Eye Hye indicators from existing panels and reinstall in the panel cutout space provided on the new panels. Also relocate the corresponding existing Eye Hye controllers to the new panels. See Section 40 94 23, BOP PLC Specification for additional details.

3.20 SCADA WORKSTATIONS, NETWORK CABINETS AND MISCELLANEOUS DATA LINKS

A. Install all workstations as shown on block diagrams and location plans.

B. Install, terminate and test all supervisory network and other data links as shown on the block diagrams. Any data links going outside the buildings and greater than 100 meters in lengths shall be single mode fiber optic links furnished with all required media converters, patch panels and connectors.

C. Install all dedicated data links between the SCADA network and miscellaneous existing equipment as shown on the block diagrams and specified in the following Specification sections:

1. Section 40 94 23, BOP and Boiler Common Draft PLC.
2. Section 40 94 25, Interface between Turbine PLC and Governors.

D. Local control cabinets shall be tied into the local SCADA ring net entry point

3.21 INSTRUMENT ELECTRICAL

A. General:

1. Electrical wiring and equipment shall be installed in accordance with the Project electrical Specifications.
2. Instrument control signal cables and electrical power cables shall only cross at right angles.
3. Care shall be taken in the layout of terminals and the wiring method used to prevent contact between circuits if a wire becomes disconnected.
4. 24V dc control wiring shall not be installed in the same tray, channel or raceway with 120V ac or higher electrical power wiring.

5. Separate parallel runs of 24V dc control signal cables and electrical power cables by a minimum space equal to 1 percent of the length of the run. The separation shall be limited to a minimum of 2 feet.
6. No splices or wire nuts are permitted in the control wiring.

B. Enclosures:

1. Instrument enclosures shall be provided with one of the following types of purging as required by the hazardous area classification:
   a. Type X Purge: Reduces classification within enclosure from Division 1 to nonhazardous.
   b. Type Y Purge: Reduces classification within enclosure from Division 1 to Division 2.
   c. Type Z Purge: Reduces classification within enclosure from Division 1 to nonhazardous.
   d. Bottom entry is preferred. Side entry is permitted if bottom entry is impractical. No top entry is permitted under any circumstances.
2. Power shall be turned on in a purged instrument enclosure only after a four-volume purge (ten volume for enclosures exceeding 10 cubic feet) has been completed and a minimum internal pressure of 0.1inch water column has been established.
3. Ensure requirements of ISA RP12.4 and NFPA 496 are satisfied for hazardous area reductions.

3.22 LOOP CHECKOUT

A. Loop checks (checking for wiring continuity, polarity and instrument functionality) shall be performed by Contractor on all instrumentation and wiring, including skid-mounted equipment.

B. A complete checkout report for the complete loop as opposed to individual loop segments shall be submitted to Owner.

END OF SECTION

INTENTIONALLY LEFT BLANK

SECTION 40 90 40
INSTRUMENTATION AND CONTROL
FOR PACKAGED MECHANICAL EQUIPMENT

PART 1 GENERAL

1.01 OVERVIEW

A. This section specifies technical requirements associated with Instrumentation and Controls for Packaged Mechanical Equipment.

1.02 SCOPE

A. This Specification covers the basic requirements for utility industrial grade products and methods for system instrumentation and controls to ensure that the instrumentation supplied, and its installation meet the Project requirements.

B. All instruments, control valves and control systems shall comply with the requirements of this Specification. Deviations shall be allowed only after written approval for each deviation has been received from the Owner.

C. The selection of all accessories, materials, and methods of fabrication not specifically covered in this Specification, but which are necessary to complete the fabrication of control systems and equipment, shall be carried out in accordance with good engineering practices subject to written approval from the Owner.

D. Related Sections:

1. Section 01 33 00, Submittal Procedures.
2. Section 01 58 53, Project Equipment Identification.
3. Section 01 61 00, Common Product Requirements.
4. Section 40 90 00, I&C General Requirements.
5. Section 40 90 10, Instrumentation and Controls Summary of Work.

1.03 CODES AND STANDARDS

A. The latest edition for all codes and standards referenced in this Specification shall be the edition in effect at the time of Contract award.

B. All control systems and instruments shall be in compliance with the following Codes and Standards, where applicable:

1. American Society of Mechanical Engineers Standard (ASME):
   a. B16.34, Valves-Flanged, Threaded and Welding End.

b. B31.1, Power Piping.
c. PTC-19.2, Pressure Measurement Instruments and Apparatus.
d. PTC-19.3, Temperature Measurement Instruments and Apparatus.
e. PTC-19.3 TW, Thermowells.
f. PTC-19.5, Flow Measurement.

2. ASTM International (ASTM):
   a. E1137, Standard Specification for Industrial Platinum Resistance Thermometers.
3. Institute of Electrical and Electronics Engineers (IEEE):
   a. 1143, IEEE Guide on Shielding Practice for Low Voltage Cables.
   b. 1050, "Guide for Instrumentation and Control Equipment Grounding in Generating Stations".
   c. C 37.1, "Standard Definition, Specification and Analysis used for Supervisory Control, Data Acquisition, and Automatic Control".
   d. C 37.2, "Standard Electric Power System Device Function Numbers and Contact Designations".
   e. C37.90.1, "Standard Surge Withstand Capability (SWC) Tests for Protective Relays and Relay Systems".
4. International Society of Automation (ISA):
   a. MC 96.1, Temperature Measurement Thermocouples.
   b. RP60.6, Nameplates, Labels, and Tags for Control Centers.
   c. 75.01.01, Industrial-Process Control Valves - Part 2-1: Flow capacity - Sizing equations for fluid flow under installed conditions.
   d. 77.70, Fossil Fuel Power Plant Instrument Piping Installation.
   e. ANSI/ISA-5.1, Instrumentation Symbols and Identification.
   f. 20, Specification Forms for Process Measurement and Control Instruments, Primary Elements and Control Valves.
   g. 50.1, Compatibility of Analog Signals for Electronic Industrial Process Instruments.
   h. 51.1, Process Instrumentation Terminology.
5. National Electrical Manufacturers Association (NEMA):
   a. ICS-1, Industrial Control and Systems General Requirements.
   b. ICS-4, Terminal Blocks.
   c. ICS-6, Industrial Control and Systems Enclosures.
   d. 250, Enclosures for Electrical Equipment (1,000 Volts Max).
6. National Fire Protection Association (NFPA): NFPA 70, National Electrical Code.
7. All electronic equipment shall conform to the requirements of FCC Regulation Part 5, Section 15, governing radio frequency electromagnetic interference, and shall be so labeled.
8. HART Communication Foundation:
   a. HART Field Communication Protocol Specifications, Revision 7.0.

1.04 FORBIDDEN MATERIALS

A. No instrumentation or control equipment shall contain mercury or asbestos.

1.05 SUBMITTALS

A. The following types of instrument and controls documentation shall be generated:

1. Process and Instrument Diagrams (P&IDs): Using ANSI/ISA Std. 5.1-2009 symbols and tag numbering to denote instrumentation and controls, including all interfaces with rest of plant equipment.
2. Instrument Location Drawings: Instrument locations shall be shown either on dedicated Instrument Location Drawings or may be shown on Piping Plan Drawings or Electrical Plan Drawings.
3. Instrument Index:
    a. A list of all instruments including tag number, service description, manufacturer, model, type, size, and detailed operating data including ranges and set points.
    b. The instrument index shall also list control valves including tag number, service description, manufacturer, model, type, size, end connections, actuator information, min/normal/max process conditions, C (flow coefficient), and all other pertinent information.
    c. Shall be provided in both hard copy and in Microsoft Excel electronic file format.
4. I/O Lists:
    a. A list of all hardwired inputs and outputs, including: tag number, service description, signal type (AI, AO, DI, DO, TC, RTD, etc.), point characteristics (24V dc, 4-20mA, Type K, 100-Ohm PT, etc.), range (for analog points), signal power source (internal or external), PLC address, alarm setpoints, state descriptors, and other pertinent signal characteristics as required.
    b. For each PLC datalink, a list of soft points (includes calculated values and data comm links) including: tag number, service description, signal type, range, address, alarm setpoints, state descriptors, and other pertinent signal characteristics as required. The list format shall include the array name and point within the array where the datalink point is packed.
    c. Contractor shall include in the data exchange arrays any PLC I/O points requested by other parties and shall request of other parties any PLC I/O points required in the data exchange arrays for completion of their programming.

5. Instrument Installation Drawings: For all instruments and valves shipped loose that will require installation in the field.
6. Complete wiring connection drawings.
7. Control system programming documents:
    a. For all control, monitor, alarm, shutdown or interlock loops.
    b. Logic can be in ladder logic or block diagram form.
    c. Control system logic description shall be used for monitoring and alarm functions.
8. Data Sheets:
    a. Data Sheets shall be provided for all instruments and control valves in ISA-style format, similar to those in ISA-S20 Specification Forms for Process Measurement and Control Instruments, Primary Elements and Control Valves.
9. Provide both the native file and pdf version for each document submitted. Native files are Word, Excel, or AutoCad.

B. PLC Signal Tagging:

1. All hardwired and datalink signals between PLCs shall be assigned a unique tag per the project tagging philosophy.
2. All PLC hardwired and soft datapoint addresses (including array points) shall be documented and submitted for approval prior to the performance of a Factory Acceptance Test (FAT).
    a. Tagging shall comply with Section 01 58 53, Project Equipment Identification.

C. For general Instrumentation and control requirements, see Section 40 90 00, Instrumentation and Controls General Requirements.

1.06 QUALITY ASSURANCE

A. The Contractor shall maintain a quality manual/system which meets the requirements of the applicable international quality system standard appropriate to the contracted Scope of Work throughout the duration of this Contract as well as ISO 9000 requirements.

B. The Contractor quality plan shall be issued for review and for monitoring during the Project. Reporting requirements shall include the Owner/Engineer requirements and additional requirements as stated below.

C. Requirements covered by this Specification shall apply to lower tier Contractors, including Owner/Engineer’s access (accompanied by Contractor) to facilities and records.

D. All materials and hardware to be furnished and all Work to be performed under this Specification shall be subject to review, inspection, and testing as described below.

1.07 WARRANTY AND GUARANTEES

A. Furnish Manufacturer's guarantee or warranty with Owner named as beneficiary in writing as special guarantee.

B. The Manufacturer shall warrant that the equipment shall be supplied in accordance with these Specifications and shall perform as described herein.

C. The Manufacturer shall warrant that the equipment provided shall be free from defects in materials and workmanship for a period of 12 months after system is operational and acceptance by Owner.

D. The Manufacturer shall repair or provide a replacement for any defective component under the warranty provided that any such defect was not the result of misuse of the equipment by the Owner or the Owner's representative.

PART 2 PRODUCTS

2.01 CONTROL PANELS

A. General: See control panel paragraph, in Section 40 90 00, Instrumentation and Control General Requirements.

2.02 CONTROL VALVES/SHUTDOWN VALVES

A. For control valves and shutdown valves requirements see Section 40 92 13, Process Control Valves and Regulators.

2.03 FLOW INSTRUMENTS

A. For Flow instrument requirements see Section 40 91 00, Instrumentation and Control Components.

2.04 LEVEL INSTRUMENTS

A. For Level instrument requirements see Section 40 91 00, Instrumentation and Control Components.

2.05 PRESSURE INSTRUMENTS

A. For Pressure instrument requirements see Section 40 91 00, Instrumentation and Control Components.

2.06 PRESSURE RELIEVING DEVICES

A. For Pressure Relieving Devices requirements, see Section 40 92 13, Process Control Valves.

2.07 TEMPERATURE INSTRUMENTS

A. For Temperature Instruments requirements, see Section 40 91 00, Instruments and Control Components.

2.08 PROGRAMMABLE LOGIC CONTROLLERS (PLC)

A. For PLC requirements see Section 40 91 00, Instrumentation and Controls Components.

PART 3 EXECUTION

3.01 INSTALLATION PRACTICES

A. For installation practices see Section 40 90 00, Instrumentation and Controls General Requirements.

3.02 APPROVED I&C EQUIPMENT SUPPLIERS

A. For approved I&C Equipment suppliers, see Section 40 91 00, Instrumentation and Control Components.

3.03 TESTING AND INSPECTION – GENERAL

A. The Owner reserves the right to witness tests and shall be notified at least 21 days in advance of the tests.

B. Control panels and enclosures shall be tested for proper wiring and operation before shipping.

C. The system shall be subject to Owner witnessed factory and Site acceptance tests. The system shall not be shipped from the place of assembly and configuration until the factory acceptance tests have been deemed to have been passed by the Owner.

D. Certified test reports for the tests performed shall be transmitted to the Owner prior to shipment of the system. When requested by the Owner, the Contractor shall review the test results with them and obtain approval for shipping.

E. Should the system fail a specified factory test or show abnormal results, the Contractor shall immediately inform the Owner. The cause of the problem and the proposed corrective action shall be discussed with the Owner prior to the implementation of corrective actions. After the problem is corrected, the specific system function shall be re-tested. All repair details shall be documented and included in the Test Report.

F. The Contractor shall provide to the Owner, full cooperation and assistance in any factory inspection at the Contractor's premises provided reasonable written advance notice has been given to Contractor.

G. A test procedure shall be prepared for each test which shall describe the test to be performed, the applicable item of equipment being tested, the standards and method of testing, and the testing facility's capabilities and shall state a proposed test date.

H. Owner representatives shall participate in formal design reviews at Project kickoff, and at approximately 25 percent and 75 percent completion of control logic and operator graphic development.

3.04 FACTORY DEMONSTRATION TESTS

A. For Factory Demonstration tests, see Sections 40 90 00, Instrumentation and Control General Requirements, 43 12 00, Gas Compressor and 48 11 23, Combustion Turbine Generator.

3.05 SITE ACCEPTANCE TESTING

A. For Site Acceptance Test, see Sections 01 91 14, Equipment Facility Testing and Startup, 40 90 00, Instrumentation and Control General Requirements, 43 12 00, Gas Compressor, and 48 11 23, Combustion Turbine Generator.

3.06 SPARE PARTS

A. Spare parts and special tools required for one year of operation shall be provided per manufacturer's recommendations. Contractor shall submit list of these spare parts and special tools.

B. Spare parts and special tools for construction, commissioning and startup shall be included. Any such parts used during construction or startup shall be replaced.

C. Spare parts and special tools are to be supplied new and unused, packaged separately from the equipment and shipped along with the equipment. A tag shall be attached to each part showing equipment tag number, part name or description and Drawing reference and part item number.

D. Contractor shall submit a list of recommended spare parts for long-term, reliable operation including pricing. Pricing shall be valid until Project closeout and acceptance.

3.07 PROTECTION

A. Protect equipment from construction or accidental damage during the installation period prior to system commissioning and turnover to the Owner.

END OF SECTION

INTENTIONALLY LEFT BLANK

SECTION 40 91 00
INSTRUMENTATION AND CONTROL COMPONENTS

PART 1 GENERAL

1.01 SUMMARY

A. This section gives general requirements for instrumentation and control components.

1.02 REFERENCES

A. The design, equipment, material and installation of the Work shall conform to requirements of the latest edition of the following codes and standards:

1. American National Standard Institute (ANSI).
2. API (American Petroleum Institute):
   a. 505, Classification of Locations for Electrical Installations at Petroleum Facilities Classified as Class I, Zone 0, Zone 1, and Zone 2.
   b. RP 551, Process Measurement Instrumentation.
   c. RP 555, Process Analysers.
   d. STD 607, Fire Test of Soft Seated 1/4 Turn Valves.
   e. SPEC 6FA, Fire Test for Valves.
3. ASME (American Society for Mechanical Engineers):
   a. B16.36, Orifice Flanges.
   b. PTC 19.3, Temperature Measurement.
   c. B1.20.1, Pipe Threads, General Purpose (Inch).
   d. MFC-3M, Measurement of Fluid Flow in Pipes Using Orifice, Nozzle, and Venturi.
4. Institute of Electrical and Electronics Engineers (IEEE).
5. The Instrumentation, Systems, and Automation Society (ISA):
   a. S5.1, Instrument Symbols and Identification.
   b. S5.2, Binary Logic Diagrams for Process Operations.
   c. S5.3, Graphic Symbols for Distributed Controls.
   d. S5.4, Instrument Loop Diagrams.
   e. S5.5, Graphic Symbols for Process Displays.
   f. S18.1, Annunciator Sequences and Specifications.
   g. S20, Specification Forms for Process Measurement and Control Instruments, Primary Elements and Control Valves.
   h. S51.1, Process Instrumentation Terminology.
   i. S75.01, Flow Equations for Sizing Control Valves.
   j. S75.03, Face-to-Face Dimensions for Integral Flanged Globe-Style Control Valve Bodies (ANSI Classes 125, 150, 250, 300, and 600).
   k. ANSI/ISA S75.19.01, Hydrostatic Testing of Control Valves.

6. International Organization for Standardization (ISO):
   a. 5167, Measurement of Fluid Flow by Means of Pressure Differential Devices Inserted in Circular Cross-section Conduits Running Full.
   b. TR 15377, Measurement of fluid flow by means of pressure-differential devices – Guidelines for specification of nozzles and orifice plates beyond the scope of ISO 5167-1.
7. National Electrical Code (NFPA 70 with State amendments).
8. National Electric Safety Code (NESC).
9. National Electric Manufacturers Association (NEMA).
10. National Fire Protection Association (NFPA):
    a. 59A, Standard for the Production, Storage, and Handling of Liquefied Natural Gas (LNG).
    b. 72, National Fire Alarm Code.
    c. 85, Boiler and Combustion Systems Hazards Code.
    d. 86, Standard for Ovens and Furnaces.
11. FCI (Fluid Control Institute): ANSI/FCI 70-2, Control Valve Seat Leakage.
12. UL Rated Components.

PART 2 PRODUCTS

2.01 GENERAL

A. Article Mechanical Systems Components covers requirements of mechanical PIC components that are not specifically referenced by Section 40 90 00, Instrumentation and Control for Process Systems, Instrument Lists or Data Sheets.

B. Article Electrical Components covers requirements for electrical PIC components that are not specifically referenced by Section 40 90 00, Instrumentation and Control for Process Systems, Instrument Lists or Data Sheets.

C. All other Part 2 Articles cover components that are referenced by Instrument Lists or Data Sheets in Section 40 90 00, Instrumentation and Control for Process Systems, or by specific component numbers in other PIC subsections.

2.02 MECHANICAL SYSTEMS COMPONENTS

A. Flow Element, Rotameter, Purge:

1. For air or water service, unless otherwise noted.
2. Materials: Glass tube, fiberglass body, stainless steel float, nylon ball check valve.
3. Direct-Reading Scale Length: 2-1/2 inches, minimum.
4. Scale Ranges: 0 scfh to 2.5 scfh for air service or 0 gph to 10 gph for water service.

5. Integral inlet needle valves.
6. Integral differential pressure regulators:
    a. For water service.
    b. For air service for level ranges greater than 10 feet of water.
7. Rotameters for water service.
8. Manufacturers and Products:
    a. ABB (Fischer & Porter); Series 10A3130.
    b. Brooks; Series DS-1350.
    c. "Or-equal."

B. Manifold, Three-Valve Equalizing:

1. Type: For isolation and equalization of differential pressure transducers.
2. Materials: Stainless steel.
3. Manufacturers and Products:
    a. Anderson, Greenwood and Co.; Type M1.
    b. Swagelock.
    c. Rosemount
    d. "Or-equal."

C. Pressure Gauge: For other than process variable measurement.

1. Dial Size: Nominal 2-inch dial size.
2. Accuracy: 2 percent of span.
3. Scale Range: Such that normal operating pressure lies between 50 percent and 80 percent of scale range.
4. Connection: 1/4-inch NPT through bottom, unless otherwise noted.
5. Manufacturers and Products:
    a. Ashcroft Utility; Gauge Series 1000.
    b. Marsh; Standard Gauge Series.
    c. Ametek U.S.; Gauge Series P500.
    d. Acculite; Series 2000.
    e. "Or-equal."

D. Valve, Needle:

1. Materials: Stainless steel, as recommended by manufacturer for designated service, unless otherwise shown on the Drawings.
2. Size: 0.020-inch orifice.
3. Manufacturers:
    a. Whitey.
    b. Hoke.
    c. Swagelok.
    d. "Or-equal."

E. ON/OFF Valves:

1. Type: Ball valve.

2. Materials: Stainless steel, as recommended by manufacturer for designated service, unless otherwise shown on the Drawings.
3. Manufacturers and Products:
    a. Whitey
    b. Hoke.
    c. Swagelock.
    d. “Or-equal.”

F. Regulating Valves:

1. Type: Needle valves, with regulating stems and screwed bonnets.
2. Materials: stainless steel, as recommended by manufacturer for designated service, unless otherwise shown on the Drawings.
3. Manufacturers:
    a. Whitey.
    b. Hoke.
    c. Swagelock.
    d. “Or-equal.”

G. Valve, Three-Way:

1. Type: Ball valve.
2. Materials: Stainless steel with nylon handle as recommended by manufacturer for designated service, unless otherwise shown on the Drawings.
3. Manufacturers:
    a. Whitey.
    b. Hoke.
    c. Swagelok.
    d. “Or-equal.”

H. Valve, Four-Way:

1. Type: Four-way, two-position ball valve.
2. Materials:
    a. Body and Stem: Type 316 stainless steel.
    b. Handle: Black nylon.
    c. Packing Gland: Teflon.
3. Ball and stem bed, one-piece assembly.
4. Machined handle stops and directional nameplates.
5. Manufacturers:
    a. Whitey.
    b. Hoke.
    c. Swagelok.
    d. “Or-equal.”

I. Spool Valve:

1. Type: Five-port arrangement as shown, two-position, push-to-operate knob attached to the spool stem, and spring return.
2. Materials: Stainless Steel construction with Teflon impregnated aluminum spool, stainless steel spring, and Buna-N O-rings.
3. Port Connection: 1/4-inch outside diameter tube fittings.
4. Manufacturer and Product: Norgren; T71DAOO-TSO-TKO.

J. Test Tap:

1. Manufacturers and Products:
   a. Imperial-Eastman; quick-disconnect couplings No. 292-P and caps No. 259-P.
   b. Crawford Fitting Co.: Swagelok quick-connects Series QC4 and caps QC4-DC.
   c. Parker; CPI Series precision quick couplings.

K. Stainless Steel Tubing: ASTM A312/A312M, Type 316, 0.065-inch wall, seamless, soft annealed, as shown on the Drawings.

L. Stainless Steel Fittings:

1. Compression Type:
   a. Materials: Type 316 stainless steel, ASTM A182/A182M forged bodies or ASTM A276 barstock bodies, flareless.
   b. Manufacturers and Products:
      1) Swagelok tube fittings.
      2) Parker CPI tube fittings; Parker A-LOK dual ferrule tube fittings.
      3) “Or-equal.”
2. Socket Weld Type:
   a. Materials: Type 316 stainless steel, ASTM A182/A182M forged bodies or ASTM A276 barstock bodies, 3,000 psi maximum working pressure, safety factor 4:1.
   b. Manufacturers:
      1) Cajon.
      2) Swagelok.
      3) Parker WELDLOK.
      4) “Or-equal.”

M. Air Set: Consists of a shutoff valve, pressure regulator, discharge pressure gauge, and interconnecting tubing.

N. Purge Set:

1. Parts: Purge rotameter flow element, pressure regulator, pressure gauge, test tap, shutoff valve, spool valve, and interconnecting tubing as shown on the Drawings and as required in this section.
2. Pressure Gauge Scale Range: 150 percent of the process variable.
3. Mounting:
    a. Within consoles, panels, or a separate enclosure as shown.
    b. For separate enclosure mounted purge sets, refer to paragraphs Nonfreestanding Panel Construction and Factory Finishing for enclosure requirements.

O. Tubing Raceways:

1. Cable tray systems complete with tees, elbows, reducers, and covers.
2. Size in accordance with manufacturer's recommendations for intended service.
3. Materials: Galvanized steel or aluminum brass as recommended by manufacturer for designated service, unless otherwise shown on the Drawings.
4. Manufacturers:
    a. Globetray.
    b. Cope.
    c. "Or-equal."

P. Air Supply Sets:

1. Parts: Integrally Mounted:
    a. Pressure Controls: Automatic START/STOP, factory set at 30 psig to 50 psig.
    b. Valves: Manual drain, manual shutoff, pressure relief, and check valve.
    c. Pressure gauge.
    d. Inlet filter muffler.
    e. Power: 120V ac.
    f. Compressor: Oilless, single cylinder, rated for at least 1 scfm at 50 psig.
    g. Manufacturers and Products:
        1) ITT Pneumotive; GH Series.
        2) Gast.
2. Simplex Air Supply Sets:
    a. Air Receiver: 2 gallons.
    b. Compressors: One.
3. Duplex Air Supply Sets:
    a. Air Receiver: 20 gallons.
    b. Compressors: Two.
    c. Automatic Failover Control: Factory set at 20 psig.

2.03 ELECTRICAL COMPONENTS

A. Terminal Blocks for Enclosures:

1. General:
   a. Connection Type: Screw compression clamp.
   b. Compression Clamp:
      1) Complies with DIN-VDE 0611.
      2) Hardened steel clamp with transversal grooves that penetrate wire strands providing a vibration-proof connection.
      3) Guides strands of wire into terminal.
   c. Screws: Hardened steel, captive, and self-locking.
   d. Current Bar: Copper or treated brass.
   e. Insulation:
      1) Thermoplastic rated for minus 55 degrees C to plus 110 degrees C.
      2) Two funneled shaped inputs to facilitate wire entry.
   f. Mounting:
      1) Standard DIN rail.
      2) Terminal block can be extracted from an assembly without displacing adjacent blocks.
      3) End Stops: Minimum of one at each end of rail.
   g. Wire Preparation: Stripping only permitted.
   h. Jumpers: Allow jumper installation without loss of space on terminal or rail.
   i. Marking System:
      1) Terminal number shown on both sides of terminal block.
      2) Allow use of preprinted and field marked tags.
      3) Terminal strip numbers shown on end stops.
      4) Mark terminal block and terminal strip numbers as shown on panel control diagrams and loop diagrams.
      5) Fuse Marking for Fused Terminal Blocks: Fuse voltage and amperage rating shown on top of terminal block.
   j. Test Plugs: Soldered connections for 18 AWG wire.
      1) Pin Diameter: 0.079 inch.
      2) Quantity: 10, 20, 40 (need two plugs per test meter).
      3) Manufacturer and Product: Entrelec; Type FC2.
      4) “Or-equal.”
2. Terminal Block, General Purpose:
   a. Rated Voltage: 600V ac.
   b. Rated Current: 30 amp.
   c. Wire Size: 24 AWG to 10 AWG.
   d. Rated Wire Size: 10 AWG.
   e. Color: Gray body.
   f. Spacing: 0.25 inch, maximum.
   g. Test Sockets: One screw test socket 0.079-inch diameter.

h. Manufacturer and Product:
   1) Entrelec; Type M4/6.T.
   2) "Or-equal."

3. Terminal Block, Ground:
   a. Wire Size: 24 AWG to 10 AWG.
   b. Rated Wire Size: 10 AWG.
   c. Color: Green and yellow body.
   d. Spacing: 0.25 inch, maximum.
   e. Grounding: Electrically grounded to mounting rail.
   f. Manufacturer and Product:
      1) Entrelec; Type M4/6.P.
      2) "Or-equal."
4. Terminal Block, Blade Disconnect Switch:
   a. Rated Voltage: 600V ac.
   b. Rated Current: 10 amp.
   c. Wire Size: 22 AWG to 10 AWG.
   d. Rated Wire Size: 10 AWG.
   e. Color: Gray body, orange switch.
   f. Spacing: 0.25 inch, maximum.
   g. Manufacturer and Product:
      1) Entrelec; Type M4/6.SNT.
      2) "Or-equal."
5. Terminal Block Diode:
   a. Rated Voltage: 24V dc.
   b. Rated Current: 30 ma.
   c. Wire Size: 16 AWG.
   d. Manufacturer and Product:
      1) Phoenix Contact ST-IN.
      2) "Or-equal."
6. Terminal Block, Fused, 24V dc:
   a. Rated Voltage: 600V dc.
   b. Rated Current: 25 amp.
   c. Wire Size: 22 AWG to 10 AWG.
   d. Rated Wire Size: 10 AWG.
   e. Color: Gray body.
   f. Fuse: 0.25 inch by 1.25 inches.
   g. Indication: LED diode 24V dc.
   h. Spacing: 0.512 inch, maximum.
   i. Manufacturer and Product:
      1) Entrelec; Type ML10/13.SFD.
      2) "Or-equal."
7. Terminal Block, Fused, 120V ac:
   a. Rated Voltage: 600V ac.
   b. Rated Current: 25 amp.
   c. Wire Size: 22 AWG to 10 AWG.
   d. Rated Wire Size: 10 AWG.
   e. Color: Gray body.

f. Fuse: 0.25 inch by 1.25 inches.
g. Indication: Neon lamp, 110V ac.
h. Leakage Current: 1.8 mA, maximum.
i. Spacing: 0.512 inch, maximum.
j. Manufacturer and Product:
1) Entrelec; Type ML10/13.SFL.
2) "Or-equal."

8. Terminal Block, Fused, 120V ac, High Current:
a. Rated Voltage: 600V ac.
b. Rated Current: 35 amps.
c. Wire Size: 18 AWG to 8 AWG.
d. Rated Wire Size: 8 AWG.
e. Color: Gray.
f. Fuse: 13/32 inch by 1.5 inches.
g. Spacing: 0.95 inch, maximum.

9. Manufacturer and Product:
a. Entrelec; Type MB10/24.SF.
b. "Or-equal."

B. Relays:

1. General:
a. Relay Mounting: Plug-in type socket.
b. Relay Enclosure: Furnish dust cover.
c. Socket Type: Screw terminal interface with wiring.
d. Socket Mounting: Rail.
e. Provide holddown clips.

2. Signal Switching Relay:
a. Type: Dry circuit.
b. Contact Arrangement: 2 Form C contacts.
c. Contact Rating: 5 amps at 24V dc and 120V ac.
d. Contact Material: Gold or silver.
e. Coil Voltage: As noted or shown.
f. Coil Power: 0.9 watt (dc), 1.2VA (ac).
g. Expected Mechanical Life: 10,000,000 operations.
h. Expected Electrical Life at Rated Load: 100,000 operations.
i. Indication Type: Neon or LED indicator lamp.
j. Seal Type: Hermetically sealed case.
k. Manufacturer and Product:
1) Tyco Electronics (Potter and Brumfield); Series KH/KHA.
2) "Or-equal."

3. Control Circuit Switching Relay, Nonlatching:
a. Type: Compact general purpose plug-in.
b. Contact Arrangement: 3 Form C contacts.
c. Contact Rating: 10A at 28V dc or 120V ac, and 6.6A at 240V ac.
d. Contact Material: Silver cadmium oxide alloy.
e. Coil Voltage: As noted or shown.

f. Coil Power: 1.8 watts (dc), 2.7VA (ac).
g. Expected Mechanical Life: 10,000,000 operations.
h. Expected Electrical Life at Rated Load: 100,000 operations.
i. Indication Type: Neon or LED indicator lamp.
j. Push-to-test button.
k. Manufacturer and Product:
    1) TE Connectivity (Potter and Brumfield); Series KUP.
    2) "Or-equal."

4. Control Circuit Switching Relay, Latching:
    a. Type: Dual coil mechanical latching relay.
    b. Contact Arrangement: 2 Form C contacts.
    c. Contact Rating: 10A at 28V dc or 120V ac.
    d. Contact Material: Silver cadmium oxide alloy.
    e. Coil Voltage: As noted or shown.
    f. Coil Power: 2.7 watts (dc), 5.3VA (ac).
    g. Expected Mechanical Life: 500,000 operations.
    h. Expected Electrical Life at Rated Load: 50,000 operations.
    i. Manufacturer and Product:
        1) TE Connectivity (Potter and Brumfield); Series KB/KBP.
        2) "Or-equal."
5. Control Circuit Switching Relay, Time Delay:
    a. Type: Adjustable time delay relay.
    b. Contact Arrangement: 2 Form C contacts.
    c. Contact Rating: 10A at 30V dc or 277V ac.
    d. Contact Material: Silver cadmium oxide alloy.
    e. Coil Voltage: As noted or shown.
    f. Operating Temperature: Minus 10 degrees C to 55 degrees C.
    g. Repeatability: Plus or minus 2 percent.
    h. Delay Time Range: Select range such that time delay setpoint fall between 20 percent to 80 percent of range.
    i. Time Delay Setpoint: As noted or shown.
    j. Mode of Operation: As noted or shown.
    k. Adjustment Type: Integral potentiometer with knob external to dust cover.
    l. Manufacturer and Products:
        1) TE Connectivity (Potter and Brumfield); Series CB for 0.1-second to 100-minute delay time ranges, Series CK for 0.1-second to 120-second delay time ranges.
        2) "Or-equal."

C. Surge Suppressors:

1. General:
    a. Construction: First-stage, high-energy metal oxide varistor and second-stage, bipolar silicon avalanche device separated by series impedance; includes grounding wire, stud, or terminal.
    b. Response: 5 nanoseconds maximum.

c. Recovery: Automatic.
d. Temperature Range: Minus 20 degrees C to plus 85 degrees C.
e. Enclosure Mounted: Encapsulated inflame retardant epoxy.

2. Suppressors on 120V ac Power Supply Connections:
   a. Occurrences: Tested and rated for a minimum of 50 occurrences of IEEE C62.41 Category B test waveform.
   b. First-Stage Clamping Voltage: 350 volts or less.
   c. Second-Stage Clamping Voltage: 210 volts or less.
   d. Power Supplies for Continuous Operation:
      1) Four-Wire Transmitter or Receiver: Minimum5 amps at 130V ac.
      2) All Other Applications: Minimum 30 amps at 130V ac.
3. Suppressors on Analog Signal Lines:
   a. Test Waveform: Linear 8-microsecond rise in current from 0 amps to a peak current value followed by an exponential decay of current reaching one-half the peak value in 20 microseconds.
   b. Surge Rating: Tested and rated for 50 occurrences of 2,000-amp peak test waveform.
      1) DC Clamping Voltage: 20 percent to 40 percent above operating voltage for circuit.
      2) DC Clamping Voltage Tolerance: Plus or minus 10 percent.
      3) Maximum Loop Resistance: 18 ohms per conductor.
4. Manufacturers and Products:
   a. Analog Signals Lines: Emerson Edco PC-642 or SRA-64 series.
   b. 120V ac Lines: Emerson Edco HSP-121.
   c. Field Mounted at Two-Wire Instruments:
      1) Encapsulated in stainless steel pipe nipples.
      2) Emerson Edco SS64 series.
   d. Field Mounted at Four-Wire Instruments: With 120V ac outlet, ac circuit breaker, and 10-ohm resistors on signal lines, all in enclosure.
      1) Enclosure:
         a) NEMA 4X fiberglass, Type 316 stainless steel with door.
         b) Maximum Size: 12 inches by 12 inches by 8 inches deep.
      2) Emerson Edco; SLAC series.

D. Power Supplies:

1. Furnish as required to power instruments requiring external dc power, including two-wire transmitters and dc relays. Provide dual power supplies with diode auctioneered outputs.
2. Convert 120V ac, 60-Hz power to dc power of appropriate voltage(s) with sufficient voltage regulation and ripple control to assure that instruments being supplied can operate within their required tolerances.
3. Provide output over voltage and over current protective devices to:

a. Protect instruments from damage due to power supply failure.
b. Protect power supply from damage due to external failure.

4. Enclosures: NEMA 1.
5. Mount such that dissipated heat does not adversely affect other components.
6. Fuses: For each dc supply line to each individual two-wire transmitter.
   a. Type: Indicating.
   b. Mount so fuses can be easily seen and replaced.
   c. UL 508 Listed required.

E. Intrinsic Safety Barriers:

1. Intrinsically Safe Relays: Monitor discrete signals that originate in hazardous area and are used in a safe area.
   a. Manufacturer and Product: MTL, Inc.; Series MTL 5000.
2. Intrinsically Safe Barriers: Interface analog signals as they pass from hazardous area to safe area.
   a. Manufacturer and Product: MTL, Inc.; Series MTL 5000.

2.04 PROGRAMMABLE LOGIC CONTROLLERS, FIELDBUS AND NETWORK COMPONENTS

A. The following criteria apply to PLC- (programmable logic controller) based, control packages required for general, such as Plant Scada System (PSS), or specific self-contained purpose based control package system(s). All deviations shall be approved in writing by the Engineers.

B. All PLC systems shall conform to the requirements of Section 25 05 11, Cybersecurity for Facility Related Control Systems and its associated datasheet.

C. PLC systems shall include the processor, I/O modules, module power supplies, analog I/O power supply, digital input wetting power supplies, operator interface, programming terminal, data highway hardware, datalink communication interface (as applicable), programming software, and runtime application software. All software, including programming licenses and operating licenses, is to be provided with the PLC such that no additional software shall need to be purchased by Others to program, test, or operate the equipment.

D. Where shown on the Drawings and specified in detailed Specifications, provide redundant PLC Systems.

A. PLC’s may be redundant Allen-Bradley, or Owner approved equal processors for the main BOP PLC. Non-critical systems may be Allen-Bradley or Owner approved equal simplex processors. Equipment with highly standardized controllers such as instrument air compressors and CEMS may be manufacturer standard but Allen-Bradley is preferred. Fuel oil pump skids and

other custom designed equipment may use Allen-Bradleyor “Owner approved equal.”

B. Software for Allen-Bradley shall be Studio 5000 Logix Designer. For OIT/HMI, software shall be “Ignition” or “Owner approved equal.”

C. Spares:

1. PLCs shall have at least 20 percent spare I/O of each type.
2. PLCs shall have at least 20 percent spare I/O rack slots for future cards.
3. PLC Processor untilization shall not exceed 80% (20% spare time per controller).
4. PLC power supplies shall have at least 20 percent spare capacity.
5. PLC control panels shall have at least 20 percent spare terminal blocks for landing of field wiring.
6. PLC control panels shall have at least 20 percent spare space for installation of future equipment.

D. All PLC systems shall communicate with each other or with the PSS as shown on the Drawing IC100, Conceptual architectural network drawing.

E. All PLCs shall have Fiber Optic/Ethernet Media Converters and patch panels in the PLC control panel for connections as shown on the network drawings. Converters shall accept s single mode 8.2/125 micron core/cladding fiber depending on the application. The media converters shall be powered from the PLC control panel’s internal power distribution system.

F. The PLC shall provide an alarm for any power supply failure. Alarms shall also be provided for any processor and I/O module failures.

G. Analog and discrete inputs which are powered from sources external to the PLC system shall be isolated. Minimum acceptable common mode isolation voltage is 250 volts.

H. Operator interface computers in control rooms and similarly climate-controlled areas shall be desktop PC type with the following features as a minimum (Owner will provide ONLogic PC’s with initial setup by IT) (Setup means SWBNO will provide a PC with the latest Windows LTSC licensing. Additional licensing to facilitate a fully functional system shall be the responsibility of the Contractor to provide):

1. i7 Intel® processor, 8 cores, 4.8 GHz turbo 24MB Cache.
2. 8 GB, DDR3 RDIMM Memory, 1333 Mhz, ECC (Four 2GB DIMMs).
3. Four DMS59, 1 TB 3.5-inch SATA, 7.2K rpm Hard Drives per HMI workstation; configured for 2x RAID 1.
4. Two, 10/100/1000 Ethernet card with appropriate Ethernet Driver supporting 802.3ad.

5. Dedicated GPIU capable of supporting at least 2 monitors and includes HDMI and Display Port outputs.
6. Standard keyboard and mouse USB 3.0 port.
7. All cables necessary for the PCMS installation to function correctly.
8. Where shown on the Drawings and specified in detailed Specifications provide redundant computers with hot back up.
9. Windows Operating System, version as required to support PLC and HMI software. Owner is currently at Windows 10 Enterprise LTSC.

I. Operator interface computers on the plant floor shall be panel mount industrial PCs with touchscreen display and shall be suitable for the environment in which they are installed (NEMA 4X minimum for explosion proof for Class I Division 2 Group D areas, NEMA 12 for indoor plant).

1. Display Size: 17 inch.
2. Display Type: Color TFT LCD, 1024 x 768 XGA, 18-Bit Color Graphics.
3. Memory: 5GB RAM min and 250GB SSD Storage Min, 80MB NonVolatile Storage for Applications.
4. Secure Digital (SD) Card Slot: One.
5. Operating Temperature: 32-131F.
6. Relative Humidity: 5-95 percent Non-condensing.
7. Communication Ports:
   a. 2 - 10/100/1000Base-T Ethernet Ports (supports Star, Linear, or Device Level Ring Topology).
   b. 1 – 10/100Base-T Ethernet Port (with IEEE 1588 support).
   c. 1 – USB-A and 1 – USB-B.
   d. Network ports shall support Modbus TCP IP Protocol.

J. Network Switches (Provided by Contractor):

1. Ethernet Switch (ESW):
   a. Full compliance with IEC 61000 6-2 and 6-4.
   b. Supports 10Mbit/s Ethernet, 100Mbit/s Fast Ethernet and 1000Gbit/s Gigabit Ethernet via RJ45 connectors and Ethernet SFP Fiber Ports.
   c. Power: 120V ac.
   d. Port as required to provide two spare copper ports.
2. Manufacturers:
   a. CISCO 9200 Catalyst Series unless Owner furnished. See BOM/DOR.
   b. “Or-equal.”

2.05 I&C COMPONENTS

A. Conductivity Element and Transmitter:

1. General:

a. Function: Measure, indicate, and transmit conductivity of noted process liquid.
b. Sensor Type: Probe with either electrode or electrodeless sensor, as noted.
c. Transmitter Type: Either two wire or four wire, as noted.
d. Parts: Element, transmitter, interconnecting cable, junction box (if specified) and expendables.

2. Performance:
   a. Process Liquid: As noted.
   b. Process Range: As noted.
   c. Accuracy: Plus or minus 0.5 percent of measured range.
3. Features: Temperature Compensation: Automatic thermocompensator for process liquid temperatures 0 degrees to 200 degrees C.
4. Element:
   a. Type: Electrode, unless otherwise noted.
   b. Electrode Material: Type 316 stainless steel or titanium, unless otherwise noted.
   c. Other Wetted Parts: Type 316 stainless steel or nonmetallic synthetic materials; manufacturer to confirm material compatibility with process liquid.
   d. Probe Constant: As noted.
   e. Process Connection: Insertion, 3/4-inch NTP, unless otherwise noted.
   f. Mounting Hardware: As recommended by manufacturer for specific application and as shown on the Drawings.
5. Transmitter:
   a. Type: Four wire, unless otherwise noted.
   b. Features:
      1) Indicator: LCD Back-lit digital display.
      2) Scale Range: As noted.
      3) Contact Setpoint: Setpoint adjustable from 0 percent to 100 percent of full range, initial setting as noted.
   c. Signal Interface:
      1) Output: Isolated 4 mA to 20 mA dc for load impedance 0 ohm to 500 ohms minimum for 24V dc supply without load adjustments.
      2) Digital Communications: As noted.
      3) Contacts:
         a) When noted, SPST rated 3A continuous at 120V ac, minimum.
         b) Setpoint, as noted.

d. Enclosure:
    1) Type: NEMA 4X/IP65.
    2) Mounting:
        a) Wall, unless otherwise noted.
        b) Mounting brackets.
e. Power:
    1) Four-wire: 115V ac, unless otherwise noted.
    2) Two-wire: Loop powered.
f. Additional Features:
    1) TPC or PID Control: If noted.
    2) HART Communication: If noted.
    3) FM Approved Class I, Division 2: If noted or shown.
    4) FM Approved Class I, Division 1: If noted or shown.

6. Cable: Length as required to accommodate device locations.
7. Junction Box (weatherproof): If noted.
8. Expendables (for Each Unit Provided): One 16-oz bottle 2,000 microS/cm conductivity standardizing solution if appropriate for noted range.
9. Manufacturers and Products (Four-Wire Units):
    a. Rosemount Analytical:
        1) Electrode Type: Model 400 series conductivity element and Model 54eC transmitter.
        2) Electrodeless Type: Model 228 series electrodeless conductivity element and Model 54eC transmitter.
    b. Foxboro:
        1) Electrode Type: Model 871CR contacting conductivity element and Model 875CR transmitter.
        2) Electrodeless Type: Model 871EC electrodeless conductivity element and Model 875EC transmitter.
    c. Hach—GLI International:
        1) Electrode Type: Model 3400 series contacting conductivity element and Model C53 series transmitter.
        2) Electrodeless Type: Model 3700E series electrodeless conductivity element and Model E53 series transmitter.
    d. Endress+Hauser:
        1) Electrode Type: Model W/H CLS XX contacting conductivity element and Model Mycom S CLM 153 transmitter.
        2) Electrodeless Type: Model InduMax P CLS 50 electrodeless conductivity element and Model Mycom S CLM 153 transmitter.
10. Manufacturers and Products (Two-Wire Units):
    a. Rosemount Analytical:
        1) Electrode Type: Model 400 series conductivity element and Model 5081C transmitter.
        2) Electrodeless Type: Model 228 series electrodeless conductivity element and Model 5081T transmitter.

b. Foxboro:
   1) Electrode Type: Model 871 CR series contacting conductivity element and Model 870ITCR series transmitter.
   2) Electrodeless Type: Model 871 EC series electrodeless conductivity element and Model 870ITEC transmitter.
c. Hach GLI International:
   1) Electrode Type: Model 3400 series conductivity element and Model Pro C3 transmitter.
   2) Electrodeless Type: Model 3700E series electrodeless conductivity element and Model Pro E3 transmitter.
d. Endress+Hauser:
   1) Electrode Type: Model W/H CLS XX series conductivity element and Model Liquiline M CM42 transmitter.
   2) Electrodeless Type: Model InduMax P CLS 50 series electrodeless conductivity element and Model Liquiline M CM42 transmitter.
e. "Or-equal."

B. ORP Element and Transmitter:

1. General:
   a. Function: Measure, indicate, and transmit ORP of process fluid.
   b. Parts: Element, analyzer/transmitter, interconnecting cable, and noted ancillaries.
2. Performance:
   a. Element:
      1) Process Range: If and as noted.
      2) Range: Minus 1500 to plus 1500 mV.
      3) Operating Temperature: 32 degrees F to 185 degrees F.
      4) Operating Pressure: 100 psig maximum at 149 degrees F.
   b. Analyzer/Transmitter:
      1) Range: Minus 1400 mV to plus 1400 mV.
      2) Accuracy: Plus or minus 1 mV.
      3) Repeatability: Plus or minus 1 mV.
      4) Stability: Plus or minus 1 mV per month, noncumulative.
      5) Operating Temperature: Minus 32 degrees F to plus 122 degrees F.
      6) Operating Humidity: 95 percent maximum; relative humidity, noncondensing.
3. Element:
   a. Process Connection: 1-inch MNPT.
   b. Body Style: Convertible with 1-inch NPT on both ends.
   c. Process Fluid: As noted.
   d. Wetted Materials: Compatible with process fluid.
   e. No field-replaceable parts, unless otherwise noted.

f. Electrode Type: Flat glass or general purpose, unless otherwise noted.
g. Integral Preamplifier: Required, unless otherwise noted.
h. Mounting/Process Connections: As shown on the Drawings or as noted from among the following:
    1) Submersion:
        a) Sensor handrail assembly.
        b) Handrail mounting kit.
    2) Flow-through:
        a) 3/4-inch NPT PVC tee.
        b) 1-inch NPT PVC tee.
        c) 1-1/2-inch NPT PVC tee.
    3) Insertion.
    4) Hot-Tap Retractable:
        a) Suitable for 64-psig line pressure, unless otherwise noted.
        b) 1-1/4-inch ball valve kit, unless otherwise noted.
        c) Titanium Tube: 21 inches (12-inch insertion), unless otherwise noted.
i. Suitable for installation in Class I Div 2 hazardous locations: If noted or shown.

4. Analyzer/Transmitter:
    a. Display: Graphic LCD, with backlighting.
    b. Signal Interface:
        1) Analog Outputs: Two isolated 4 mA to 20 mA dc outputs (ORP and temperature).
        2) Discrete Outputs:
            a) Process Alarms: Two SPSTs minimum, normally open.
            b) Sensor/Analyzer and Process Fault Alarm: SPDT.
            c) Contact Rating: 120 volts, 5 amps, resistive.
    c. Enclosure.
        1) Type: NEMA 4X.
        2) Suitable for panel, 2-inch pipe, or wall mounting.
            a) Wall and 2-inch mounting kit, unless otherwise noted.
    d. Power: 115V ac, 50/60-Hz, unless otherwise noted.
    e. Interconnecting Cable: Length as required.
    f. Suitable for installation in Class I Div 2 hazardous locations: If noted or shown.
5. Expendables (for each unit provided):
    a. Chemicals:
        1) ORP reference solution.
        2) 32 ounces, minimum.
6. Accessories:
    a. Junction Box: If noted.
        1) NEMA 4X box for cable extension.

b. Rosemount Analytical; Model 399 (water), Model 396P (wastewater), or Model 396R (retractable) sensor and Model 54e ORP analyzer.
c. Hach; Digital Differential ORP sensor and sc100 controller.
d. Foxboro; 871A series ORP sensor and Model 875PH Intelligent Analyzer.
e. "Or-equal."

C. pH Element and Transmitter:

1. General.
   a. Function: Measure, indicate, and transmit pH of process fluid.
   b. Parts: Element, analyzer/transmitter, interconnecting cable, and noted ancillaries.
2. Performance:
   a. Element:
      1) Range: 0 pH to 14 pH.
      2) Operating Temperature: 32 degrees F to 158 degrees F.
      3) Operating Pressure: 80 psig maximum at 149 degrees F.
   b. Analyzer/Transmitter:
      1) Range: 0 pH to 14 pH units.
      2) Accuracy: Plus or minus 0.02 pH units.
      3) Repeatability: Plus or minus 0.05 pH units.
      4) Stability: Plus or minus 0.01 pH units per month, noncumulative.
      5) Operating Temperature: Minus 4 degrees F to plus 104 degrees F.
      6) Operating Humidity: 5 percent to 95 percent; relative humidity, noncondensing.
3. Element:
   a. Process Connection: 1-inch MNPT.
   b. Body Style: Convertible with 1-inch NPT on both ends.
   c. Process Fluid: As noted.
   d. Wetted Materials: Compatible with process fluid.
   e. No field-replaceable parts, unless otherwise noted.
   f. Electrode Type: Flat glass or general purpose, unless otherwise noted.
   g. Integral Preamplifier: Required, unless otherwise noted.
   h. Mounting/Process Connections: As shown on the Drawings or as noted from among the following:
      1) Submersion:
         a) Sensor handrail assembly.
         b) Handrail mounting kit.
      2) Flow-through:
         a) 3/4-inch NPT tee.
         b) 1-inch NPT tee.
         c) 1-1/2-inch NPT tee.

3) Insertion.
4) Hot-Tap Retractable:
a) Suitable for 64-psig line pressure.
b) 1-inch ball valve kit.
c) Titanium Tube: 21 inches (12-inch insertion).

i. Suitable for installation in Class I Div 2 hazardous locations: If noted or shown.
1) Install in accordance with manufacturer's instructions and applicable codes.

4. Analyzer/Transmitter:
a. Display: Graphic LCD, with backlighting.
b. Signal Interface:
1) Analog Outputs: Two isolated 4 mA to 20 mA dc outputs (pH and temperature).
2) Discrete Outputs:
a) Process Alarms: Two SPSTs minimum, normally open.
b) Sensor/Analyzer and Process Fault Alarm: SPDT.
c) Contact Rating: 120 volts, 5 amps, resistive.
c. Enclosure:
1) Type: NEMA 4X.
2) Suitable for panel, 2-inch pipe, or wall mounting.
d. Power: 115V ac, 50/60-Hz, unless otherwise noted.
e. Interconnecting Cable: Length as required.
f. Suitable for installation in Class I Div 2 hazardous locations: If noted or shown.

5. Expendables (for each unit provided):
a. Chemicals: 1 pint each of buffer solution for pH 4, pH 7, and pH 9.

6. Accessories:
a. Junction Box: If noted.
1) NEMA 4X box for cable extension.
b. Rosemount Analytical; Model 399 (water), or Model 396R (retractable) sensor and Model 1056 pH analyzer.
c. Hach; Digital Differential pH sensor and sc100 controller.
d. Foxboro; 871A series pH sensor and Model 875 pH Intelligent Analyzer.
e. "Or-equal."

D. Dissolved Oxygen Element and Transmitter:

1. General:
a. Function: Continuous measurement of dissolved oxygen (DO) concentration of process fluid.
b. Type: Luminescent or fluorescence sensor.
c. Parts: Element (sensor), transmitter (analyzer), external power supply, interconnecting cable, mounting hardware, and ancillaries.

2. Performance:
    a. Range: 0 to 20 ppm.
    b. Sensor Accuracy:
        1) Measurement: Plus or minus 0.2 percent of span.
        2) Temperature: Plus or minus 0.2 degrees C.
    c. Response Time: Less than 40 seconds to 90 percent of value upon step change.
3. Element:
    a. Luminescent or fluorescent sensor.
    b. Process Temperature Range: 32 degrees F to 122 degrees F.
    c. Submersion Depth: 350 feet maximum.
    d. Sensor Cable: Integral 33 feet of cable. Provide additional length as required.
    e. Junction Box: Provide junction or termination box and extension cable as required.
    f. Mounting: 1-1/2 UNF - 12 UNF thread.
4. Transmitter:
    a. Display:
        1) Graphic dot matrix LCD to display DO.
        2) Auxiliary Readout:
            a) Temperature.
            b) Diagnostic warnings.
            c) Error messages.
            d) Other information.
    b. Ambient Conditions:
        1) Temperature minus 4 degrees F to plus 140 degrees F.
        2) Humidity: 0 to 95 percent, relative, noncondensing.
    c. Signal Interface:
        1) Analog Output:
            a) Two isolated 4 mA to 20 mA dc for load impedance up to 500 ohms.
            b) Either output configurable for DO or temperature.
        2) Relay Outputs:
            a) Three SPST; 5 amps resistive, 115V ac/230V ac/30V dc.
            b) Each relay assignable to either DO or temperature.
            c) Function:
                (1) Control: Settings for fail safe on/off, high/low phasing, setpoint, deadband, and on/off displays.
                (2) Alarm: Settings for fail safe on/off, high alarm point, high alarm point deadband, low alarm point, low alarm point deadband, and on/off relays.
        3) Serial Communication: If and as noted.
    d. Enclosure: NEMA 4X/IP66 polycarbonate/aluminum.

e. Mounting Hardware: Suitable to support panel, surface, horizontal pipe, and vertical pipe mounting.
f. Power Requirements: 120V ac, 60-Hz.
g. Stainless steel equipment tag.

5. Accessories:
   a. Unless otherwise noted, provide submersion mounting hardware and mounting bracket as required to perform appropriate installation.
   b. Provide sun shield for transmitter display.
6. Manufacturers and Products:
   a. Hach; sc100 LDO Analysis System.
   b. Insite IG; Model 1000 Dissolved Oxygen Analyzer.
   c. Environmental Instruments; FL-3 Dissolved Oxygen Analyzer.
   d. Royce Technologies; Model 98/9810 Dissolved Oxygen Sensor/Analyzer.
   e. "Or-equal."

E. Flow Element, Orifice:

1. General:
   a. Function: Measure flowrate.
   b. Type:
      1) Differential pressure producer.
      2) Paddle type concentric orifice plate.
   c. Parts: Orifice plate, orifice flanges, and ancillaries.
2. Service:
   a. Process Fluid: Water, unless otherwise noted.
   b. Process Temperature: As noted.
   c. Process Pressure (Upstream): As noted.
3. Performance:
   a. Flow Range: As noted.
   b. Pressure Differential at Maximum Flow: Approximately as noted.
   c. Machine orifice flanges in accordance with:
      1) ANSI B16.35, Steel Orifice Flanges.
      2) ANSI/API 2530 (AGA #3).
4. Supporting Calculations: Furnish supporting calculations to Engineer for review. As minimum, include the following:
   a. Minimum and maximum flow rates.
   b. Differential pressures at minimum and maximum flow rates.
   c. Inside diameter of actual pipe used on Project.
   d. Plate size and hole diameter.
   e. Process pressure and temperature at maximum flow rate.
   f. Viscosity.
   g. Molecular weight or specific gravity (gases).
   h. Specific gravity (liquids).
   i. Super compressibility (gases).

5. Orifice Plate:
    a. Materials: Type 304 stainless steel, unless otherwise noted.
    b. Paddle type handle.
    c. Concentric.
6. Flanges:
    a. Flange (Line) Size: As noted.
    b. Materials: Carbon steel, unless otherwise noted.
    c. Type: Raised face slip-on, unless otherwise noted.
    d. Class 300 (740 psig rating), unless otherwise noted.
7. Ancillaries:
    a. Pressure Taps: 1/2-inch NPT, unless otherwise noted.
    b. Gaskets for Orifice Plate: Nonasbestos.
    c. Fasteners:
        1) Steel stud bolts.
        2) Carbon steel hexagonal nuts.
        3) Carbon steel jack screws.
8. Manufacturers and Products:
    a. Daniel Flow Products, Inc., Houston, TX; Orifice Flanges (Catalog P) with Paddle Type Orifice Plate, Catalog 520.
    b. Fluidic Techniques, Mansfield, TX; Orifice Flanges with Series 120 Paddle Type Orifice Plate.
    c. “Or-equal.”

F. Flow Element, Pitot-Static, Annubar:

1. General:
    a. Function: Produce pressure differential signal proportional to the square of the flow rate in a pipeline.
    b. Type: Multiple port, pitot-static differential pressure producing device.
    c. Parts: Flow element and mounting hardware.
2. Service:
    a. Fluid: Water, unless otherwise noted.
    b. Upstream Fluid Temperature: As noted.
    c. Upstream Static Pressure: As noted.
3. Performance:
    a. Flow Range: As noted.
    b. Pressure Differential at Full Scale Flow: Approximately as noted.
    c. Accuracy: As noted.
    d. Permanent Pressure Loss (Head Loss): As noted.
    e. Repeatability: Plus or minus 0.1 percent.
4. Flow Element Calculations: Verify actual inner pipe diameter and provide supporting calculations showing expected pressure differential at full scale flow and permanent head loss.
5. Features:
    a. Pitot Ports: Located across pipe diameter such that differential pressures of multiple sensing ports are sensed and averaged.

b. Element Material: Type 316 stainless steel, unless otherwise noted.
c. Pipe Size (ID and OD): As noted.
d. Pipe Schedule and Material: As noted.

6. Element Connections:
   a. Process Connections:
      1) Type: Weld fitting and compression ferrule, unless otherwise noted.
      2) Material: Carbon steel, unless otherwise noted.
   b. Instrument Connections: 1/4-inch NPT, unless otherwise noted.
7. Manufacturer and Product:
   a. Emerson Process Management, Rosemount Division; 485 Annubar.
   b. "Or-equal."

G. Flow Transmitter – Differential Pressure:

1. General:
   a. Function:
      1) Measure differential pressure.
      2) Transmit signal proportional to square root of differential pressure, as applicable.
   b. Type:
      1) Electronic variable capacitance or silicon strain gauge.
      2) Two-wire transmitter; "smart electronics". Hart compatible.
   c. Parts: Transmitter and accessories.
2. Performance:
   a. Range: As noted.
      1) Select transmitter's factory upper range limit (URL) such that upper boundary of noted range is as close as possible to 80 percent of factory URL, but does not exceed it.
   b. Accuracy: Plus or minus 0.10 percent of span, unless otherwise noted.
   c. Ambient Operating Temperature: Minus 40 degrees F to plus 175 degrees F, with integral meter.
   d. Process Operating Temperature: Minus 40 degrees F to plus 250 degrees F.
   e. Humidity: 0 to 100 percent relative humidity.
   f. Hazardous Location Certifications: If and as noted.
3. Features:
   a. Linear or square-root output, user-configurable.
   b. Factory preconfigure for square root output if transmitter tagged as "FT" or "FIT".
   c. Adjustable damping.
   d. LCD indicator, unless otherwise noted.
      1) Display in either percent or engineering units, field configurable.

e. Wetted Metallic Parts: Type 316 stainless steel, unless otherwise noted.
   1) Includes drain/vent valves, process flanges and adapters, and process isolating diaphragm.
f. Wetted O-Rings: Glass-filled TFE, graphite-filled PTFE, or Viton, unless otherwise noted.
g. Bolts and Nuts (if required): Type 316 stainless steel, unless otherwise noted.
h. Fill Fluid: Silicone, unless otherwise noted.

4. Process Connections:
   a. Line Size: 1/2 inch.
   b. Connection Type: FNPT.
   c. Direct/remote Diaphragm Seal: If and as noted.
5. Signal Interface:
   a. 4 mA to 20 mA dc output with digital signal based on HART protocol, unless otherwise noted below.
      1) Nominal Maximum Loop Resistance with External 24V dc Power Supply: 550 ohms.
   b. FOUNDATION Fieldbus Protocol: If noted.
   c. ProfiNet: If noted.
6. Enclosure:
   a. Type: NEMA 4X.
   b. Materials: Coated aluminum, unless otherwise noted.
   c. Mounting bracket, unless otherwise noted.
      1) Bracket and Accessories: Stainless steel; suitable for mounting transmitter to panel or 2-inch pipe.
7. Accessories:
   a. Three-valve manifold, unless otherwise noted.
      1) Includes one equalization and two isolation valves.
      2) Type 316 stainless steel.
8. Manufacturers and Products:
   a. Rosemount; Model 3051 CD.
   b. Foxboro; Model IDP10.
   c. SMAR; LD30XD Series.
   d. “Or-equal.”

H. Flow Element and Transmitter, Electromagnetic:

1. General:
   a. Function: Measure, indicate, and transmit the flow of a conductive process liquid in a full pipe.
   b. Type:
      1) Electromagnetic flowmeter, with operation based on Faraday’s Law, utilizing the pulsed dc type coil excitation principle with high impedance electrodes.
      2) Full bore meter with magnetic field traversing entire flow-tube cross section.

3) Unacceptable are insert magmeters or multiple single point probes inserted into a spool piece.

c. Parts: Flow element, transmitter, interconnecting cables, and mounting hardware. Other parts as noted.

2. Service:
   a. Stream Fluid:
      1) As noted.
      2) Suitable for liquids with a minimum conductivity of 5 microS/cm and for demineralized water with a minimum conductivity of 20 microS/cm.
   b. Flow Stream Descriptions: If and as described below.
3. Operating Temperature:
   a. Element:
      1) Ambient: Minus 5 to 140 degrees F, typical, unless otherwise noted.
      2) Process: Minus 5 to 140 degrees F, typical, unless otherwise noted.
   b. Transmitter:
      1) Ambient: Minus 5 to 140 degrees F, typical, unless otherwise noted.
      2) Storage: 15 to 120 degrees F, typical, unless otherwise noted.
4. Performance:
   a. Flow Range: As noted.
   b. Accuracy: Plus or minus 0.5 percent of rate for all flows resulting from pipe velocities of 2 to 30 feet per second.
   c. Turndown Ratio: Minimum of 10 to 1 when flow velocity at minimum flow is at least 1 foot per second.
5. Features:
   a. Zero stability feature to eliminate the need to stop flow to check zero alignment.
   b. No obstructions to flow.
   c. Very low pressure loss.
   d. Measures bi-directional flow.
6. Process Connection:
   a. Meter Size (diameter inches): As noted.
   b. Connection Type: 150-pound ANSI raised-face flanges; AWWA C207, Table 2 Class D, unless otherwise noted.
   c. Flange Material: Carbon steel, unless otherwise noted.
7. Power (Transmitter): 120V ac, 60-Hz, unless otherwise noted.
8. Element:
   a. Meter Tube Material: Type 304 or 316 stainless steel, unless otherwise noted.
   b. Liner Material:
      1) Teflon, unless otherwise noted.
   c. Liner Protectors: Covers (or grounding rings) on each end to protect liner during shipment.

d. Electrode Type: Flush or bullet nose as recommended by the manufacturer for the noted stream fluid.
e. Electrode Material: Type 316 stainless steel or Hastelloy C, unless otherwise noted.
f. Grounding Ring:
    1) Required, unless otherwise noted.
    2) Quantity: Two, unless otherwise noted.
    3) Material: Type 316 stainless steel, unless otherwise noted.
g. Enclosure: NEMA 4X, minimum, unless otherwise noted.
h. Submergence:
    1) Temporary: not required, unless otherwise noted.
    2) Continuous (up to 10 feet depth), NEMA 6P/IP68: If noted.
i. Direct Buried (3 to 10 feet): If noted.
j. Hazardous Area Certification:
    1) Suitable for installation in Class 1 Division 1, Groups C, D: If noted.
    2) Suitable for installation in Class 1, Division 2, Groups C, D: If noted.

9. Transmitter:
    a. Mounting: Surface (wall), unless otherwise noted.
    b. Display: Required, unless otherwise noted.
        1) Digital LCD display, indicating flow rate and total.
        2) Bi-directional Flow Display: Required, unless otherwise noted.
            a) Forward and reverse flow rate.
            b) Forward, reverse and net totalization.
    c. Parameter Adjustments: By keypad or non-intrusive means.
    d. Enclosure: NEMA 4X, minimum, unless otherwise noted.
    e. Empty Pipe Detection:
        1) If noted.
        2) Drives display and outputs to zero when empty pipe detected.
10. Signal Interface (at Transmitter):
    a. Analog Output:
        1) Isolated 4 mA to 20 mA dc for load impedance from 0 ohm to at least 500 ohms minimum for 24V dc supply.
        2) Supports Superimposed Digital HART protocol: If noted.
    b. Discrete Outputs: If noted.
        1) Two discrete outputs, typical, rated for up to 30 volts, typical.
        2) Programmable as noted for the following typical parameters:
            a) Totalizer pulse, high/low flow rates, percent of range, empty pipe zero, fault conditions, forward/reverse, etc.

c. Discrete Input: If noted.
    1) Contact closure, configured as noted for the following typical parameters: reset totalizer, change range, hold output constant, drive output to zero, and low flow cutoff, etc.
d. Other: As noted.

11. Cables:
    a. Types: As recommended by manufacturer.
    b. Lengths: As required to accommodate device locations.
12. Built-in Diagnostic System:
    a. Features:
        1) Field programmable electronics.
        2) Self-diagnostics with troubleshooting codes.
        3) Ability to program electronics with full scale flow, engineering units, meter size, zero flow cutoff, desired signal damping, totalizer unit digit value, etc.
        4) Initial flow tube calibration and subsequent calibration checks.
13. Factory Calibration:
    a. Calibrated in an ISO 9001 and NIST certified factory.
    b. Factory flow calibration system shall be certified by volume or weight certified calibration devices.
    c. Factory flow calibration system shall be able to maintain calibration flow rate for at least 5 minutes for repeatability point checks.
14. Factory Ready for Future In Onsite Verifications: If noted.
    a. Original meter parameter values available from Contractor by request.
15. Accessories:
    a. Onsite Verification System: If noted.
        1) Quantity: One complete system provided for the Project.
        2) Verifies quantitatively that the meter and signal converter's present condition is the same as originally manufactured.
        3) Physical access to the flow-tube not required.
        4) Meet standards established by the National Testing Laboratory.
        5) Tests and stores over 50-meter parameters related to primary coils, electrodes, interconnecting cable and signal converter.
        6) Verification standard shall be plus or minus 1 percent of wet calibration for meters produced using the calibration verification service, or plus or minus 2 percent for standard meters.
        7) Windows-based software.
    b. Primary Simulation System: If noted.
        1) Quantity: One complete system provided for the Project.
        2) Verifies proper operation of the signal converter by simulating the flow meter's output signal.

a) Generates pulsed dc excitation signal with a reference voltage of 70 mV.
b) Generated signal ranges from 0 to 99 percent (0 to 32.8 feet per second) with a resolution of 0.1 percent.
c) Switch selectable for forward, reverse and zero flow rate.

3) Verifies various input and output signals.

16. Manufacturers:
    a. ABB.
    b. Emerson Process, Rosemount.
    c. Endress & Hauser.
    d. Krohne.
    e. "Or-equal."

I. Flow Element and transmitter, Coriolis:

1. General:
    a. Direct measurement of mass flow and density independent of the fluid's physical properties, such as density, viscosity and homogeneity.
    b. Type: Coriolis effect.
    c. Parts: Flow element, transmitter, interconnecting cables, and mounting hardware. Other parts as noted.
2. Service:
    a. Stream Fluid:
        1) As noted.
        2) Suitable for liquids and gases.
3. Performance:
    a. Flow Range: As noted.
    b. Accuracy: Plus or minus 0.5 percent of rate for all flows.
4. Process Connection:
    a. Meter Size (diameter inches): As noted.
    b. Connection Type: 150-pound ANSI raised-face flanges; AWWA C207, Table 2 Class D, unless otherwise noted.
    c. Flange Material: Carbon steel, unless otherwise noted.
5. Power (Transmitter): 120V ac, 60-Hz, unless otherwise noted.
6. Element:
    a. Meter Tube Material: Type 316 stainless steel, unless otherwise noted.
    b. Hazardous Area Certification:
        1) Suitable for installation in Class 1 Division 1, Groups C, D: If noted.
        2) Suitable for installation in Class 1, Division 2, Groups C, D: If noted.
7. Transmitter:
    a. Mounting: Compact, unless otherwise noted.
    b. Display: Required, unless otherwise noted.

c. Parameter Adjustments: By keypad or non-intrusive means.
d. Enclosure: NEMA 4X, minimum, unless otherwise noted.

8. Signal Interface (at Transmitter):
   a. Analog Output:
      1) Isolated 4 mA to 20 mA dc for load impedance from 0 ohm to at least 500 ohms minimum for 24V dc supply.
      2) Supports Superimposed Digital HART protocol: If noted.
   b. Discrete Outputs: If noted.
      1) Two discrete outputs, typical, rated for up to 30 volts, typical.
   c. Discrete Input: If noted.
      1) Contact closure, configured as noted for the following typical parameters: reset totalizer, change range, hold output constant, drive output to zero, and low flow cutoff, etc.
   d. Other: As noted.
9. Cables:
   a. Types: As recommended by manufacturer.
   b. Lengths: As required to accommodate device locations.
10. Built-in Diagnostic System:
   a. Features:
      1) Field programmable electronics.
      2) Self-diagnostics with troubleshooting codes.
11. Factory Ready for Future Onsite Verifications: If noted.
   a. Original meter parameter values available from Contractor by request.
12. Manufacturers:
   a. Yokowaga.
   b. Emerson Process, Rosemount.
   c. Honeywell.
   d. Krohne.
   e. Endress & Hauser.
   f. “Or-equal.”

J. Flow Element and Transmitter, Vortex:

1. General:
   a. Direct measurement of mass flow rate and temperature simultaneously.
   b. Type: Vortex.
   c. Parts: Flow element, embedded temperature sensor, transmitter, interconnecting cables, and mounting hardware. Other parts as noted.
2. Service:
   a. Stream Fluid:
      1) As noted.
      2) Suitable for steam and gases.
3. Performance:
   a. Flow Range: As noted.

b. Accuracy: Plus or minus 1 percent of rate for all flows.

4. Process Connection:
   a. Meter Size (diameter inches): As noted.
   b. Connection Type: As noted.
5. Power (Transmitter): 10.5 to 30V dc.
6. Element:
   a. Body: Stainless steel CF8M, or similar.
   b. Shedder Bar: Duplex Stainless steel, or similar.
   c. Hazardous Area Certification:
      1) Suitable for installation in Class 1 Division 1, Groups C, D: If noted.
      2) Suitable for installation in Class 1, Division 2, Groups C, D: If noted.
7. Transmitter:
   a. Mounting: Compact, unless otherwise noted.
   b. Display: Required, unless otherwise noted.
   c. Parameter Adjustments: By keypad or non-intrusive means.
   d. Enclosure: NEMA 4X, minimum, unless otherwise noted.
8. Signal Interface (at Transmitter):
   a. Analog Output:
      1) Isolated 4 mA to 20 mA dc for load impedance from 0 ohm to at least 500 ohms minimum for 24V dc supply.
      2) Supports Superimposed Digital HART protocol: If noted.
   b. Discrete Outputs: If noted.
      1) One discrete output, rated for up to 30 volts, typical.
   c. Other: As noted.
9. Cables:
   a. Types: As recommended by manufacturer.
   b. Lengths: As required to accommodate device locations.
10. Built-in Diagnostic System:
    a. Features:
       1) Field programmable electronics.
       2) Self-diagnostics with troubleshooting codes.
11. Factory Ready for Future Onsite Verifications: If noted.
    a. Original meter parameter values available from Contractor by request.
12. Manufacturers:
    a. Yokowaga.
    b. Emerson Process, Rosemount.
    c. Endress & Hauser
    d. “Or-equal.”

K. Differential Pressure:

1. General:
   a. Function:
      1) Measure differential pressure.
      2) Transmit signal proportional to either differential pressure.

b. Type:
   1) Electronic variable capacitance or silicon strain gauge.
   2) Two-wire transmitter; “smart electronics”. Hart compatible
c. Parts: Transmitter and accessories.

2. Performance:
   a. Range: As noted.
      1) Select transmitter’s factory upper range limit (URL) such that upper boundary of noted range is as close as possible to 80 percent of factory URL, but does not exceed it.
   b. Accuracy: Plus or minus 0.10 percent of span, unless otherwise noted.
   c. Ambient Operating Temperature: Minus 40 degrees F to plus 175 degrees F, with integral meter.
   d. Process Operating Temperature: Minus 40 degrees F to plus 250 degrees F.
   e. Humidity: 0 to 100 percent relative humidity.
   f. Hazardous Location Certifications:
      1) Suitable for installation in Class 1 Division 1, Groups C, D: If noted.
      2) Suitable for installation in Class 1, Division 2, Groups C, D: If noted.
3. Features:
   a. Adjustable damping.
   b. LCD indicator, unless otherwise noted.
      1) Display in either percent or engineering units, field configurable.
   c. Wetted Metallic Parts: Type 316 stainless steel, unless otherwise noted.
      1) Includes drain/vent valves, process flanges and adapters, and process isolating diaphragm.
   d. Wetted O-Rings: Glass-filled TFE, graphite-filled PTFE, or Viton, unless otherwise noted.
   e. Bolts and Nuts (if required): Type 316 stainless steel, unless otherwise noted.
   f. Fill Fluid: Silicone, unless otherwise noted.
4. Process Connections:
   a. Line Size: 1/2 inch.
   b. Connection Type: FNPT.
   c. Direct/remote Diaphragm Seal: If and as noted.
5. Signal Interface:
   a. 4 mA to 20 mA dc output with digital signal based on HART protocol, unless otherwise noted below.
      1) Nominal Maximum Loop Resistance with External 24V dc Power Supply: 550 ohms.
   b. FOUNDATION Fieldbus Protocol: If noted.
   c. ProfiNet: If noted.

6. Enclosure:
    a. Type: NEMA 4X.
    b. Materials: Coated aluminum, unless otherwise noted.
    c. Mounting bracket, unless otherwise noted.
        1) Bracket and Accessories: Stainless steel; suitable for mounting transmitter to panel or 2-inch pipe.
7. Accessories:
    a. Three-valve manifold, unless otherwise noted.
        1) Includes one equalization and two isolation valves.
        2) Type 316 stainless steel.
8. Manufacturers and Products:
    a. Rosemount; Model 3051 CD.
    b. Foxboro; Model IDP10.
    c. SMAR; LD30XD Series.
    d. "Or-equal."

L. Pressure Transmitter:

1. General:
    a. Function: Measure pressure and transmit signal proportional to pressure.
    b. Type:
        1) Electronic variable capacitance or silicon strain gauge.
        2) Two-wire transmitter; "smart electronics". Hart compatible.
    c. Parts: Transmitter and accessories.
2. Performance:
    a. Range: As noted.
        1) Select transmitter's factory upper range limit (URL) such that upper boundary of noted range is as close as possible to 80 percent of factory URL, but does not exceed it.
    b. Accuracy: Plus or minus 0.075 percent of span, unless otherwise noted.
    c. Ambient Operating Temperature: Minus 40 degrees F to plus 175 degrees F, with integral meter.
    d. Process Operating Temperature: Minus 40 degrees F to plus 250 degrees F.
    e. Humidity: 0 to 100 percent relative humidity.
    f. Hazardous Location Certifications: If and as noted.
3. Features:
    a. Type: Gauge pressure, unless otherwise noted.
    b. Adjustable damping.
    c. LCD indicator, unless otherwise noted.
        1) Display in either percent or engineering units, field configurable.

d. Wetted Metallic Parts: Type 316 stainless steel, unless otherwise noted.
   1) Includes drain/vent valves, process flanges and adapters, and process isolating diaphragm.
e. Wetted O-Rings: Glass filled TFE, graphite filled PTFE, or Viton, unless otherwise noted.
f. Bolts and Nuts (if required): Type 316 stainless steel, unless otherwise noted.
g. Fill Fluid: Silicone, unless otherwise noted.

4. Process Connections:
   a. Line Size: 1/2 inch.
   b. Connection Type: FNPT.
   c. Direct/remote Diaphragm Seal: If and as noted.
5. Signal Interface:
   a. 4mA to 20 mA dc output with digital signal based on HART protocol, unless otherwise noted below.
      1) Nominal Maximum Loop Resistance with External 24V dc Power Supply: 550 ohms.
   b. FOUNDATION fieldbus protocol: If noted.
   c. ProfiNet: If noted.
6. Enclosure:
   a. Type: NEMA 4X.
   b. Materials: Coated aluminum, unless otherwise noted.
   c. Mounting bracket, unless otherwise noted.
      1) Bracket and Accessories: Stainless steel; suitable for mounting transmitter to panel or 2-inch pipe.
7. Accessories:
   a. Two-valve (isolate and vent) Stainless Steel Manifold: If noted.
8. Manufacturers and Products:
   a. Gauge Pressure Units:
      1) Rosemount; Model 3051 TG.
      2) Foxboro; Model IGP20.
      3) SMAR; LD30XM Series.
   b. Absolute Pressure Units:
      1) Rosemount; Model 3051 TA.
      2) Foxboro; Model IAP20.
      3) SMAR; LD30XA Series.
      4) “Or-equal.”

M. Pressure Differential Transmitter:

1. General:
   a. Function:
      1) Measure differential pressure.
      2) Transmit signal proportional to either differential pressure or square root of differential pressure, as applicable.

b. Type:
   1) Electronic variable capacitance or silicon strain gauge.
   2) Two-wire transmitter; “smart electronics”. Hart Compatible
c. Parts: Transmitter and accessories.

2. Performance:
   a. Range: As noted.
      1) Select transmitter’s factory upper range limit (URL) such that upper boundary of noted range is as close as possible to 80 percent of factory URL, but does not exceed it.
   b. Accuracy: Plus or minus 0.10 percent of span, unless otherwise noted.
   c. Ambient Operating Temperature: Minus 40 degrees F to plus 175 degrees F, with integral meter.
   d. Process Operating Temperature: Minus 40 degrees F to plus 250 degrees F.
   e. Humidity: 0 to 100 percent relative humidity.
   f. Hazardous Location Certifications: If and as noted.
3. Features:
   a. Linear or square-root output, user-configurable.
   b. Factory preconfigure for square root output if transmitter tagged as “FT” or “FIT”.
   c. Adjustable damping.
   d. LCD indicator, unless otherwise noted.
      1) Display in either percent or engineering units, field configurable.
   e. Wetted Metallic Parts: Type 316 stainless steel, unless otherwise noted.
      1) Includes drain/vent valves, process flanges and adapters, and process isolating diaphragm.
   f. Wetted O-Rings: Glass-filled TFE, graphite-filled PTFE, or Viton, unless otherwise noted.
   g. Bolts and Nuts (if required): Type 316 stainless steel, unless otherwise noted.
   h. Fill Fluid: Silicone, unless otherwise noted.
4. Process Connections:
   a. Line Size: 1/2 inch.
   b. Connection Type: FNPT.
   c. Direct/remote Diaphragm Seal: If and as noted.
5. Signal Interface:
   a. 4 mA to 20 mA dc output with digital signal based on HART protocol, unless otherwise noted below.
      1) Nominal Maximum Loop Resistance with External 24V dc Power Supply: 550 ohms.
   b. FOUNDATION Fieldbus Protocol: If noted.
   c. ProfiNet: If noted.
6. Enclosure:
   a. Type: NEMA 4X.

b. Materials: Coated aluminum, unless otherwise noted.
c. Mounting bracket, unless otherwise noted.
1) Bracket and Accessories: Stainless steel; suitable for mounting transmitter to panel or 2-inch pipe.

7. Accessories:
a. Three-valve manifold, unless otherwise noted.
1) Includes one equalization and two isolation valves.
2) Type 316 stainless steel.

8. Manufacturers and Products:
a. Rosemount; Model 3051 CD.
b. Foxboro; Model IDP10.
c. SMAR; LD30XD Series.
d. "Or-equal."

N. Pressure Differential Switch:

1. General:
a. Function: Monitor differential pressure.
b. Type: Diaphragm actuated switch.

2. Performance:
a. Setpoint:
1) As noted.
2) Repeatability: Plus or minus 1 percent.
b. Range: Noted setpoint shall fall between 20 percent and 90 percent of range.
c. Static Pressure:
1) Operating Static Pressure: As noted.
2) Operating static pressure shall be less than switch's rated maximum static pressure.
d. Overpressure Proof Pressure: At least 400 percent of rated maximum static pressure.
e. Operating Temperature Range:
1) Dependent on actuator seal materials.
2) Buna-N Seal: 0 to 150 degrees F.

3. Features:
a. Actuator Seal: Buna-N, unless otherwise noted.
b. Fixed differential, unless otherwise noted.
c. Mounting: Surface, unless otherwise noted.

4. Process Connection:
a. 1/4-inch NPT female connections, unless otherwise noted.
b. Materials: Nickel-plated brass, unless otherwise noted.

5. Enclosure: NEMA 4X.

6. Signal Interface:
a. Contact Type:
1) SPDT, unless otherwise noted.
2) Rated for 10 amps minimum at 120V ac.
b. Hermetically Sealed Switch: If noted.

O. Pressure Switch, Adjustable Dead Band:

1. General:
   a. Function: Monitor pressure, activate switch at setpoint, and deactivate switch at reset point.
   b. Type:
      1) Piston-actuated.
      2) Both setpoint and deadband (the differential between setpoint and reset point) adjustable.
2. Performance:
   a. Setpoint:
      1) As noted.
      2) Repeatability: Plus or minus 1 percent of range.
   b. Reset Point: As noted.
   c. Range: The noted setpoint shall fall between 20 percent and 80 percent of the range.
   d. Deadband: Adjustable within nominally 25 percent and 85 percent of range.
   e. Overpressure Proof Pressure:
      1) Pressure psi Ranges: At least 400 percent of rated maximum static pressure.
      2) Pressure Inches of Water Ranges: 20 psig.
      3) Compound Range: 250 psig.
      4) Vacuum Range: 250 psig.
   f. Operating Temperature Range:
      1) Dependent on actuator seal materials.
      2) For Buna-N seal, 0 degree F to 150 degrees F.
3. Features:
   a. Actuator Seal: Buna-N, unless otherwise noted.
   b. Adjustable deadband.
   c. Mounting: Surface, unless otherwise noted.
4. Process Connection:
   a. 1/4-inch NPT female connections, unless otherwise noted.
   b. Materials:
      1) Pressure psi ranges: Type 316 stainless steel, unless otherwise noted.
      2) Pressure inches of water ranges: Epoxy coated carbon steel, unless otherwise noted.
5. Enclosure: NEMA 4X, unless otherwise noted.
6. Signal Interface:
   a. Contact Type:
      1) SPDT.
      2) Rated for 10 amps minimum at 120V ac.
   b. Hermetically sealed switch: If noted.
7. Manufacturers and Products:
   a. Ashcroft; L or P Series.
   b. United Electric; J6 Series.

c. For hazardous areas: Ashcroft P series NEMA 7, explosion-proof enclosure specified.
d. “Or-equal.”

P. Pressure Gauge:

1. General:
   a. Function: Local pressure indication.
   b. Type: Bourdon tube element.
2. Performance:
   a. Scale range: As noted.
   b. Accuracy: Plus or minus 0.50 percent of full scale.
3. Features:
   a. Dial: 4-1/2-inch diameter.
   b. Pointer vibration reduction: Required, unless otherwise noted. Use the following method.
      1) Liquid filled gauge front, unless otherwise noted.
         a) Glycerine fill, unless otherwise noted.
   c. Case Material: Black thermoplastic, unless otherwise noted.
   d. Materials of Wetted Parts (including element, socket/process connection, throttling device (if specified) and secondary components):
      1) Stainless steel, unless otherwise noted.
   e. Pointer: Adjustable by removing ring and window.
   f. Window: Glass or acrylic, unless otherwise noted.
   g. Threaded reinforced polypropylene front ring.
   h. Case Type: Solid front with blow-out back.
4. Process Connection:
   a. Mounting: Lower stem, unless otherwise noted.
   b. Size: 1/2-inch MNPT, unless otherwise noted.
5. Accessories:
   a. Throttling Device: Required, unless otherwise noted.
      1) Type suitable for the intended service.
      2) Install in gauge socket bore.
6. Manufacturers and Products:
   a. Ashcroft; Duragauge Model 1259/Model, 1279/Model, 1279 PLUS!
   b. Ametek U.S. Gauge; Solfrunt Model 19XX/1981Advantatge.
   c. WIKA, Type 2XX.34.
   d. “Or-equal.”

Q. Temperature Element and Transmitter, Resistance:

1. General:
   a. Function: Measure temperature of process fluid and transmit analog signal proportional to temperature.
   b. Type: RTD.

c. Parts: Element, thermowell, and transmitter.

2. Service:
   a. Process Fluid: As noted.
   b. Process Temperature Range: As noted.
3. Element:
   a. Type:
      1) Single element, unless otherwise noted.
      2) Three-wire, RTD.
      3) Platinum, 100 ohm nominal at 0 degree C.
   b. Performance:
      1) Sensor Accuracy for 900 degrees F and Below: Plus or minus 0.5 degree F or plus or minus 0.25 percent of reading, whichever is larger.
   c. Features:
      1) Dimensions (bare element): 1/4-inch diameter.
      2) Length to accommodate thermowell insertion and extension length.
      3) Spring-loaded element when thermowell is used.
      4) Sheath:
         a) Type 316 stainless steel, unless otherwise noted.
         b) Process Operating Temperature Range: Minus 320 degrees F to 900 degrees F, unless otherwise noted.
      5) Terminal Connection Head:
         a) General purpose, NEMA 4 weatherproof, unless otherwise noted.
         b) Maximum Ambient Temperature: 220 degrees F, unless otherwise noted.
      6) Thermowell Connection: Union coupler, stainless steel, unless otherwise noted.
      7) Sensitive Length: 1.6-inch minimum, measured from closed end.
4. Thermowell:
   a. Features:
      1) Inside Diameter: Sized to match thermocouple.
      2) Material: Type 316 stainless steel, unless otherwise noted.
      3) Insertion Length: As noted.
      4) Extension Length: 3 inches, unless otherwise noted.
   b. Process Connection: 1-inch NPT connection, unless otherwise noted.
   c. Well Type: Threaded straight, unless otherwise noted.
   d. Provide wake frequency calculation for thermowells as required.
5. Transmitter:
   a. Ambient Operation Conditions:
      1) Temperature: Minus 20 degrees F to 158 degrees F, with display.
      2) Relative Humidity: 0 to 100 percent, noncondensing.

b. Type: Two-wire, powered by remote power supply.
c. Performance:
    1) Digital Accuracy: Greater of plus or minus 0.09 degree F or plus or minus 0.01 percent of span.
    2) Response Time: 1.2 second 90 percent response time for 80 percent input step, with minimum damping.
d. Electrical Safety: Standard unless otherwise noted.
e. Features:
    1) Indicator: Three-line LCD, unless otherwise noted.
    2) Automatic reference junction compensation.
    3) Failsafe Mode:
        a) User configurable ON, unless otherwise noted.
        b) Downscale, unless otherwise noted.
    4) Electric Damping: 1.2 seconds.
f. Signal Interface: 4 mA to 20 mA dc.
g. Power: 24V dc external power supply.
h. Digital Communication: HART.
    1) Supply one HART communicator for HART capable transmitters, if not already supplied under another Specification section.
i. Enclosure:
    1) Materials: Epoxy-coated, low-copper aluminum, unless otherwise noted.
    2) Type: NEMA 4X.
    3) Mounting: Wall, pipe stand, or integral to thermowell, as noted.
        a) For pipe stand, provide stainless steel mounting set, unless otherwise noted.
        b) For integral thermowell mount, provide explosion-proof connection.

6. Manufacturers and Products:
    a. Invensys/Foxboro; RTT20 Series Transmitter with PR Series RTD and T-Series Thermowell.
    b. Rosemount; 78 Series Platinum RTD with Thermowell and Model 644H Transmitter.
    c. “Or-equal.”

R. T4 Temperature Element and Transmitter, Thermocouple:

1. General:
    a. Function: Measure temperature of process fluid and transmit analog signal proportional to temperature.
    b. Type: Thermocouple.
    c. Parts: Element, thermowell, and transmitter.
2. Service:
    a. Process Fluid: As noted.
    b. Process Temperature Range: As noted.

3. Element:
    a. Type:
        1) Single-element, unless otherwise noted.
        2) Iron-constantan, Type J, ungrounded, unless otherwise noted.
    b. Performance:
        1) Accuracy: Plus or minus 4 degrees F or plus or minus 0.75 percent of reading, whichever is greater.
    c. Features:
        1) Dimensions (Bare Element): 1/4-inch diameter.
        2) Length to accommodate thermowell insertion and extension length.
        3) Spring-loaded element when well is used.
        4) Sheath:
            a) Type 316 stainless steel, unless otherwise noted.
            b) Process Operating Temperature:
                (1) Range: Minus 320 degrees F to 1600 degrees F, unless otherwise noted.
        5) Terminal Connection Head:
            a) General purpose, NEMA 4 weatherproof, unless otherwise noted.
            b) Maximum Temperature: 220 degrees F, unless otherwise noted.
        6) Thermowell Connection: Union coupler, stainless steel, unless otherwise noted.
        7) Sensitive Length: 1.6-inch minimum, measured from closed end.
4. Thermowell:
    a. Features:
        1) Inside Diameter: Sized to match thermocouple.
        2) Material: Type 316 stainless steel, unless otherwise noted.
        3) Insertion Length: As noted.
        4) Extension Length: 3 inches, unless otherwise noted.
    b. Process Connection: 1-inch NPT connection, unless otherwise noted.
    c. Well Type: Threaded straight, unless otherwise noted.
    d. Provide wake frequency calculation for thermowells as required.
5. Transmitter:
    a. Ambient Operation Conditions:
        1) Temperature: Minus 20 degrees F to 158 degrees F, with display.
        2) Relative Humidity: 0 percent to 100 percent, noncondensing.
    b. Type: Two-wire, powered by a remote power supply.
    c. Performance:
        1) Digital Accuracy: Greater of plus or minus 0.07 degree F or plus or minus 0.01 percent of span.

2) Response Time: 1.2 second 90 percent response time for 80 percent input step, with minimum damping.

d. Electrical Safety: Standard unless otherwise noted.

e. Features:

1) Indicator: Three-line LCD, unless otherwise noted.

2) Automatic reference junction compensation.

3) Failsafe Mode:

a) User configurable ON, unless otherwise noted.

b) Downscale, unless otherwise noted.

4) Electric Damping: 1.2 seconds.

f. Signal Interface: 4 mA to 20 mA dc.

g. Power: 24V dc external power supply.

h. Digital Communication: HART.

1) One HART communicator to be supplied for all HART capable transmitters, if not already supplied under another Specification section.

i. Enclosure:

1) Materials: Epoxy-coated, low-copper aluminum, unless otherwise noted.

2) Type: NEMA 4X.

3) Mounting: Wall, pipe stand, or integral to thermowell, as noted.

a) For pipe stand, provide stainless steel mounting set, unless otherwise noted.

b) For integral thermowell mount, provide explosion-proof connection.

6. Manufacturers and Products:

a. Invensys/Foxboro; RTT20 Series Transmitter with MINOX MT Series Thermocouple and Thermowell.

b. Rosemount; Series 183 Thermocouple and Thermowell, and Model 644H Transmitter.

c. “Or-equal.”

S. Thermometer, Adjustable Angle:

1. General:

a. Function: Indicate process temperature.

b. Type: Bi-metallic, circular dial.

c. Parts: Temperature gauge and thermowell.

2. Performance:

a. Scale Range: As noted.

b. Accuracy: 1 percent of full scale.

3. Thermometer Features:

a. Stem Length: 4 inches, unless otherwise noted.

b. Stem Type:

1) Every angle, unless otherwise noted.

a) Adjustable 90 degrees vertical, 360 degrees horizontal.

c. Dial:
1) Heavy-duty glass, unless otherwise noted.
2) 5-inch circular, unless otherwise noted.
3) Hermetically sealed.

d. Construction: All-welded, stainless steel.

4. Thermowell:
a. Type: 1/2-inch NPT connection, Type 316 stainless steel.
b. Extension Neck: When noted, with length as noted.

5. Manufacturers and Products:
a. Ashcroft; Series EI bimetal thermometer.
b. WIKA; Type S5301 bimetal thermometer.
c. "Or-equal."

PART 3 EXECUTION

3.01 SUPPLEMENTS

A. The supplements listed below, following "End of Section," are part of this Specification.

1. Instrument List.
2. Instrument Data Sheets.

END OF SECTION

INTENTIONALLY LEFT BLANK

CLIENT: SWBNO													
LOCATION: NEW ORLEANS							Combined Instrument and IO List						
PROJECT:		1444											
BUILDING:													
INDEX NO.	TAG	FUNC	UNIT #	SYSTEM	LOOP NO.	Line Number	DESCRIPTION	P&ID	Setpoint	I/O TYPE (PSS I/O TYPE)	Signal	Local Ctrl System	AREA CLASS
25	WPCAUX-0-FO-FV-037A	FV	7	FO	037A	WPCAUX-0-FO-3"-0004-HC01-N	FUEL OIL DAY TANK FLOW VALVE REMOTE TANK FILL	P-550		N/A	N/A	N/A	
27	WPCAUX-0-FO-HIS-005	HS	7	FO	005	N/A	FUEL OIL PUMP 3 HAND OFF AUTO	P-550		DI	24V	PSS - BOP CONTROL SYSTEM	
28	WPCAUX-0-FO-HIS-006	HS	7	FO	006	N/A	FUEL OIL PUMP 4 HAND OFF AUTO	P-550		DI	24V	PSS - BOP CONTROL SYSTEM	
31	WPCAUX-0-FO-HS-005	HIS	7	FO	005	N/A	FUEL OIL PUMP 3 HAND SWITCH	P-550		N/A	N/A	N/A	
32	WPCAUX-0-FO-HS-006	HIS	7	FO	006	N/A	FUEL OIL PUMP 4 HAND SWITCH	P-550		N/A	N/A	N/A	
52	WPCAUX-0-FO-PDAL-007	PDAL	7	FO	007	N/A	FUEL OIL PUMP 3 dP LOW ALARM	P-550		SOFT TAG	N/A	N/A	
53	WPCAUX-0-FO-PDAL-008	PDAL	7	FO	008	N/A	FUEL OIL PUMP 4 dP LOW ALARM	P-550		SOFT TAG	N/A	N/A	
56	WPCAUX-0-FO-PDI-009	PDI	7	FO	009	N/A	FUEL OIL PUMP 3 INLET STRAINER dP INDICATOR	P-550		N/A	N/A	N/A	
57	WPCAUX-0-FO-PDI-010	PDI	7	FO	010	N/A	FUEL OIL PUMP 4 INLET STRAINER dP INDICATOR	P-550		N/A	N/A	N/A	
60	WPCAUX-0-FO-PDSL-007	PDSL	7	FO	007	N/A	FUEL OIL PUMP 3 dP SWITCH LOW	P-550	25 PSIG	DI	24V	PSS - BOP CONTROL SYSTEM	
61	WPCAUX-0-FO-PDSL-008	PDSL	7	FO	008	N/A	FUEL OIL PUMP 4 dP SWITCH LOW	P-550	25 PSIG	DI	24V	PSS - BOP CONTROL SYSTEM	
64	WPCAUX-0-FO-PI-003	PI	7	FO	003	N/A	FUEL OIL PUMP 3 DISCHARGE PRESSURE INDICATOR	P-550		N/A	N/A	N/A	
65	WPCAUX-0-FO-PI-004	PI	7	FO	004	N/A	FUEL OIL PUMP 4 DISCHARGE PRESSURE INDICATOR	P-550		N/A	N/A	N/A	
66	WPCAUX-0-FO-PI-012	PI	7	FO	012	N/A	FUEL OIL PRESSURE INDICATOR	P-550		N/A	N/A	N/A	
76	WPCAUX-0-FO-PRV-001	PRV	7	FO	001	N/A	FUEL OIL PUMP 3 DISCHARGE PRESSURE RELIEF VALVE	P-550		N/A	N/A	N/A	
77	WPCAUX-0-FO-PRV-002	PRV	7	FO	002	N/A	FUEL OIL PUMP 4 DISCHARGE PRESSURE RELIEF VALVE	P-550		N/A	100	N/A	
81	WPCAUX-0-FO-TE-011	TE	7	FO	011	N/A	FUEL OIL TEMPERATURE ELEMENT	P-550		N/A	N/A	N/A	
84	WPCAUX-0-FO-TI-011	TI	7	FO	011	N/A	FUEL OIL TEMPERATURE INDICATOR	P-550		N/A	N/A	N/A	
89	WPCAUX-0-FO-YC-005	YC	7	FO	005	N/A	FUEL OIL PUMP 3 START STOP	P-550		DO	24V to relay, 120V to MCC	PSS - BOP CONTROL SYSTEM	
90	WPCAUX-0-FO-YC-006	YC	7	FO	006	N/A	FUEL OIL PUMP 4 START STOP	P-550		DO	24V to relay, 120V to MCC	PSS - BOP CONTROL SYSTEM	
93	WPCAUX-0-FO-YC-037A	YC	7	FO	037A	N/A	FUEL OIL DAY TANK FILL OPERATION START STOP TRUCK FILL	P-550		DO	24V	PSS - BOP CONTROL SYSTEM	
94	WPCAUX-0-FO-YI-005	YI	7	FO	005	N/A	FUEL OIL PUMP 3 RUN STATUS	P-550		DI	24V	PSS - BOP CONTROL SYSTEM	
95	WPCAUX-0-FO-YI-006	YI	7	FO	006	N/A	FUEL OIL PUMP 4 RUN STATUS	P-550		DI	24V	PSS - BOP CONTROL SYSTEM	
153	WPCAUX-0-FO-FV-041	FV	7	FO	041	WPCAUX-0-FO-3"-0004-HC01-N	FUEL OIL DAY TANK FLOW VALVE REMOTE TANK FILL	P-550		N/A	N/A	N/A	
155	WPCAUX-0-FO-YC-041	YC	7	FO	041	N/A	FUEL OIL DAY TANK FLOW VALVE REMOTE TANK FILL	P-550		DO	24V	PSS - BOP CONTROL SYSTEM	
200	WPCAUX-00-FO-PIT-001	PIT	00	FO		00-3"FO-001-0HC01-N	FUEL OIL FORWARDING PUMP 1 SUCTION PRESSURE TRANSMITTER	M3-2		Modbus	COM	FUEL OIL FORWARDING PUMP SKID	EXP PROOF Class 1 Div 2
201	WPCAUX-00-FO-PDIT-002	DPIT	00	FO		00-3"FO-001-0HC01-N	FUEL OIL FORWARDING PUMP 1 SUCTION STRAINER DP TRANSMITTER	M3-2		Modbus	COM	FUEL OIL FORWARDING PUMP SKID	EXP PROOF Class 1 Div 2
202	WPCAUX-00-FO-PI-003	PIT	00	FO		00-3"FO-004-0HC01-N	FUEL OIL FORWARDING PUMP 1 DISCHARGE PRESSURE INDICATOR	M3-2		N/A	N/A	N/A	
203	WPCAUX-00-FO-PIT-004	PIT	00	FO		00-3"FO-004-0HC01-N	FUEL OIL FORWARDING PUMP 1 DISCHARGE PRESSURE TRANSMITTER	M3-2		Modbus	COM	FUEL OIL FORWARDING PUMP SKID	EXP PROOF Class 1 Div 2
204	WPCAUX-00-FO-PRV-005	PRV	00	FO		00-3"FO-004-0HC01-N	FUEL OIL FORWARDING PUMP 1 DISCHARGE PRESSURE RELIEF VALVE	M3-2		N/A	N/A	N/A	
205	WPCAUX-00-FO-YC-001	YC	00	FO		N/A	FUEL OIL FORWARDING PUMP 1 START STOP	P-550		Modbus	COM	FUEL OIL FORWARDING PUMP SKID	
206	WPCAUX-00-FO-YC-002	YC	00	FO		N/A	FUEL OIL FORWARDING PUMP 2 START STOP	P-550		Modbus	COM	FUEL OIL FORWARDING PUMP SKID	
207	WPCAUX-00-FO-YI-001	YI	00	FO		N/A	FUEL OIL FORWARDING PUMP 1 RUN STATUS	P-550		Modbus	COM	FUEL OIL FORWARDING PUMP SKID	

*This column points to previous tag name of instrument in record drawings that is no longer in use.

CLIENT: SWBNO													
LOCATION: NEW ORLEANS							Combined Instrument and IO List						
PROJECT:		1444											
BUILDING:													
INDEX NO.	TAG	FUNC	UNIT #	SYSTEM	LOOP NO.	Line Number	DESCRIPTION	P&ID	Setpoint	I/O TYPE (PSS I/O TYPE)	Signal	Local Ctrl System	AREA CLASS
208	WPCAUX-00-FO-YI-002	YI	00	FO		N/A	FUEL OIL FORWARDING PUMP 2 RUN STATUS	P-550		Modbus	COM	FUEL OIL FORWARDING PUMP SKID	
209	WPCAUX-00-FO-PIT-006	PIT	00	FO		00-3"FO-002-0HC01-N	FUEL OIL FORWARDING PUMP 2 SUCTION PRESSURE TRANSMITTER	M3-2		Modbus	COM	FUEL OIL FORWARDING PUMP SKID	EXP PROOF Class 1 Div 2
210	WPCAUX-00-FO-PDIT-007	DPIT	00	FO		00-3"FO-002-0HC01-N	FUEL OIL FORWARDING PUMP 2 SUCTION STRAINER DP TRANSMITTER	M3-2		Modbus	COM	FUEL OIL FORWARDING PUMP SKID	EXP PROOF Class 1 Div 2
211	WPCAUX-00-FO-PI-008	PIT	00	FO		00-3"FO-003-0HC01-N	FUEL OIL FORWARDING PUMP 2 DISCHARGE PRESSURE INDICATOR	M3-2		N/A	N/A	N/A	
212	WPCAUX-00-FO-PIT-009	PIT	00	FO		00-3"FO-003-0HC01-N	FUEL OIL FORWARDING PUMP 2 DISCHARGE PRESSURE TRANSMITTER	M3-2		Modbus	COM	FUEL OIL FORWARDING PUMP SKID	EXP PROOF Class 1 Div 2
213	WPCAUX-00-FO-PRV-010	PRV	00	FO		00-3"FO-003-0HC01-N	FUEL OIL FORWARDING PUMP 2 DISCHARGE PRESSURE RELIEF VALVE	M3-2		N/A	N/A	N/A	

*This column points to previous tag name of instrument in record drawings that is no longer in use.

SECTION 40 92 13
PROCESS CONTROL VALVES AND REGULATORS

PART 1 GENERAL

1.01 OVERVIEW

A. This section specifies technical requirements for process control valves and pressure regulating valves.

1.02 OBJECTIVES

A. This Specification establishes the minimum requirements for design, materials, fabrication, shop testing, documentation, coating, packaging, and delivery of Pressure Regulators and Control Valves. Control Valves include modulating valves as well as On/Off valves. Control Valves with actuators and Pressure Regulators shall be furnished in strict accordance with the requirements of this Specification and shall be complete with all the accessories required for proper operation.

B. Valve size, materials of construction and the required accessories shall be in accordance with the individual Control Valve and Pressure Regulator Specification Sheets (hereafter referred to as Valve Data Sheets).

1.03 REFERENCES

A. Related Sections:

1. Section 01 61 00, Common Product Requirements.
2. Section 40 50 20, Aboveground Power Plant Piping.
3. Section 40 90 00, Instrumentation and Control General Requirements.
4. Section 40 91 00, Instrumentation and Control Components.

1.04 CODES AND STANDARDS

A. Equipment shall be designed and manufactured in accordance with the applicable code or standard in effect at the date of the Purchase Order.

B. Applicable requirements in the latest edition of the following industry standards, codes, and the contents of this Specification shall be considered an integral part of this document:

1. American National Standards Institute (ANSI): C540, Standard for Power Actuating Devices for Valves and Sluice Gates.
2. International Society of Automation (ISA):
   a. S75.01, Flow Equations for Sizing Control Valves.
   b. S75.04, Face to Face Dimensions for Flangeless Control Valves.

c. S75.05, Control Valve Terminology.
d. S75.11, Inherent Flow Characteristic and Rangeability of Control Valves.
e. SP75.17, Control Valve Aerodynamic Noise Prediction.
f. RP75.23, Considerations for Evaluating Control Valve Cavitation.

3. American Society of Mechanical Engineers (ASME):
   a. B1.20.1, Pipe Threads, General Purpose (inch).
   b. B16.1, Gray Iron Pipe Flanges and Flanged Fittings, Classes 25, 125 and 250.
   c. B16.5, Steel Pipe Flanges and Flanged Fittings.
   d. B16.10, Face-to-Face and End-to-End Dimensions of Valves.
   e. B16.11, Forged Steel Fittings, Socket Weld and Threaded.
   f. B16.20, Ring-Joint Gaskets and Grooves for Steel Pipe Flanges.
   g. B16.25, Buttwelding Ends.
   h. B16.34, Valves—Flanged, Threaded and Welding End.
   i. B31.1, Power Piping.
   j. ASME Section I, Boiler & Pressure Vessel Code.
4. ANSI/FCI 70-2, Control Valve Seat Leakage.
5. International Electrotechnical Commission (IEC): 534-8-3, Control Valve Aerodynamic Noise Prediction Method.
6. Manufacturer's Standardization Society (MSS):
   a. SP-25, Standard Marking System for Valves, Fittings, Flanges and Unions.
   b. SP-61, Pressure Testing of Steel Valves.
   c. SP-102, Multiturn Valve Actuator Attachment – Flange and Driving Component Dimensions and Performance Characteristics.
7. National Electrical Manufacturers' Association (NEMA):
   a. 250, Enclosures for Electrical Equipment (1,000 Volts Maximum).
   b. MG 1, Motors and Generators.

C. In the event of conflict, the order of precedence shall be Purchase Order, this Specification including attachments, then referenced industry standards. Contractor shall submit written exceptions for Owner approval.

D. It shall be the responsibility of the Contractor to be knowledgeable of the requirements for both the standards and codes mentioned above. Any changes or alterations to the equipment to make it meet standard and code requirements shall be at the Contractor's expense.

1.05 FORBIDDEN MATERIALS

A. No equipment shall contain mercury or asbestos.

1.06 SCOPE OF SUPPLY

A. Equipment and services furnished shall include:

1. Design, fabrication, testing, and delivery of all valves, complete with actuators and accessories, to meet the requirements of this Specification. Valves shall be supplied as complete units with all accessories mounted, piped, wired and calibrated.
2. All interconnecting instrument tubing and fittings between the valve actuator, positioner, and filter regulator.
3. Any special tools required for assembly, disassembly, and maintenance.
4. Recommended spare parts list for two years of operation.
5. Any lifting eyes or support lugs required for lifting and handling of all supplied equipment.
6. Sizing calculations and dimensional drawings. These Drawings shall show the valve complete with all accessories and actuators and shall also show weight and noise calculations. Sizing of each control valve to meet the functional requirements to be able to properly maintain set points without hunting, oscillations and noise is sole responsibility of the Contractor of the valve.
7. Safety is utmost concern. Provide safe failure mode for each control valve.
8. Completed motor datasheets for motor operated valve applications.
9. Installation, Operation and Maintenance Manuals including wiring and tubing drawings.

B. Equipment and services furnished by others shall include:

1. Receiving, unloading, storage, and installation of all supplied equipment.
2. Electrical wiring for power and signals for position indicating lights, solenoids, positioners, motor operators, and/or control stations.
3. All external piping, tubing, valves, and fittings, except as specified to be furnished by the Contractor.
4. Thermal insulation and lagging.
5. Instrument/service air, and other utilities as required.

C. Conflicts and Deviations: Should a conflict exist between this Specification and other reference documents; it shall be the responsibility of the Contractor to call attention to the discrepancy and request a written ruling or interpretation from Owner.

1.07 SUBMITTALS

A. Documentation and data shall be provided in accordance with the Submittal Register and Section 01 33 00, Submittal Procedures. Documentation shall include, but is not limited to, the following:

1. For Gas Service Applications:
   a. Capacity (C_v) as a function of travel; confirmation that the required rangeability can be met with the proposed control valve.

b. Noise calculations, including calculation basis and results, for each specified flow condition; the maximum total inaccuracy (i.e., tolerance expressed in plus or minus dBA for each noise calculation) shall be specified and added to the calculated noise level.
c. Body and trim exit fluid velocity head calculations, including number of discrete pressure drop stages required, for each specified flow condition; also specify body and trim exit fluid velocities expressed in sonic velocity (Mach number).
d. Filled in data sheet as presented as a supplement to this Specification.

2. For Liquid Service Applications:
   a. Capacity (C_v) as a function of travel; confirmation that the required rangeability can be met with the proposed control valve.
   b. Noise calculations, including calculation basis and results, for each specified flow condition; the maximum total inaccuracy (i.e., tolerance expressed in plus or minus dBA for each noise calculation) shall be specified and added to the calculated noise level.
   c. Cavitation index data and choked flow parameter data both as a function of travel specific to the selected control valve and application. Contractor shall supply written confirmation that the selected control valve eliminates cavitation damage.
   d. Size Scale Effect (SSE) and Pressure Scale Effect (PSE) correction data for the cavitation index data.
   e. Body and trim exit fluid velocity calculations, including number of discrete pressure drop stages required, for each specified flow condition.
   f. Filled in data sheet as presented as a supplement to this Specification.
3. For Motor Operated Valve Applications:
   a. Low Voltage AC Induction Motors Data Sheet for each motor operated valve. Refer to Division 26, Electrical.
   b. Complete Specifications, catalog cut sheets, product bulletins, and descriptive literature.
   c. Principal dimensions, incoming power, general construction, and outline of the actuator mechanism.
   d. Other Operating Characteristics:
      1) Output torque or thrust.
      2) Nominal power at running torque.
      3) Nominal power at locked rotor.
      4) Speed or travel time.
   e. Actuator options being supplied.
   f. Electrical wiring diagrams with list of symbols.
   g. Manufacturer’s test report for the following:
      1) Voltage, phase and frequency.
      2) Stroke time (seconds).

3) Seating (or maximum dynamic) torque.
4) Seating load amps.
5) Torque-switch and limit-switch function.

4. For All Applications:
   a. Actuator load calculations for each control valve.
   b. Prior test reports of actuator performance stability showing performance curve of previous experience with the same specification.
   c. Hydrostatic test report for each control valve.
   d. Seat leakage test report for each control valve.
   e. Stroke performance test report for each control valve.
   f. Certified Material Test Reports for each control valve.
   g. Catalog cut sheets.
   h. Valve drawings and calculations, including outline dimensions, weights, circuit diagrams, section drawings, part lists, and materials.
   i. Operation and maintenance manuals, including instructions from any low tier Contractors.
   j. Complete descriptive literature, including product bulletins, operating and design temperatures, maintenance pull space requirements, any limitations on valve mounting position, bevel detail of butt weld end connection, recommendations for field welding, packing torque requirements, and post weld heat treatment of alloy valves.
   k. Certified Material Test Report (CMTR):
      1) Furnish for both body and bonnet material.
      2) Signed by manager of valve Supplier's quality control department and shall show purchase order number and Project name/number.
      3) Certify that valve is new and complies with requirements of this Specification.
   l. Certified Test Report: Furnish for all valves.
   m. Installation instructions.
   n. Recommended spare parts if disassembly for post weld heat treatment is required for installation, with unit prices.
   o. Recommended parts for steam blow restoration, with unit prices.
   p. Recommended spare parts for 1 year's operation, with unit prices.

1.08 DELIVERY, STORAGE, AND HANDLING

A. Shipping:

1. Care shall be exercised to prevent damage to all seating surfaces after the hydro-test.
2. End connections shall be sealed securely to prevent entry of contaminants and to protect the end connections from damage.

3. All valves, actuators, and accessories shall be packaged or crated to prevent deterioration, contamination, or physical damage during transit and storage. Any articles or material that may be otherwise lost shall be boxed or wired in bundles and marked for identification with the control valve tag number, purchase order number and Project name/number.
4. Ship metal seated valves in closed position.
5. All special tools, spare parts, storage instructions, or instruction manuals shall be boxed or crated separately from the valves, clearly identified, and included in the same shipment.
6. All valve assemblies shall be prepared for shipment so that handling and unloading may be facilitated. At no time are valves, actuators, or accessories to be shipped in a disorderly arrangement or situation of disarray so as to promote damage or hamper inspection of the equipment when received on the jobsite.

B. Storage: Protect valves to withstand at least 6 months of unsheltered storage at jobsite before installation.

1.09 QUALITY ASSURANCE

A. A quality assurance program is required, summarized in a quality assurance manual and supported by written procedures for controlling activities affecting quality, such as welding, heat treatment and nondestructive examination.

B. Manufacturing/assembly facilities shall be accessible for inspection, audit and/or witness of work, inspections and tests.

C. The equipment furnished shall be guaranteed to conform to the requirements set forth and to the specified Codes, Standards and Regulations, and that all specified tests have been satisfactorily completed.

1.10 WARRANTY AND GUARANTEES

A. Furnish Contractor’s extended guarantee or warranty with Owner named as beneficiary in writing as special guarantee.

B. The Contractor shall warrant that the equipment shall be supplied in accordance with these Specifications and shall perform as described herein.

C. The Contractor shall warrant that the equipment provided shall be free from defects in materials and workmanship for a period of 12 months after acceptance by Owner.

D. The Contractor shall repair or provide a replacement for any defective component under the warranty provided that any such defect was not the result of misuse of the equipment by the Owner or the Owner’s representative.

The Contractor shall be able to provide Owner with training and support service during the first year of operation.

PART 2 PRODUCTS

2.01 GENERAL

A. Control and regulator valve designs shall be based on the requirements of the application, process operating conditions, this Specification, and the Project Piping Specification (Section 40 50 20, Aboveground Power Plant Piping). Each control valve shall be designed and manufactured to properly integrate with the control loop it is being used for.

2.02 APPLICATIONS

A. Applications, common names and uses, and their key attributes covered under this Specification are defined in Chapter 12 of the ISA Guide "Control Valves, Practical Guides for Measurement and Control," and are summarized below:

1. Process Control/Feed Regulation:

Application	Common Names and Uses
Chemistry Control (Conductivity, pH, ORP, dissolved oxygen, etc.)	ACV
Flow Control	FCV, Throttling
Level Control	LCV, Deaerator, Heater Drain
Pressure Control	PCV, Injection
Pressure Reduction, Back Pressure	PRV, Gas Regulator
Temperature Control	TCV, Deaerator Spray

2. Key attributes for process control/feed regulation applications are accuracy of control resulting from small signal changes, and high rangeability resulting from increased pressure differentials that exist across the control valve during startup, shutdown, and low-load process conditions. Control valves shall meet these attributes.
3. The key attribute for continuous letdown applications is accuracy of control. Control valves shall meet this attribute.
4. Key attributes for intermittent letdown applications are tight shutoff and fast stroke speeds. Control valves shall meet these attributes.
5. Key attributes for recirculation applications are tight shutoff, anti-cavitation and/or low noise trim, and pipe vibration elimination. Control valves shall meet these attributes.

2.03 PROCESS OPERATING CONDITIONS

A. Process Data:

1. For each control valve or regulator, process data shall be specified on Valve Data Sheets for the following three flow conditions as a minimum: Normal flow rate, maximum flow rate, and minimum flow rate. Other flow conditions shall be included if relevant to the particular application.
    a. Normal Flow Rate: This flow condition is generally referred to as the design flow or material balance flow.
    b. Maximum Flow Rate: This flow condition shall be consistent with the plant or equipment operational maximum flow condition. The maximum flow condition is generally the governing case for required maximum C_v capacity.
    c. Minimum Flow Rate: This flow condition shall be consistent with the plant turndown requirement or equipment turndown capability. The minimum flow condition generally subjects the control valve to the highest differential pressure condition. The minimum flow conditions are generally the governing case for the required trim performance.
        1) Minimum and normal flow conditions shall also be specified for control valve services identified with "normally no flow" as well as the required flow conditions during non-normal plant operating conditions such as startup, venting, depressurizing, etc.
        2) Sizing calculations shall be provided for all specified flow conditions.
2. Data Sheets: Individual control valve specification requirements shall be specified on Valve Data Sheets. The Contract Documents provide general Valve Data sheets templates. Customize each data sheet for the specific application and fill in all based on specific customized calculations.
3. Seat Leakage:
    a. Seat leakage classification shall be in accordance with ANSI/FCI 70-2. The leakage class shall be determined by the service application. Soft-seated valves shall not be applied in services with design temperature conditions over 450 degrees F (230 degrees C) or in flashing liquid services.
    b. Leakage problems are commonly related to insufficient seat loading. While a control valve with insufficient seat loading may pass a specified leakage test after it is manufactured, the same valve shall not meet the specified leakage rate after it has been subjected to thermal distortion, flashing, or erosive service.
    c. Seat ring circumference is defined as the line of contact between the plug and the seat when the valve is in the fully closed position.
    d. The maximum shutoff differential pressure shall always be calculated and specified for the selected control valve. For all metal-to-metal shutoff applications equal to or exceeding ANSI/FC1 70-2 Class IV requirements, actuator load calculations shall be provided. Calculations are required to show the minimum

load to be applied to the plug-seat arrangement for meeting the required shutoff specifications.

2.04 CONTROL VALVE AND REGULATOR SIZING

A. Valves and actuators shall have a minimum design life of 25 years at the specified conditions, excluding items such as gaskets, packing, trim, elastomer parts, and lubrication materials.

B. Each control valve or regulator shall be sized and selected to provide reliable operation and control at the specified operating and design conditions. Control valve sizing shall generally be based on ISA S75.01, “Flow Equations for Sizing Control Valves.” Deviation from the ISA formulas may be permitted provided that the deviation and associated justification are detailed in the technical quotation.

C. Minimum trim performance requirements shall be accurately evaluated.

D. Control valve body size shall not be more than one line size smaller than the upstream pipe. If greater reduction is required, reduced trim shall be used, or associated piping shall be revisited to determine if line size is appropriate.

E. All control valves in continuous service shall be installed with full line size block valves and if necessary, a bypass valve; omission of bypass valve shall be approved in writing by the Engineers. Other control valves not having isolating block valves and bypass valve shall have a de-clutchable handwheel for manual operation. Handwheel gearing shall be capable of opening or closing the valve under full differential pressure. At or near the handwheel shall be an indicator showing valve directional movement, including an indication of full open and full closed. Top mounted handjacks shall only be used for limit stops.

F. Cage trim globe valves are preferred for most services up to 4-inch size. Rotary valves may be used for larger sizes where process conditions permit their application. Post guided valves may be used in low pressure applications (less than 150 psi pressure drop).

G. Piping Geometry Factor, FP: For valves mounted between pipe reducers or other pipe fittings, the calculated valve capacity shall be corrected for a decrease in valve capacity conforming to ISA S75.01. The piping geometry factors FP, control valve correction factor, calculated F_{LP} and/or X_{TP} factors shall be specified as part of valve selection and sizing.

H. Control valve noise level shall not exceed 85 dBA at 1 meter under any of the specified flow conditions. Contractor shall furnish predicted noise level for each control valve.

I. Position switches shall be provided on modulating valves where it is necessary to prove position. Position switches shall be preferably proximity style, but other mechanically actuated types may be acceptable with written approval from the Engineers. Position switches shall be form C, hermetically sealed, dry contact type with 1/2-inch or 3/4-inch NPT electrical connections. Position switches shall be rated minimum 2A at 30V dc, 5A at 120V ac.

J. Body Size:

1. Control valve bodies with reduced trims shall be considered for applications with the following conditions:
    a. Pressure drop in excess of 750 psi (5,170 kPa).
    b. Gas/vapor outlet velocities in excess of 0.3 Mach.
    c. High noise exceeding 85 dBA.
    d. Choked flow.
    e. Flashing exceeding 5 percent weight of liquid being vaporized.
    f. Erosive fluids.
    g. Future capacity increase is anticipated.
2. In all cases, the control valve nominal body size shall not exceed the nominal line size, nor shall it be less than 1/2 of the nominal line size. The minimum body size shall be 3/4 inch. Reduced trim shall be used where process conditions require smaller C_v's.

K. Minimum Rangeability: The installed rangeability (actual available rangeability) of each control valve in the process system shall meet all flow conditions specified. The specified minimum flow conditions shall be fully controllable. The trim shall operate above 10 percent travel at minimum flow.

L. Minimum control valve size shall be 3/4 inch. If smaller sizes are required, reduced trim shall be used. 1-1/4-, 2-1/2- and 5-inch sizes shall not be used. All 1 inch and larger control valves shall be flanged, socket welded, or butt welded as required by Project Piping Specifications. Slip-on flanges are prohibited.

M. Control valves in pressure classes 900 and higher shall have socket or butt welded ends as required by Project Piping Specifications.

2.05 CONTROL VALVE AND REGULATOR DESIGN

A. Minimum Rating:

1. The valve type, materials, end connection, body wall thickness and pressure rating shall meet or exceed the Project Piping Specification, Section 40 50 20, Aboveground Power Plant Piping.
2. The valve shall be rated to meet the design pressure and design temperature of the application.
3. For flanged valves, the valve body rating shall never be lower than the flange rating. The flange rating for valve bodies smaller than 16-inch nominal size shall be minimum ASME Class 300 unless indicated differently on the Valve Data Sheets. Flange rating for valve bodies 16-inch nominal size and larger shall be minimum ASME Class 150.
4. Unless specified otherwise on the Valve Data Sheets or in the Project Piping Specification (Section 40 50 20, Aboveground Power Plant Piping), all valves in ANSI class 150# through 600# shall have raised face flanged end connections. Flanges shall be in accordance with ASME B16.5.

B. Materials:

1. Control valve body materials shall meet, or exceed, the requirements of the application. Body and trim materials shall meet the temperature requirements.
2. Body material shall normally be carbon, alloy, or stainless steel, as required by the application and in compliance with The Project's Piping Specification. Cast or ductile iron shall not be used. Standard valve trim shall be stainless. Other materials shall be considered and shall be defined as specialty valve trims. Brass, copper, or copper bearing alloys shall not be used for any service. PTFE V-Ring packing shall be used for temperatures of minus 40 degrees F to plus 450 degrees F. Grafoil packing shall be used for temperatures above 450 degrees F.
3. Trim materials shall be selected to withstand corrosion, erosion, and wear under severe service conditions. Material combinations shall be selected for maximum galling resistance. AISI 200 and 400 series stainless steel, or Engineer-approved equivalent, shall be used as a minimum.
4. Hard facing or heat treating shall be applied to trim seating surfaces of valves per manufacturer recommendations but, as a minimum, they shall include erosive applications, steam applications with pressure drop conditions exceeding 50 psi and applications with pressure drop conditions exceeding 580 psi.
5. Packing shall be compatible with packing box and trim materials, packing box dimensions and tolerances, surface finish of packing box and stem, stem speed, spacers, and design temperature. Packing shall be

PTFE V-ring or graphite type (see Paragraph Gaskets, Packing and Bonnet).

6. Like parts of valves of the same class, size and model shall be interchangeable. Parts subject to wear, erosion, corrosion or other deterioration, or requiring periodic adjustment, inspection or repair shall be accessible and capable of reasonably convenient removal, easy replacement, and repair.

C. Flow Direction:

1. Flow direction arrows shall be cast on the valve body, or otherwise permanently attached to the valve.
2. For balanced trim valves, flow direction for liquid service applications shall be flow-to-close and flow direction for gas service applications shall be flow-to-open.
3. For unbalanced valve trim, flow shall be to close to prevent very large unstable forces in the nearly closed position.

D. Trim Design:

1. Valve trim shall be of the quick-change type for ease of maintenance. Trim shall be designed to provide equal pressurization around the plug in order to minimize vibration and prevent any potential for binding. Control valve trim design shall be selected to meet the requirements of this Specification.
2. Contractor shall have a minimum of 5-years' experience with any proposed control valve trim design.

E. Gaskets, Packing and Bonnet:

1. Body gaskets for temperatures below 450 degrees F shall be PTFE "or-equal". Over 450 degrees F, a spiral-wound gasket, grafoil-type gasket, or equal shall be used. In all cases, valve gaskets for body/ bonnet joints or bottom flange joints shall be metal seal or spiral-wound stainless steel with nonasbestos or Teflon filler suitable for the operating and design conditions.
2. PTFE V-ring packing shall be used for services up to 450 degrees F. Above 450 degrees F, graphite or manufacturer's recommended packing shall be used.
3. A standard bonnet shall be specified for temperatures of 32 degrees F to 450 degrees F. Above 450 degrees F and below 32 degrees F, an extended bonnet and/or special packing shall be considered. Manufacturer's recommendation shall be evaluated and followed when feasible.

F. End Connections: End connections shall be specified on Valve Data Sheets.

1. Flanged Connections:
   a. Flanged connections shall comply with ASME B16.5. Dimensions of flanges larger than 24-inch size shall comply with industry standards. Raised face (RF) flanges shall be used for lines rated up to and including ASME Class 600 and up to a design temperature of 900 degrees F. The gasket contact surface of raised face flanged valves up to and including ASME Class 600 ratings shall be smooth machine-finished with a smoothness of 125 to 250 AARH.
   b. Ring joint (RTJ) flanges shall be used for lines rated ASME Class 900 and above, and for design temperature conditions exceeding 900 degrees F. Ring grooves shall comply with ASME B16.20.
   c. Unless otherwise noted on Valve Data Sheets, face-to-face dimensions of flanged valves and end-to-end dimensions of butt-weld valves shall comply with ASME B16.10. Contractor to advise in writing if alternate face-to-face dimensions are proposed.
2. Butt-Welded Connections:
   a. Welded connections on valves 2-1/2 inches and larger shall be butt-weld type.
   b. Schedules and wall thicknesses of butt-welded connections shall comply with the Project Piping Specification, Section 40 50 20, Aboveground Power Plant Piping. Schedule and wall thickness shall be provided on Valve Data Sheets.
   c. Beveled in accordance with ASME B16.25.
   d. Bored to match pipe schedule specified on Valve Data Sheets.
   e. Schedule bore ends for carbon steel shall be beveled in accordance with ASME B16.25 Fig. 2(a).
   f. Schedule bore ends for alloy steel shall be beveled in accordance with ASME B16.25 Fig. 4, 5(b) or 6(b).
   g. Backing rings are prohibited.
3. Socket-Welded Connections for 2 inches and smaller valves:
   a. Welded connections on valves 2 inches and smaller shall be socket weld type.
   b. Schedules and wall thicknesses of socket-welded connections shall comply with the Project Piping Specification, Section 40 50 20, Aboveground Power Plant Piping. Schedule, wall thickness and rating class (typically CL3000 minimum or CL6000) shall be provided on Valve Data Sheets.
   c. Shall comply with ASME B16.11 and ASME B16.34 paragraphs 6.2 and 6.3.

2.06 CONTROL VALVE AND REGULATOR PERFORMANCE

A. Noise:

1. The maximum noise level emission from a control valve or regulator manifold installation, including contributions from piping elbows and reducers, shall not exceed the following limits for any specified operating condition measured 1 meter from the valve:
   a. 85 dBA for process control/feed regulation, continuous letdown, intermittent letdown daily service, and recirculation daily service applications.
2. Noise shall be calculated in accordance with methodology outlined in ISA SP75.17 and IEC 534-8-3 guidelines. The maximum noise levels are specified in terms of equivalent continuous A-weighted Sound Pressure Levels (SPL) with an upper tolerance of plus 0 dBA. Inaccuracy of calculated noise levels shall be listed in valve proposal. Noise emission from control valves, including upper tolerance, shall be guaranteed not to exceed the above-stated limits for any specified operating condition.
3. Control valve noise shall be treated at the source except as noted below. The provision of low-noise multipath multistage trim designs is generally most cost effective. Diffusers, baffle plates, and silencers, either inside the valve body or downstream of the valve, shall not be permitted for the following applications:
   a. Process control/feed regulation.
   b. Continuous letdown.
   c. Intermittent letdown in daily service.
   d. Recirculation in daily service.
4. For other applications, special attention shall be given to the limited flow rangeability of these devices (i.e., noise reduction from these devices is generally reduced at low flow conditions). Noise generated by diffusers or orifice plates shall be calculated by ISA SP75.17 or IEC 534-8-3 as a separate system from the valve trim and included in the overall noise source.
5. A maximum of 5 dBA credit may be used for the application of insulation for noise reduction.
6. Detailed noise calculations shall be submitted with the proposal in accordance with methodology outlined in ISA SP75.17 and IEC 534-8-3 guidelines. The calculation basis and results shall be shown for manual or computer calculations. Control valves supplied shall be guaranteed to meet the above requirements.

B. Vibration and Erosion Limits:

1. Proper control valve or regulator selection shall ensure that the required energy can be dissipated without exceeding the maximum vibration levels in the piping system and without exceeding the wear properties of

the trim material. Control valve trim design shall be selected to facilitate maximum reduction of control valve induced vibration and trim wear.

2. Control valve vibration and trim erosion can be reduced by multistage multipath trim designs. In order to minimize vibration, control valves shall be selected based on Table 12.3 of the ISA Guide, "Control Valves, Practical Guides for Measurement and Control" summarized below:
   a. Liquid Service Applications: The design shall provide a sufficient number of discrete pressure drop stages to maintain the trim exit velocity below 100 feet per second for single-phase liquids and 75 feet per second for cavitating, flashing, and/or erosive services. Contractor shall specify number of discrete pressure drop stages required and provide body and trim exit velocity calculations with proposal. The calculation basis and results shall be shown for manual or computer calculations.
   b. Gas Service Applications:
      1) The design shall provide a sufficient number of discrete pressure drop stages to maintain the trim exit fluid velocity head (V_h) below 70 psia for continuous or intermittent duty and 150 psia for infrequent duty. Valve trim exit fluid velocity head shall be calculated based on ISA Guide, "Control Valve, Practical Guides for Measurement and Control" as follows:

         $$V_h = \text{Kinetic Energy} = p_o V_o^2 / (2\, g_c)$$

         Where:

         p_o = valve trim exit fluid density
         V_o = valve trim exit fluid velocity
         g_c = gravitational constant in unit of measurement

      2) Contractor shall specify number of discrete pressure drop stages required and provide body and trim exit fluid velocity head calculations with proposal. The calculation basis and results shall be shown for manual or computer calculations.

C. Cavitation, Choked Flow and Flashing:

1. ISA S75.01, the ISA Guide, "Control Valves, Practical Guides for Measurement and Control" and the manufacturer's valve cavitation index data shall be used for determining the severity of cavitation, choked flow, or flashing conditions in the control valves. Control valves shall be designed to prevent cavitation damage.
2. The design of valves in cavitation and flashing service shall be based on Chapter 7 of the ISA Guide, "Control Valves, Practical Guides for Measurement and Control" and include the following techniques for cavitation-resistant valves:
   a. Reduce the pressure in multiple stages.
   b. Direct flow away from the valve body and pipe walls.
   c. Break the flow into many small streams.

d. Force the flow through multiple turns or tortuous paths.

3. The design shall provide a sufficient number of discrete pressure drop stages to maintain the trim exit velocity below 75 feet per second for cavitation and flashing service. Contractor shall specify number of discrete pressure drop stages required and provide body and trim exit velocity calculations with proposal. For multiconstituent fluids, special consideration shall be given to the potential for cavitation of the minor components in the fluid.
4. Contingencies on the minimum required control valve cavitation index shall be applied to compensate for inaccuracies in process data and inaccuracies in manufacturer's control valve cavitation index data.

D. Flow Characteristic: control valve flow characteristics shall be selected to meet the rangeability requirements as defined in paragraph 2.04.G, Minimum Rangeability, and to provide stable control over the required range of operating conditions. Manufacturer shall select the control valve flow characteristic specified on the Valve Data Sheet.

E. Valves in liquid service shall not cavitate under any service conditions. Any level of cavitation is unacceptable.

2.07 VALVES

A. Control valve – Rotary:

1. Rotary motion control valves shall be segmented ball, eccentric disc/plug or butterfly type.
2. Rotary motion control valves design shall be:
   a. One-piece cast body with integral or bolted bonnet (split body design is not allowed).
   b. Trunnion-mounted closure member (floating closure member is not allowed).
   c. Allow throttling control up to 90-degrees rotation.
3. The type of rotary motion control valves shall be selected adequately selected to the designated application as per the recommendations of the Valve manufacturer.

B. Control Valve – Butterfly:

1. Butterfly valves shall be considered in the following situations if economically attractive and also side-entry is acceptable:
   a. A high flow rate with a low pressure drop.
   b. For corrosive services where a body lining is required.
2. Butterfly valves shall be an integral flanged body or lug type (wafer type valves are not permitted).

C. Pressure regulating valve:

1. Pressure or temperature regulator valves are self-operated service regulators. They shall be used only in instances of low-pressure fuel gas, air, inert gas, and water services. Local indication of controlled media shall be available.
2. Pressure or temperature regulator valves shall be of a manufacturer's standard construction and materials. The valve supplied shall have materials suitable for the application.

D. Open/Close Valves:

1. Rotary motion on/off valves shall be ball.
2. Rotary motion control valves design shall be:
    a. Type: Ball, Regular Port, Trunnion (Fire Safe, Valve, seat, and stem packing shall incorporate anti-static design, which is suitable for natural gas service).
    b. Rating: Class 150 or as defined in the datasheet.
    c. Standards: ASME B16.34, ASME B16.10, API 607.
    d. Flanged, Class 150RF, ASME B16.5.
    e. Body Material: Carbon Steel, ASTM A105/A105M or A216/A216M, Grade WCB.
    f. Bolting: ASTM A193/A193M, Grade B7
    g. Ball: Type 316 Stainless Steel.
    h. Seat: Reinforced Teflon.
    i. Stem Type/Material: Trunnion, Type 316 Stainless Steel.
    j. Packing: Flexible Graphite.
    k. Operator As defined in the datasheet.

E. The type of rotary motion control valves shall be selected adequately selected to the designated application as per the recommendations of the valve. Manufacturers: For the above-mentioned valves:

1. Fisher Valves.
2. Floserve Valves.
3. Masoneilan valves.
4. Bray Vales.
5. Or approved manufactures.

F. The class rating shall be established to provide a general guide for selection of the appropriate valve pressure-temperature ratings. The class rating for steel valves shall be in accordance with ASME B16.34. The valve rating and materials shall be suitable for the design temperature at the design pressure, or valve set pressure plus accumulation, whichever is greater.

G. Valves shall be properly selected and have acceptable ASME B16.34 pressure-temperature ratings that meet or exceed the system design pressure and temperature requirements.

H. Pressure relieving devices shall be used on all pressure vessels, exchangers, and all of the equipment and piping as specified by the appropriate codes.

2.08 SAFETY, RELIEF AND ON/OFF VALVES

A. Safety, relief, and safety relief valves shall normally be of the direct spring loaded type. Pilot operated or balanced bellows type relief valves may be used with written approval from the Engineers.

B. Pressure relief valves are classified as safety valves, relief valves, or safety relief valves. These valves are defined as follows:

1. Safety Valve: An automatic, reclosing, pressure-relieving device actuated by the static pressure upstream of the valve characterized by full opening pop action at valve set pressure. Safety valves are used for steam, gas, or vapor service.
2. Relief Valve: An automatic, reclosing, pressure-relieving device actuated by the static pressure upstream of the valve which opens in proportion to the increase in upstream static pressure over the valve set pressure. Relief valves are primarily used for liquid service.

C. Safety Relief Valve: An automatic, reclosing, pressure-relieving device suitable for use as either a safety or relief valve depending on the application.

1. Manufacturers:
   a. Baker Hughes Consolidated.
   b. Anderson Greenwood.
   c. Crosby.
   d. Pentair.
   e. “Or-equal.”

D. On/off control valves shall be provided with limit switches for fully opened and fully closed feedback to the control system. Limit switches shall preferably be proximity type, but other mechanically actuated styles may also be acceptable with written approval from Engineers. Limit switch contacts shall consist of form C, hermetically sealed, dry contact type with 1/2-inch or 3/4-inch NPT electrical connections. Limit switches shall be rated minimum 2A at 30V dc, 5A at 120V ac.

E. Shutdown valves shall have fail-safe actuators.

F. Shutdown valves specified as “Fire Safe” shall meet the requirements of API 607.

G. All tubing shall be seamless Type 316 stainless steel. Tube fittings shall be stainless steel compression fittings, ferrule style.

H. Solenoid valves shall be complete with suppression diodes.

I. Solenoid valves supplied with on/off control valves shall have continuous duty encapsulated coils with Class H insulation and shall be powered by 24V dc unless otherwise specified by the Engineers.

J. Solenoid valves supplied for emergency operation on modulating control valves shall have continuous duty encapsulated coils with Class H insulation and shall be 24V dc powered unless otherwise specified by the Engineers on valve Data Sheets.

K. Solenoid valve coil enclosures shall be rated minimum NEMA 4X and shall be explosion proof for Class 1, Division 2, Group D areas.

L. Solenoid Valve for antisiphon fuel oil service shall be Morisson Brothers Model 710 normally closed hung piston design with integral thermal relief.

2.09 ACTUATOR SELECTION

A. Contractor shall be responsible for correctly sizing the actuators based on the process operating conditions and this Technical Specification.

B. Actuator systems shall be typically pneumatic type, either diaphragm or double-acting piston. Pneumatically actuated spring and diaphragm actuators are preferred. Double-acting piston or motor operated actuators may be acceptable with written permission from the Engineers, or if called for on Data Sheets. For applications with valve bodies greater than 2-inch nominal size and pressure drop in excess of 580 psi, diaphragm actuators shall not be applied. Piston actuators may be used where high thrust or long stroke is required. The actuator shall be sized to shut off against at least 110 percent of the maximum shutoff pressure. Pneumatic actuators shall be designed to function with instrument air supply ranging from 60 psig to 125 psig.

C. Motor-operated valves, in general, shall not be used for modulation. In cases where air is not available or the force required to actuate and seat the valve exceeds pneumatic valve capability, motor operated valves may be considered with written permission from the Engineers.

D. Motor Operated Actuators:

1. Refer to Section 26 05 05, Low Voltage AC Induction Motors, for technical requirements for motor operators.
2. Shall comply with ANSI C540 and NEMA MG1.
3. Size to 1-1/2 times required operating torque. Motor stall torque not to exceed torque capacity of the valve. Size for maximum differential pressure and size for double disc friction, where applicable. The maximum differential pressure shall be the design pressure on the Data Sheet.
4. Provide stem protection for rising stem valves.

5. Actuator Operation - General:
    a. Suitable for full 90-degree rotation of quarter-turn valves or for use on multiturn valves.
    b. Manual override handwheel.
    c. Local Valve Position Indication.
6. Electronic Control Module shall have the following features as a minimum:
    a. Setup of the actuator shall be available through a push button, menu driven interface at the actuator controls or through remote communications with a Laptop computer.
    b. Controls shall be designed to configure valve parameters and setup limit switches without opening the actuator's enclosure.
    c. All configurable settings shall be stored in EEPROM.
    d. Over-torque detection and protection.
    e. Jammed-valve detection and protection.
    f. Motor over-temperature detection and protection.
    g. Incorrect phase rotation detection and protection.
    h. Lost phase detection and protection.
    i. Dynamic braking to limit overrun (for modulating service).
    j. Instantaneous reversal detection and protection.
    k. Automatic self-test and diagnostics.
    l. On-board data logger for torque and position profiles and statistics, time and date stamped.
    m. Capable of downloading data logs and statistics to a laptop computer for troubleshooting and analysis.
7. Motor operator terminal enclosures shall be rated NEMA 4X minimum or better as specified on the Valve Data Sheets.
8. Terminal enclosures shall be furnished with space heaters in the limit switch and motor compartment. Motor compartment heaters shall be interlocked with actuator operation. Heaters shall be rated for 240V ac and operated at 120V ac.
9. Motors shall have electromechanical or electronic reversing motor controllers rated up to 60 starts/hour for ON/OFF and Throttling service, and continuous duty rated for modulating service.
10. Actuator Power Supply:
    a. 480V ac, 3 phase, 3 wire, 60-Hz, unless otherwise specified on Valve Data Sheets.
    b. Internal control power transformer with primary and secondary fuses, 120V ac secondary.
    c. Externally operable power disconnect switch.
    d. 120V ac space heater (rated for 240V ac, operated at 120V ac).
11. Limit switch and status contacts shall be dry type, SPDT, rated for 5A at 120V ac and 2A at 30V dc.
12. Motor insulation shall be class F, non-hydroscopic, sealed, encapsulated, or otherwise protected in accordance with the requirements of NEMA MG-1.
13. Controls and indications:

a. Local controls to allow opening, closing, stopping in mid travel, and Jogging, as specified on Valve Data Sheets.
b. Status Contacts for monitoring by Plant Control System:
    1) Fully Opened.
    2) Fully Closed.
    3) At least one contact that can be programmed to actuate at any position between 0 and 100 percent opened.
    4) Local/Remote status.
    5) Fault.
c. Command terminals that accept dry contacts for remote control from Plant Control System, as specified on Valve Data Sheets:
    1) OPEN command (momentary for ON/OFF or throttling service, maintained for modulating service).
    2) CLOSE command (momentary for ON/OFF or throttling service, maintained for modulating service).
    3) STOP command (for throttling service).
d. Current position transmitter (if specified on Valve Data Sheets), isolated 4 to 20 mA DC loop powered signal in proportion to 0 to 100 percent OPENED, with 0.5 percent accuracy and 0.5 percent repeatability, capable of driving a 750 ohm load, for connection to and monitoring by the Plant Control System.
e. Analog Position Controller (for modulating service, if specified on Valve Data Sheets):
    1) Provides remote control of valve position from external isolated 4 to 20 mA DC signal with 0.5 percent accuracy and 0.5 percent repeatability.
    2) Deadband and motion inhibitor to prevent hunting.

14. Motor operators and all required accessories shall be furnished and mounted on the valve.
15. A completed AC Motor Data Sheet shall be submitted for all motor operated valves; refer to Division 26, Electrical.
16. Manufacturers:
    a. Auma.
    b. Rotork.
    c. Limitorque.

E. All required accessories, such as control solenoids, limit switches, positioners, filter regulators, etc. shall be furnished, mounted, tubed and calibrated.

F. Air operators shall be sized to operate the valve through its complete cycle against the opening and closing load with an air source of 60 psig.

G. All air operators shall be capable of operating the valve with 60 psig air pressure. All air operators shall be capable of withstanding without damage a maximum air pressure of 150 psig. If air pressure regulators or filter/regulators are needed to provide this capability, they shall be provided as part of the operator. Filter/regulator shall be Fisher type 67 CFR with gauge or Engineer-approved equivalent.

H. Pneumatic signals shall be 3-15 psig.

I. Position of the operator shall be manufacturer's standard unless otherwise noted on the Valve Data Sheet.

J. Air operator failure position upon loss of air pressure shall be identified on the Valve Data Sheet. Air operators shall preferably be the single acting spring and diaphragm type. Upon loss of air pressure, the operator shall be designed to move the valve disc or plug to the fail-safe mode on spring energy only. Springs shall be sized to operate the valve against a differential pressure equal to the design pressure given on the Valve Data Sheet.

K. Piston actuators may be used when necessary.

L. Solenoid valves shall be manufactured by Automatic Switch Co (ASCO) or Engineer-approved equivalent.

M. Materials:

1. Materials and rating of the pneumatic actuators shall be suitable for the application and the operating environment.
2. Pneumatic Tubing and Fittings: Materials of the pneumatic tubing and fittings shall be a minimum of AISI Type 316 stainless steel. Carbon steel, copper, bronze, brass, and AISI Type 304 stainless steel materials shall not be used on a control valve and actuator assembly. Air tubing, fittings, or connection nipple sizes shall not be less than 1/4-inch NPT.
3. Tubing shall be manufactured by Swagelok or Engineer-approved equivalent.
4. Tube fittings shall be Swagelok or Parker Type 316 stainless steel ferrule type compression fittings or Engineer-approved equivalent.

N. Performance:

1. Valve Travel Position Accuracy: The total maximum inaccuracy of the valve travel position due to any limitation (i.e., repeatability, deadband, resolution, hysteresis, etc.) shall be less than 2.0 percent.
2. Stability: In modulation, no more than one overshoot greater than 2.0 percent shall be observed during shop performance and field testing. Test reports shall be submitted with proposal showing performance curve of previous experience with the same specification.
3. Fail Position:

a. Air failure position shall be accomplished without the aid of process pressure conditions. Air failure position shall be testable during inspection and during plant commissioning when piping systems are depressurized.
b. When an internal spring return feature cannot achieve the failure mode of a piston actuator, piston actuators shall be equipped with a fail-safe trip system. Boosters may be applied, as required, to meet actuator stroke response requirements on large or fast control signal changes.

4. Stroke Speed Requirements:
   a. Control valve and actuator assembly shall be selected to achieve the stroke speed requirements specified on the Valve Data Sheets.
   b. All applications need to be verified for the actual stroke speed requirements. Stroke times shall be tested on a 100 percent control signal step change without the aid of process pressure conditions. Stroke times shall be tested during manufacturer inspection. Manufacturer shall document the test criteria and results of the functional tests performed during factory inspection to verify operability and stroke speed. Boosters may be applied to meet stroke time requirements, but stroke movements shall remain stable at 20 percent, 50 percent, and 80 percent control signal step changes.
   c. Fast stroke time requirements under failure conditions shall be separately specified on Valve Data Sheets. Quick-exhaust valves may be used, provided that they do not interfere with the normal control operation of the actuator system.

O. Actuator Yoke: Yoke assemblies shall be cast or welded. Bolted yoke assemblies are not to be used. Yoke assemblies shall be designed such that they shall accept installation of all accessories needed to meet the requirements of this Specification.

P. Manufacturers:

1. Fisher.
2. Masoneilan.
3. Flowserve.

2.10 ACCESSORIES

A. Each control valve shall be provided with accessories such as valve positioners, I/P converters, limit switches, transducers, solenoid valves, filter regulators, hand jacks, etc. as required by service or as specified elsewhere in this document. These devices shall be mounted on the control valve, where practicable.

B. All control valves shall have position indicators mounted on the stem and visible to the operator.

1. Positioner shall function as an intelligent (HART) digital valve positioner and controller.
2. Pneumatic positioners shall preferably be Fisher DVC6000 series intelligent digital valve controllers. Alternate positioners may be acceptable with written permission from Owner.
3. Valve positioners shall be provided with gauges to indicate air supply pressure and output pressure to the valve.
4. Positioner shall respond to 0.05 percent step changes in both directions.
5. Input and Output Signals:
    a. Input control signal shall be 4 to 20 mA. HART capable control signal shall be considered if available and supported by control system.
    b. Output position transmitter signal shall be 4 to 20 mA. Position feedback via HART protocol on input control signal shall be considered if available and supported by control system.
6. Integral electro-pneumatic transducer which utilizes the latest technology. Flapper style air control assemblies are not acceptable.
7. Integrally mounted valve positioners shall not be used in potentially severe vibrating service conditions. In these cases, the positioner shall be mounted separately from the valve and actuator assembly.
8. The accuracy of the positioner shall be 0.5 percent of span.
9. Local pneumatic AUTO/MANUAL switch (when specified on Valve Data Sheet).

C. Handwheels: When handwheels are required, they shall meet the following requirements:

1. Neutral position shall be clearly indicated.
2. Handwheel mechanism shall not add friction to the actuator.
3. Maximum rim pull shall be a maximum of 50 pounds.
4. Handwheels for rotary valves shall be mounted on the valve shaft and shall include a clutching and de-clutching arrangement.
5. Handwheels for large valves shall be gear-assisted.

D. Limit Switches: When limit switches are required, they shall meet the following requirements:

1. Limit switches shall be actuated by a mechanical switch or proximity sensor.
2. Limit switch enclosures shall be hermetically sealed.
3. Switch contact outputs shall be dry contact, single-pole, double-throw (SPDT).

E. Limit Stops: When limit stops are required, they shall meet the following requirements:

1. Limit stops shall be mechanical devices mounted on the actuator that prevent the valve from opening past a set position.
2. The limit stops shall be so designed that they prevent tampering with the set position and require a special tool to reset.
3. Limit stops shall not be part of the handwheel assembly.

F. Valve Position Indicator: When position indicators are required, they shall meet the following requirements:

1. The indication pointer shall be directly connected to the stem or shaft.
2. The valve position shall be indicated on a reversible scale with clearly graduated markings at 25 percent valve opening position intervals and the words OPEN and CLOSED at the valve travel limits.

G. Valve Position Transmitter: An electronic travel position transmitter, either separate or integral to the positioner providing a proportional valve stem or shaft position signal, shall be supplied. Valve position sensing shall be accomplished using a noncontact, solid-state, Hall-Effect sensor.

H. Filter-Regulator Air Set: Filter regulators shall be provided for <u>all</u> control valves (On/Off service as well as Modulating service), unless otherwise specified or noted. The air regulator set shall comply with the following requirements:

1. Aluminum body and spring case.
2. Filter.
3. 1/4-inch NPT minimum connections.
4. Square head outlet pressure adjusting screw.
5. Outlet pressure gauge.
6. Minus 20 degrees F to Plus 180 degrees F operating temperature.
7. Can operate on 60 psig typical instrument air pressure.
8. 250 psig maximum inlet pressure.
9. Outlet pressure as required by actuator.
10. Internal relief valve.

I. Solenoid Valves: The solenoid valve shall comply with the following requirements:

1. Stainless steel body.
2. 1/4-inch NPT minimum connections.
3. Mounted as close as possible to the valve actuator and always downstream of the control valve positioner.
4. Continuously powered and rated for the hazardous area classification.
5. Solenoid Voltage shall be 24V dc unless otherwise specified on Valve Data Sheets.

6. Coil shall have built-in surge suppression.
7. Coil insulation shall be Class H.

J. Volume Tanks:

1. Minimum Rating: Volume tanks shall be mechanically designed to withstand a minimum pressure of 135 psig. Volume tanks shall be manufactured in accordance with ASME VIII. Division 1 (stamped UM) requirements, or equivalent.
2. Sizing: Volume tanks shall have a minimum capacity for two complete stroke operations of the control valve at the minimum available instrument air pressure of 60 psig.

2.11 MARKING AND IDENTIFICATION

A. Nameplates: All valves and accessories shall be tagged with manufacturer's standard nameplate in accordance with standard industry practices. The tag shall bear all pertinent instrument information such as manufacturer, model number, serial number, body and trim size, ANSI rating, etc. In addition, each valve shall include a permanently attached stainless steel nameplate engraved or stamped with the valve tag number. Wired-on tags are not acceptable.

B. Identification Tags:

1. In addition to nameplates, each valve accessory and loose item shall be furnished with a permanently attached stainless steel identification tag stamped with applicable tag number.
2. Valve tag number as indicated in Section 01 58 53, Project Equipment Identification for tagging and numbering.

C. Marking: Control valve body/bonnet, flanges, etc., shall be marked in accordance with ANSI/ASME B16.34. The direction of flow shall be cast or steel-stamped on the valve body or, alternatively, a stainless steel arrow shall be permanently fixed to the body by rivets or screws for all appropriate valves that have been designed or selected for a specific flow direction.

2.12 PAINTING

A. All parts that are not corrosion resistant by material selection shall be protected from corrosion by the environment. Manufacturer’s standard paint specifications shall be used unless otherwise specified on Valve Data Sheets. The valve stem and any other moving parts shall not be painted but shall be otherwise protected from the environment.

2.13 SOURCE QUALITY CONTROL

A. Tests:

1. The manufacturer and Contractor shall have an auditable program for quality control. The program shall ensure that all equipment supplied is new, meeting and/or exceeding all applicable requirements.
2. The Owner or Owner's representative has the right to enter the manufacturer's or Contractor's facility at any time during the manufacture of an order for inspection of processes and procedures.
3. Valves shall be inspected using manufacturer's standard non-destructive examination procedures. Defects shall also be identified and repaired using the manufacturer's standard procedures.
4. Pressure boundary hydrostatic testing shall be in accordance with ANSI/ASME B16.34. Valves shall not be painted before the shell hydrostatic test is complete.
5. The shell hydrostatic test shall be performed prior to the main seat leakage test. The valves shall show no leakage during hydro-test.
6. Following the shell hydrostatic test, a main seat leakage test shall be performed. The hold time shall be a minimum of five minutes. Main seat leakage shall not exceed the limits for the ANSI Class specified on the Data Sheets: Seat leakage test pressures shall be per ANSI/FCI 70-2.
7. A performance test shall be performed after the hydrostatic test by which the valve, actuator and accessories shall be completely assembled and tested for hysteresis, stroke time and deadband. If the valve has a handwheel, limit switches or position transmitter, they shall be checked for function at this time.
8. All test documentation shall be supplied for review.
9. Field hydro-testing shall be performed by others on the systems in which the valves shall be installed. Manufacturer shall advise of any limits and precautions applicable to the valves for the onsite system hydro-test.
10. Torque and limit switches shall be set by the valve actuator manufacturer after assembly with the valve.
11. Each completed electric motor operated valve assembly shall be cycled from full open to full closed and back to full open for verification of limit and torque switch function and setting, and ability of motor operator to open and close valve after seat leakage test has been performed.

B. Inspection: Owner or Owner's representative shall have right to inspect at any stage of fabrication equipment, materials, and associated QA/QC documentation covered by this Specification including Suborder(s).

C. Inspection and Test Plan (ITP): Manufacturer shall provide an Inspection and Test Plan (ITP) that identifies the inspections and tests to be performed during manufacture. Based on this ITP the Owner or his representatives may elect to witness shop testing. Notify Owner 3 weeks (or as otherwise specified) prior to testing.

2.14 SPARE PARTS AND SPECIAL TOOLS

A. Spare parts and special tools required for 1 year of operation shall be provided per manufacturer's recommendations. Contractor shall submit list of these spare parts and special tools.

B. Spare parts and special tools for construction, commissioning and startup shall be included. Any such parts used during construction or startup shall be replaced.

C. Spare parts and special tools are to be packaged separately from the equipment and shipped along with the equipment. A tag shall be attached to each part showing equipment tag number, part name or description and drawing reference and part item number.

D. All spare parts and special tools shall be supplied new and unused.

E. Contractor shall submit a list of recommended spare parts for long-term, reliable operation including pricing. Pricing shall be valid until Project closeout and acceptance.

PART 3 EXECUTION

3.01 SUPPLEMENTS

A. The supplements listed below, following "End of Section," are part of this Specification.

1. AC Induction Motor Datasheet for Motor Operated Valves:
    a. Refer to Section 26 26 13, Low Voltage AC Induction Motors Data Sheets for a blank motor datasheet.
    b. A completed one motor datasheet shall be supplied for each motor operated valve.
    c. Control Valve Datasheets.

END OF SECTION

INTENTIONALLY LEFT BLANK

GENERAL	1	Tag Number	P&ID No.			WPCAUX-0-FO-FV-037A	P-550				
	2	P&ID Description	Ref Old No.			WPCAUX-0					
	3	Service				AUX AREA FUEL OIL SUPPLY IN-LINE SOLENOID VALVE					
	4	Line Number	Line Specification			WPCAUX-0-FO-3"-0004-HC01-N					
	5	Line Size	Line Schedule			3"					
	6	Line I.D.	Line Material			WPCAUX-0-FO-3"-0004-HC01-N					
	7	Area Classification									
	8										
PROCESS CONDITIONS	9	Fluid	Fluid State			No. 2 Fuel Oil					
	10	Pressure	Min	Norm	Max	psig		15	30	45	
	11	Temperature	Min	Norm	Max	deg F		20	60	140	
	12	Flow	Min	Norm	Max	gpm		25	106	106	
	13	Allowable Diff. Press.		Min	Max						
	14	Specific Gravity				0.83					
	15	Operating Viscocity				2.3 cSt at 104F					
	16	Valve Pressure Drop Coefficient Kv									
	17	Valve Cv/Cg									
	18	Failure Position									
VALVE BODY	19	Type	Number of ports								
	20	Size: Body	Valve Port			3"					
	21	Connection: Size	Type			3" 150LB FLANGE					
	22	Connection Rating									
	23	Body Material				304 SS					
	24	Seat Sealing Material				FKM					
	25	Packless or Type Packed									
	26	Manual Reset									
	27	Manual Operator				YES					
	28										
	29										
WHEN ENERGIZED	30	2-Way Valve									
	31	3-Way Valve									
	32	Vent Port									
	33	Pressure Port									
	34	Pressure To									
	35	Exhaust to									
	36										
	37										
SOLENOID	38	Enclosure Rating	Enclosure Material			NEMA 7	SS				
	39	Voltage Required	Frequency Required			24Vdc					
	40	Coil Type				Continuous Duty					
	41	Coil Single Or Double	Coil Rating				Class H				
	42	Communication Type									
	43	Electrical Connection									
OPTIONS	44	Visual Indicator									
	45	Manual Operator									
PURCHASE	46	Vendor									
	47	Manufacturer				MORBROS					
	48	Model Number				710FSS					
	49										
	50	Serial Number									
	51										
NOTES	1										
	2										
	3										
	4										
	5										

No.	By	Chk	Appr	Date	Revision
A	JH	CZ		12/4/2025	FOR REVIEW

Solenoid Valve (in-line)
Form No.
Form Effective:
Sheet of
Project No: D3483600
Dwg. No.: TBD
Rev.:

GENERAL	1	Tag Number	P&ID No.			WPCAUX-0-FO-FV-041 P-550				
	2	P&ID Description	Ref Old No.			WPCAUX-0				
	3	Service				FUEL OIL RETURN PUMP SUCTION LINE SOLENOID VALVE				
	4	Line Number	Line Specification			WPCAUX-0-FO-3"-0016-HC01-N				
	5	Line Size	Line Schedule			3"				
	6	Line I.D.	Line Material			WPCAUX-0-FO-3"-0016-HC01-N				
	7	Area Classification								
	8									
PROCESS CONDITIONS	9	Fluid	Fluid State			No. 2 Fuel Oil				
	10	Pressure	Min	Norm	Max	psig	15	30	45	
	11	Temperature	Min	Norm	Max	deg F	20	60	140	
	12	Flow	Min	Norm	Max	gpm	25	106	106	
	13	Allowable Diff. Press.		Min	Max					
	14	Specific Gravity				0.83				
	15	Operating Viscocity				2.3 cSt at 104F				
	16	Valve Pressure Drop Coefficient Kv								
	17	Valve Cv/Cg								
	18	Failure Position								
VALVE BODY	19	Type	Number of ports							
	20	Size: Body	Valve Port			3"				
	21	Connection: Size	Type			3" 150LB FLANGE				
	22	Connection Rating								
	23	Body Material				304 SS				
	24	Seat Sealing Material				FKM				
	25	Packless or Type Packed								
	26	Manual Reset								
	27	Manual Operator				YES				
	28									
	29									
WHEN ENERGIZED	30	2-Way Valve								
	31	3-Way Valve								
	32	Vent Port								
	33	Pressure Port								
	34	Pressure To								
	35	Exhaust to								
	36									
	37									
SOLENOID	38	Enclosure Rating	Enclosure Material			Explosion proof Class 1 Div 2	SS			
	39	Voltage Required	Frequency Required			24Vdc				
	40	Coil Type				Continuous Duty				
	41	Coil Single Or Double	Coil Rating			Class H				
	42	Communication Type								
	43	Electrical Connection								
OPTIONS	44	Visual Indicator								
	45	Manual Operator								
PURCHASE	46	Vendor								
	47	Manufacturer				MORBROS				
	48	Model Number				710FSS				
	49									
	50	Serial Number								
	51									
NOTES	1									
	2									
	3									
	4									
	5									

No.	By	Chk	Appr	Date	Revision
A	JH	CZ		12/5/2025	FOR REVIEW

Solenoid Valve (in-line)	
Form No.	
Form Effective:	
Sheet	of
Project No:	D3483600
Dwg. No.:	TBD
Rev.:	

SECTION 40 94 23
PSS BALANCE OF PLANT CONTROL SYSTEM

PART 1 GENERAL

1.01 SUMMARY

A. This Document specifies the requirements of the Process SCADA System (PSS) Balance of Plant Control System (BCS). The scope includes furnishing all engineering, design, labor, materials, equipment, programming, testing services, construction services, and other control systems required to validate interconnection in the PSS supplied by 1420 and interface with the fuel oil forwarding pump PLC identified in 23.13.13.33 Fuel Oil Forwarding Pump Skid to provide a fully functional system.

B. The scope includes:

1. The Allen Bradley ControlLogix PLC for control of the balance of plant equipment was supplied by Contract 1420. The scope of project 1444 includes adding/updating the programming and validating the I/O function of the fuel oil return pumps, the new FV 037A and FV 041 solenoid valves, and adding the communication link to the fuel oil forwarding pump skid. It also includes monitoring of the leak detection on the fuel oil line to the fuel oil forwarding pumps.
2. All input/output points included in the Specification, the aggregation of all Specification sections, including those points that may not be shown on the Drawings but required per Specification section. This requirement is included with emphasis to highlight that not all input/output points are explicitly shown on the Drawings and review of all Specification sections for input/output requirements is the responsibility of the Contractor and exclusion of input/output points from the Drawings is not a basis for change.
3. Sequence of Operation requirements are shown in the Mechanical Process Drawings P080.
4. All required network switches that shall enable independent communication between PSS components utilizing Modbus TCP/IP communications protocol and managed interfaces with non-PSS system elements. Network switches shall be managed and block-by-default (Reference the drawings for Contractor supplied vs Owner supplied). Any configuration shall be in compliance with SWBNO standards. Cisco switches shall be supplied by Contractor but configured by Owner.

5. All master, non-equipment specific, PSS hardware required to interface with equipment specific hardware and able to perform autonomously if the supervisory network communication is interrupted. Such PSS hardware includes, but is not limited to, PLC's, serial port expanders, protocol converters, etcetera, as required to provide a totally functional PSS.
6. All support equipment required to complete the totally functional PSS.

C. The Contractor is responsible for configuration, software licensing, application programming, testing, and system training to deliver a completely integrated PSS BCS safely, reliably, and efficiently monitoring and controlling all devices connected to the PSS.

D. The PSS BCS shall comply with the requirements of Section 25 05 11, Cybersecurity for Facility Related Control Systems to ensure system resilience against cyber threats.

E. This Specification section does not stand alone and shall be read with Section 40 94 24, PSS Human Machine Interface (HMI) which specifies the human-machine interface. Comprehensive coordination is required between the PSS BCS specified herein and the PSS HMI System specified in Section 40 94 24, PSS Human Machine Interface (HMI), as well as other control system interfaces specified in Section 40 94 25, PSS Data Exchange Interface (DEI) which specifies the data exchange interface requirements to enable monitoring and control of the overarching equipment and systems under the PSS's control to implement all specified control and data exchanges between these pieces of equipment, workstations, and control system servers to deliver a completely integrated PSS as shown and specified in the Documents. 23.13.13.33 Fuel Oil Forwarding Pump Skid and 23.12.13 Fuel Oil Transfer Equipment contain the fuel oil mechanical equipment information.

F. The BCS PSS is a subsystem of the overall SWBNO PSS, which interconnects with plantwide HMI systems and other interconnected control systems.

1.02 REFERENCES

A. The latest edition for all codes and standards referenced in this Specification shall be the edition in effect at the time of Contract Award.

B. Industry Standards:

1. International Electrotechnical Commission (IEC):
   a. 15802, Information Technology – Telecommunications and Information Exchange Between Systems – Common Specifications – Medium Access Control (MAC) Service Definition.

b. 60529, Enclosure Protection from Environment.
c. 60834, Performance and Testing of Teleprotection Equipment of Power Systems.
d. 60870, Telecontrol Equipment and Systems Series.
e. 61000-4-11, Electromagnetic Compatibility.
f. 61131, Programmable Controllers.
g. 61850, Interoperability for Advance Protection and Control Applications.
h. 52439, Industrial Communications Networks.
i. 62443, Industrial Network and System Security Series.
j. 62351, Power Systems management and Associated Information Exchange – Data and Communications Security.

2. Institute of Electrical and Electronics Engineers (IEEE):
   a. 802.1, Local and Metropolitan Area Networks - Port Based Network Access Control.
   b. 1050, Generating Station I&C Equipment Grounding.
   c. 1588, A Precision Clock Synchronization Protocol for Networked Measurement and Control Systems
   d. 1613, Environmental and Testing Requirements for Communications Networking Devices Installed in Electric Power Substations.
   e. IEEE 1686, Substation Intelligent Electronic Devices (IEDs) Cyber Security Capabilities.
   f. 1815, electric Power Systems Communications – Distributed Network Protocol (DNP3).
   g. C37.21, Standard for Control Switchboards.
   h. C37.90.1, Electrical Surge Withstand Capability.
   i. C37.90.2, Radio Frequency Interference.
3. International Society of Automation (ISA):
   a. 71, Environmental Conditions for Process Measurement and Control Systems.
   b. 77.42.01 (R 2011), Fossil Fuel Power Plant Feedwater Control System - Drum Type.
   c. ANSI/ISA 12.12.01-2000, Hazardous Location Certification.
4. National Electrical Manufacturers Association (NEMA): NEMA 250, Enclosures for Electrical Equipment.
5. National Fire Prevention Association (NFPA): NFPA 70, National Electrical Code (NEC).
6. National Fire Prevention Association (NFPA): NFPA 85, Boiler and Combustion Systems Hazards Code.
7. National Institute of Standards and Technology (NIST):
   a. 800-30, Information Security Guide for Conducting Risk Assessments.
   b. 800-37, Risk Management Framework for Information Systems and Organizations.
   c. 800-53, Security and Privacy Controls for Federal Information Systems and Organizations.
   d. 800-82, Guide to Industrial Control Systems (ICS) Security.

8. UL:
    a. 508, Safety Standard for Industrial Control Equipment.
    b. 840, Electrical Equipment Insulation Coordination.
    c. 1449, Standard for Surge Protective Devices.
    d. 1604, UL Certification for Existing Products.
    e. 1778, Standard for Uninterruptible Power Supply Equipment.

C. Related Sections:

1. Section 01 33 00, Submittal Procedures.
2. Section 01 58 53, Project Equipment Identification.
3. Section 01 61 00, Common Product Requirements.
4. Section 26 00 00, Electrical General Requirements.
5. Section 26 00 10, Electrical Summary of Work.
6. Section 26 05 04, Electrical Requirements for Packaged Mechanical Equipment.
7. Section 40 90 10, Instrumentation and Control Summary of Work.
8. Section 40 94 24, PSS Human Machine Interface.
9. Section 40 94 25, PSS Data Exchange Interface.
10. Section 01 88 15, Anchorage and Bracing and Section 01 45 36, Equipment Seismic Certification. These two Specifications are highest in priority in case of any conflicting requirements.

D. The Contractor has the ultimate responsibility for the complete identification and execution of all applicable codes, standards, and regulations.

E. Unless otherwise stated, these codes, standards or material specifications shall be the latest revisions, including all effective publications, attachments, addenda and editions in effect at the issuance date of this document.

F. These codes and standards set forth the minimum requirements. These may be exceeded by the Contractor if, in its judgment and with Owner's acceptance, superior or more economical designs or materials are available.

G. The most severe requirements shall prevail in the event of conflict between requirements, specifications and applicable and governing codes. All conflicts among the Codes, specifications and/or purchase order shall be brought to the Owner's attention for written resolution prior to release for fabrication.

H. Violations resulting from stipulations in the existing codes shall be corrected by the Contractor at its own expense.

I. The Contractor shall be responsible for obtaining copies and paying all costs of all applicable codes and regulations.

1.03 DEFINITIONS

A. BOP - Balance of Plant.

B. BCS - Balance of Plant Control System.

C. FAT - Factory Acceptance Test.

D. HMI - human-machine interface; a computer-based operator interface for a control system.

E. PSS - Process SCADA System.

F. PLC - Programmable Logic Controller.

G. SCADA - Supervisory Control and Data Acquisition.

H. SAT - Site Acceptance Test.

1.04 SUBMITTALS

A. Documentation shall be provided in accordance with the Submittal Register and Section 01 33 00, Submittal Procedures.

B. Contractor shall provide the following information:

1. Drawing list and submittal schedule.
2. A layout drawing of the proposed system(s) showing all modules used within the system.
3. Overall system architecture and communications diagram.
4. A physical drawing stating all dimensions of the system enclosures as well as a detailed bill of materials for each enclosure.
5. All standard product literature pertinent to the proposed system.
6. Utilities List (power, instrument air, etc.).
7. Enclosure power, grounding, wiring termination and layout drawings.
8. System hardware chassis or rack layout drawings.
9. Enclosure detail drawings, including external connection drawings.
10. Bill of materials, which shall use actual manufacturer names and part numbers.
11. Manufacturer’s product data sheets annotated for specific application for each component.
12. Input/Output (I/O) points list for all I/O required for a fully functional interface. The I/O list shall contain all information required to complete the database. A copy of the database in Microsoft Excel or Access shall be provided to the Owner/Engineer, as well as the final controller program native file.

13. For each Enclosure tabulate and summarize:
    a. Required voltages, currents, and phases(s).
    b. Maximum permitted safe operating temperature of each component.
    c. Calculations: Maximum heat dissipations in Btu per hour.
    d. Steady State Temperature Calculations: Provide heat load calculations showing the panel estimated internal steady state temperature in the applicable service conditions.
14. Installation Drawings, instructions, product bulletins and manuals.
15. Operation and maintenance manuals for all hardware and software.
16. Controller logic programming documentation, including software backup and recovery plans.
17. IDE Software and licensing.
18. HMI screen graphic and faceplate captures.
19. Preliminary and final Data Exchange Tables listing all READ and WRITE BITS and WORDS with their control system addresses involved in data exchange with controlled BCS PSS hardware.
20. Test plans/procedures and reports (step-by-step instructions) for Factory and Site Acceptance Tests.
21. List of recommended spare parts.

C. The Contractor shall provide Controller logic and screenshots of all HMI screens at 75 percent completion for Owner review and comment.

D. Contractor shall provide one final hard copy and one electronic copy of all configuration files after the Factory Acceptance Test (FAT).

E. Contractor shall provide input/output (I/O) database configuration for all I/O. The database shall include all system diagnostic and communication I/O, as well as set points for all alarms and analog logic. The Contractor shall be responsible for all information required to complete the database. A copy of the database in Microsoft Excel or Access shall be provided to the Owner, as well as the final controller program in native format with complete documentation and the final data exchange tables for communications with all BCS PSS controlled hardware.

1.05 QUALITY ASSURANCE

A. The Contractor shall maintain a quality manual/system which meets the requirements of the applicable international quality system standard appropriate to the contracted Scope of Work throughout the duration of this Purchase Order as well as ISO 9000 requirements.

B. The Contractor quality plan shall be issued for review and for monitoring during the Project. Reporting requirements shall include the Owner requirements and additional requirements as stated below.

C. The Contractor shall be responsible to ensure that the Contractors and SubContractors meet the intent of the requirements of this Specification and are able to demonstrate their compliance.

D. Requirements covered by this Purchase Order/Specification shall apply to lower tier Sub-Contractors, including Owner's access (accompanied by Contractor) to facilities and records.

E. All materials and hardware to be furnished and all Work to be performed under this Specification shall be subject to review, inspection, and testing as described below.

1.06 WARRANTY AND GUARANTEES

A. The Contractor shall provide copies of Manufacturer's warranties and the Contractor's extended guarantee or warranty with Owner named as beneficiary in writing as special guarantee.

B. The Contractor shall warrant that the equipment shall be supplied in accordance with these Specifications and shall perform as described herein.

C. The Contractor shall warrant that the equipment provided shall be free from defects in materials and workmanship for a period of 12 months after acceptance by Owner.

D. The Contractor (or equipment Manufacturer under the supervision of the Contractor) shall repair or provide a replacement for any defective component under the warranty provided that any such defect was not the result of misuse of the equipment by the Owner or the Owner's representative. The Manufacturer shall be able to provide Owner with training and support service during the first year of operation.

PART 2 PRODUCTS

2.01 BALANCE OF PLANT CONTROL SYSTEM GENERAL DESIGN

A. The BCS PSS shall consist of multiple logical remote terminal units (RTUs), phoenix terminal blocks, controller modules, power supplies, I/O modules, communication modules, Remote I/O modules and chassis or rack, and all required accessories per this Specification to provide a fully functional system.

B. System electronics shall be shielded against electromagnetic interferences and shall be capable of withstanding surges in power supplies.

C. All BCS hardware shall be designed with a temperature margin allowance for heat buildup inside the enclosure in which the hardware is mounted.

D. Enclosures for outdoor usage shall be designed to prevent against freezing, wind, rain, saline's, fume, and dust. Other requirements include:

1. Environment: Inside, Air-conditioned.
2. Fabrication: NEMA 12.
3. Size to adequately dissipate heat from equipment mounted inside panel and on panel.
4. Ventilated Panels: Furnish with louvers and forced ventilation as required to prevent temperature buildup from equipment mounted inside panel and on panel.
5. Ventilation Fans: Furnish where required to provide adequate cooling.
6. Refrigerated Systems: Furnish where heat dissipation cannot be adequately accomplished with natural convection or forced ventilation.
7. Space Heater: Thermostatically controlled to maintain internal panel temperatures above dewpoint.

E. BCS PSS hardware shall be designed to operate on 120V ac, 60-Hz, single-phase power or 125V dc power.

F. All communication hardware, software, programming to establish communication interfaces shown on the Data Sheets and Drawings.

G. All fiber optic cable, media converters, patch panels, patch cords, power supplies to support the communication.

H. Configuration of the system based on datalink list developed in the format defined herein and as necessary to provide a fully functional interface to perform the intended purpose. Configuration shall include controller configuration, datalink configuration, communication equipment configuration, and all other system configuration required to provide operational interface communication links.

I. During execution of the Contract, Owner and Engineer shall select the points required for interface communication based on the Data Sheets and Drawings. Contractor shall be responsible for obtaining the detailed data from the interfaced equipment necessary to perform the interface configuration. An allowance for programming and configuration of an additional 100 points or 35 percent of designed point quantity, whichever is less, during actual commissioning.

J. Contractor shall obtain services from hardware Systems Integrators with a minimum demonstrated experience of 10 years in projects of similar size and complexity including a minimum of 100,000 points and ten projects worth of experience. Systems Integrator to provide field support to establish interface communication links.

K. All data files and software tools used for setup and programming shall be provided to Owner. Software licenses shall be provided by Contractor to support initial configuration and site commissioning.

L. Integrating, commissioning, and startup of interface equipment, data links, and all related accessories and equipment shall be provided to Owner.

2.02 INTENDED USE OF THE SPECIFIED EQUIPMENT

A. The BCS PSS functionality is providing direct control electrical distribution equipment for reliable resilient fault tolerant operation of the electrical distribution system as shown on the Drawings.

2.03 CHASSIS/RACK

A. Every controller chassis or rack shall have a power supply.

B. Each I/O chassis or rack shall include a power supply, communication module for link to associated controllers, and all required I/O modules. Each I/O chassis or rack shall include 20 percent spare space, a minimum of two positions, for future use. If one chassis or rack is not sufficient for these requirements, a second and subsequent chassis or rack shall be provided as needed.

C. Further chassis or racks shall be provided to accommodate all the required I/O and communications modules with 20 percent spare space, a minimum of two positions, for future use. If one chassis or rack is not sufficient for these requirements, a second and subsequent chassis or rack shall be provided as needed.

D. The Contractor shall consider Contractor spacing, heat, and grounding requirements when mounting the chassis or rack in the enclosure.

E. The chassis or rack shall be mounted a minimum of 6 inches away from the top and bottom of the enclosure, and a minimum of 5 inches from either side. If the enclosure is a free-standing cabinet with bottom flush with the floor, the chassis or rack shall be mounted a minimum of 12 inches from the bottom of the enclosure to provide cable entry/spreading space.

F. The Contractor shall connect an equipment grounding conductor from each chassis or rack directly to an individual bolt on the enclosure ground bus.

G. Delegated Foundation Anchorage Design:

1. Design foundation anchorage for cabinet and all associated equipment. Anchorage design shall be in accordance with all applicable codes and standards as listed on the Project Drawings.
2. Loading criteria shall include all applicable gravity, lateral, seismic and equipment operating loads. Delegated engineer shall coordinate as required with equipment manufacturer to determine applicable loading.
3. Anchorage layout and design shall be based on final approved equipment Shop Drawings and shall consider foundation size, thickness and edge distances as shown on the Project Drawings.
4. Submit design calculations and Drawings for anchorage signed and sealed by a professional engineer registered in Louisiana for review and approval prior to installation.

5. Submit Drawings for review and approval prior to installation. Drawings shall show all information required to complete installation of equipment anchorage, including but not limited to anchor rod diameter, material, embedment depth, and layout.
6. Related Requirements Section 01 88 15, Anchorage and Bracing and Section 01 45 36, Equipment Seismic Certification. These two specifications are highest in priority in case of any conflicting requirements.

2.04 POWER SUPPLIES

A. Power supplies shall be provided for:

1. Chassis or rack power supplies.
2. 24V dc loop supplies for I/O terminal blocks (refer to Paragraph Chassis/Rack for details).

B. The Contractor shall provide a 120V ac power supply for each I/O chassis or rack.

C. The Contractor shall consider future system expansion when sizing the power supplies. Excessive loading of the power supplies shall also be considered to avoid shutdowns or premature failures.

D. Power for hardware shall be fed separately from power for non-critical items such as convenience receptacles and lights.

E. Each power supply shall have its own incoming power feed and circuit breaker.

F. Each power supply shall have a hardwired failure alarm (built into the power supply, if available, or by powering the coil of a relay from the power supply if not) as an input to the control system.

2.05 CONTROLLERS

A. PLC’s may be redundant Allen Bradley Owner approved equal processors for the main BOP PLC. Non-critical systems may be Allen Bradley or Owner approved equal simplex processors. Equipment with highly standardized controllers such as instrument air compressors and CEMS may be manufacturer standard but Allen Bradley is preferred. Fuel oil pump skids and other custom designed equipment may use Allen-Bradleyor Owner approved equal.

B. A single CPU shall be provided per ‘logical’ node. The PLC shall manage sequential logic sequences as required for safe and functional operation of the Balance of Plant Control System. Primarily, this shall include the fuel oil system, sump pump operation, monitoring of the instrument air system,

CEMS and monitoring of Turbine 7 as well as the fuel oil pump forwarding station. Additionally, an interface to the PDCS shall be implemented for signal exchange and the Owners PI archiving system. Typically, all local pumps shall include a Hand/Off/Auto switch such that the operation of the systems shall not be dependent on the health of the PLC. It is understood that local in person operation would be required if the HOA is used for operation.

C. When selecting the controller, the Contractor shall consider the following:

1. Number of controller tasks.
2. Number of communications cards used.
3. Amount of controller memory needed.
4. Ability to support a system clock for sequence of operation time stamping and time synchronizing of PLC functions.
5. Ability to support a local HMI.

D. All controllers shall be provided with enough memory to accommodate the 20 percent spare system automation logic.

E. Control configuration shall be stored in on-board non-volatile memory. Alarm indication of low backup battery voltage shall be provided, unless flash memory is used, and no back-up battery is needed.

2.06 CONTROL SYSTEM DATALINKS

A. The PSS control system shall communicate with the following control systems:

1. Solar Titan 250 control system via Modbus TCP/IP.
2. Fuel oil forwarding pump control system via Modbus TCP/IP.
3. Instrument air system controls via Modbus TCP/IP.
4. nVent RAYCHEM TraceTek TTDM-128 leak detection module via RS485 Modbus.
5. Power Distribution Control System via Modbus TCP/IP.
6. Owners PI archiving system via OPC/UA.
7. Continuous Emissions Monitoring System (CEMS) via Modbus TCP/IP.

2.07 CONTROL PANEL ELECTRICAL

A. UL Listing Mark for Enclosures: Mark stating “Listed Enclosed Industrial Control Panel” per UL 508A.

B. I&C and electrical components, terminals, wires, and enclosures UL recognized or UL listed.

C. Wiring:

1. AC Circuits:

a. Type: 600-volt, Type MTW stranded copper.
b. Size: For current to be carried, but not less than 14 AWG.

2. Analog Signal Circuits:
   a. Type: 300-volt, Type 2 stranded copper, twisted shielded pairs.
   b. Size: 18 AWG, minimum.
3. Other DC Circuits.
   a. Type: 600-volt, Type MTW stranded copper.
   b. Size: 18 AWG, minimum.
4. Separate analog and other DC circuits at least 6 inches from any AC power and control wiring.
5. Enclose wiring in sheet metal raceways or plastic wiring ducts.
6. Wire Identification: Numbered and tagged at each termination.
   a. Wire Tags: Machine printed, heat shrink.
   b. Manufacturers:
      1) Brady PermaSleeve.
      2) Tyco Electronics.

D. Wiring Interface:

1. For analog and discrete signal, terminate at numbered terminal blocks.
2. For special signals, terminate power (240 volts or greater) at manufacturer's standard connectors.
3. For panel, terminate at equipment on/with which it is mounted.

E. Terminal Blocks:

1. Quantity:
   a. For external connections.
   b. Wire spare or unused panel mounted elements to their panels' terminal blocks.
   c. Spare Terminals: 20 percent of connected terminals, but not less than 10 percent.
2. General: Group to keep 120V ac circuits separate from 24V dc circuits.
   a. Connection Type: Screw connection clamp.
   b. Compression Clamp:
      1) Hardened steel clamp with transversal grooves penetrating wire strands providing a vibration-proof connection.
      2) Guides strands of wire into terminal.
   c. Screws: Hardened steel, captive, and self-locking.
   d. Current Bar: Copper or treated brass.
   e. Insulation:
      1) Thermoplastic rated for minus 55 to plus 110 degrees C.
      2) Two funnel shaped inputs to facilitate wire entry.
   f. Mounting:
      1) Rail.
      2) Terminal block can be extracted from an assembly without displacing adjacent blocks.
      3) End Stops: One at each end of rail, minimum.

g. Wire Preparation: Stripping only.
h. Jumpers: Allow jumper installation without loss of space on terminal or rail.
i. Marking System:
    1) Terminal number shown on both sides of terminal block.
    2) Allow use of preprinted and field marked tags.
    3) Terminal strip numbers shown on end stops.
    4) Mark terminal block and terminal strip numbers as shown.

F. Terminal blocks shall be Phoenix Contact or Owner approved equal. Owner preferred part numbers are shown below:

1. 2.5 feed through - https://www.phoenixcontact.com/en-us/products/feed-through-terminal-block-pt-25-3209510.
2. 2.5 end cover - https://www.phoenixcontact.com/en-us/products/end-cover-d-st-25-3030417.
3. 2.5 twin feed through - https://www.phoenixcontact.com/en-us/products/multi-conductor-terminal-block-pt-25-twin-3209549.
4. 2.5 twin end cover - https://www.phoenixcontact.com/en-us/products/end-cover-d-st-25-twin-3030488.
5. 2.5 knife disconnect - https://www.phoenixcontact.com/en-us/products/disconnect-terminal-block-pt-25-mt-3210156.
6. 2.5 knife cover - https://www.phoenixcontact.com/en-us/products/end-cover-d-pt-25-mt-3211003.
7. 2.5 Plug in bridge - https://www.phoenixcontact.com/en-us/products/jumper-fbs-50-5-3038930.
8. 24V fusable - https://www.phoenixcontact.com/en-us/products/fuse-terminal-block-pt-4-hesiled-24-5x20-3211903.
9. 250V ac fusable - https://www.phoenixcontact.com/en-us/products/fuse-terminal-block-pt-4-hesila-250-5x20-3211907.
10. end cover - https://www.phoenixcontact.com/en-us/products/end-cover-d-st-4-3030420.
11. plug in bridge - https://www.phoenixcontact.com/en-us/products/jumper-fbs-20-6-3030365.
12. End clamp - https://www.phoenixcontact.com/en-us/products/end-block-clipfix-35-5-3022276.

G. Surge Suppression:

1. General: Provide surge suppressors as specified below. Any field device wiring from the PLC that leaves a building that is not under a lightning protection zone requires surge suppression. Any copper network cables that leave a building require surge suppression.
    a. Surge Suppressor, on 120-volt AC power supply within panel: Phoenix Contact MAINS-Plugtrab or approved equal.
    b. Surge suppressor, Analog I/O within Panels: Phoenix Contact Plugtrab 2X2, Emerson EDCO DRS-036.

c. Surge suppressor, 120V ac Digital I/O within Panels: Phoenix Contact Plugtrab PT 2X1VA-120AC-ST with base element PT-BE/FM.
d. Surge Suppressor, Category 6+, Ethernet: Phoenix DT LAN CAT.6+ Part 2881007.

H. Grounding: Internal copper grounding bus for ground connections on panels, consoles, racks, and cabinets.

I. Relays:

1. General:
   a. Relay Mounting: Plug-in type socket.
   b. Relay Enclosure: Provide dust cover.
   c. Socket Type: Screw terminal interface with wiring.
   d. Socket Mounting: Rail.
   e. Furnish holddown clips.
2. Control Circuit Switching Relay, Nonlatching:
   a. Type: Compact general purpose plug-in.
   b. Contact Arrangement: 3 Form C contacts.
   c. Contact Rating: 10A at 28V dc or 240V ac.
   d. Contact Material: Silver cadmium oxide alloy.
   e. Coil Voltage: As noted or shown.
   f. Coil Power: 1.8 watts (dc), 2.7VA (ac).
   g. Expected Mechanical Life: 10,000,000 operations.
   h. Expected Electrical Life at Rated Load: 100,000 operations.
   i. Indication Type: Neon or LED indicator lamp.
   j. Push-to-test button.
   k. Manufacturer and Product: Potter and Brumfield; Series KUP.
3. Control Circuit Switching Relay, Latching:
   a. Type: Dual coil mechanical latching relay.
   b. Contact Arrangement: 2 Form C contacts.
   c. Contact Rating: 10A at 28V dc or 120V ac.
   d. Contact Material: Silver cadmium oxide alloy.
   e. Coil Voltage: As noted or shown.
   f. Coil Power: 2.7 watts (DC), 5.3VA (ac).
   g. Expected Mechanical Life: 500,000 operations.
   h. Expected Electrical Life at Rated Load: 50,000 operations.
   i. Manufacturer and Product: Potter and Brumfield; Series KB/KBP.
4. Control Circuit Switching Relay, Time Delay:
   a. Type: Adjustable time delay relay.
   b. Contact Arrangement: 2 Form C contacts.
   c. Contact Rating: 10A at 240V ac.
   d. Contact Material: Silver cadmium oxide alloy.
   e. Coil Voltage: As specified or shown.
   f. Operating Temperature: Minus 10 to 55 degrees C.
   g. Repeatability: Plus or minus 2 percent.

h. Delay Time Range: Select range such that time delay set point fall between 20 to 80 percent or range.
i. Time Delay Set Point: As specified or shown.
j. Mode of Operation: As specified or shown.
k. Adjustment Type: Integral potentiometer with knob external to dust cover.
l. Manufacturer and Products: Potter and Brumfield.
1) Series CB for 0.1-second to 100-minute delay time ranges.
2) Series CK for 0.1- to 120-second delay time ranges.

J. Intrinsic Safety Barriers:

1. Intrinsically Safe Relays: Monitor discrete signals that originate in hazardous area and are used in a safe area.
a. Manufacturer and Product: MTL, Inc.; Series MTL 5000.

K. Programmable Controllers: As specified in individual equipment sections and Section 40 91 00, Instrumentation and Control Components.

2.08 HARDWARE DOCUMENTATION

A. Provide the following for all elements of the PLC:

1. Block Diagram: A diagram showing all major system components. Identify components by manufacturer and model number. Show interconnecting cables diagrammatically.
2. Bill-of-Materials: A list of all PLC components. Group components by type and include:
a. Component manufacturer, model number and part number.
b. Component description.
c. Quantity supplied.
d. Reference to component catalog information.
3. Descriptive Information: Catalog information, descriptive literature, performance specifications, internal wiring diagrams, power and grounding requirements, power consumption, and heat dissipation of all elements of the PLC system. Clearly mark all options and features proposed for this Project.
4. Interconnecting Wiring Diagrams: Diagrams shall show all PLC elements, their interconnecting cables and wiring terminations, and all terminations to all interacting elements and subsystems. Terminations shall be numbered. Terminations for circuits extending outside PLC assemblies and/or leaving panels shall be labeled with circuit names corresponding to the Circuit and Raceway Schedule. The external circuit portion of this diagram shall be coordinated with the Electrical Subcontractor and shall bear his mark showing that this work has been done.
5. Outline Drawings: Equipment envelope drawings showing: External dimensions, enclosure materials, conduit connections and installation requirements.

6. Installation Details: Any modifications or further details as may be required to supplement the Contact Documents and adequately define the installation of the PLC elements.
7. Input/Output List: For each I/O point, list point type, tag number of the source or final control element, equipment description, PLC number, PLC terminal identification, rack number, module slot number and PLC network address.
8. Provide documentation on the type of Operator Interface being used.

2.09 INSTRUMENT TAG NUMBERS

A. Tag numbers shall match those shown on P&IDs.

2.10 INPUT/OUTPUT MODULES

A. I/O Modules permitted for use in the system shall be from the same family of hardware used on the application. All I/O provided by the Contractor shall be card based. When selecting I/O modules the Contractor shall take into account the location of the monitored point and the number of points to be monitored.

B. Each I/O module shall be terminated with phoenix terminal blocks. For wiring 14 AWG or larger.

C. In addition to application requirements, the system shall be provided with 20 percent spare I/O, all functional and terminated to phoenix terminal blocks. Additionally, in the case of spare digital outputs, spare auxiliary relays shall be provided and wired. Spare I/O points are for Owner's future use.

D. The system shall be provided with 20 percent spare I/O positions, a minimum of two positions per I/O rack or chassis, for Owner's future use. All installed spare I/O shall be tested.

E. Both digital and analog I/O (except thermocouples) shall be Contractor-wired to Phoenix terminal blocks.

F. Analog and digital I/O shall accept field or system power as required by equipment design.

G. Digital input polling (wetting) voltage shall be 125V dc or 24V dc as shown on the Drawings. Analog loop voltages shall be 24V dc nominal, or otherwise, as shown on the Drawings.

H. Digital output voltage shall be 125V dc or 24V dc as shown on the Drawings. Each digital output channel, including spares, shall be wired to a Phoenix terminal block, then to an auxiliary/interposing relay for final connection to field devices. Auxiliary relay contacts shall be 2-Form C (DPDT), dry, and rated at 10.0 amperes resistive, 3.0 amperes inductive at 120V ac and 30V dc. Auxiliary relays shall be plug-in type with DIN rail-mounted socket.

I. The following I/O types shall be individually fused:

1. Analog input (4-20 ma).
2. Digital input.
3. Digital output.

J. All analog I/O shall be provided with appropriately rated surge suppressors.

2.11 COMMUNICATIONS

A. All interface data communication shall be managed by the common PSS communications scheme.

B. Modbus TCP/IP (speed, dependability, reliability, and performance) for LAN:

1. Signal exchange success greater than 99.99 percent of time.
2. Signal transfer between devices is less than 3 ms.
3. Ethernet transit via LAN is less than 1ms.
4. LAN outages shall be momentary, less than 16 ms, during signal exchange to maintain protection and automation.
5. Device ethernet failover shall occur within one processing cycle.

C. All interface system communications shall be evaluated against the Risk Management Framework (RMF) and be considered Operational Technology (OT) category RMF Level 1 or 2.

1. Data flow diagram shall be developed by the Contractor to facilitate data flow understanding and evaluation against RMF. Data flow diagram shall include data path communication protocol(s) and performance criteria.
2. Data path communication protocol(s) shall be evaluated, among a range of criteria, for performance, security, reliability, resilience, versatility, and applicability. There are various data communication protocols that have differing strength and weaknesses that are intended to be vetted via this process.

D. Where technologically feasible interface system communications links shall be deterministic and utilize cybersecure methods to ensure system resilience against cyber threats.

E. Any taps, terminators, patch cords, patch panels, fiber optic cable, media converters, software licensing, configuration and diagnostic software,

repeaters, or adapters required for communication design shall be provided by the Contractor.

F. Any Ethernet connections outside buildings or longer than 100 meters shall be via fiber optic cable. The Contractor shall provide all required fiber optic patch panel and patch cables as required with the equipment.

G. All dynamic data communications rates shall be sufficient to support safe reliable control and supervision holistically applied to both the interfaced equipment and the PSS.

H. Ethernet Communications, where not in conflict with other requirements herein, shall:

1. Interface between controllers shall be via non-redundant Ethernet/IP connection operating at 1000 Mbits per second.
2. Local and remote I/O interfaces shall be via non-redundant Ethernet/IP connection operating at 100 Mbits per second.
3. Interface to the HMI stations shall be via non-redundant Ethernet/IP connection operating at 100 Mbits per second.
4. Printer interfaces shall be non-redundant Ethernet/IP connection operating at 10/100 Mbits per second.
5. The Contractor shall provide a managed Ethernet switch in network rack enclosures as shown on the Drawings.
6. Any taps, terminators, media converters, configuration and diagnostic software, repeaters, or adapters required for equipment design shall be provided by the Contractor.
7. Any Ethernet connections outside buildings or longer than 100 meters shall be via fiber optic cable. The Contractor shall provide all required fiber optic converters with the equipment.

I. General Data Processing and Communication:

1. All dynamic data displays shall be updated often enough to permit safe control of the process.
2. The total execution time from operator initiation of any field output command, to the update of the resultant field status input shall be of short enough duration to sufficiently and safely control the process.
3. Analog and digital loops shall be capable of being processed at a tunable rate of four times per second (250 milliseconds processing time) or faster.

2.12 CONFIGURATION SOFTWARE

A. Contractor shall provide and configure the interface equipment with Original Equipment Manufacturer (Contractor) recommended software. Any other software specifically required for programming of interfaces shall be supplied by Contractor.

B. Software licensing shall be planned and structured such that the Owner shall not incur additional costs, beyond those of the Contract cost, necessary to operate and maintain the permanent installation after turnover from Contractor. All Project specific software licensing for the benefit of the Project shall be in the Owner's name and remanded to the Owner upon turnover of the Project.

2.13 CONFIGURATION REQUIREMENTS

A. The software shall be installed and configured by the Contractor. The configuration shall be completely annotated utilizing enhanced descriptors for all segments of each rung or logical element.

B. The hardware and configuration shall be simulated and debugged before shipment unless another method of testing is approved by the Owner. The debugging function shall include all interactions with the system HMI(s).

C. The software shall allow configuration to transfer, multiply, repeat, or report all inputs and outputs as required. All inputs and outputs shall be fully configured and programmed in the system. Spare installed I/O shall be identified as such within the program.

D. Control configuration shall be based on the Contractor's standard configuration and specific equipment requirements unless specified otherwise within the Drawings. The Owner may modify the control via the review process with no impact to cost.

E. Tags are to be global. Tags in the program are to be defined as controller tags and not program tags. This shall allow the use of global tags within the program.

F. Contractor database of all tags shall include an identifier of the controller and graphics associated with these points shall be provided to the Owner.

G. Contact Inputs:

1. The system shall scan contact inputs at the controller level for status change. Normal state for a contact shall be definable as either open or closed.
2. The system software shall have the ability to apply digital filtering or time delay to all contact inputs.

H. Accumulated Pulse Inputs: Scan or store pulse inputs such that the system resolves up to 60 pulses per second.

I. Contact Outputs: Shall be configured as necessary to meet the requirements of the Contractor's system and the Owner's external interfaces. All digital outputs shall be digital contact output modules with electrically isolated contacts, utilizing interposing relay assemblies where required for contact capacity.

J. Control Drive Outputs: Shall be configured as necessary to meet the hardware requirements of the Contractor's system and the Owner's external interfaces.

K. Totalized Pulse Outputs: Shall be configured as necessary to meet the requirements of the Contractor's system and the Owner's external interfaces.

L. Modulating Controls:

1. Maintain constant-loop gain or sensitivity for any modulating control loop containing multiple final control elements in service or able to respond to the automatic signal at any time.
2. Provide bumpless transfer from manual to automatic and from automatic to manual on all modulating loops without any intermediate manual balancing.
3. Response rate for each modulating loop shall be sufficient to prevent limiting response to sudden changes. Response shall be limited by the characteristics of the equipment under control and not the control system.
4. Provide for manual control of all final control elements from local operator interfaces by Contractor.
5. Transfer a control loop to manual and alarm if system determines a malfunction in the loop that would prevent proper automatic operation of the loop. Any signal, which transfers a loop to manual, shall be individually alarmed and individually presented through the operator faceplate.
6. All controllers shall track their own output when in manual or automatic control for bump less transfer. Master Controllers shall track the appropriate signal when their slave controllers have reached a high or low limit. In addition, Master controllers shall not be allowed in Automatic Mode if connected slave devices are in Manual Mode.
7. Provide drive failure alarms on all control outputs where position indication feedback is provided. The alarm shall be presented, and the control loop transferred to manual when the position feedback deviates from demand position by a pre-assigned high limit.
8. Provide programmable filtering in the configuration program for all analog input signals to minimize erratic control action.

M. Digital Controls:

1. Programming of all digital control loops shall be in ladder diagram format or a simplified high-level logic programming language.
2. All digital control loops shall be displayed on the local HMI workstation. The operator shall be able to issue commands to start/stop and open/close process equipment from loop displays (faceplates) on the local HMI. These commands shall be communicated to the appropriate controller through the communication network. The controller shall manipulate the appropriate I/O module to provide the required action.

N. Alarm Functions:

1. General:
   a. Alarm function shall be realized through the HMI graphic screen and audio alarm. Alarms shall be programmed with intelligence to avoid nuisance alarms and only annunciate when a true alarm condition occurs. Alarms shall be prioritized according to their importance and by the prioritization developed during Project implementation phase by the Project team. No local annunciators are required unless required for safety or are critical to monitoring the process. Hardwired alarm signals from device to control system or from control system hardware to control system hardware shall use a failsafe wiring scheme.
   b. The system shall compare all analog input points, composed points, etcetera, against high and/or low alarm limits. If an input is determined to be beyond either of these limits or if a contact input designated as an alarm is determined to be in alarm, the system shall provide audible and visual indication with descriptive details of the alarm state on the operator HMI.
   c. Once an analog point is in alarm, it shall re-alarm if its values continue to increase or decrease beyond the re-alarm limit. Alarm shall remain active until condition returns to normal operation.
2. Alarm sequence shall be as follows. Alarm visual presentation for each alarm sequence listed below shall be unique by color.
   a. Alarm Occurs: Audible alarm at contact closure is provided with a time tag and alarm message displayed on the HMI.
   b. Alarm Acknowledgement: HMI alarm displays visually changes and audible alarm is silenced.
   c. Return to Normal: Alarm display visually changes. Alarm display clears when the point has been acknowledged.

d. Re-alarms: Re-alarms are treated like new alarms. Original alarm shall stay visually active until normal operating condition is achieved. Priority or critical alarms (red) are okay to reactivate audible alarm no more than once per min. Contractor to also configure the ability to "shelve" any process related alarms (not system) to accommodate maintenance activity. Alarm shelving shall not exceed 24 hours.
e. One common alarm acknowledge scheme shall be used for all alarms on the HMIs so that only one action is required by the operator to easily acknowledge from the HMI.

2.14 PLC APPLICATION SOFTWARE DESIGN CRITERIA

A. PLC Program Design:

1. The programmable logic controller system (PLC) shall be used to provide facility automatic control, alarm management, and continuous process loop control. Specific PLC functional requirements are described in the loop specifications.
2. Programming shall be performed using the Studio 5000 Logix Designer for Allen-Bradley or Owner approved equal.
3. No control routines, control algorithms, or control logic shall be implemented in the HMI.
4. Break PLC applications software into:
   a. Sections:
      1) Contains all logic for a specific unit operation.
      2) Each section consists of a general logic subsections and, followed by unit operation subsections.
   b. Subsections: Contains logic for specific equipment such as a pump, valve or loop.
   c. Functional Blocks:
      1) Building block for pumps, valves, loop control, analog processing, alarm switches.
      2) Requirements for standard HMI/PLC function blocks to be provided are specified herein.
5. Program Documentation:
   a. Note and describe start of a new program section.
   b. Briefly describe control objectives.
   c. Identifies subsections.
   d. Subsection documentation includes brief description of control objective followed by a description and tag of the equipment being controlled.

B. PLC Program Documentation:

1. Ladder Diagram Description:
   a. Written overview description of each ladder logic program.
   b. Lead user through sections, subsections and function block of programs.
   c. Generally describe functions being implemented including software block used to implement functional requirements of this Specification.
2. Ladder Diagram Logic Listings:
   a. Include a description for each element (input, output, or special function block).
   b. Comments that describes function of ladder rungs.
   c. Complete ladder diagram logic listings.
   d. Provide following additional information integral to ladder listings to document PLC programs:
      1) I/O Point Cross Reference List: Each input and output, alphanumeric functional identification (up to 15 characters) printed above respective input or output in program listing. For each I/O point, the cross reference indicates each rung number where the point is used.
      2) Internal Coil Cross Reference List: For each coil a 15-character alphanumeric function identification printed above respective coil and all of its contacts in program listing. For each coil, cross reference indicates each rung number where respective coil or contact is used.
      3) Data Register Cross Reference List: For each registers locations in program where register is used.
      4) A listing of all programmed special functions, including memory locations used and location in program where special functions can be found. Function descriptions also to be shown in special function printout for all pertinent memory locations used in each special function. Programmed values of all memory also shown.
      5) Listing of all programmed PID loops by numbers. Function descriptions for all memory locations and status registers used and generated in the loop, as well as loop tuning values, shall also be shown in the PID loop printout. Programmed values of all pertinent memory locations used shall be shown.
      6) Timers, counters, integer add and subtract, move, master control relay, and jump functions shall show all memory locations used and their programmed values.

2.15 STANDARD PLC/HMI FUNCTIONS BLOCKS

A. General:

1. The following standard functions blocks specify the standard PLC/HMI functions block to be developed and used to implement the PLC/HMI requirements specified in the Loop Specifications.
2. Not all standard function blocks described below are used on this Project.
3. In case of any conflict and overlap with the Loop Specifications, contact the Engineer for clarification.

B. Discrete HMI/PLC Mode Command and Feed Back Status: When the HMI commands the PLC to specific mode such as Auto or Manual, the HMI shall be configured with an Auto write command database point and an "In Auto mode" database status.

C. Analog HMI/PLC Read-Write Process: When an analog value such as set point or controller output is specified to be accessible to the operator, the HMI shall be configured to write to the PLC register through one database tag and then read back the variable written to the PLC through a second database tag.

D. Discrete Equipment Control:

1. Controlled equipment to have ON-OFF-REMOTE (HOR) switch or a LOCAL/COMPUTER switch REMOTE/COMPUTER input to the PLC. The Controlled equipment shall include ON running status. PLC outputs include a RUN signal (or separate START and STOP signals) to start the equipment. The Applications Software shall prevent Start/Stop control of equipment by the PLC unless the HOR switch is in the REMOTE (COMPUTER) position.
2. When the controlled Equipment is in REMOTE or COMPUTER, the HMI and PLC shall be enabled to set the Equipment mode to HMI AUTO or HMI MANUAL. When the controlled Equipment is in HMI Manual, the HMI and PLC shall be configured to Start and Stop the Equipment from the HMI. When the Controlled Equipment is in HMI Auto, the automatic PLC routine shall control the ON/OFF status of the Equipment.
3. Monitor the ON status of equipment in the REMOTE or COMPUTER mode. If the PLC calls for the equipment to RUN and does not receive an ON signal after a suitable time delay, lock out the equipment in the PLC and generate an alarm to the HMI.
4. If the equipment is not in REMOTE or COMPUTER mode, the logic shall set the mode Manual.
5. Equipment Available Statues: Provide equipment available status that is logically true when equipment is in REMOTE, HMI AUTO and not FAILED.

6. If the PLC calls for the equipment not to RUN (STOP) and the ON signal is true after a suitable time delay, lock out the equipment in the PLC and generate equipment failure alarm to the HMI.
7. The equipment failure alarm condition and the equipment lock out shall be cleared by an HMI initiated Reset.
8. Provide a test input to be used for system testing. When the TEST input is true, the RUN (or START/STOP) output shall be prohibited from energizing. When in this mode, the ON status points read by the HMI and used by the PLC logic shall follow the command to run, instead of the field ON inputs.
9. Provide a bumpless transfer from LOCAL to REMOTE or COMPUTER mode. If the Pump is running in the LOCAL mode it shall continue running when transferred to REMOTE or COMPUTER.

E. Analog Inputs:

1. Provide sample times for analog inputs of no slower than one sample every 2 seconds. For inputs that are used for control purposes, use sample times no slower than once every 1 second.
2. Provide a first order digital filter on all analog inputs. Use the PLCs built-in lag filter and set the time constants to no greater than four times the input sample time.
3. All analog inputs shall be configured into a floating point variable and scaled in engineering units.
4. Provide analog switches on each analog input. Analog switches to provide High and Low alarms, or as shown or as described in the loop specifications. The set points for the analog switches shall be accessible and changeable through the HMI.
5. Monitor signal failure (out of normal range) on all analog inputs and alarm on the HMI.

F. Analog Switches:

1. All analog switches used for process alarms, to START and STOP pumps, sequences, etc. shall be configured through the HMI. Two types of analog switches shall be provided: one for rising signal and one for falling signal. Each analog switch shall be configured with a 1 percent dead band to prevent nuisance tripping. Provide operator access through the HMI to the analog switch set points.
2. Each analog alarm shall be configured with four inputs and one output.
   a. Inputs:
      1) Process variable scaled in engineering units.
      2) Set point.
      3) Minimum and Maximum engineering units.
   b. Outputs: Discrete output that switches when the process variable is above or below the set point.

G. Analog Control:

1. Unless otherwise noted, controllers shall be configured as Proportional-Integral (PI) type. Unless specifically noted, do not use derivative mode.
2. Provide access through the HMI for discrete mode changes, Set point and controller output when the controller is in manual.
3. Controller gain and integral time constant shall be adjusted via the HMI to provide stable operation and normal operating conditions.
4. Use the position from of the PI equation unless otherwise noted.
5. Freeze the controller bias to prevent reset wind up, if the output is out of range.
6. Controller sample times shall be no slower than once every 1 seconds.
7. Provide bumpless transfer between operating modes, Auto to Manual, and Manual to Auto.
8. Provide an HMI Controller tuning display for each loop. The tuning display shall have a trend that trends the Process Variable, Set point and Output.
9. Provide a set point initialization routine that initializes the set point to the value of process variable when the loop is set to Automatic.
10. Unless otherwise noted, analog control shall be one shot into Manual when signal failure is detected on the Process variable. Provide an HMI alarm that indicates that the loop was set to MANUAL.
11. Each Controller shall be configured with an HMI Manual Station function that has the following functions:
    a. The Output of the Manual Station to the Manipulated Device is input back to the PLC.
    b. The Manual Station also has a Remote Status that is input into the PLC.
12. When the Manual Station in Not in Remote, the Loop Controller shall be forced into manual and the manual output shall track the input from the Manual Station.
13. Indicate the Manual Station Local/Remote Status on the HMI.

H. Alarm Processing: Discrete type alarms shall be provided with an adjustable delay timer so that they do not become nuisance alarms.

I. Manual Equipment Control from the PLC:

1. Provide an HMI AUTO/MANUAL mode for PLC-controlled devices. In the HMI AUTO mode, the device shall operate as described in the Loop Specifications. In the HMI MANUAL mode, the operator shall control the device through Start/Stop or Open/Close commands from the HMI.
2. The software AUTO/MANUAL selection shall be allowed only when the device’s panel switch is in the REMOTE or COMPUTER position.

3. Provide MANUAL mode start and stop capability on all equipment, valves, and packaged systems (devices) that are controlled from the PLC, unless otherwise noted.
4. Receive a discrete variable from the HMI in the MANUAL mode, indicating that the device shall start or stop (open or close).
5. When the device is in MANUAL, disable normal sequence of operations from controlling the device. Do not override shut-down interlocks.

J. Run-Time Counters:

1. Provide a run-time counter for all motorized equipment that has an ON signal to the PLC.
2. Accumulate run times in hours with a minimum resolution of 0.1 hour. Counters shall roll over automatically when the accumulator is full.
3. Provide contact from the HMI to reset all run-time counters, on demand.
4. Store all run-time counters in a linear block of PLC memory for transmission to the HMI.

K. Sequences:

1. Sequences specified in the loop descriptions shall have the following general requirements:
   a. All sequences shall be divided into individual steps and be a command report-back type sequence. For example, the PLC shall issue a command for a valve to open (or pump to start) and it shall monitor the valve limit switches (or motor starter auxiliary contact or flow switch) to verify that it did open (or pump start). If the correct feedback status is not received within a preset time limit an individual failed alarm shall be initiated and the sequence stops.
   b. Once a sequence has been started, it shall advance from one step to the next when all of the previous steps commanded by the PLC have been verified by the “report-back” portion of the program.
   c. Each sequence shall have a systems level MANUAL/OFF/AUTOMATIC control from the HMI. In the OFF mode the sequence shall be reset to step 0. In the manual mode the sequence shall be started by an HMI START/STOP control. In the AUTOMATIC mode the sequence shall be started by the specified automatic control functions.
   d. If in any sequence step, a device fails to respond to the control of the PLC the sequence shall stop and remain in the current step. The sequence shall remain in the failed step until the HMI start function is initiated. The sequence shall then retest the current step and advance to the next step if the device has responded to the control action.
   e. Each sequence shall have an HMI JOG function. The JOG function shall advance the step by one, independent of the normal

step advance conditionals and timers as long as the step conditions are met. Otherwise fail the step and prevent any further jogging.

f. Each sequence shall transmit bit variable indicating the active step to the HMI.

L. Totalization: All flow, weight, and power signals shall be totalized in the PLC and the flow totals communicated to the HMI. All totalizers shall be calculated at least every 3 seconds. PLC special function programs shall be configured to scale the process variable to be totalized into gallons, pounds, or KWH in three seconds. These scaled variables shall be accumulated every 3 seconds until an accumulated value is greater than a unit digit value. When the accumulated value is greater than the unit digit value, a totalizing counter shall be incremented by one and the accumulated value subtracted from the unit digit value, and the accumulated value set equal to the result. A threshold detector shall be developed to inhibit the totalizer from totalizing until the process value is greater than a preset percentage of the scale range. Each totalizer shall reset to 0 at 30,000 counts or from a single reset coil shall reset all PLC totalizer counters. The reset coil shall be controlled by the HMI.

M. Process Control Functions Timing:

1. The objective of the process control timing function is to reduce processor loading on any one scan by distributing over four time slots.
2. Provide a timing sequence that is designed to distribute processing of functions in one of four time slots. The duration of each time slot shall be controlled to one scan, approximately 0.25 second.

2.16 LICENSES

A. All software licenses required to operate, maintain, and program the control system components shall be included with the system. The licenses shall be sufficient to meet the process operating and control requirement for the scope of I/O specified (including spare capacity specified). The licenses shall not be limited to the quantity of PLC programs developed at the conclusion of this Project.

B. Ownership of licenses shall be transferred to the Owner at the successful conclusion of the Factory Acceptance Test.

C. The Owner shall be able to copy logic, configuration reports, and database files developed for this Project without limit.

2.17 EQUIPMENT IDENTIFICATION

A. Equipment identification shall comply with Section 01 58 53, Project Equipment Identification, as well as any additional identification requirements listed in this article.

B. White engraved nameplates with black letters on cabinets and devices. As a minimum and per the Drawings, name plates shall indicate:

1. Tag Number.
2. Circuit Number (where applicable).
3. Name.
4. Reference document number.

C. This article is included more to inform the BCS development process with Project standardized tagging and continue the Project standardized tagging within the BCS "programmed" infrastructure.

PART 3 EXECUTION

3.01 INSTALLATION

A. Installation shall be per manufacturer's written recommendations.

B. All work shall be performed in accordance with the Contractor prepared and Owner/Engineer approved construction sequence.

C. Field Quality Control:

1. Provide following field testing:
   a. Field wire termination checks against the I/O schedule.
   b. PLC/HMI network connectivity.
   c. Proper operation of controls.
   d. Proper operation all process devices
   e. Verify incoming power hook-ups.
   f. Verify proper grounding.
2. Provide assistance during initial energization including investigation and remediation of any failures or mis operation of equipment or system.
3. Manufacturer's service personnel shall be factory trained and shall report to the field Site with all tools, test equipment, and materials as required to perform the service required in paragraphs 1 through 3 above.
4. Touch-Up Paint: Contractor is responsible for touch-up paint for any damaged areas during installation.

3.02 TESTING AND INSPECTION - GENERAL

A. The Owner reserves the right to witness all tests and shall be notified at least 21 days in advance of the tests.

B. An Inspection and Test Plan (ITP) shall be provided that identifies the inspections and tests to be performed during manufacture. Based on this ITP the Owner or his representatives may elect to witness shop testing.

C. The Contractor shall enlist the support of equipment Manufacturer services as needed for testing.

D. All control panels and enclosures shall be tested for proper wiring and operation before shipping.

E. The communication software shall be subject to Owner/Engineer witnessed factory and Site acceptance tests. The software shall not be shipped from the place of configuration until the factory acceptance tests have been deemed to have been passed by the Owner/Engineer.

F. For testing of the communication links between the PSS and any existing general or purpose-based control or data interface systems, Contractor can use emulator software to demonstrate the successful communication.

G. Certified test reports for the tests performed shall be transmitted to the Owner prior to shipment of the system. When requested by the Owner, the Contractor shall review the test results with them and obtain approval for shipping.

H. Should the system fail a specified factory test or show abnormal results, the Contractor shall immediately inform the Owner. The cause of the problem and the proposed corrective action shall be discussed with the Owner prior to the implementation of corrective actions. After the problem is corrected, the specific system function shall be re-tested. All repair details shall be documented and included in the Test Report.

I. The Contractor shall provide to the Owner, full cooperation and assistance in any factory inspection at the Contractor's premises provided reasonable written advance notice has been given to Contractor of Owner's requirements.

J. Major items supplied under this Specification by the Contractor shall be given standard applicable tests at the factory during or at the completion of manufacture. A test procedure shall be prepared for each test which shall describe the test to be performed, the satisfactory and unsatisfactory results of the testing, the applicable item of equipment being tested, the standards and method of testing, and the testing facility's capabilities and shall state a proposed test date. All test procedures shall be submitted to the Owner for review. Successful completion of the test shall be a precondition for shipment of the tested item to the jobsite. The Owner shall be notified in writing at least 14 days before any final factory test of any major components.

K. Owner representatives shall participate in formal design reviews at Project kickoff, and at approximately 25 percent and 75 percent completion of control logic and operator graphic development.

3.03 FACTORY ACCEPTANCE TESTS

A. The Contractor's equipment shall be subject to witnessed Factory Acceptance Test (FAT). The control system shall not be shipped from the place of

assembly/configuration until the factory acceptance tests have been deemed to have passed by the Owner.

B. FAT procedures/Test Plan shall be submitted to the Owner a minimum of 30 days prior to factory tests for review/comment.

C. FAT test shall not be scheduled before approval of the FAT test procedure.

D. Factory acceptance test simulation shall include discrete items such as pump and fan motors, motor operated valves, solenoid valves, and circuit breakers. The FAT shall demonstrate that each simulated discrete device can be operated and that its graphic symbol shows the correct status. The FAT shall demonstrate that each control loop can be transferred smoothly between manual and auto mode and can automatically control the simulated process. All transmitter analog signals shall be simulated at the field terminal blocks and verified for correct display in engineering units on the graphic screens. Verify proper working of all controller faceplates, including simulated displays of set points, controller outputs, control valve percent open position displays and AUTO/MANUAL operation. Use a control loop simulator for verifying control algorithms in AUTO mode. The simulator shall allow simulating the “process” for each control loop. Alarm management and failure mode rand recovery scenarios shall be included in the testing. Examples are loss of communications, sequencing failures, I/O loss, peak network activity etc.

E. To the greatest extent practical, communications to subsystems shall be tested during the FAT. Simulate and verify data exchanges between various devices using the data exchange tables as basis. Setup the control system in the factory including the logical nodes, Servers, engineering workstations, and operator workstations as shown on the block diagram. Simulate I/O actions at the I/O modules and observe responses at the local HMI and the remote workstations. Similarly simulate actions at the local HMI and remote workstations and observe responses at the I/O. Simulate and test all control interlocks, sequencing, and control algorithms.

F. Before the control system is shipped to the Site, the control system shall be completely assembled in one location, powered up and a complete, automated, closed-loop Factory Acceptance Test (FAT) performed by the Contractor prior to notifying the Owner that the system is ready for formal factory acceptance testing to be performed with Owner involvement.

G. All software, including application software, all logic programs, automated sequencing and tripping logic, all modulating logic, all HMI screens, logs, and performance calculation software, and all data link software shall be loaded into the control system and tested.

H. All hardware shall be validated which shall include the following as a minimum:

1. A functional test of all inputs and outputs shall be performed.
2. All I/O shall be tested and function and ranges verified.
3. Interconnecting communications cabling shall be installed and the Contractor shall demonstrate, test, and prove all interconnections and communications between the various interconnected components of the control system.
4. Power and ground connections and cabinet wiring shall be inspected for compliance with design Drawings.
5. Branch circuit fuses shall be inspected for compliance with design Drawings.
6. Each cabinet power supply shall be tested for verification of load and fail over capability.
7. Each controller shall be tested for verification of fail over capability.

I. All logic functionality shall be tested and verified using appropriate automated closed loop simulation of field equipment for all loops.

J. All HMI graphic and data points shall be verified. All data links shall be tested and functionality verified.

K. All logs and reports shall be verified.

L. Baseline system parameters shall be provided to the Owner during the Factory Acceptance Test.

M. The FAT shall not take place until the Owner has approved a FAT plan. The FAT plan shall include an overview of the test plan activities, methodology, schedules, and required resources as well as a list of the functional tests to be performed. The procedure shall list the satisfactory acceptance criteria of each test.

N. Contractor shall submit a test procedure 30 days in advance of the FAT for review and approval.

O. All system deficiencies shall be corrected by the Contractor prior to shipping unless otherwise agreed to by the Owner.

P. The actual system database shall be used for all testing.

Q. The Contractor shall demonstrate, test, and prove all interconnections and communication between the various interconnected components of the control system.

R. Minimum FAT Requirements:

1. Checkout of all inputs and outputs, analog and digital.
2. Demonstration of system algorithms by use of loop simulator where applicable.

3. Creating and handling of error and device failure conditions.
4. Redundancy checks and fail-safe proofing.
5. Demonstration of power/fail restart.
6. Demonstration of online database editing capabilities.
7. Demonstration of any CPU and data link loading of system.
8. Demonstrating operation of the application software.
9. Demonstrating of all displays, logs, reports, and operator/user procedures.
10. Demonstrate system to be fully integrated, including hardware and software.

S. The FAT shall be considered successful and approved by the Owner when the system has successfully passed all the tests to the Owner's satisfaction. The Owner must approve any delayed punch list item not repaired during the FAT test. Faulty and/or incorrect operation shall, at the discretion of Owner, be cause for suspension or restart of the FAT test.

T. All control system data interfaces to external control systems shall be demonstrated to be fully configured by installing communications hardware specified for each system interface.

1. Simulated data values from each control system shall be indicated and verified on the HMI Workstation and on the external system display.
2. Data communications transfer rates shall be optimized and documented prior to acceptance and delivery of the control system.

U. The Contractor, after installation and prior to declaring the system operational, shall demonstrate to the satisfaction of the Owner that the system performs in accordance with this Specification and Test Procedure used for the FAT.

3.04 SITE ACCEPTANCE TESTING (SAT)

A. Initial Power-Up and Functional Verification: Upon completion of control system installation at the Project Site, the Contractor shall conduct the initial power-up and onsite system diagnostic and functional tests to verify system functionality and make the system operational. Onsite testing shall be completed as soon as possible after Site system enclosure installation and power feed termination.

B. Communication and Operation Verification: After the system is installed in the Project Site and made operational, the Contractor shall exercise all hardware, communication links, software, and configuration programs to ensure proper operation and prove compliance with the Specifications. The Owner's personnel will use the system during calibration, checkout, and initial operation of plant systems.

C. The Contractor shall supply all special tools or special equipment for erection and commissioning of the control system.

D. Contractor shall submit a SAT procedure 30 days in advance of the SAT for review and approval. An approved SAT procedures submittal is a prerequisite to scheduling a SAT.

E. Minimum Items to be tested During SAT:

1. Redundancy checks and fail-safe proofing.
2. Demonstration of all interconnections and communication between the various interconnected components of the control system.
3. Demonstration of power/fail restart.
4. Demonstrating operation of the application software.
5. Repeat of Factory Tests
6. Demonstrating of all displays, logs, reports, and operator/user procedures.
7. Demonstrate system to be fully integrated, including hardware and software.
8. Final acceptance cannot be given until all equipment is operating safely and satisfactorily, all system functions operational from the workstations and local HMIs, and all punch list items are resolved to Owner's satisfaction. Successful demonstration that the control system is satisfactorily operating system equipment and related balance of plant equipment. All control algorithms are maintaining correct system operation following a disturbance.

3.05 TRAINING

A. Provide training so that the Owner can operate, maintain, change system configuration (including cyber security aspects of the system), and repair the complete system.

B. Provide competent, factory authorized personnel to provide instruction to O&M personnel. Include sufficient hours of training to provide complete training for operation and maintenance of the equipment and system.

C. Provide the name and resume of proposed instructor; instructor shall have at least 5 years of experience as an instructor, with 3 years of experience teaching the designated course. Instructor's primary language shall be English.

D. Owner reserves right to reject proposed instructor. Owner reserves right to have the Integrator repeat portions of the training (at Integrator's expense) if Owner feels training was inadequate.

E. Provide training manual that includes, as a minimum, the following:

1. Course objective.
2. Course outline.
3. Theory of operation.

F. Overview Training:

1. This training shall be for all personnel to describe the system architecture, interconnections, functions, and capabilities:
    a. System Network.
    b. Communication Interfaces.
    c. Workstation Interfaces.
    d. Application Software Programs.
    e. Controller Programming.
    f. Security Configuration/Concepts.
2. Review system terminology, abbreviations, and acronyms.
3. Review screen display data and access.

G. Operator Training:

1. The course shall be an in-depth instruction on the following topics:
    a. Human Machine Interface (HMI).
    b. Display organization.
    c. Alarms.
    d. Device control.
    e. System communications.
    f. System power-up and shutdown.

H. Administrator Programming/Configuration Training:

1. The course shall be an in-depth instruction on the following topics, as a minimum:
    a. Loading software, and printer setup.
    b. Database creation and editing.
    c. Configuration of report formats.
    d. Create and edit HMI displays.
    e. Review diagnostic routines, error reporting and interpretation of results.
    f. Review system-operating software.
    g. Controller addressing, programming and upgrades.
    h. Assigning passwords.
    i. Review and modify system security measures.
    j. Generate backup and restoration of files.
    k. Review programming languages and software structure/organization.
    l. Create and display objects.
    m. Use the program editor.
    n. Access real-time database and other computers/systems on the network.
    o. Integrating programs into the system.
    p. Manage the TCP/IP Network Configuration.
    q. Archive database and system configuration information.
    r. Upgrading hardware and software.

3.06 SPARE PARTS

A. Spare parts and special tools required for one year of operation shall be provided per manufacturer's recommendations. Contractor shall submit list of these spare parts and special tools.

B. Spare parts and special tools for construction, commissioning and startup shall be included. Any such parts used during construction or startup shall be replaced.

C. Spare parts and special tools are to be packaged separately from the equipment and shipped along with the equipment. A tag shall be attached to each part showing equipment tag number, part name or description and Drawing reference and part item number.

D. All spare parts and special tools shall be supplied new and unused.

E. Contractor shall submit a list of recommended spare parts for long-term, reliable operation including pricing. Pricing shall be valid until Project closeout and acceptance.

3.07 O&M MANUALS

A. General: Provide the following:

1. Startup procedures.
2. Training material.
3. Disaster recovery steps.
4. Maintenance and Troubleshooting.
5. Finalized and documented process control logic programs.

3.08 ELECTRICAL POWER AND SIGNAL WIRING

A. Restrain control and signal wiring in control panels by plastic ties or ducts. Secure hinge wiring at each end so bending or twisting shall occur around the longitudinal axis of wire. Protect bend area with a sleeve.

B. Arrange wiring neatly, cut to proper length, and remove surplus wire. Install abrasion protection for wire bundles passing through holes or across edges of sheet metal. All wiring shall have proper cable lugs. No bare wires in terminals shall be accepted. All electrical power and signal wiring shall have appropriate service loop length.

C. Use manufacturer's recommended tool with sized anvil for crimp terminations. No more than one wire may be terminated in a single crimp lug. No more than two lugs may be installed on a single screw terminal.

D. Do not splice or tap wiring except at device terminals or terminal blocks.

3.09 PROTECTION

A. Protect equipment from construction or accidental damage during the installation period prior to system testing and turnover to the Owner.

3.10 ATTACHMENTS:

A. SWBNO IO AND INSTRUMENT LIST as included in 40.91.00 IO and Instrument list.

B. Sequence of Operations Document – (REFERENCE P080 FOR INFORMATION ON THE BOP LOGIC).

C. Related documents: Reference the 1420 PSS I/O cabinet drawing submittal included in Volume 4 of the Contract documents.

END OF SECTION

INTENTIONALLY LEFT BLANK

SECTION 40 94 24
PSS HUMAN MACHINE INTERFACE

PART 1 GENERAL

1.01 SUMMARY

A. This Specification, together with applicable Data Sheets and/or Supplements, covers the technical requirements for the design, materials, equipment, programming, testing services, and construction services required to add the graphics for fuel oil return pumps, control valves 037A and 041 and data link to the fuel oil forwarding pumps to the existing Ignition HMI system provided by Contract 1420. Contractor is to provide a totally functional Human-Machine Interface (HMI) for the Process Supervisory control and data acquisition System (PSS) to enable operator monitoring and control, historical data collection, and data export to business system of the equipment and systems under the PSS's control, as well as HMI system configuration and maintenance access.

B. The Scope includes:

1. Interconnection to the PSS network (Reference IC100) and required network switches to interconnect the Fuel Oil forwarding pumps described in specification 23.13.13.33.
2. All workstations required to perform operator monitoring and control, HMI system configuration, historical data collection, and data export to business system were supplied as part of the 1420 contract.
3. Equipment cabinets housing switches, servers, and other equipment not otherwise deployed for performance of the HMI System functions.
4. Configuration of HMI's and Servers associated with the PSS.
5. Primary HMI shall be located in the Aux Electrical Room. Secondary HMI shall be located in the Central Control Building.
6. Primary control graphics for the balance of plant (BOP) fuel oil forwarding and fuel oil return Reference Attachment 1 for BOP I/O List.
7. Contractor shall include attendance at two graphics workshops (30 percent, 75 percent) at the SWBNO site with an operations and controls team to work out graphic formats and a 90 percent submittal for formal review prior to the IFC issue.
8. Contractor shall be responsible for adding a selected number of Ignition points (20 estimated) and tags to the SWBNO GE/Proficy Historian for the fuel oil forwarding and return systems and then transferring those tags into the Existing Pi Historian.

A. The PSS HMI System as shown on the network overview IC100 is diagrammatic in nature. It is the Contractors responsibility to provide a PSS HMI System that meets the intent of this Specification for a totally functional PSS HMI System.

B. The Contractor is responsible for configuration, application programming, training, and testing to deliver a completely integrated PSS HMI System efficiently communicating with all devices connected to the PSS.

C. The PSS HMI shall comply with the requirements of Section 25 05 11, Cybersecurity for Facility Related Control Systems to ensure system resilience against cyber threats.

D. The PSS HMI System is comprised of both Contractor Supplied and Owner Furnished Equipment as identified in the drawings and specifications.

E. This Specification section does not stand alone and shall be read with Section 40 94 23, PSS Balance of plant Control System which specifies the PSS Balance of plant Control System (BCS). Comprehensive coordination is required between the PSS HMI specified herein and the PSS Balance of plant Control System specified in Section 40 94 23, PSS Balance of plant Control System, as well as other control system interfaces specified in Section 40 94 25, PSS Data Exchange Interface (DEI) which specifies the data exchange interface requirements to enable monitoring and control of the overarching equipment and systems under the PSS's control to implement all specified control and data exchanges between these pieces of equipment, computer work stations, and control system servers to deliver a completely integrated PSS as shown and specified in the Documents. 23.13.13.33 Fuel Oil Forwarding Pump Skid and 23.12.13 Fuel Oil Transfer Equipment contain the fuel oil mechanical equipment information.

F. Careful consideration shall be given to construction sequencing due to the critical nature of the electrical distribution system and high importance given to safety and system availability. At no time during construction shall the Work prevent safe reliable operation of the electrical distribution network.

G. The HMI is a subsystem of the overall PSS, which interconnects other control systems.

H. Owner supplied Onlogic computers for the workstations as part of the 1420 contract, Keyboards, Mice and Monitors are the responsibility of the Contractor.

I. Operator workstations supplied as part of 1420 were installed at WPCAux-0 and CWPCC.

J. A server supplied as part of 1420 was located in the WPCAux-0 electrical room . Servers are supplied by the Owner but Contractor is responsible for all

software, licensing and configuration necessary for equipment integration as specified.

K. Owner will supply the existing Ignition (by Inductive Automation) symbol library used at the plant for Contractor's use in graphic development.

1.02 REFERENCES

A. The latest edition for all codes and standards referenced in this Specification shall be the edition in effect at the time of Contract Award.

B. Industry Standards:

1. International Electrotechnical Commission (IEC):
   a. 60529, Enclosure Protection from Environment.
   b. 61000-4-11, Electromagnetic Compatibility.
   c. 61131, Programmable Controllers.
   d. 62443, Industrial Network and System Security Series.
2. Institute of Electrical and Electronics Engineers (IEEE):
   a. 1050, Generating Station I&C Equipment Grounding.
   b. C37.21, Standard for Control Switchboards.
   c. C37.90.1, Electrical Surge Withstand Capability.
   d. C37.90.2, Radio Frequency Interference.
3. International Society of Automation (ISA):
   a. 101 Human-Machine Interfaces - Standards on HMI Usability and Performance.
   b. 71, Environmental Conditions for Process Measurement and Control Systems.
   c. 77.42.01 (R 2011), Fossil Fuel Power Plant Feedwater Control System - Drum Type.
   d. 62443-2-1, Security for Industrial Automation and Control Systems.
   e. ANSI/ISA 12.12.01-2000, Hazardous Location Certification.
4. National Electrical Manufacturers Association (NEMA): NEMA 250, Enclosures for Electrical Equipment.
5. National Fire Prevention Association (NFPA): NFPA 70, National Electrical Code (NEC).
6. National Fire Prevention Association (NFPA): NFPA 85, Boiler and Combustion Systems Hazards Code.
7. UL:
   a. 508, Safety Standard for Industrial Control Equipment.
   b. 840, Electrical Equipment Insulation Coordination.
   c. 1604, UL Certification for Existing Products.

C. Related Sections, as applicable include but are not limited to:

1. Section 01 33 00, Submittal Procedures.
2. Section 40 90 10, Instrumentation and Control Summary of Work.
3. Section 40 94 23, PSS Balance of Plant Control System.

4. Section 40 94 25, PSS Data Exchange Interface.

D. The Contractor has the ultimate responsibility for the complete identification and execution of all applicable codes, standards, and regulations.

E. Unless otherwise stated, these codes, standards or material specifications shall be the latest revisions, including all effective publications, supplements, addenda, and editions in effect at the issuance date of this document.

F. These codes and standards set forth the minimum requirements. These may be exceeded by the Contractor if, in its judgment and with Owner's acceptance, superior or more economical designs or materials are available.

G. The most severe requirements shall prevail in the event of conflict between requirements, specifications, and applicable and governing codes. All conflicts among the Codes, specifications and/or purchase order shall be brought to the Owner's attention for written resolution prior to release for fabrication.

H. Violations resulting from stipulations in the existing codes shall be corrected by the Contractor at its own expense.

I. The Contractor shall be responsible for obtaining copies and paying all costs of all applicable codes and regulations.

1.03 DEFINITIONS

A. General:

1. BOP: Balance of Plant.
2. Drawings: Drawings includes all technical drawings and documents used to define the system(s) and equipment specified herein.
3. ECS: Electrical Control System.
4. FAT: Factory Acceptance Test.
5. HMI: human-machine interface; a computer-based operator interface for a control system.
6. PCS: Plant Control System.
7. PDCS: Power Distribution Control System.
8. PLC: Programmable Logic Controller
9. PSS: Process SCADA System
10. SAT: Site Acceptance Test.

B. Software:

1. Programming of digital devices using all types of programming language.

2. Configuring of digital devices using all types of configuring process.
3. Programs or configuration data stored in read only memory, programmable read only memory, read/write memory, disk, tape, or other storage device.

C. Types of Software:

1. Standard Software: Software packages that are independent of project on which they are used. Standard software includes system software and process monitoring and control software.
   a. System Software: Application independent software developed by Microsoft. Includes, but is not limited to, Microsoft's NT operating system; file management utilities; text editors; debugging aids; and diagnostics.
   b. Process Monitoring and Control Software (PMCS): Software packages independent of specific process control project on which they are used. Includes, but is not limited to, providing capability for, data acquisition, monitoring, alarming, man-machine interface, data collection, data retrieval, trending, report generation, control, and diagnostics.
2. Application Software:
   a. Software to provide functions unique to this Project and that are not provided by standard software alone.
   b. Configuring databases, tables, displays, reports, parameter lists ladder logic, and control strategies required to implement functions unique to this Project.

1.04 SOFTWARE DESIGN WORKSHOPS

A. Location: Owner's facility during the course of the Project. Software Workshops shall coincide with the incremental project review schedule.

B. Objective: To provide a vehicle for the Owner to oversee the applications software development.

C. Documentation: Software Contractor shall summarize resolutions reached in each workshop, including cost and schedule impacts and distribute copies to Owner and Engineer.

D. Workshops:

1. HMI Software Standards Submittal Workshop:
   a. HMI Standards shall be refined and expanded as needed for functionality new to this Project.
      1) Objective: Review Owner's existing HMI standards in a participative workshop with the Owner. Refine and expand as needed for functionality new to this Project.

2) Topics to be finalized:
   a) Owner's HMI Tag naming conventions.
   b) Overview display design.
   c) Process graphics.
   d) Display paging and navigation.
   e) Dynamic Objects: Pumps, valves, gates, compressors, etc.
   f) Equipment control through popup windows.
   g) Loop control through pop-up windows.
   h) Display philosophy, organization and operation.
   i) General data entry through the HMI.
   j) Use of tool tips.
   k) Color graphic standards, symbol standards, etc.
   l) Dynamic Objects: Pumps, compressors, valves, gates, controller faceplates, process indicators, indicators with alarms, data entry, controller face plate, damplers, aerator, chemical feed pump, mixers.
   m) Security.
   n) Alarm Management: Operation of the alarms, alarm areas, alarm filtering.
   o) Trending.
   p) Historical data storage and retrieval.
   q) Variable naming conventions.
   r) Scripting.
   s) Tag Group file naming convention.
   t) Display file naming convention.

2. HMI Preliminary Graphics Workshops:
   a. Objective: To present to Engineer and Owner how Applications Software Contractor shall implement functional requirements of this section.
   b. Present information on: HMI Screen sketches that illustrate dynamic objects, how control functions are controlled and monitored, how equipment is controlled and HMI screen navigation.

1.05 SUBMITTALS

A. Documentation shall be provided in accordance with the Submittal Register and Section 01 33 00, Submittal Procedures.

B. Contractor shall provide the following information:

1. Drawing list and submittal schedule.
2. Completed Fill-In Data Sheet.
3. A layout Drawing of the proposed system showing all modules used within the system.
4. Overall system architecture and communications diagram.

5. A physical Drawing stating all dimensions of the system enclosures as well as a detailed bill of materials for each enclosure.
6. All standard product literature pertinent to the proposed system on USB flash media.
7. Bill of materials, which shall use actual manufacturer names and part numbers, not Contractor tracking codes.
8. Manufacturer's product data sheets annotated for specific application for each component.
9. Installation Drawings, instructions and manuals.
10. Operation and maintenance manuals for all hardware and software.
11. Logic and HMI graphics programming documentation (see below).

C. The Contractor shall provide logic at 75 percent completion for Owner review and comment.

D. The Contractor shall provide HMI graphics at 75 percent completion for Owner/Engineer review and comment.

E. Contractor shall provide one final hard copy and one electronic copy of all configuration files, upon successful completion of the Factory Acceptance Test (FAT).

1.06 QUALITY ASSURANCE

A. The Contractor shall maintain a quality manual/system that meets the requirements of the applicable international quality system standard, as well as ISO 9000 requirements, throughout the duration of the Project.

B. The Contractor quality plan shall be issued for review and for monitoring during the Project. Reporting requirements shall include the Owner requirements and additional requirements as stated below.

C. The Contractor shall be responsible to ensure that the Contractors and Sub-Contractors meet the intent of the requirements of this Specification and are able to demonstrate their compliance.

D. Requirements covered by this Purchase Order/Specification shall apply to lower tier Sub-Contractors, including Owner's access (accompanied by Contractor) to facilities and records.

E. All materials and hardware to be furnished and all Work to be performed under this Specification shall be subject to review, inspection, and testing as described below.

1.07 WARRANTY AND GUARANTEES

A. The Contractor shall provide copies of Manufacturer's warranties and the Contractor's extended guarantee or warranty with Owner named as beneficiary in writing as special guarantee.

B. The Contractor shall warrant that the equipment shall be supplied in accordance with these Specifications and shall perform as described herein.

C. The Contractor shall warrant that the equipment provided shall be free from defects in materials and workmanship for a period of 12 months after acceptance by Owner.

D. The Contractor (or equipment Manufacturer under the supervision of the Contractor) shall repair or provide a replacement for any defective component under the warranty provided that any such defect was not the result of misuse of the equipment by the Owner or the Owner's representative.

PART 2 PRODUCTS

2.01 HMI SYSTEM GENERAL DESIGN

A. System electronics shall be shielded against electromagnetic interferences and shall be capable of withstanding power surges.

B. All system equipment shall be designed with a temperature margin allowance for heat buildup inside the enclosure in which the equipment is mounted.

C. Equipment shall be designed to operate on 120V ac, 60Hz, single-phase power.

D. Each PSS logical node shall be supplied with one HMI. The HMI shall be configured for local ONLY PSS controlled equipment operations and system wide status display.

E. Centralized HMIs shall be industrial grade and capable of communicating with the PSS/BCS.

F. HMI shall be capable of providing overview displays, group displays, loop displays, alarm displays, graphics, and trending.

G. HMI interface shall support high-resolution graphics with a minimum resolution size of 1920x1080 pixels and a 16:9 aspect ratio.

H. Workstations shall be deployed with Owner specific image as supplied by Owner's IT personnel. Workstation hardware shall be as defined in attachments.

I. Onlogic ML500G-50 industrial computers shall be Owner furnished for the Project. Monitors, keyboards and mice are the responsibility of the Contractor.

J. KVM switches shall be supplied for consolidation of keyboards, mice, and displays in the Aux Electrical Control Room due to space considerations. Switches shall be compatible with the Owner furnished industrial computers as well as the Solar T7 workstation and CEMS computers.

2.02 GENERAL HMI CONFIGURATION REQUIREMENTS

A. The following defines the minimum graphics information and functionality for configured HMIs:

1. All graphics shall have the data and time displayed on the page.
2. Graphics shall be configured in a consistent manner, for example, common information displayed on all graphics shall be located in the same place on each graphic, e.g. time, date, navigation arrows, etc.
3. All graphic control shall indicate when their associated control is not operable.
4. All graphics shall show status changes in a manner that permits recognition by colorblind operators.
5. All graphics shall indicate bad quality for the given process points.
6. All HMI graphics require Owner/Engineer approval.
7. Communication/Control System Status Display:
   a. Displays shall be available showing status of all communication links on the system.
   b. When failure condition is detected on a communication device on the network, the operator shall be alerted.
   c. Graphic symbols shall change color to indicate malfunctions.
8. Graphics shall be based on ISA 101 standards on HMI usability and performance.
9. Graphics to be based on the High-Performance HMI standard which ensures graphics are created in grayscale, with color intended to be the attention-getter.

B. Histories:

1. An event history shall be capable of storing up to 200 points. The data shall be stored in a one-hour circular buffer and provide data for a combined 1-hour pre-trip and post trip log.
2. A point attribute history shall provide for the storage of database attributes of the real-time variable for trending and reporting of data.
3. A history of the operator alarms shall be stored for the alarm log.
4. A history of the operator events (actions) shall be stored for the operator log.
5. The Ignition historian is to be configured for logging of points within the PSS. The Contractor shall prepare first out trip logs within the limitations of the field hardware and communication links.

2.03 SPECIFIC HMI CONFIGURATION REQUIREMENTS – OPERATOR AND ENGINEERING WORKSTATIONS

A. For situations where the Workstation HMI is not local to the control system enclosure, the Owner will provide workstations appropriate to the environment for the operator HMI.

B. For uncontrolled environments a hardened industrial monitor and hardened industrial computer shall be provided in a free standing enclosure suitable for the surrounding environmental conditions. The free standing enclosure shall include provisions for an industrial keyboard and mouse. The display shall be mounted such that the operator can stand in a comfortable position in front of the enclosure.

C. Access to the Workstation shall be controlled using individual username and password.

D. Onlogic ML500G-50 industrial computers will be Owner furnished for the Project.

E. KVM switches shall be supplied for consolidation of displays in the Aux Electrical Control Room due to space considerations.

F. The Contractor shall provide and install the runtime and development server software with appropriate licenses. Appropriate licenses is defined as the required number of tags plus 20 percent spare. All development and runtime software, licenses and drivers shall be purchased and turned over to the Owner with the equipment. The HMI shall be configured according to best practices followed in the power industry for similar applications.

G. The graphics display shall have the ability to display all control loop information, process/template graphics and other various input data. Cursor position control shall be provided by keypad, trackball and/or mouse, or keypad operation. Connections to be USB interface, PS/2 is not allowed.

H. Historical trending data shall be stored on hard disk (or similar devices), and the system shall be capable of trending all values in the control system. The Workstation shall be ergonomically designed and rated for the surrounding environmental conditions. The Workstation shall operate from a Microsoft Windows operating system per Owner Specifications. The access to the workstation shall be controlled using individual username and password.

2.04 OPERATOR INTERFACE HMI CONFIGURATION REQUIREMENTS:

A. The Operator Interface HMI shall consist of a high-end graphics operator interface. The primary function of the HMI shall be for daily operation, but it shall also support initial configuration of control system parameters, maintenance tasks, and troubleshooting. All control related tasks shall be accomplished through the HMI.

B. Graphic displays shall use pop-up windows. These shall be predefined during configuration for size, content and location. The content of each pop-up window shall include dynamic displays for text, (change of state) numeric, and graphic data.

C. The process graphic displays shall be fully interactive displays providing full process monitoring and manipulation. This interaction shall allow for the changing of setpoint, output, mode, ratio, bias, etc., for modulating parameters. The interaction shall also allow for issuance of start/stop and open/close commands for loops.

D. The process graphic displays shall use windowing capabilities to pull up windows with the individual faceplate for all analog or on-off (digital) loops that are operated from the graphic. Windows shall also be used for equipment diagnostic displays separately showing dynamic permissive and interlocks for all analog and digital control loops.

E. All HMI graphics require Owner/Engineer approval.

F. From the HMI the operator shall have complete control of the equipment. These include the following as a minimum:

1. The operator shall interactively control equipment from the graphics using either the keyboard or mouse on a remote HMI or keypad and function keys on an enclosure mounted HMI.
2. For modulating control loops, the operator shall be able to adjust the loop setpoint, set controller output in manual, set the bias and ratio adjustments and select the controller operating mode, such as auto or manual.
3. The operator shall be able to start and stop equipment, open and close valves or position dampers, start or stop sequences, etc.
4. The operator shall be able to tag out equipment through the faceplate displays for maintenance.

G. It shall be possible for the operator to initiate and perform all of the graphic display functions described in this section. These include the following as a minimum:

1. Recent SWBNO graphics utilize the HMI Graphics Standards attached in Supplement 4. Where they differ from the requirements below, the requirements for Topology, Structure, Format, Functionality and Human Factor Engineering, in Supplement 4 take precedence.
2. Overview displays:
   a. Shall provide the operator with a summary of the state of the major control loops and variables in the system.
   b. Shall indicate the relative deviation between each control loop's process value and its setpoint or target value.
   c. When a control loop reaches or exceeds the maximum deviation, a visual alarm shall appear on the display advising the operator where the abnormal condition is occurring.
   d. The overview display shall indicate the control loop mode.
3. Faceplate displays:
   This display shall provide the operator with control and monitoring information on a single analog control loop or on/off controlled

equipment in the system. Faceplate displays shall be provided for each device controlled.

a. In all cases, faceplate displays may contain multiple control functions and status and allow mode selections for automatic sequenced control (i.e. load demand computer, equipment train start-up/shutdown, etc.).
b. All equipment shall be controlled through faceplate displays.
c. Faceplate displays shall "pop-up" from graphics for status and control of equipment.
d. The information shown on the display shall include, as a minimum and as applicable, the following: loop description, loop ID (tag), process variable, setpoint and output graphic as shown for that loop in the group display and status (manual, cascade, auto, on, off, tag out, and final drive power available). All tuning parameters, configuration parameters and alarm limits for the loop shall be available on a separate point ID or loop display.

4. Pop-up Window Displays:
   a. Pop-up windows shall be used for the operator call-up of faceplate, preprogrammed trend displays, status or help, and tag-out displays from process graphic, faceplate group, or other pop up displays.
   b. Pop-up windows shall include a poke-field target or similar means to return to the previously displayed pop-up window or graphic.
   c. Faceplate pop-ups shall be called from each equipment symbol on process graphics or from other faceplates where equipment operation is slaved or closely associated.
   d. Tag-out display pop-ups shall be called from each faceplate. The tag-out display shall allow the tag-out operation as indicated on the faceplate. The tag-out display shall show all tags applied to the device. The display shall include the tag's serial number, comment, date, and time stamp.
5. Single-point definition displays of Analog and Digital process points and shall include the following information:
   a. Process point ID.
   b. Process point description.
   c. Value or status.
   d. Engineering units (if applicable).
   e. High and low alarm limits (if applicable).
   f. High and low re-alarm limits (if applicable).
   g. High and low trip limits (if applicable).
   h. Rate of change alarm (if applicable).
   i. Return to normal dead band values (if applicable).
   j. Calibration data.
6. Group log displays with the following information:
   a. Group log identification.
   b. Point ID and description of each point.
   c. Value and status of each point.

d. Engineering units (if applicable).
e. Date and time.

7. Trend displays:
   a. Trend displays for each point shall include the point description, time base and ordinate magnitude.
   b. The trend time base shall be assignable.
   c. Trending of historical information shall be available. The operator shall be able to scroll backward or forward through the data.
   d. All trend displays shall include date, time, and load.
   e. Bar charts, data tables, and other customized graphic displays.
8. Data Logging Functions:
   a. The system shall have the data logs built in the HMI.
   b. All data logs shall have the date and time displayed on top of page.
   c. The control system shall have the capability to store data automatically or manually on the archival storage device when it exceeds the memory capacity of the system.
   d. The operator shall have the capability to demand a printout of a periodic log at any time. The printout of this log shall consist of the hourly values and the end of day values of each variable at the time of demand.
   e. The periodic log shall have the capability to spool data for historical storage for the Owner's use off the system.
9. Operator Action Log:
   a. The system shall maintain a log of any operator control action from the console.
   b. The log shall maintain all action of assigned points for at least the most recent 72 hours.
   c. The log shall be capable of being displayed on the operator console or printed on demand.
10. Alarm displays:
   a. The alarm summary shall list all alarms as well as points exceeding re-alarm limits. These alarms shall be listed in the sequence they were detected.
   b. Messages for alarms, displayed on the overview display, shall include the following information: point tag (ID), point description, value or status, engineering units (if applicable), date and time.
   c. All system alarms shall be available for historical operator information, and the operator shall be able to shift pages for alarm review.
11. Communication/Control System Status Display:
   a. Displays shall be available showing status of all communication links on the system, including data highway between control system controllers and remote I/O links.

b. When failure condition is detected on a communication device on the network, the operator shall be alerted.
c. Graphic symbols shall change color to indicate malfunctions.

12. Device Diagnostic Display:
    a. Displays shall be available that indicate the status and nature of any malfunctions to the card level.
    b. The system shall notify the operator when a malfunction has occurred.

2.05 CONFIGURATION AND PROGRAMMING OF SERVERS AND WORKSTATIONS

A. Configuration and programming of following, but not limited to, HMI equipment is part of the scope of the Work:

1. Primary Operations Location Servers.
2. Alternate Operations Location Servers.
3. Primary Operations Location Operator Workstation(s).
4. Alternate Operations Location Operator Workstation(s).
5. Primary Operations Engineering Location Engineering Workstation(s).
6. Alternate Operations Engineering Location Engineering Workstation(s).
7. All network switches, printers, and other hardware furnished and shown on the block diagrams.
8. Reference 1.1 J-M for locations and counts.

B. Configuration and Application programming shall follow the same functional requirements specified in paragraph Configuration and Programming of Servers and Workstations. Basically, all of the control and monitoring features available at the local HMI shall be available at the workstations. Provide all standard data storage and retrieval functions.

2.06 COMMUNICATIONS

A. All interface data communication shall be managed by the common PSS communications scheme.

B. All interface system communications shall be evaluated against the Risk Management Framework (RMF) and be considered Operational Technology (OT) category RMF Level 1 or 2.

C. Where technologically feasible interface system communications links shall be deterministic and utilize cybersecure methods to ensure system resilience against cyber threats.

D. Communication Protocols: Interface to the HMI, servers and operator workstations shall be via Modbus TCP/IP connection unless otherwise required by system hardware or approved alternate configuration. Interface from Logic Controllers to the HMI, servers, workstations, etc., shall be IEEE 802.3 (1000BASE-T/Fiber). Interface to field PLC's to primary logic solvers shall be Modbus TCP/IP on single mode fiber.

E. Data Processing and Communication:

1. All dynamic data displays shall be updated often enough to permit safe and functional control.
2. System capacity and performance shall be based on a minimum of five attributes from every controlled device based on a configurable triggering event. In other words, the HMI shall monitor at least five metrics in each PLC with adjustable setpoints and generate a system capacity/performance alarm if any of the five metrics are exceeded. Examples of the metrics include available hard drive or storage space, %CPU usage, %Memory Usage, Network Throughput, Data Error rate/quality, Minor/Major Fault flags, etc.

2.07 HMI CONFIGURATION SOFTWARE

A. Contractor shall provide and configure the HMI workstation using Ignition software with appropriate licenses.

B. Drivers shall be Kepware with IGS drivers.

C. Any required updates to existing licenses or hardware shall be the responsibility of the Contractor.

2.08 HMI APPLICATION SOFTWARE DESIGN REQUIREMENTS

A. General:

1. The Contractor or qualified Systems Integrator shall develop the HMI design to convey accurate information to the plant operations staff so they can make informed process control decisions and provide the platform to execute the control decisions.
2. HMI Application software shall be compliant with the Owner HMI standards.
3. HMI Application software shall be developed after reviewing Owner's existing HMI configuration at the SWBNO WTP.
4. The following outlines key objectives in designing the HMI graphics displays:
   a. Easily navigated menus.
   b. Maintain consistent and predictable window operations.
   c. Accurate representation of the plant and its operations.

d. Represent control options in an easily understood fashion.
e. Develop help screens to provide additional information to help the operations staff understand the control options where complex operations are required.

2.09 STANDARD PLC/HMI FUNCTIONS BLOCKS

A. Refer to Section 40 94 23, PSS Balance of Plant Control System, paragraph Standard PLC/HMI Functions Blocks.

2.10 LICENSES

A. All software licenses required to operate, maintain, and program the control system components shall be included with the system. The licenses shall be sufficient to meet the process operating and control requirement for the scope of I/O specified (including spare capacity specified). The licenses shall not be limited to the quantity of HMI graphic screens.

B. Ownership of licenses shall be transferred to the Owner at the successful conclusion of the Factory Acceptance Test.

C. The Owner shall be able to copy displays, configuration drawings, and database files developed for this Project without limit.

2.11 EQUIPMENT IDENTIFICATION

A. Equipment identification shall comply with Section 01 58 53, Project Equipment Identification, as well as any additional identification requirements listed in this article.

B. White engraved nameplates with black letters on cabinets and devices. As a minimum and per the Drawings, name plates shall indicate:

1. Tag Number.
2. Circuit Number (where applicable).
3. Name.
4. Reference document number.

C. This article is included more to inform the HMI development process with Project standardized tagging and continue the Project standardized tagging within the HMI “programmed” infrastructure.

PART 3 EXECUTION

3.01 INSTALLATION

A. Installation shall be per manufacturer's written recommendations.

B. All work shall be performed in accordance with the Contractor prepared and Owner/Engineer approved construction sequence.

C. Field Quality Control:

1. Provide following field testing:
    a. Proper operation of plant controls.
    b. Auto/Manual operation.
    c. Graphics Hierarchy is functional.
    d. Alarm management is functioning properly.
    e. Archiving and Historian are functioning properly and that adequate storage is available and sampling times are correct.
    f. Verify all field cable connections. This includes but is not limited to communication, cabling, power and grounding, etc.
2. Provide assistance during initial energization including investigation and remediation of any failures or mis operation of equipment or system.
3. Manufacturer's service personnel shall be factory trained and shall report to the field Site with all tools, test equipment, and materials as required to perform the service required in paragraphs 1 through 3 above.

3.02 TESTING AND INSPECTION - GENERAL

A. The Owner reserves the right to witness all tests and shall be notified at least 21 days in advance of the tests. An approved test plan shall be in place before scheduling any test.

B. The Contractor shall enlist the support of equipment Manufacturer services as needed for testing.

C. All control panels and enclosures shall be tested for proper wiring and operation before shipping and initial energization onsite.

D. The system shall be subject to Owner witnessed factory and Site acceptance tests. The system shall not be shipped from the place of assembly and configuration until the factory acceptance tests have been deemed to have been passed by the Owner.

E. Certified test reports for the tests performed shall be transmitted to the Owner prior to shipment of the system. When requested by the Owner, the Contractor shall review the test results with them and obtain approval for shipping.

F. Should the system fail a specified factory test or show abnormal results, the Contractor shall immediately inform the Owner. The cause of the problem and the proposed corrective action shall be discussed with the Owner prior to the implementation of corrective actions. After the problem is corrected, the specific system function shall be re-tested. All repair details shall be documented and included in the Test Report.

G. The Contractor shall provide to the Owner, full cooperation and assistance in any factory inspection at the Contractor's premises provided reasonable written advance notice has been given to Contractor.

H. Major items supplied under this Specification by the Contractor shall be given standard applicable tests at the factory during or at the completion of manufacture. A test procedure shall be prepared for each test that shall describe the test to be performed, the applicable item of equipment being tested, the standards and method of testing, the defined satisfactory and unsatisfactory results of the tests, and the testing facility's capabilities and shall state a proposed test date. All test procedures shall be submitted to the Owner for review. Successful completion of the test shall be a precondition for shipment of the tested item to the jobsite. The Owner shall be notified in writing at least 21 days before any final factory test of any major components. An approved test plan shall be in place before scheduling a factory test.

I. Owner's representatives shall participate in formal design reviews at Project kickoff, and at approximately 25 percent and 75 percent completion of control logic and operator graphic development.

3.03 FACTORY ACCEPTANCE TESTS

A. The Contractor's equipment shall be subject to witnessed Factory Acceptance Test (FAT). The system shall not be shipped from the place of assembly/configuration until the factory acceptance tests have been deemed to have passed by the Owner. The Owner reserves the right to witness any Factory Acceptance Testing (FAT) and a minimum of 21 days' notice shall be given to Owner prior to start of FAT.

B. FAT procedures shall be submitted to the Owner/Engineer a minimum of 30 days prior to said tests for review/comment.

C. FAT test shall not be scheduled before approval of the FAT procedure.

D. Factory acceptance test simulation shall include discrete items such as pump and fan motors, motor operated valves, solenoid valves, and circuit breakers. The FAT shall demonstrate that each simulated discrete device can be operated and that its graphic symbol shows the correct status. The FAT shall demonstrate that each control loop can be transferred smoothly between manual and auto mode and can automatically control the simulated process.

E. To the greatest extent practical, communications to subsystems shall be tested during the FAT.

F. Before the equipment is shipped to the Site, the equipment shall be completely assembled in one location, powered up and a complete, automated, closed-loop Factory Acceptance Test (FAT) performed by the Contractor prior to notifying the Owner/Engineer that the system is ready for formal factory acceptance testing to be performed with the Owner involvement.

G. All software, including application software, all logic programs, automated sequencing and tripping logic, all modulating logic, all HMI screens, logs, and performance calculation software, and all data link software shall be loaded into the equipment and tested. Use a Control loop simulator to simulate the process for each control loop.

H. All hardware shall be validated which shall include the following as a minimum:

1. A functional test of all inputs and outputs shall be performed.
2. The rack, slot, and channel assignment of each signal shall be verified.
3. All I/O shall be tested, and function and ranges verified.
4. Interconnecting communications cabling shall be installed, and the Contractor shall demonstrate, test, and prove all interconnections and communications between the various interconnected components of the control system.
5. Verify interfaces with the external systems using simulated hardwired I/O and Ethernet Data Exchange Tables as applicable. Likewise, the server and workstation interfaces shall be simulated using a Laptop simulator to generate the data exchange.
6. Power and ground connections and cabinet wiring shall be inspected for compliance with design Drawings.
7. Branch circuit fuses shall be inspected for compliance with design Drawings.
8. Each cabinet power supply shall be tested for verification of load and fail over capability.

I. All logic functionality shall be tested and verified using appropriate automated closed loop simulation of field equipment for all loops.

J. All HMI graphic and data points shall be verified.

K. All logs and reports shall be verified.

L. Baseline system parameters shall be provided to the Owner/Engineer during the Factory Acceptance Test.

M. The FAT shall not take place until the Owner has approved a FAT plan. The FAT plan shall include an overview of the test plan activities, methodology, schedules, and required resources as well as a list of the functional tests to be performed. The procedure shall list the satisfactory acceptance criteria of each test as well as unsatisfactory criteria.

N. Contractor shall submit a test procedure 30 days in advance of the FAT for review and approval.

O. All system deficiencies shall be corrected by the Contractor prior to shipping unless otherwise agreed to by the Owner/Engineer.

P. The actual system database shall be used for all testing.

Q. The Contractor shall demonstrate, test, and prove all interconnections and communication between the various interconnected components of the control system.

R. Minimum FAT Requirements:

1. Checkout of all inputs and outputs, analog and digital.
2. Demonstration of system algorithms by use of loop simulator where applicable.
3. Creating and handling of error and device failure conditions.
4. Redundancy checks and fail-safe proofing.
5. Demonstration of power/fail restart.
6. Demonstration of online database editing capabilities.
7. Demonstration of any CPU and data link loading of system.
8. Demonstrating operation of the application software.
9. Demonstrating all displays, logs, reports, and operator/user procedures.
10. Demonstrate system to be fully integrated, including hardware and software.
11. Demonstration of error free operation of Data Exchange Tables (DETs) using laptop to simulate the servers and workstations. Test and verify all READ and WRITE BITS and WORDS are exchange correctly at both ends.

S. The FAT shall be considered successful and approved by the Owner when the system has successfully passed all the tests to the Owner’s satisfaction. The Owner shall approve any delayed punch list item not repaired during the FAT test. Faulty and/or incorrect operation shall, at the discretion of Owner, be cause for suspension or restart of the FAT test.

T. All data interfaces to external control systems shall be demonstrated to be fully configured by installing communications hardware specified for each system interface.

1. Simulated data values from each control system shall be indicated and verified on the HMI Workstation and on the external system display.
2. Data communications transfer rates shall be optimized and documented prior to acceptance and delivery of the system.

U. The Contractor, after installation and prior to declaring the system operational, shall demonstrate to the satisfaction of the Owner that the system performs in accordance with this Specification and Test Procedure used for the FAT.

3.04 SITE ACCEPTANCE TESTING (SAT)

A. Initial Power-Up and Functional Verification: Upon completion of system installation at the Project Site, the Contractor shall conduct the initial power-up and onsite system diagnostic and functional tests to verify system functionality and make the system operational. Onsite testing shall be completed as soon as possible after Site system enclosure installation and power feed termination.

B. Communication and Operation Verification: After the system is installed in the Project Site and made operational, the Contractor shall exercise all hardware, communication links, software, and configuration programs to ensure proper operation and prove compliance with the Specifications. The Owner's personnel shall use the system during calibration, checkout, and initial operation of plant systems.

C. The Contractor shall supply all special tools or special equipment for erection and commissioning of the Work.

D. Contractor shall submit a SAT procedure 30 days in advance of the SAT for review and approval. Approved Test Plan is a prerequisite to conducting SAT.

E. Minimum Items to be Tested During SAT:

1. Demonstration of all interconnections and communication between the various interconnected components of the system including field instrumentation connected to the control system and related signal integrity.
2. All I/O tests shall be in cause and effect format. Initiate an action at the HMI and observe response at the final control element. Initiate an action at a field sensor and observe response at the HMI.
3. Repeat of the FAT done at the Contractor's facility.
4. Demonstration of power/fail restart, and failover scheme.

5. Demonstrating operation of the application software.
6. Demonstrating all displays, logs, reports, and operator/user procedures.
7. Demonstrate system to be fully integrated, including hardware and software.
8. Demonstrate satisfactory data exchange between the PSS, any external interfaces, the Servers and Operator Workstations.
9. Final acceptance cannot be given until all equipment is operating safely and satisfactorily, all system functions operational from the workstations and local HMIs, and all punch list items are resolved to Owner's satisfaction. Successful demonstration that the control system is satisfactorily operating system equipment and related balance of plant equipment. All control algorithms are maintaining correct system operation following a disturbance.

3.05 TRAINING

A. Provide training so that the Owner can operate, maintain, change system configuration (including cyber security aspects of the system), and repair the complete system. Owner personnel will include Operators, Engineers, and System Administrators.

B. Provide competent, factory authorized personnel to provide instruction to O&M personnel. Include sufficient hours of training to provide complete training for operation and maintenance of the equipment and system.

C. Provide the name and resume of proposed instructor; instructor shall have at least 5 years of experience as an instructor, with 3 years of experience teaching the designated course. Instructor's primary language shall be English.

D. Owner reserves right to reject proposed instructor. Owner reserves right to have the Integrator repeat portions of the training (at Integrator's expense) if Owner feels training was inadequate.

E. Provide training manual that includes, as a minimum, the following:

1. Course objective.
2. Course outline.
3. Theory of operation.

F. Overview Training:

1. This training shall be for all personnel to describe the system architecture, interconnections, functions, and capabilities:
    a. System Network.
    b. Communication Interfaces.
    c. Workstation Interfaces.
    d. Application Software Programs.

e. Controller Programming.
f. Security Configuration/Concepts.

2. Review system terminology, abbreviations, and acronyms.
3. Review screen display data and access.

G. Operator Training:

1. The course shall be an in-depth instruction on the following topics:
   a. Human Machine Interface (HMI).
   b. Display organization.
   c. Alarms.
   d. Device control.
   e. System communications.
   f. System power-up and shutdown.

H. Administrator Programming/Configuration Training:

1. The course shall be an in-depth instruction on the following topics, as a minimum:
   a. Loading software, and printer setup.
   b. Database creation and editing.
   c. Configuration of report formats.
   d. Create and edit HMI displays.
   e. Review diagnostic routines, error reporting and interpretation of results.
   f. Review system-operating software.
   g. Controller addressing, programming and upgrades.
   h. Assigning passwords.
   i. Review and modify system security measures.
   j. Generate backup and restoration of files
   k. Review programming languages and software structure/organization.
   l. Create and display objects.
   m. Use the program editor.
   n. Access real-time database and other computers/systems on the network.
   o. Integrating programs into the system.
   p. Manage the TCP/IP Network Configuration.
   q. Archive database and system configuration information.
   r. Upgrading hardware and software.

3.06 SPARE PARTS

A. Spare parts and special tools required for one year of operation shall be provided per manufacturer's recommendations. Contractor shall submit list of these spare parts and special tools.

B. Spare parts and special tools for construction, commissioning and startup shall be included. Any such parts used during construction or startup shall be replaced.

C. Spare parts and special tools are to be packaged separately from the equipment and shipped along with the equipment. A tag shall be attached to each part showing equipment tag number, part name or description and Drawing reference and part item number.

D. All spare parts and special tools shall be supplied new and unused.

E. Contractor shall submit a list of recommended spare parts for long-term, reliable operation including pricing. Pricing shall be valid until Project closeout and acceptance.

3.07 O&M MANUALS

A. General: Provide the following:

1. Suggested startup procedures.
2. Training material.
3. Alarm summaries.

B. Software: Provide the following:

1. Finalized loop specifications.
2. Documented ladder programs.

3.08 PROTECTION

A. Protect equipment from construction or accidental damage during the installation period prior to system testing and turnover to the Owner.

3.09 ATTACHMENTS

A. The supplements listed below, following "End of Section," are part of this Specification.

1. SWBNO BOP IO and Instrument List included in 40.91.00 IO and Instrument List
2. Not included Refer to 1420 reference package graphic submittal Fuel Oil Forwarding Pump Modbus List by 1444 Contractor - Reference 23.13.13.33
3. Related documents: Reference the 1420 PSS I/O cabinet drawing submittal included in Volume 4 of the Contract documents.

4. PDCS HMI Graphics Standard

END OF SECTION

INTENTIONALLY LEFT BLANK

SUPPLEMENT 40 94 24
PDCS HMI GRAPHICS STANDARD

1 GENERAL

1.01 SUMMARY

A. This Supplement, together with applicable Data Sheets and/or Supplements, augments the requirements for the design, configuration/programming, testing services, and construction services required to provide totally functional Power Distribution Control System (PDCS) Human Machine Interface (HMI) graphics fully integrated into the PDCS HMI system(s) for a fully functional user interface.

B. The overarching premise of PDCS HMI graphics is the consistent legible graphical presentation of PDCS information for efficient user interaction and execution. A measure of success for achieving this premise is the ability to access desired information and/or control function in, at most, three steps.

C. PDCS HMI graphics are generally developed for two form-factors; (i) main control room and (ii) equipment node. The (i) main control room form-factor is a multi-screen workstation interface, with keyboard and mouse, versus the
(ii) equipment node form-factor of a single touch-screen interface. The (i) main control room is where operators are stationed 24/7/365 observing and operating system control elements remotely from the system control elements. The (ii) equipment node is where personnel are local, or at least close proximity, to operated equipment and executing system control in relative close proximity to operated equipment.

D. The nature of the PDCS system being dominantly ‘electrical’, a key system graphic diagram is a one line diagram, comparable to a P&ID in a process oriented control system. The PDCS HMI graphic screen content heavily refer to one line diagrams in varying levels of detail.

E. The PDCS HMI graphics are organized hierarchically in Graphic Groups, from general overview graphics content to progressively more specific graphics content, with additional specialty graphics content groups.

F. The PDCS is capable of various modes of operation to ensure reliable and efficient electrical distribution network operation.

G. This supplement outlines the guiding HMI graphics functionalities, modes of operation, and presentation for the PDCS. The graphics concepts are a combination of existing graphics styles, general industrial control system graphics principles, and common industry standards. Where practical the principles of High Performance Graphics shall be utilized in the graphics development.

H. The PDCS HMI graphics standard is organized into the following main topics:

1. Topology
2. Structure
3. Format
4. Functionality

I. An important design and implementation principle is that HMI graphics do NOT include control logic. Control logic is deliberately organized and outside of the HMI system, stated otherwise, is further down in the RMF. HMI graphics are intelligent and can utilize control system telemetry for dynamic presentation and impacted content, ie smart alarm management, dynamic control activation, etcetera.

1.02 REFERENCES

A. The latest edition for all codes and standards referenced in this Specification shall be the edition in effect at the time of Contract Award.

B. Industry Standards:

1. International Society of Automation (ISA):

a. ANSI/ISA 101.01-2015 – Human Machine Interface for Process Automation Systems
b. ANSI/ISA 18.2-2016 Management of Alarm Systems for the Process Industry
c. ISA 62443-2-1, Security for Industrial Automation and Control Systems.

C. Related Sections:

1. Section 40 94 24PSS, PSS Human Machine Interface

D. The Supplier has the ultimate responsibility for the complete identification and execution of all applicable codes, standards, and regulations.

E. Unless otherwise stated, these codes, standards or material specifications shall be the latest revisions, including all effective publications, supplements, addenda and editions in effect at the

issuance date of this document.

F. These codes and standards set forth the minimum requirements. These may be exceeded by the Supplier if, in its judgment and with Owner's acceptance, superior or more economical designs or materials are available.

G. The most severe requirements shall prevail in the event of conflict between requirements, specifications and applicable and governing codes. All conflicts among the Codes, specifications and/or purchase order shall be brought to the Owner's attention for written resolution prior to release for fabrication.

H. Violations resulting from stipulations in the existing codes shall be corrected by the Supplier at its own expense.

I. The Supplier shall be responsible for obtaining copies and paying all costs of all applicable codes and regulations.

1.03 DEFINITIONS

A. BOP - Balance of Plant.

B. Drawings: Drawings includes all technical drawings and documents used to define the system(s) and equipment specified herein.

C. Development Environment: Development Environment is isolated from the active PDCS, or more generically described Industrial Control System, as contrasted to the Production Environment which is the active PDCS. The intent is to allow development of control system content separately from the active control system, as is common in industrial control systems.

D. ECS – Electrical Control System.

E. FAT - Factory Acceptance Test.

F. GCS – Grid Control System

G. HMI - human-machine interface; a computer-based operator interface for a control system.

H. Industrial Control System: Generic common name for a control system applied in industrial applications.

I. PAC – Programmable Automation Controller.

J. PCS - Plant Control System.

K. PDCS – Power Distribution Control System.

L. Production Environment: Production Environment is the active PDCS, or more generically described Industrial Control System, as contrasted to the Development Environment which is isolated from the active PDCS. The intent is to allow development of control system content separately from the active control system, as is common in industrial control systems.

M. PLC - Programmable Logic Controller.

N. PSS – Process SCADA System.

O. RMF – Risk Management Framework.

P. RTAC – Real Time Automation Controller.

Q. SAT - Site Acceptance Test.

1.04 SUBMITTALS

A. See Section 40.94.24PSS for Submittal requirements.

1.05 QUALITY ASSURANCE

A. See Section 40.94.24PSS for Quality Assurance requirements.

1.06 WARRANTY AND GUARANTEES

A. See Section 40.94.24PSS for Warranty and Guarantee requirements.

2 PDCS HMI GRAPHIC STANDARDS

2.01 TOPOLOGY

A. The PDCS HMI graphics infrastructure is part of a PDCS superset of purpose- specific subsystems including:

1. PDCS electrical control subsystem (ECS); networked electrical control and protection
2. PDCS human machine interface subsystem (HMI); user interface and associated data management
3. PDCS external device interface subsystem(s) (EDI); interface(s) with external non-PDCS system(s)
4. PDCS grid control subsystem (GCS); SWBNO managed electrical distribution system power delivery to load

balancing

B. Additionally, the PDCS, from a networking structure perspective, is one of four (4) primary physically independent network families:

1. IT network; information technology (IT)
2. Security network; security
3. PSS network; process SCADA system (PSS)
4. PDCS network; Power Distribution Control System (PDCS)

C. The PDCS HMI main-control-room form-factor infrastructure, as defined in Specification Section 40.94.24PDCS, is an AVEVA Operations Control, formerly Wonderware, solution and is implemented at RMF level 3. The AVEVA Operations Control solution 'ecosystem' is comprised of serval modules providing purpose-specific functionality. The AVEVA Operations Control HMI graphics module is able to utilize 'templates' organized into logical groups for efficient content development, leveraged quality control, and user interface consistency – all important aspects and goals of the PDCS HMI graphics.

D. The PDCS HMI equipment-node form-factor infrastructure, as defined in Specification Section 40.94.24 PDCS, is a Schweitzer Engineering Laboratories (SEL) native RTAC HMI solution. The SEL RTAC HMI solution is optimized to the RTAC. The SEL RTAC HMI graphics solution is highly resilient for RMF level 2 resiliency and functionality. The approach and execution of 'template' based HMI graphics methodology is also expected in this form-factor for efficient content development, leveraged quality control, and user interface consistency – all important aspects and goals of the PDCS HMI graphics.

E. The PDCS HMI infrastructure, as defined in Specification Section 40.94.24 PDCS, is resilient via redundant independent instances. The intent of these redundant independent instances is to allow uninterrupted system operation upon any single instance failure. The PDCS HMI graphics implementation is also intended to be physically independent yet administratively harmonized, requiring special attention to pragmatic deployment of HMI graphics from the Development Environment to the Production Environment. The independent PDCS HMI instances point to associated independent PDCS data concentration RTAC(s) versus a common or shared data source. This approach is philosophically consistent with both main-control-room and equipment-node HMI graphics, yet implemented via different HMI graphics solutions.

2.02 STRUCTURE

A. The PDCS HMI graphics are organized hierarchically in Graphic Groups, from general overview graphics content to progressively more specific graphics content, with additional specialty graphics content groups. The PDCS HMI Graphic Groups are organized as follows:

1. Graphic Group 0: overview - whole system
2. Graphic Group 1: overview - geographic location
3. Graphic Group 2: overview - functional group, may be a `logical node'
4. Graphic Group 3: detailed view - logical node / switchgear
5. Graphic Group 4: detailed view - individual circuit / circuit breaker 'faceplate'
6. Graphic Group 5: historical view - preconfigured trend, ad-hoc trends
7. Graphic Group 6: reporting / logging - preconfigured reports, preconfigured logging
8. Graphic Group 7: <TBD as required>
9. Graphic Group 8: <TBD as required>
10. Graphic Group 9: <TBD as required>

B. Basic Guidelines for PDCS HMI Graphic Screen Naming

1. overview – whole system: Graphic Group 0; generally coded as <AREA CODE>_0.0_000.000_00.00; all SWBNO_0.0_000.000_00.00
2. overview – geographic location: Graphic Group 1; generally coded as <AREA CODE>_1.0_000.000_00.00
3. overview – functional group (may be a ‘logical node’): Graphic Group 2; generally coded as <AREA CODE>_2.0_000.000_00.00
4. detailed view – logical node / switchgear: Graphic Group 3; generally coded as <AREA CODE>_3.0_000.000_00.00
5. detailed view – individual circuit / circuit breaker: Graphic Group 4; generally coded as <AREA CODE>_4.0_000.000_00.00

Graphic File Name Guide:

General Format: <AREA CODE>_<HMI GROUP>_<BUS>.<SEQ#>_<REV>.<VER>	
<AREA CODE>	AREA designation used throughout Project
<HMI GROUP>	HMI Group is a somewhat hierarchical grouping of HMI graphics from general to specific.
<BUS>	BUS is the same numeric identifier used in the IP addressing scheme to enumerate electrical buses within a an AREA

<SEQ#>	SEQ# is simply to differentiate one HMI graphic from another within the same AREA GROUP BUS set; where meaningful the CELL (cubicle) number is a good choice
<REV>	REV is a two digit REVision designation allowing different forms of the same graphic to be within the same next higher level set; often when a major change is made to typical graphic layout as contrasted to a VERsion that is only a minor change; where practical the graphics linking is at this level allowing VERsions to be maintained in the 'uncompiled' file and the compiled file only includes the REVision
<VER>	VER is a two digit VERsion designation allowing different forms of the same graphic to be within the same next higher level set; often when a minor change is made to typical graphic layout as contrasted to a REVision that is a major change; where practical the graphics linking is at the NEXT HIGHER <REV> level allowing versions to be maintained in the 'uncompiled' file and the compiled file only includes the REVision

2.03 FORMAT

A. Particular attention shall be given to the format of PDCS HMI graphics emphasizing consistency purposeful layout, as is consistent with many ICS applications! The value of consistent purposeful format of HMI Graphics (leveraging foundational HFE concepts)

B. Basic Format of PDCS HMI Graphics

1. focus zones/panes
2. central focus zone - main
3. right focus zone - navigation hot-keys, user access
4. bottom focus zone - alarm / critical information summary

C. Basic Colors of PDCS HMI Graphics

1. The use of color throughout the HMI should:
   a. Bring attention to the most important information
   b. Be consistent to aid the operator where attention should be focused
   c. Not distract the Operator from the work that is to be performed.

2. Normal operation should adhere to high contrast brightness coding. The following below guide should be followed:
   a. Normal Stopped or Off Condition: Dark Grey
   b. Normal Running or On Condition: White

3. The following colors are reserved for the indicated functions:
    a. Orange: Warning Condition, Warning Alarm, HiHi/Lo Lo Measurement Alarm. Indicates a hazardous situation which, if not avoided could result in death or serious injury.
    b. Yellow: Caution Condition, Caution Alarm, Hi/Low Measurement Alarm. Indicates a hazardous situation which, if not avoided could result in minor or moderate injury.
    c. Red: Danger Condition, Danger Alarm, Emergency Shutdown. Indicates a hazardous situation which, if not avoided could result in death or serious injury.
    d. Blue: Dynamic field measurement, Dynamic text, Status text, Status measurement.
    e. White: Normal Running condition
    f. Dark Grey: Normal Stopped condition.
    g. Black: Static text and labels.

4. Color coding alone to express information should be avoided. Multi-state objects should contain additional textual coding to further indicate state.

5. Deviations from Basic Color scheming shall be subject to review and approved by Owner.

2.04 FUNCTIONALITY

A. PDCS HMI graphics functionality is intended to enhance the graphical presentation of information and promote safe efficient consistent user interface experience. As emphasized elsewhere in this document, the overarching premise of PDCS HMI graphics is the consistent legible graphical presentation of PDCS information for efficient user interaction and execution. A measure of success for achieving this premise is the ability to access desired information and/or control function in, at most, three steps. These objectives require dynamic graphics that are intelligent. Examples include:

1. intelligent purposeful alarm data in summary level graphics
2. dynamic graphics objects conveying a condition based on graphic characteristics

B. Basic graphic functionalities include, but are not limited to:

1. graphic – dynamic vs static
2. text - dynamic vs static
3. navigation
    a. pick area link to associated graphic
    b. 'Previous'

4. hover (aka 'tool tip')
   a. alternate information
5. dynamic control activation
   a. control feature activation or deactivation based on condition(s)
   b. mode selection
6. user input influenced graphics
   a. trend limits
   b. report selection and/or parameter input

2.05 HUMAN FACTOR ENGINEERING

A. Human Factor Engineering (HFE) is the consideration of the physical and cognitive limitations of users. Common human sensory deficiencies (color detection, hearing loss, vision impairments, etc.) should be considered and accommodated for in the PDCS HMI graphics.

B. Common HFE concepts for PDCS HMI design include but not limited to;
   1. Design should be consistent from display to display and should be intuitive to the operator such that situational awareness is enhanced.
   2. Controls and information presented on the HMI graphics should be appropriate to the Task.
   3. The information presented on the HMI graphics should be presented in forms or formats familiar to the operator or appropriate to the user's goals (e.g. if the operator takes field readings in inches, degrees Fahrenheit, or psi, then the HMI presentation should display these formats rather than centimeters, Celsius or bar). Further, terminology used in HMI graphics should be consistent with the operator's common descriptions.

3 TESTING

3.01 TESTING AND INSPECTION - GENERAL

A. See Section 40.94.24PSS for General Testing and Inspection requirements.

B. PDCS HMI graphics are highly subjective and are challenging to standardize visually, however the structure, format, and functionality shall be fully tested and inspected by the Contractor consistent with the various stages of development.

3.02 FACTORY ACCEPTANCE TESTS

A. See Section 40.94.24PSS for Factory Acceptance Testing requirements.

B. PDCS HMI graphics are highly subjective and are challenging to standardize visually, however the structure, format, and functionality shall be fully demonstrated by the Contractor during the Factory Acceptance Testing and is improved by close attention to detail

during the pre-FAT content development.

3.03 SITE ACCEPTANCE TESTING (SAT)

A. See Section 40.94.24PSS for Site Acceptance Testing requirements.

B. PDCS HMI graphics are highly subjective and are challenging to standardize visually, however the structure, format, and functionality shall be fully proven by the Contractor during the Site Acceptance Testing. It should be expected that some PDCS HMI graphic content will need to be updated or corrected as a result of the SAT.

3.04 SUPPLEMENTS

A. The supplements listed below, included following "END OF SECTION," are part of this Supplement.

1. Graphic Group 0 example; <LATER>
2. Graphic Group 1 example; <LATER>
3. Graphic Group 2 example; <LATER>
4. Graphic Group 3 example; <LATER>
5. Graphic Group 4 example; <LATER>
6. Graphic Group 5 example; <LATER>
7. Graphic Group 6 example; <LATER>

END OF SECTION

SECTION 40 94 25
PSS DATA EXCHANGE INTERFACE

PART 1 GENERAL

1.01 SUMMARY

A. This Specification, together with applicable Data Sheets and/or Supplements, covers the technical requirements for the design, materials, equipment, programming, testing services, and construction services required to provide totally functional data exchange interface(s) (DEI) between the Process Supervisory control and data acquisition (PSS) and other control systems required to interface with the PSS to enable the PSS and the interfaced control systems to be fully functional in their intended purpose.

1.02 REFERENCES

A. The latest edition for all codes and standards referenced in this Specification shall be the edition in effect at the time of Contract Award.

B. Industry Standards:

1. International Electrotechnical Commission (IEC):
   a. 60529, Enclosure Protection from Environment.
   b. 61000-4-11, Electromagnetic Compatibility.
   c. 61131, Programmable Controllers.
2. Institute of Electrical and Electronics Engineers (IEEE):
   a. 1050, Generating Station I&C Equipment Grounding.
   b. C37.90.1, Electrical Surge Withstand Capability.
   c. C37.90.2, Radio Frequency Interference.
3. International Society of Automation (ISA):
   a. 71, Environmental Conditions for Process Measurement and Control Systems.
   b. 62443-2-1, Security for Industrial Automation and Control Systems.
   c. ANSI/ISA 12.12.01-2000, Hazardous Location Certification.
4. National Electrical Manufacturers Association (NEMA): NEMA 250, Enclosures for Electrical Equipment.
5. National Fire Prevention Association (NFPA): NFPA 70, National Electrical Code (NEC).
6. UL:
   a. 508, Safety Standard for Industrial Control Equipment.
   b. 840, Electrical Equipment Insulation Coordination.
   c. 1604, UL Certification for Existing Products.

C. Related Sections:

1. Section 01 33 00, Submittal Procedures.
2. Section 40 94 23, PSS Electrical Control System.
3. Section 40 94 24, PSS Human Machine Interface.

D. Key Project Drawings are listed in Supplement KPD – Key Project Drawings (to be provided by Contractor).

1.03 DEFINITIONS

A. BOP: Balance of Plant.

B. Drawings: Include all technical drawings and documents used to define the system(s) and equipment specified herein.

C. ECS: Electrical Control System.

D. FAT: Factory Acceptance Test.

E. HMI: Human-machine interface; a computer-based operator interface for a control system.

F. PAC: Programmable Automation Controller.

G. PCS: Plant Control System.

H. PDCS: Power Distribution Control System.

I. PLC: Programmable Logic Controller.

J. PSS: Process SCADA System

K. SAT: Site Acceptance Test.

1.04 SUBMITTALS

A. Contractor shall provide the following information:

1. Drawing list and submittal schedule.
2. Overall system communications diagram.
3. All standard product literature pertinent to the hardware in their design.
4. Bill of materials (BOM) for all equipment in their design, which shall use actual manufacturer names and part numbers.
5. Installation drawings, instructions, product bulletins, and manuals.
6. Operation and maintenance manuals for all hardware and software.
7. Communication configuration programming documentation.

B. Communication configuration at 75 percent completion for Owner/Engineer review and comment.

C. Input/Output (I/O) list for all I/O required for a fully functional interface. The I/O list shall contain all information required to complete the database. A copy of the database in Microsoft Excel or Access shall be provided to the Owner/Engineer, as well as the final controller program native file.

1.05 QUALITY ASSURANCE

A. The Contractor shall maintain a quality manual/system which meets the requirements of the applicable international quality system standard appropriate to the contracted Scope of Work throughout the duration of this Purchase Order as well as ISO 9000 requirements.

B. The Contractor quality plan shall be issued for review and for monitoring during the Project. Reporting requirements shall include the Owner/Engineer requirements and additional requirements as stated below.

C. Requirements covered by this Purchase Order/Specification shall apply to lower tier Contractors, including Owner/Engineer's access (accompanied by Contractor) to facilities and records.

D. All materials and hardware to be furnished and all Work to be performed under this Specification shall be subject to review, inspection, and testing as described below.

1.06 WARRANTY AND GUARANTEES

A. Furnish Manufacturer's extended guarantee or warranty with Owner named as beneficiary in writing as special guarantee.

B. The Manufacturer shall warrant that the equipment shall be supplied in accordance with these Specifications and shall perform as described herein.

C. The Manufacturer shall warrant that the equipment provided shall be free from defects in materials and workmanship for a period of 12 months after acceptance by Owner.

D. The Manufacturer shall repair or provide a replacement for any defective component under the warranty provided that any such defect was not the result of misuse of the equipment by the Owner or the Owner's representative. The Manufacturer shall be able to provide Owner with training and support service during the first year of operation.

PART 2 PRODUCTS

2.01 EQUIPMENT AND SERVICES TO BE FURNISHED BY CONTRACTOR

A. All communication hardware, software, programming to establish communication interfaces shown on the Data Sheets and Drawings.

B. All fiber optic cable, media converters, patch panels, patch cords, power supplies to support the communication.

C. Configuration of the system based on datalink list developed in the format defined herein and as necessary to provide a fully functional interface to perform the intended purpose. Configuration shall include controller configuration, datalink configuration, communication equipment configuration, software platforms and licensing and all other system configuration required to provide fully operational interface communication links. Configuration shall comply with the requirements of Section 25 05 11, Cybersecurity for Facility Related Control Systems to ensure system resilience against cyber threats.

D. During execution of the Contract, Owner and Engineer shall select the points required for interface communication based on the Data Sheets and Drawings. Contractor shall be responsible for obtaining the detailed data from the interfaced equipment necessary to perform the interface configuration. An allowance for programming and configuration of an additional 100 points or 35 percent of designed point quantity, whichever is less, during actual commissioning.

E. Contractor shall obtain services from demonstrated established experienced, a minimum of 100,000 points and ten projects experience, selected hardware Systems Integrator and Contractor(s) to provide field support to establish interface communication links.

F. All data files and software tools used for setup and programming. Software licenses shall be provided by Contractor to support initial configuration and site commissioning.

G. Integrating, commissioning, and startup of interface equipment, data links, and all related accessories and equipment.

2.02 COMMUNICATIONS

A. All interface data communication shall be managed by the common PSS communications scheme.

B. All interface system communications shall be evaluated against the Risk Management Framework (RMF) and be considered Operational Technology (OT) category RMF Level 1 or 2.

C. Where technologically feasible interface system communications links shall be deterministic and utilize cybersecure methods to ensure system resilience against cyber threats.

D. Any taps, terminators, patch cords, patch panels, fiber optic cable, media converters, configuration and diagnostic software, repeaters, or adapters required for communication design shall be provided by the Contractor.

E. Any Ethernet connections outside buildings or longer than 100 meters shall be via fiber optic cable. The Contractor shall provide all required fiber optic patch panel and patch cables as required with the equipment.

F. All dynamic data communications rates shall be sufficient to support safe reliable control and supervision holistically applied to both the interfaced equipment and the PDCS.

2.03 HUMAN MACHINE INTERFACE

A. The Human Machine Interface (HMI) requirements are specified in Section 40 94 24, PSS HMI Specification.

B. Coordination between the PSS Interface design and the PSS HMI design shall ensure sufficient interface capabilities are supplied to support the PSS HMI design.

2.04 CONFIGURATION SOFTWARE

A. Contractor shall provide and configure the interface equipment with Contractor necessary software. Any other software specifically required for programming of interfaces shall be supplied by Contractor.

B. Software licensing shall be planned and structured such that the Owner shall not incur additional costs, beyond those of the Contract cost, necessary to operate and maintain the permanent installation after turnover from Contractor. All Project specific software licensing for the benefit of the Project shall be in the Owner’s name and remanded to the Owner upon turnover of the Project.

2.05 SPARE PARTS

A. Spare parts and special tools required for one year of operation shall be provided per manufacturer’s recommendations. Contractor shall submit list of these spare parts and special tools.

B. Spare parts and special tools for construction, commissioning, and startup shall be included. Any such parts used during construction or startup shall be replaced.

C. Spare parts and special tools are to be packaged separately from the equipment and shipped along with the equipment. A tag shall be attached to each part showing equipment tag number, part name or description, Drawing reference, and part item number.

D. All spare parts and special tools shall be supplied new and unused.

E. Contractor shall submit a list of recommended spare parts for long-term, reliable operation including pricing. Pricing shall be valid until Project closeout and acceptance.

2.06 EQUIPMENT IDENTIFICATION

A. Equipment identification shall comply with Section 01 58 53, Project Equipment Identification, as well as any additional identification requirements listed in this article.

B. White engraved nameplates with black letters on cabinets and devices. As a minimum and per the Drawings, name plates shall indicate:

1. Tag Number.
2. Circuit Number (where applicable).
3. Name.
4. Reference document number.

C. This article is included more to inform the DEI development process with Project standardized tagging and continue the Project standardized tagging within the DEI "programmed" infrastructure.

PART 3 EXECUTION

3.01 SOURCE QUALITY CONTROL

A. Testing and Inspection:

1. The Owner/Engineer reserves the right to witness all tests and shall be notified at least 21 days in advance of the tests.
2. The communication software shall be subject to Owner/Engineer witnessed factory and Site acceptance tests. The software shall not be shipped from the place of configuration until the factory acceptance tests have been deemed to have been passed by the Owner/Engineer.
3. For testing of the communication links between the PDCS and any existing general or purpose-based control or data interface systems, Contractor can use emulator software to demonstrate the successful communication.

B. An Inspection and Test Plan (ITP) shall be provided that identifies the inspections and tests to be performed during manufacture. Based on this ITP the Owner or his representatives may elect to witness shop testing. Notify Owner 3 weeks (or as otherwise specified) prior to testing.

3.02 MANUFACTURER'S SERVICES

A. Provide manufacturer's services.

B. Site Acceptance Testing (SAT):

1. Site Acceptance Testing (SAT): 6 days, three trips.
2. Initial Power-Up and Functional Verification: Upon completion of PLC communication links installation at the Project Site, the Contractor shall conduct the initial power-up and on-site system diagnostic and functional tests to verify system functionality and make the system operational.
3. Communication and Operation Verification: After the system is installed at Project Site and made operational, the Contractor shall exercise all hardware, communication links, software, and configuration programs to ensure proper operation and prove compliance with the Specifications.
4. The Contractor shall supply all special tools or special equipment for erection and commissioning of the communication links.
5. Contractor shall submit a SAT procedure 30 days in advance of the SAT for review and approval.
6. Minimum Items to be tested during SAT:
    a. Demonstration of all interconnections and communication between interfaced equipment and the PDCS.
    b. Demonstration of power/fail restart.
    c. Demonstrating operation of the application software.
    d. Demonstrating of all displays, logs, reports, and operator/user procedures associated with the interface under test.
    e. Demonstrate the interface system to be fully integrated into the PDCS, including hardware and software.

3.03 SUPPLEMENTS

A. The supplements listed below, included following “End of Section,” are part of this Specification.

1. Key Project Drawings List.
2. Data Exchange Table Example Format.
3. PSS Interface Data Sheet(s).
4. Modbus TCP Interface Example.

END OF SECTION

INTENTIONALLY LEFT BLANK

KEY PROJECT DRAWING LIST

To Be Provided by Contractor

INTENTIONALLY LEFT BLANK

DATA EXCHANGE TABLE
Example Format

PLC to PLC communication and Data Exchange Table format example.

1) Messages shall be transferred between PLCs over the Ethernet networks. Message transfer shall utilize CIP Data Table Reads only. No CIP Data Table Writes shall be used.
2) Two each source data tables shall be generated in each controller:
    a. One data table shall be an array of 50 DINT's for transferring Integers and Boolean data.
    b. One data table shall be an array of 50 REAL's for transferring floating point data.
3) The array tags shall be controller scoped tags.
4) The tags for each of the source tables shall have the following form.
    a. DINT – *SourcePLC_TypeNumber*
        i. Example – SrcPLC41_DINTn01
    b. REAL – *SourcePLC_TypeNumber*
        i. Example – SrcPLC41_REALn01
5) Each Array shall contain a minimum of 20% spare space at program completion; if any array is 80% filled then the next numerical array shall be created until all tags to be exchanged are allotted.
6) The first word of each array shall be reserved for a passive watchdog value. This watchdog shall be a constantly changing value, either the second timer from the PLC or some independently generated value. The receiving PLC shall evaluate the watchdog value contained in the first word of each table, and shall the value have not changed in a set time (three times the messaging scan time) then the reading PLC can be programmed to act appropriately and generate a communications alarm. Two PLC watchdog timer and communications fail alarm examples are attached for Contractor reference.
7) Data shall be packed and unpacked into the generic transfer tags utilizing structured text in the processor. The structured text file shall contain comments on each line documenting the information passed in each tag. Refer to the following figures for examples.

Packing Data into Message Transfer Tags

```
(* Message Transfer Source Tag *)

(*************************************************************************************************************************)
(* BOOL and INTEGER *)
(* Packed BOOL *)

SrcPAC41_DINTn01[0] := pxxxPACxx41xn01;      (* Watchdog Timer, varies by second, 0-59 seconds *)

SrcPAC41_DINTn01[1].0 := p02xPALx202xn02;    (* Pressure Alarm High, Pump 02202 Sludge Discharge, False = Alarm *)
SrcPAC41_DINTn01[1].1 := p02xPALx203xn01;    (* Pressure Alarm High, Pump 02203 Sludge Discharge, False = Alarm *)
(* Continue with Pattern *)

(* Packed INTEGER *)

SrcPAC41_DINTn01[5] := p01xFQIx001xn1;       (* Headworks Influent Distribution Channel, Total Today, MGD *)
(* Continue with Pattern *)


(*************************************************************************************************************************)
(* Packed REAL *)

SrcPAC41_REALn01[0] := pxxxPACxx41xn01;      (* Watchdog Timer, varies by second, 0-59 seconds *)
SrcPAC41_REALn01[1] := h01xAITx311xn1sPV;    (* Headworks Influent Distribution Channel Methane Concentration, Span 0-10 mg/l *)
```

Unpacking Data from Message Transfer Tags to Controller Tags

```
(* Message Transfer to Target Tag *)

(*************************************************************************************************************************)
(* BOOL and INTEGER *)
(* Packed BOOL *)

pxxxPACxxx5xn02 := TgtPAC5_DINTn01[0];       (* Watchdog Timer, varies by second, 0-59 seconds *)

p02xPALx206xn02 := TgtPAC5_DINTn01[1].0;     (* Pressure Alarm High, Pump 02206 Sludge Discharge, False = Alarm *)
p02xPALx206xn01 := TgtPAC5_DINTn01[1].1;     (* Pressure Alarm High, Pump 02206 Sludge Discharge, False = Alarm *)
(* Continue with Pattern *)

(* Packed INTEGER *)

p01xFQITx001xn1 := TgtPAC5_DINTn01[5];       (* Headworks Influent Distribution Channel, Total Today, MGD *)
(* Continue with Pattern *)


(*************************************************************************************************************************)
(* Packed REAL *)
pxxxPACxxx5xn03 := TgtPAC5_REALn01[0];       (* Watchdog Timer, varies by second, 0-59 seconds *)

h01xAITx312xn1sPV := TgtPAC5_REALn01[1];     (* Headworks Influent Distribution Channel Methane Concentration, Span 0-10 mg/l *)
```

4. Data Exchange List Development Procedure

The following procedure shall be followed to finalize the data exchange list.

1. A spreadsheet containing the source tag names and array dimension shall be issued by the PLC code developer in both printed and electronic format.

2. The spreadsheet shall contain the following information:

    a. Source tag name and element in the array.
    b. Description for the point associated with the source tag name.
    c. Minimum value for integer or floats, False state for Booleans
    d. Engineering units for integer or floats
    e. Comments as appropriate for clarification of data transferred.

5. PLC Watchdog Timer and Communication Fail Alarm Example 1.

This example does not use specific tag naming standards, but has been presented here to illustrate the specified concept.

In this example PLC25_1 is generating a PLC Watchdog Value from a timer that automatically resets and restarts. The Watchdog Value Tag PLC25_1_0725_01_CK_WV is placed in the first element of the array where another PLC has access to read the Watchdog Value.

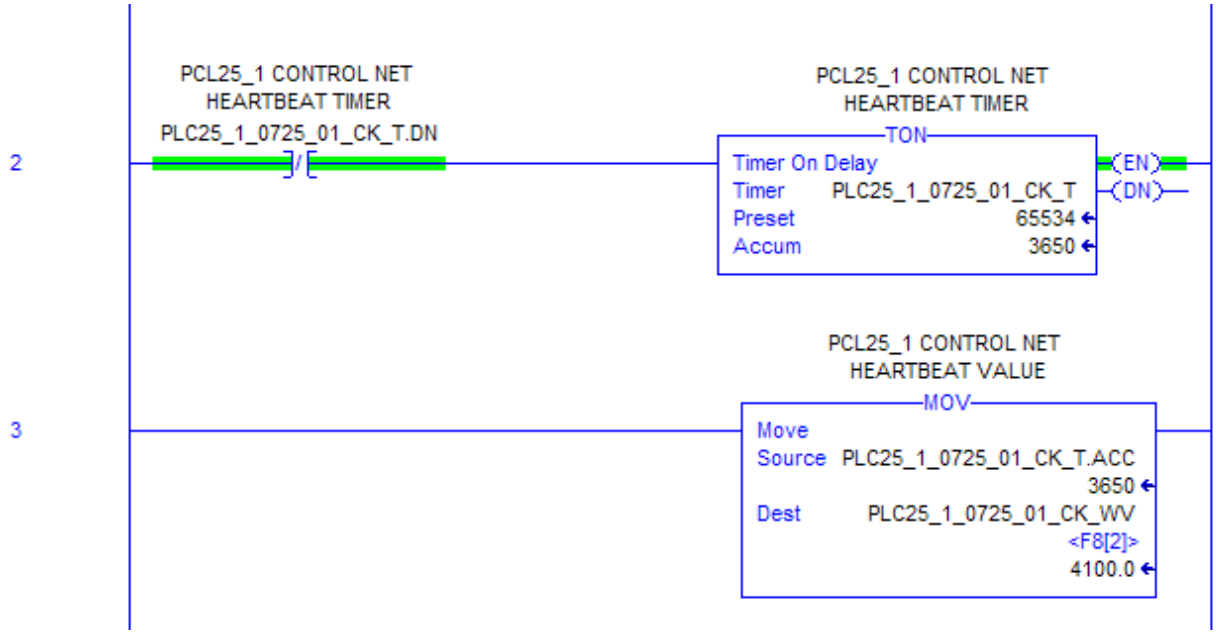

6. PLC Watchdog Timer and Communication Fail Alarm Example 2.

In this example PLC25_1 is reading the PLC15_1 Watchdog Value and starting a timer to determine a communication failure with PLC15_1.

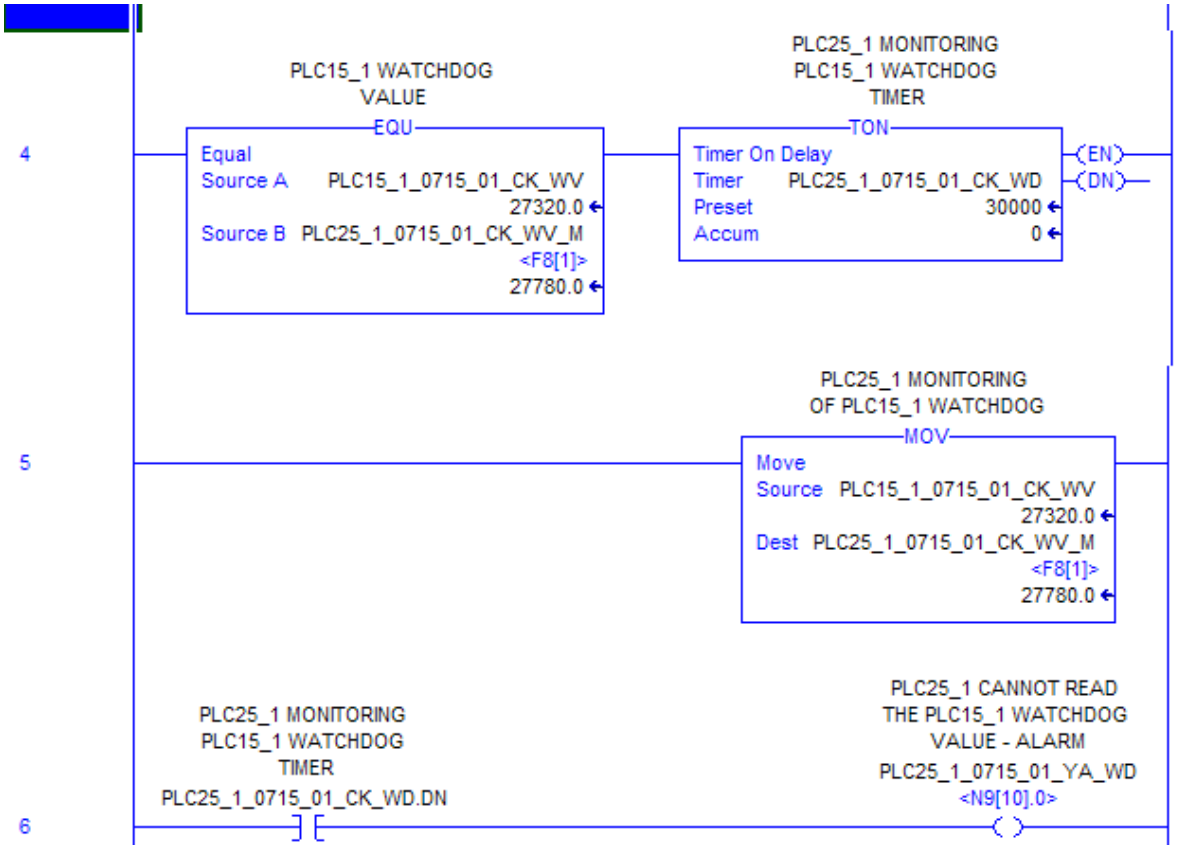

The compared value is the last known value of the Watchdog Value received from PLC15_1 (rung 5).

Rung 6 shows the communication alarm when PLC25_1 does not receive an updated Watchdog Value in the maximum time, as specified by the timer in Rung 4. On a communication alarm, the user program shall alarm on the HMI and take appropriate action, based on the process, to protect personnel, equipment and the environment

PSS INTERFACE DATA SHEET

To be Provided by Contractor

INTENTIONALLY LEFT BLANK

MODBUS TCP
Interface Example

PLC to PLC communication over Modbus TCP example:

A. All communication utilizing Modbus shall be done over Modbus TCP, on the Ethernet network.

B. A watchdog timer shall be provided on each Modbus device as a method to detect a communications fault. Watchdog implementation is described in Supplement #2 Data Exchange Table Example Format.

C. Modbus Memory Map Development Procedure

1. A Modbus memory map shall be provided by the Contractor of each piece of equipment intended to communicate over Modbus TCP. This memory map shall include descriptions of each coil and holding register that is accessible by Modbus on the controller.

2. The memory map shall list the following for each entry:

    a. Memory register(s) used (with register bit for discrete input values)
    b. Access type (read/write)
    c. Data type (Boolean, 32-bit float, etc)
    d. Controller tag name
    e. Controller tag description
    f. Default value (if applicable)
    g. Min of normal range
    h. Max of normal range
    i. Engineering unit
    j. Resolution of each entry (if applicable)
    k. Active State (if applicable)
    l. Device tag name (if applicable)
    m. Comments as appropriate for clarification of data transferred.

3. The PLC Code Developer shall incorporate the Modbus memory map into the processor by creating controller scoped tags for each value and implementing these tags into the logic as required for complete system functionality.

D. Example of discrete input memory map:

Modbus Holding Register	Access		Solar Tag Name	Solar Tag Description	Eu Min	Eu Max	Eu	Device Tag Name
40401, 40402	Read	32-bit IEEE Float	AN_OSM_Speed	[SAFETY CRITICAL] Backup Overspeed Monitor Speed	0	120	%	BUOSM
40403, 40404	Read	32-bit IEEE Float	AN_OSM_STest_Delta	Backup Overspeed Monitor System Test Speed Delta	-120	120	%	
40405, 40406	Read	32-bit IEEE Float	AN_OSM_STest_Req_Time	Time Until Backup Overspeed Monitor System Test is Required	0	8000	h	
40407, 40408	Read	32-bit IEEE Float	AN_OSM_Trip_SP	[SAFETY CRITICAL] Expected Backup Overspeed Monitor Trip Set Point	115	115	%	
40409, 40410	Read	32-bit IEEE Float	AN_OSM_Trip_Speed	Calculated Backup Overspeed Monitor Trip Speed	0	120	%	
40411, 40412	Read	32-bit IEEE Float	AN_Supervisor_P1_Last_Node	EN2TR Supervisor Last Node Recognized on Port 1	0	255	None	
40413, 40414	Read	32-bit IEEE Float	AN_Supervisor_P2_Last_Node	EN2TR Supervisor Last Node Recognized on Port 2	0	255	None	
40415, 40416	Read	32-bit IEEE Float	AN_PS_UJ0131_In_Voltage	Power Supply Input Voltage	0	375	Vdc	UJ0131_VIN
40417, 40418	Read	32-bit IEEE Float	AN_PS_UJ0131_Supply_Current	Power Supply Output Current (DC)	0	45	A	UJ0131_IOUT
40419, 40420	Read	32-bit IEEE Float	AN_Supply_Voltage_24Vdc	Control System 24 Vdc Supply Voltage	0	40	Vdc	SENSE_24VDC
40421, 40422	Read	32-bit IEEE Float	AN_Turb_Air_Inlet_DP	Turbine Air Inlet DP	0	15	inH2O	PDT1110
40423, 40424	Read	32-bit IEEE Float	AN_Turb_Air_Inlet_Filter_DP	Turbine Air Inlet Filter DP	0	10	inH2O	PDT6310
40425, 40426	Read	32-bit IEEE Float	AN_DTG6561_Gas_LEL	#1 Turbine Enclosure Inlet Combustible Gas Sensor LEL	0	100	% LEL	
40427, 40428	Read	32-bit IEEE Float	AN_DTG6571_Gas_LEL	#1 Fuel Area Combustible Gas Sensor LEL	0	100	% LEL	
40429, 40430	Read	32-bit IEEE Float	AN_DTG6572_Gas_LEL	#2 Fuel Area Combustible Gas Sensor LEL	0	100	% LEL	
40431, 40432	Read	32-bit IEEE Float	AN_DTG6581_Gas_LEL	#1 Turbine Enclosure Exhaust Combustible Gas Sensor LEL	0	100	% LEL	

E. Example of holding register memory map:

Modbus Holding Register	Access		Solar Tag Name	Solar Tag Description	Active State
40001	Read	Bit 0 - LSB	AL_AF0050_Ch0_Overload	Node 5 Module 0 Discrete Output Channel 0 Overload Fault	1
	Read	Bit 1	AL_AF0050_Ch1_Overload	Node 5 Module 0 Discrete Output Channel 1 Overload Fault	1
	Read	Bit 2	AL_AF0050_Ch2_Overload	Node 5 Module 0 Discrete Output Channel 2 Overload Fault	1
	Read	Bit 3	AL_AF0050_Ch3_Overload	Node 5 Module 0 Discrete Output Channel 3 Overload Fault	1
	Read	Bit 4	AL_AF0050_Ch4_Overload	Node 5 Module 0 Discrete Output Channel 4 Overload Fault	1
	Read	Bit 5	AL_AF0050_Ch5_Overload	Node 5 Module 0 Discrete Output Channel 5 Overload Fault	1
	Read	Bit 6	AL_AF0050_Ch6_Overload	Node 5 Module 0 Discrete Output Channel 6 Overload Fault	1
	Read	Bit 7	AL_AF0050_Ch7_Overload	Node 5 Module 0 Discrete Output Channel 7 Overload Fault	1
	Read	Bit 8	AL_AF0051_Ch0_Overload	Node 5 Module 1 Discrete Output Channel 0 Overload Fault	1
	Read	Bit 9	AL_AF0051_Ch1_Overload	Node 5 Module 1 Discrete Output Channel 1 Overload Fault	1
	Read	Bit 10	AL_AF0051_Ch2_Overload	Node 5 Module 1 Discrete Output Channel 2 Overload Fault	1
	Read	Bit 11	AL_AF0051_Ch3_Overload	Node 5 Module 1 Discrete Output Channel 3 Overload Fault	1
	Read	Bit 12	AL_AF0051_Ch4_Overload	Node 5 Module 1 Discrete Output Channel 4 Overload Fault	1
	Read	Bit 13	AL_AF0051_Ch5_Overload	Node 5 Module 1 Discrete Output Channel 5 Overload Fault	1
	Read	Bit 14	AL_AF0051_Ch6_Overload	Node 5 Module 1 Discrete Output Channel 6 Overload Fault	1
	Read	Bit 15 - MSB	AL_AF0051_Ch7_Overload	Node 5 Module 1 Discrete Output Channel 7 Overload Fault	1

Modbus Holding Register	Access		Solar Tag Name	Solar Tag Description	Eu Min	Eu Max	Eu	Device Tag Name
40201, 40202	Write	32-bit IEEE Float	CSP_kVAR	Generator Reactive Power Set Point from Customer Terminal	-12500	33800	kVAR	
40203, 40204	Write	32-bit IEEE Float	CSP_kW	Generator Real Power Set Point from Customer Terminal	900	99999	kW	
40205, 40206	Write	32-bit IEEE Float	CSP_PF	Generator Power Factor Set Point from Customer Terminal	-1	1	None	
40207, 40208	Write	32-bit IEEE Float	CSP_Speed	Speed Set Point from Customer Terminal	96.5	103.5	%	
40209, 40210	Write	32-bit IEEE Float	CSP_Voltage	Generator Voltage Set Point from Customer Terminal	12420	15180	Vac	

1. Example of coil memory map:

Modbus Coil Number	Access		Solar Tag Name	Solar Tag Description	Active State
1	Write		CC_Acknowledge	Acknowledge	1
2	Write		CC_Auto_Sync_Init	Auto Synchronize Initiate Command	1
3	Write		CC_Bus_Volt_Trim_Disable	Bus Voltage Trim Disable	1
4	Write		CC_Bus_Volt_Trim_Enable	Bus Voltage Trim Enable	1
5	Write		CC_CSP_Track_Disable	Customer Set Point Tracking Disable Command from Customer Terminal	1
6	Write		CC_CSP_Track_Enable	Customer Set Point Tracking Enable Command from Customer Terminal	1
7	Write		CC_Customer_Disable	Customer Control Disable command from the Customer Terminal	1
8	Write		CC_Encl_Exhaust_Fan_1_Select	Select Enclosure Exhaust Vent Fan 1	1
9	Write		CC_Encl_Exhaust_Fan_2_Select	Select Enclosure Exhaust Fan 2	1
10	Write		CC_Encl_Vent_Fan_1_Select	Select Enclosure Vent Fan 1	1
11	Write		CC_Encl_Vent_Fan_2_Select	Select Enclosure Vent Fan 2	1
12	Write		CC_Fast_Stop_With_Slow_Roll	Fast Stop With Slow Roll Command From Customer Terminal	1
13	Write		CC_Fuel_Gas_Select	Select Gas Fuel	1

SECTION 40 95 33
PROCESS CONTROL NETWORKS

PART 1 GENERAL

1.01 RELATED DOCUMENTS

A. Drawings and general provisions of the Contract, including General and Supplementary Conditions and Division 01 Specification sections, apply to this section.

B. Section 01 88 15, Anchorage and Bracing and Section 01 45 36, Equipment Seismic Certification. These two specifications are highest in priority in case of any conflicting requirements.

1.02 SUMMARY

A. Section Includes:

1. 19-inch equipment racks.
2. 19-inch freestanding equipment cabinets.
3. Power strips.
4. Grounding.
5. Labeling.

1.03 DEFINITIONS

A. Access Provider: An operator that provides a circuit path or facility between the service provider and user. An access provider can also be a service provider.

B. BICSI: Building Industry Consulting Service International.

C. LAN: Local area network.

D. RCDD: Registered communications distribution designer.

E. Service Provider: The operator of a telecommunications transmission service delivered through access provider facilities.

F. SBB: Secondary bus bar.

G. PBB: Primary bonding bus bar.

1.04 ACTION SUBMITTALS

A. Product Data: For each type of product.

1. Include construction details, material descriptions, dimensions of individual components and profiles, and finishes for equipment racks and cabinets.
2. Include rated capacities, operating characteristics, electrical characteristics, certifications, standards compliance, and furnished specialties and accessories.

B. Shop Drawings: For communications racks, frames, and enclosures. Include plans, elevations, sections, details, and attachments to other work.

1. Detail equipment assemblies and indicate dimensions, weights, loads, required clearances, method of field assembly, components, and location and size of each field connection.
2. Equipment Racks and Cabinets: Include workspace requirements and access for cable connections.
3. Grounding: Indicate location of SBB and its mounting detail showing standoff insulators and wall-mounting brackets.

1.05 INFORMATIONAL SUBMITTALS

A. Qualification Data: For Installer**,** qualified layout technician, installation supervisor, and field inspector.

B. Seismic Qualification Data: Certificates, from manufacturer.

1. Basis for Certification: Indicate whether withstand certification is based on actual test of assembled components or on calculation.
2. Dimensioned Outline Drawings of Equipment Unit: Identify center of gravity and locate and describe mounting and anchorage provisions. Base certification on the maximum number of components capable of being mounted in each rack type. Identify components on which certification is based.
3. Detailed description of equipment anchorage devices on which the certification is based and their installation requirements.

1.06 QUALITY ASSURANCE

A. Installer Qualifications: Contractor shall have personnel certified by BICSI on staff.

1. Layout Responsibility: Preparation of Shop Drawings shall be under direct supervision of a current credentialed BICSI RCDD or BICSI Technician.

2. Installation Supervision: Installation shall be under direct supervision of a current credentialed BICSI Technician or Installer 2, Copper or Fiber, who shall be present at all times when Work of this Section is performed at Project site.
3. Field Inspector: Currently registered by BICSI as RCDD or Technician to perform on-site inspection.

PART 2 PRODUCTS

2.01 PERFORMANCE REQUIREMENTS

A. Delegated Foundation Anchorage Design:

1. Design foundation anchorage for cabinet and all associated equipment. Anchorage design shall be in accordance with all applicable codes and standards as listed on the Project Drawings.
2. Loading criteria shall include all applicable gravity, lateral, seismic and equipment operating loads. Delegated engineer shall coordinate as required with equipment manufacturer to determine applicable loading.
3. Anchorage layout and design shall be based on final approved equipment Shop Drawings and shall consider foundation size, thickness and edge distances as shown on the Project Drawings.
4. Submit design calculations and Drawings for anchorage signed and sealed by a professional engineer registered in Louisiana for review and approval prior to installation.
5. Submit Drawings for review and approval prior to installation. Drawings shall show all information required to complete installation of equipment anchorage, including but not limited to anchor rod diameter, material, embedment depth, and layout.
6. Related Requirements Section 01 88 15, Anchorage and Bracing and Section 01 45 36, Equipment Seismic Certification. These two specifications are highest in priority in case of any conflicting requirements.

B. UL listed.

C. RoHS compliant.

2.02 19-INCH EQUIPMENT RACKS

A. Description: Two and four-post racks with threaded rails designed for mounting telecommunications equipment. Width is compatible with EIA/ECIA 310-E, 19-inch equipment mounting.

B. General Requirements:

1. Frames: Modular units designed for telecommunications terminal support and coordinated with dimensions of units to be supported.

2. Material: Sheet steel.
3. Finish: Manufacturer's standard, baked-polyester powder coat.
4. Color: Black.

C. Floor-Mounted Racks:

1. Overall Height: As indicated on the Drawings
2. Overall Depth: As indicated on the Drawings.
3. Upright Depth: As indicated on the Drawings.
4. Four-Post Load Rating: 2000 pound.
5. Number of Rack Units per Rack: As indicated on the Drawings.
   a. Numbering: Every rack unit, on interior of rack.
6. Threads: Universal square.
7. Vertical and horizontal cable management channels, top and bottom cable troughs, grounding lug, and a power strip.
8. Base shall have a minimum of four mounting holes for permanent attachment to floor.
9. Top shall have provisions for attaching to cable tray or ceiling.
10. Self-leveling.

D. Accessories:

1. Cisco Software Defined Network Switch and necessary SFP transceivers (provided by Contractor) and (approved by Owner)
2. Rack Server:Lenovo Think System SR630 V3 Server (Specifications to be approved by Owner) including Virtualization Hypervisor licensing shall be supplied by Contractor
3. Firewall: Palto Alto 1420 including necessary SFP transceivers provided by Contractor.
4. Power Distribution Unit.
5. CAT6A Patch Panel.
6. FIS Swing-out Enclosure 24-port 19-inch Fiber Optic Termination Tray.
7. FIS Swing-out Enclosure 16-port 19-inch Fiber Optic Termination Tray.
8. FIS Swing-out Enclosure 12-port 19-inch Fiber Optic Termination Tray.

E. Cable Management:

1. Metal, with integral wire retaining fingers.
2. Baked-polyester powder coat finish.
3. Vertical cable management panels shall have front and rear channels, with covers.
4. Provide horizontal crossover cable manager at the top of each relay rack, with a minimum height of two rack units each.

2.03 19-INCH EQUIPMENT CABINETS

A. Description: Manufacturer-assembled four-post frame enclosed by side and top panels and front and rear doors, divided in four sections designed for

mounting telecommunications equipment. Width is compatible with EIA/ECIA 310-E, 19-inch equipment mounting.

B. Manufacturer: EXM Manufacturing or Owner Approved Equal.

C. General Cabinet Requirements:

1. Modular units designed for telecommunications terminal support and coordinated with dimensions of units to be supported.
2. Material: Cold Rolled A1008 CS Type B.
3. Finish: Manufacturer's standard, baked-polyester powder coat.
4. Color: Black.
5. Four vertical sections with unique lock and key each.
6. Aluminum name plates: 1-inch by 4-inch.

D. Modular Freestanding Cabinets:

1. Overall Height: As indicated on the Drawings.
2. Overall Depth: As indicated on the Drawings.
3. Load Rating: 3000 pound.
4. Number of Rack Units: As indicated on the Drawings.
   a. Numbering: Every rack unit, on interior of rack.
5. Threads: Universal square.
6. Removable and lockable side and top panels.
7. Hinged and lockable front and rear doors.
8. Adjustable feet for leveling.
9. Screened ventilation openings in roof, base, right side and rear door.
10. Cable access provisions in roof , base and rear door.
11. RBB.
12. Power strip.
13. Four equal, vertical, cabinet sections.
14. All cabinet and sections with unique lock and key.
15. Fixed angle castors with mechanical lock brake.
16. Aluminum channel for castors: 3 inch by 1 inch.

E. Cable Management:

1. Metal, with integral wire retaining fingers.
2. Baked-polyester powder coat finish.
3. Vertical cable management panels shall have front and rear channels, with covers.
4. Provide horizontal crossover cable manager at top of each relay rack, with a minimum height of two rack units each.

F. Touch-Up Paint: Contractor is responsible for touch-up paint for any damaged areas during installation.

2.04 POWER STRIPS

A. Power Strips: Comply with UL 1363.

1. Listed and labeled as defined in NFPA 70, by a qualified testing agency, and marked for intended location and application.
2. Rack mounting.
3. One (20-A, 120V ac, NEMA L5-30, Configuration 5-120R), Five (20-A, 120V ac, NEMA L5-20, Configuration 5-20R) receptacles.
4. LED indicator lights for power and protection status.
5. LED indicator lights for reverse polarity and open outlet ground.
6. Circuit Breaker and Thermal Fusing: When protection is lost, circuit opens and cannot be reset.
7. Circuit Breaker and Thermal Fusing: Unit continues to supply power if protection is lost.
8. Cord connected with 15-foot line cord.
9. Rocker-type on-off switch, illuminated when in on position.
10. Protection modes shall be line to neutral, line to ground, and neutral to ground. UL 1449 clamping voltage for all three modes shall be not more than 240 V.

2.05 GROUNDING

A. Rack and Cabinet SBBs: Rectangular bars of hard-drawn solid copper, accepting conductors ranging from No. 14 to No. 2/0 AWG, NRTL listed as complying with UL 467, and complying with TIA-606-B. Predrilling shall be with holes for use with lugs specified in this section.

1. Cabinet-Mounted SBB: Terminal block, with stainless-steel or copper-plated hardware for attachment to cabinet.
2. Rack-Mounted Horizontal SBB: Designed for mounting in 19- or 23-inch equipment racks. Include a copper splice bar for transitioning to an adjoining rack, and stainless-steel or copper-plated hardware for attachment to the rack.
3. Rack-Mounted Vertical SBB: 72 or 36 inches long, with stainless-steel or copper-plated hardware for attachment to rack.

2.06 LABELING

A. Comply with TIA-606-C and UL 969 for a system of labeling materials, including label stocks, laminating adhesives, and inks used by label printers.

PART 3 EXECUTION

3.01 INSTALLATION

A. Comply with NECA 1.

B. Comply with BICSI TDMM for layout of communications equipment spaces.

C. Comply with BICSI ITSIMM for installation of communications equipment spaces.

D. Bundle, lace, and train conductors and cables to terminal points without exceeding manufacturer's limitations on bending radii. Install lacing bars and distribution spools.

E. Coordinate layout and installation of communications equipment in racks and room. Coordinate service entrance configuration with service provider.

1. Meet jointly with system providers, equipment suppliers, and Owner to exchange information and agree on details of equipment configurations and installation interfaces.
2. Record agreements reached in meetings and distribute them to other participants.
3. Adjust configurations and locations of distribution frames, cross-connects, and patch panels in equipment spaces to accommodate and optimize configuration and space requirements of telecommunications equipment.
4. Adjust configurations and locations of equipment with distribution frames, cross-connects, and patch panels of cabling systems of other communications, electronic safety and security, and related systems that share space in equipment room.

F. Coordinate location of power raceways and receptacles with locations of communications equipment requiring electrical power to operate.

3.02 GROUNDING

A. Comply with NECA/BICSI TIA-607-D AND TIA-607-D-1.

B. Install grounding according to BICSI ITSIMM, "Bonding, Grounding (Earthing) and Electrical Protection" Ch.

C. Locate SBB to minimize length of bonding conductors. Fasten to wall, allowing at least 2 inches of clearance behind SBB. Connect SBB with a minimum No. 4 AWG grounding electrode conductor from SBB to suitable electrical building ground. Connect rack SBB to near SBB or the PBB.

1. Bond the shield of shielded cable to patch panel, and bond patch panel to SBBB or PBB.

END OF SECTION

INTENTIONALLY LEFT BLANK

SECTION 48 00 10
MECHANICAL SUMMARY OF WORK

PART 1 SCOPE OF WORK

1.01 MECHANICAL

A. The West Power Complex (WPC) Group 3 Project is a portion of the overall WPC Project, which includes Contract 1444, Fuel Oil Delivery System. The mechanical scope of work (the "Work") consists of the installation and interconnection of the fuel oil distribution systems to the fuel oil day tank, bulk storage tanks, and the conveyance piping between C7 Basin and CTG-7-day tank and between the C7 Basin and the bulk fuel oil storage tanks. Portions of the conveyance piping is double walled with a leak detection system that shall be integrated into the existing plant infrastructure. The scope includes supply and installation of two fuel oil pump skids: (1) the fuel oil forwarding pump skid to be installed at the bulk fuel oil tanks, and (2) the fuel oil return pump skid to be installed at the fuel oil day tank in the C7 Basin.

B. Contractor shall design, supply, and install all components required for the installation of the fuel oil delivery system, including, but not limited to, the following items:

1. Fuel oil system including, but not limited to, fuel oil return pump skid, above ground piping and valves and connecting to fuel oil storage day tank in the C7 basin.
2. Fuel oil forwarding system from existing Fuel Oil bulk storage tanks to interconnecting piping installed in C7 Basin. This includes, but is not limited to, new fuel oil forwarding pump skid and aboveground and underground piping and valves.

1.02 MECHANICAL SYSTEMS

A. The Mechanical Systems equipment to be procured for the fuel oil system includes the pump skids, external valves and piping, and equipment as specified in these contract documents.

B. The scope of this package includes the installation of all fuel oil equipment including, but not limited to, procurement, receiving, unloading, and setting the pump skids, and the installation of all its associated piping, valves, and instrumentation.

C. The equipment supplied under the Work is to be designed for all-weather access to operate and maintain the equipment in the extreme site operating conditions identified in Section 01 61 00, Common Product Requirements. The systems shall be able to operate reliably during extreme weather, such as hurricane, events for life critical SWBNO municipal system operation.

D. The equipment shall be installed on a new and/or concrete foundation(s) (by others) in an arrangement that facilitates coordination and integration with existing and future utilities.

E. Related Sections:

1. Section 01 33 00, Submittal Procedures.
2. Section 01 43 33, Manufacturer's Field Services.
3. Section 01 61 00, Common Product Requirements.
4. Section 01 73 20, Mechanical Equipment Installation.
5. Section 01 91 14, Equipment Testing and Facility Startup.
6. Section 15 34 42, Underground Piping.
7. Section 23 12 13, Fuel Oil Transfer Equipment.
8. Section 23 13 13 33, Fuel Oil Forwarding Pump Skid.
9. Section 40 50 20, Aboveground Power Plant Piping.
10. Section 40 55 00, Power Plant Valves.
9. Section 48 50 90, Cathodic Protection System.
11. Section 48 58 68, Welding of Power Plant Piping.

1.03 SUBMITTALS

A. Refer to each specific related section above for submittal requirements.

PART 2 PRODUCTS (NOT USED)

PART 3 EXECUTION

3.01 GENERAL

A. The Contractor shall be responsible for supply and installation of the equipment and piping systems.

A. The Contractor shall be responsible for testing and commissioning of the fuel oil distribution systems.

END OF SECTION

INTENTIONALLY LEFT BLANK

SECTION 48 50 90
CATHODIC PROTECTION

PART 1 GENERAL

1.01 RELATED DOCUMENTS

A. Drawings and general provisions of the Contract, including General and Supplementary Conditions and other Division 01, General Requirements Specification sections, apply to this section.

1.02 SUMMARY

A. These Specifications describe the requirements for a corrosion study assessment and cathodic protection (CP) system designed to mitigate corrosion activity on underground piping and buried structures. The cathodic protection system shall be the sacrificial anode type or impressed current system as determined appropriate for the site conditions.

B. The scope of work for the Contractor described herein includes assessment of the cathodic protection needs of the site, design of cathodic protection system, supply of equipment necessary for an adequate level of protection, and field services to install, test, and commission the cathodic protection system.

C. It is not the intent to specify completely herein all details of design and construction of the equipment and systems. However, the equipment and systems shall conform in all respects to high standards of engineering, design and workmanship and shall be capable of performing in continuous commercial operation up to 30 years.

D. Section Includes:

1. Cathodic protection system design by:
    a. Sacrificial Anodes.
    b. Impressed Current.
2. Equipment and materials supplied as part of the cathodic protection system.
3. Field installation and commissioning.

E. Furnished under this section:

1. The Contractor shall design, fabricate and test the specified equipment and services, including but not limited to the following:
    a. Full corrosion engineering review study of site data with respect to cathodic protection requirements.
    b. Initial report to include cathodic protection system design recommendations.

c. Related system components (cables, anodes, rectifier, test stations, etc.).
d. Required supervisory instrumentation.
e. Field installation supervision, inspection, and testing.
f. Startup spares and special tools.
g. Insulating flanges at underground risers and at dissimilar metal interfaces.
h. Coating repair at locations of lead wires.
i. Bonding for non-welded joints.
j. Drawings and design data to support facility design, construction and maintenance.
k. Inspection certificates and quality control documentation listed in this section.
l. Complete set of component cut sheets.
m. Receipt and off-loading at site.
n. Installation labor at site.
o. Operating, commissioning, installation and maintenance manuals for the supplied equipment.
p. Priced list of recommended spare parts for two years of operation.
q. Packing and shipping FOB to site.

F. Furnished by others under this section:

1. The supply by Others shall be limited to the following: Site geotechnical studies, soil and water test reports.

G. Related sections include the following: Division 26, Electrical.

1.03 REFERENCES

A. At a minimum, design of the system and components shall comply with the requirements of specifications identified in this section including:

1. American National Standards Institute (ANSI).
2. American Petroleum Institute (API).
3. American Society of Mechanical Engineers (ASME).
4. American Society for Testing and Materials (ASTM).
5. Factory Mutual (FM).
6. Heat Exchanger Institute (HEI).
7. Institute of Electrical & Electronic Engineers (IEEE).
8. Instrumentation, Systems, and Automation Society (ISA).
9. International Electrotechnical Commission (IEC).
10. International Organization for Standardization (ISO).
11. Manufacturer's Standardization Society of the Valve and Fitting Industry (MSS).
12. NACE International (NACE).
13. National Electrical Manufacturers Association (NEMA).
14. National Fire Protection Association (NFPA).

15. Technical Standards and Safety Authority (TSSA).
16. Occupational Health and Safety Administration (OSHA).
17. Underwriters Laboratories of Canada (ULC).

B. Codes and Standards:

1. The Contractor's design shall comply with the current editions, at the date of notice to proceed, of relevant internationally recognized codes, standards and regulations and all applicable codes, standards, and regulations for the Site as described in the Contract Documents. Where conflicts exist between standards, the more stringent requirements shall prevail. Deviations from relevant standards shall only be implemented with the written approval of the Owner.
    a. AISC 325 - Steel Construction Manual.
    b. ASME B16.34 – Valves-Flanged, Threaded, and Welding End.
    c. ASME B16.5 – Pipe Flanges and Flanged Fittings.
    d. ASME B31.1 - Power Piping.
    e. ASME B31.3 – Process Piping.
    f. ASME Section IX - Welding and Brazing Qualifications.
    g. ASME Section VIII - Unfired Pressure Vessels.
    h. ASTM - Standards for Materials.
    i. ASTM A105 – Carbon Steel Forgings for Piping Applications.
    j. AWS D1.1 - Structural Welding Code.
    k. NACE SP0285 - Corrosion Control of Underground Storage Tank Systems By Cathodic Protection.
    l. NACE SP0169 - Control of External Corrosion on Underground or Submerged Metallic Piping Systems.
    m. NFPA 70 - National Electrical Code.
    n. NFPA 85 – Boiler and Combustion Systems Hazards Code.

1.04 SYSTEM DESCRIPTION

A. Design Requirements:

1. Cathodic Protection Assessment.
    a. The need for external corrosion protection shall be based on field data on site conditions provided as attachments to this Section, operating experience with similar systems in similar environments, engineering and design specifications, sound engineering practices, and operating, safety, and economic considerations.
    b. For the initial phase of work, the Contractor shall prepare a written report and recommendation for the cathodic protection system. This report shall be submitted to the Owner for review and approval prior to purchasing or installing any equipment. The report shall include a plus or minus 10 percent grade cost estimate for the recommended cathodic protection system equipment. The

report shall include literature and descriptive catalogs covering all equipment proposed.

c. Unless otherwise specified by the Owner or local authorities, it is the discretion of the Contractor to identify the best cathodic protection arrangement (sacrificial anodes or impressed current) for application at the site.

d. The Contractor shall provide recommendations, specifications, and associated product literature in the written report for the following:
   1) Electrical continuity of pipelines (i.e. ductile iron pipe).
   2) Identify locations where electrical isolation is required and the means to achieve it.

2. General:
   a. The Contractor's cathodic protection design shall include protection for the new underground steel piping on the site.
   b. The Contractor shall be responsible for coordinating this cathodic protection design with owners of other cathodic protection systems associated with new and existing cathodic protection systems of underground piping and structures on or nearby the site.
   c. The Contractor shall be responsible for ensuring that pipelines are electrically continuous, and that electrical isolation is provided at the locations identified in the cathodic protection assessment report.
   d. The cathodic protection system shall be designed to facilitate periodic inspection and maintenance to ensure an adequate level of protection is provided throughout the design life of protected piping and structures.
   e. Hazardous operating conditions present at the proposed installation site shall be identified and properly addressed in the design of the CP system.
   f. Locations of anode installation shall be selected to minimize stray currents or earth potential gradients which can cause detrimental effects on foreign buried piping and structures.
   g. Special consideration shall be given to the presence of sulfides and sulfate reducing bacteria.
   h. Excessive current that can cause coating disbondment or hydrogen evolution shall be avoided.
   i. Where applicable, interference currents shall be investigated and appropriate measures shall be taken to mitigate corrosion effects on protected structures and piping as well as nearby features that may not be protected.
   j. In the event that cathodic protection is deemed unnecessary, the following elements are still required:
      1) Pipeline Electrical Continuity.
      2) Electrical Isolation.
      3) Corrosion Monitoring Test Stations.

B. Performance Requirements:

1. General:
   a. Cathodic protection systems design shall mitigate adverse effects of stray current on foreign structures within the influence of the CP system.
   b. All impressed current systems shall be designed with priority for safety considerations.
   c. The adequacy of cathodic protection shall be determined using NACE SP0169 criteria.

1.05 ALTERNATIVES

A. The Contractor may propose an alternative system after contract is under way. Any alternative system proposed by the Contractor shall provide equal or better performance at reduced capital cost. The Contractor shall clearly state the technical differences between the Base Bid and any proposed alternative. Proposed alternatives shall be supported with complete technical, performance, and cost data.

1.06 SUBMITTALS

A. Product Data: Provide bills of material, manufacturer catalog sheets, MSDS, and other pertinent details describing all components of the proposed system, including insulated joint details, anode description and test station details. Anode details shall include a description of the type and size of anode.

B. Drawings:

1. System drawings shall show overall layout of the piping and structures to be protected and locations of anode beds, test stations, electrical bonds, electrical isolating devices, and rectifiers.
2. Outline drawings include layouts, general assembly, components, foundation requirements, dimensions, weights, clearances, and methods of assembly.
3. The Contractor shall submit all drawings and design data to support facility design, construction and maintenance.

C. Schedule:

1. Contractor shall provide a preliminary schedule with estimates for the following:
   a. Number of days required for preparation of Evaluation Report and Recommendations.
   b. Number of days required for approval drawings.
   c. Number of days required for certified drawings.
   d. Number of days required for equipment to arrive on site (estimate).

e. Number of days included in price to inspect and test the installation and to startup the system.

D. Operating and Maintenance Instructions:

1. Product Operational and Maintenance Instructions including:
   a. Data Sheets.
   b. Special shipping, handling, and storage instructions.
   c. Recommended maintenance frequency and listing of suggested spare parts.
   d. Maintenance and repair instructions, including procedures and tolerances.
   e. Special tool or facility needs, etc.
   f. Bill of materials.
   g. Descriptive literature.
   h. Parts Lists (commissioning spares, startup spares, two-year spares, complete parts lists).
2. Instruction books shall include literature on all instruments and devices furnished with the equipment.

E. Quality Assurance/Control Submittals:

1. Submit qualification, inspection and testing procedures for review and approval prior to commencement of work activities. Quality related submittals may include:
   a. Design Data.
   b. Test Reports.
   c. Certificates.
   d. Manufacturer's Instructions.
   e. Manufacturer's Field Reports.

F. Closeout Submittals:

1. Updated layout drawings of the system and components shall be provided where field installation differs from original design.
2. Locations of anode installations shall be recorded in tabular form as well as on layout drawings and list appropriate notes on anode type, weight, spacing, depth, and backfill.

G. Warranty: Submit product warranty certificates.

1.07 QUALITY ASSURANCE

A. Qualifications:

1. The cathodic protection system shall be designed by a firm regularly engaged in the field of corrosion protection. An experience and customer list shall be provided for reference.

2. The Contractor shall directly employ a registered professional Engineer in the state of Louisiana who is also certified as a Corrosion specialist by the NACE International. The Contractor's Engineer shall seal their design documents.

B. Regulatory Requirements: Consideration shall be made in the design process to comply with all federal and local jurisdiction requirements for corrosion protection of underground and submerged structures.

C. Refer to Project Documents for general delivery, storage, and handling requirements.

1.08 DELIVERY, STORAGE, AND HANDLING

A. Packing and Shipping:

1. Loose pieces shall be boxed or crated for protection during shipment. Each container shall be identified with a securely fastened metal tag bearing the Purchase Order number and appropriate hanger or support number to indicate its place in the final installed assembly.
2. Fabricated pieces shall be blocked, strapped, or otherwise held in position during shipment and shall be further separated by dunnage as necessary to prevent damage.
3. Shipments include detailed packing lists. Packing lists shall detail by hanger or support number items consigned with each separate shipment.

B. Protective shipping containers and covers shall remain on components until removed for installation. Containers and covers that have been removed or opened for completion of required receiving inspections shall be replaced and resealed after completion of the required inspection.

C. Replace damaged materials unless the repair scope and procedure has been approved by the Engineer.

1.09 SITE CONDITIONS

A. Reference Contract Documents.

1.10 WARRANTY

A. Refer to Project Documents for warranty requirements.

PART 2 PRODUCTS

2.01 MATERIALS

A. All material selected for the construction of a cathodic protection system shall be new and the best available for the purpose for which they are used, considering strength, ductility, durability, and the best engineering practice.

B. All materials and equipment supplied by the Contractor shall be listed by Underwriters Laboratories except for classes of materials and equipment not available with such listing.

C. The following materials shall not be used under any circumstances:

1. Cadmium.
2. Silver.
3. Asbestos.
4. Cupronickel.
5. Paint containing lead of chromates.
6. Heavy metals including mercury and arsenic.
7. PCBs or other similarly hazardous materials.

2.02 SACRIFICIAL ANODE SYSTEM

A. Anode

1. Sacrificial anodes shall be constructed of one of the following materials:
   a. Standard potential magnesium: ASTM B843, UNS M11632.
   b. High potential magnesium: ASMT B843, UNS M151102.
   c. High purity zinc: ASTM B418, UNS Z13000.
2. Anodes shall be provided prepackaged with special backfill.
3. Anodes shall be installed near protected pipes and structures in a manner that allows optimal current distribution. Spacing shall typically be 5-10 feet from the protected structure and as close to the bottom elevation of the structure as feasible.

B. Backfill:

1. Magnesium anodes shall be backfilled with a mixture of 75 percent gypsum, 20 percent bentonite clay, and 5 percent sodium sulfate.
2. Zinc anodes shall be backfilled with a mixture of 75 percent gypsum, 20 percent bentonite clay, and 5 percent sodium sulfate or 50 percent gypsum and 50 percent bentonite clay.

2.03 IMPRESSED CURRENT SYSTEM

A. General: All protected piping and structures shall be electrically continuous. Bonds may be required from pipe to tank, tank to tank. Foreign underground structures may need investigation for isolation or continuity to mitigate the effects of stray current.

B. Rectifier:

1. Wiring to rectifiers shall comply with local electrical codes.
2. An external disconnect switch shall be provided in the AC power supply to the rectifier.
3. The rectifier case shall be properly grounded.

C. Anode: Impressed current anodes may be either high silicon cast iron or graphite. Alternate materials may be considered if appropriate for the site conditions.

D. Backfill: Provide special low resistivity coke breeze backfill around anodes.

2.04 ACCESSORIES

A. Test Stations:

1. Test stations for potential and current measurements shall be at sufficient locations to facilitate CP testing per Contractor provided operation and maintenance procedures.
2. Test station design shall permit disconnection of the anodes to correct potential measurements for IR drop to evaluate the protection level and include test leads from buried reference electrodes.
3. The test stations shall be supported with a 4-inch by 6-foot – 6-inch treated redwood post. The test leads shall be installed in conduit attached with straps to the post.
4. Test stations shall be visibly marked and installed at locations accessible for maintenance personnel, visibly marked, and protected from high traffic areas.

B. Reference Electrodes: Reference electrodes shall be copper/copper sulfate material. Alternate reference electrode materials may be considered with proper voltage measurement corrections provided by the Contractor.

C. Lead Wire:

1. Lead wire shall be minimum No. 12 AWG solid copper wire with thermoplastic insulation.
2. Where lead wires are to be thermally welded to the protected structure, wire shall be provided with a weldable steel core.
3. Lead wire connections shall be tested for mechanical strength and electrical continuity.
4. Sufficient slack shall be provided in lead wires to avoid damage due to soil settlement.
5. Lead wires shall be installed with at least 18-inch soil cover.
6. Lead wire connectors and connections shall be properly cleaned and coated after attachment with touchup coating compatible with the existing coating on the protected pipe or structure. Where necessary to connect lead wires to coating pipes and structures, a non-metallic abrasive sanding disc may be used to remove coating provided the area is properly recoated following wire connection.

D. Insulated Joints:

1. Insulated joints as detailed on the drawings, shall be installed in the flanged connections where indicated. Each of these insulated joints shall

be equipped with an overvoltage protector, installed in accordance with the manufacturer's instructions.

2. Insulated flange assembly shall be assembled and tested before welding it into the line.

E. Over Voltage Protection:

1. A device to provide over-voltage protection from lightning and fault current for an insulated joint. Dairyland Electrical Industries, Type OVP, or an approved equivalent, complete with mounting brackets suitable for installing the device utilizing the pipe flange connecting bolts.

2.05 SOURCE QUALITY CONTROL

A. Tests and Inspections:

1. Inspection and testing shall be in accordance codes specified.
2. Instruments shall be protected during testing.
3. Wiring shall be checked for continuity and insulation integrity.
4. Full information describing the tests which are included in the price quotation shall be included with the Proposal.
5. Certified copies of test results shall be submitted for acceptance before shipment of the equipment is made.

B. The Contractor shall establish an inspection plan for the equipment that shall include observation by the Owner of pertinent manufacture and test operations. The Contractor shall cooperate with, and assist as necessary, the Owner's inspectors.

PART 3 EXECUTION

3.01 FIELD QUALITY CONTROL

A. Field Service: The Contractor shall furnish the services of a qualified and experienced corrosion engineer to supervise the installation, start-up and testing of the cathodic protection system.

B. Inspections:

1. For anode installations, the Contractor's field engineer shall verify that the anode is centered in the hole or trench per the Contractors design and that the fill is placed and compacted so that no voids can exist.
2. The Contractor's field engineer shall inspect cable insulation, and anode and pipe line connections to make there is good continuity and connections make sure there is no damage prior to placement of backfill.

C. Tests:

1. Prior to energizing the CP system, data shall be collected to provide baseline measurements of such items as:
   a. Electrical continuity of bonded pipelines.
   b. Native (free corroding) potential.
   c. Structure to soil potential.
   d. Pipe to soil potential.
   e. Dielectric isolation, if present.
   f. Foreign structure to soil potentials.
   g. Test coupons, if present.
   h. Permanent reference electrodes, if present.
2. Testing of Insulated Flanged Joints (By Contractor):
   a. Using a test current applied from a temporary D.C. source, interrupt the current source.
   b. Measure the potential to a remote copper/copper sulfate electrode on side of the new pipeline.
   c. The potential shall change with a positive shift with the current interrupted. The potential on the other side of the insulated joint shall move in a negative direction. This is an indication that the insulated joint is effective.
   d. Improperly installed non-conducting flange insulation shall be replaced by the Contractor.
3. Following successful installation and testing of the cathodic protection system the following shall be recorded and provided with the final report submittal.
   a. Results of current requirement tests.
   b. Results of soil resistivity surveys;
   c. Location of foreign structures.
   d. Interference tests and design of interference bonds and reverse current switch installations.

3.02 COMMISSIONING

A. Current Adjustment:

1. The exact operating level of CP systems shall be determined by testing the installed system at different operating levels to ensure proper protection potential. If protective potentials are not adequate, the system shall be modified as required to provide an acceptable design in accordance with design requirements.
2. A survey shall be performed after each CP current adjustment to determine whether the sufficient protection is satisfied and to reassess interference to other structures or isolation points.
3. After installation is complete, the Contractor shall re-calculate the useful life of the anodes based upon soil resistivity and actual potential measurements. (The Contractor shall provide and use test coupons to

determine actual corrosion rates and shall install test points to facilitate the taking of potential measurements).

B. Stray Current Mitigation: If during commissioning and testing stray currents potentially detrimental to unprotected structures are measured or suspected to be present, the Contractor shall identify the points of concern to the Owner so they may be properly addressed prior to plant startup.

3.03 SUPPLEMENTS

A. Data Submittal Requirements:

	Document	Schedule	Action
With Bid			
	N/A		
After award of Contract			
	Completed technical data sheets	2 weeks after award of contract	For review
	Outline drawings of individual equipment	2 weeks after award of contract	For review
	Equipment weights broken down by maximum lifts to assemble, install, and do maintenance	6 weeks after award of contract	For review
	List of all materials of construction	4 weeks after award of contract	For review
	Description of Contractor's test methods and capabilities	2 weeks after award of contract	For review
	Recommended spare parts list for start-up and two years of operation	4 weeks after award of contract	For review
	Replacement parts and special tools list	4 weeks after award of contract	For review
After award of Contract			
	Submittal list with schedule	2 weeks after award of contract	For review
	Engineering, procurement, fabrication, and delivery schedule	2 weeks after award of contract	For information
	Inspection Test Plan and Schedule	4 weeks after award of contract	For review
	Connection and accessory details	4 weeks after award of contract	For review

	Document	Schedule	Action
	Equipment Data sheets	4 weeks after award of contract	For review
	Wiring drawings	4 weeks after award of contract	For review
	Installation drawings, instructions, and procedures	4 weeks after award of contract	For review
	Bills of material for supplied equipment	4 weeks after award of contract	For information
	Other QA required documentation from the General Technical Requirements	In accordance with Contractor QA program	For review
	Storage and handling procedures	2 months prior to shipment	For information
	Test procedures	4 weeks before test	For review
	Certified shop test reports	2 weeks after test completion	For review
	Operation and Maintenance Manual Documentation	2 months prior to shipment	For review

Equipment Tag	Service Description	P&ID Number
N/A	N/A	N/A

END OF SECTION

INTENTIONALLY LEFT BLANK

SECTION 48 58 68
WELDING OF POWER PLANT PIPING

PART 1 GENERAL

1.01 SUMMARY

A. This Specification includes welding and inspection requirements for shop fabrication and field installation of piping under ASME BPVC Section I or ASME B31.1.

B. This Specification does not include pipe welding performed for piping covered by other Specifications such as building services, drainage, or fire protection systems.

1.02 REFERENCES

A. The following is a list of codes and standards which may be referenced in this section:

1. American Society of Mechanical Engineers (ASME):
   a. B16.25, Butt Welding Ends.
   b. B31.1, Power Piping.
   c. BPVC Section I, Rules for Construction of Power Boilers.
   d. BPVC Section II, Materials Specifications.
   e. BPVC Section IX, Welding and Brazing Qualifications.
   f. BPVC Section V, Nondestructive Examination.
2. American Welding Society (AWS): QC 1, Standard for Certification of Welding Inspectors.
3. American Society of Nondestructive Testing (ASNT): SNT-TC-1A, Personnel Qualification and Certification in Non-destructive Testing.

B. Contractor shall also reference Section 05 05 23, Welding.

1.03 SUBMITTALS

A. In accordance with Section 01 33 00, Submittal Procedure.

B. Action Submittals:

1. Welding procedures; including procedure qualification records.
2. Detailed written pre-heat and post-heat treatment procedures indicating method of heating (direct flame heating not to be used), locations of thermocouples/pyrometers, and method of recording temperatures.
3. Induction Bending procedure including post bending heat treatment procedure.
4. WPS includes information required by ASME BPVC Section IX.
5. PQR’s includes information required by ASME BPVC Section IX.

6. Visual inspector's qualifications.
7. Nondestructive examination procedures.
8. Quality Control Plan.
9. Weld repair procedures.
10. Copy of Certificate(s) of Authorization for appropriate Code Symbol Stamp(s).
11. Filler metal product data. Show on welding procedure specification (WPS) and procedure qualification records by American Welding Society (AWS) classification, except that submerged arc wire and flux combinations shall be shown by AWS classification and manufacturers designation.
12. Preparation details for weld joint end preparation.

C. Informational Submittals:

1. Inspection, Test, and Examination Results.
2. Weld Maps.

D. Welding shall not begin until review and approval of documents required prior to start of fabrication is complete.

1.04 QUALITY ASSURANCE

A. Welding procedure specifications and procedure qualification records shall be in accordance with ASME Section IX as amended by ASME Section I or B31.1, as applicable.

B. Welder Qualifications:

1. Welders, welding operators, and brazers shall be qualified in accordance with ASME BPVC Section IX as amended by ASME BPVC Section I or ASME B31.1.
2. Maintain certified copies of qualification records at shop facility or Site. Submit if requested.
3. Maintain welders' qualification log outlining range of each welder's qualifications and dates qualified.
4. Each qualified welder shall be assigned a unique and unduplicated identifying symbol or number. Individual welders shall exclusively employ their own identifying mark. In event welder is terminated or leaves before completion of Project, identifying mark shall be retired and shall not be reassigned to another welder.
5. Renew performance qualification of welder if welder has not used the process for 6 months or more. Refer to ASME BPVC Section IX for additional items affecting requalification.

1.05 DELIVERY, STORAGE, AND HANDLING

A. Handling and storage of electrodes and fluxes shall be in accordance with requirements of ASME BPVC Section II, Part C and manufacturer's recommendations.

B. Low hydrogen electrodes shall be provided in hermetically sealed containers. Once removed from hermetically sealed containers, store electrodes in holding ovens or portable heated rod caddies. Electrodes not stored accordingly shall be used within the time frame of 4 hours for E70XX electrodes or either discarded or rebaked in reconditioning ovens in accordance with ASME BPVC Section II Part C.

PART 2 PRODUCTS

2.01 MATERIALS

A. Filler Metal: Welding and brazing filler metals shall meet requirements of ASME BPVC Section II, Part C.

B. Submerged arc fluxes that manufacturer recommends for single pass welds shall not be used for multiple pass welds, unless amperage and voltage restrictions are established to prevent excessive manganese and silicon content, and shall be approved by the Engineer.

C. When welding similar metals, deposited weld metal shall match chemistry and mechanical properties of base metal as closely as possible.

D. When welding two different ferritic steels, filler metal shall conform to steel with higher alloy contents.

1. When welding austenitic stainless to ferritic steels filler metal shall be:
   a. For service temperatures less than or equal to 500 degrees F ER309/E309 or ERNiCr-3/EniCrFe-3.
   b. For service over 500 degrees F filler metal shall be ERNiCr-3/EniCrFe-3.
2. When welding nickel alloys to ferritic steels, filler metal shall be ERNiCr-3/EniCrFe-3 unless otherwise approved by Engineer.

E. Unless specifically authorized by Engineer, filler metal shall be used only for primary material and process applications recommended in ASME material specification or by its manufacturer (e.g., filler metals designed for single pass welding shall not be used for multiple pass welds, filler metals designed for gas metal arc welding shall not be used for submerged arc welding, etc.).

F. For shielded metal arc welding, electrodes shall be of low-hydrogen type when welding on either carbon steel or low alloy steels with exception that E6010 may be used for root pass welding on carbon steel pipe for service codes designated in the Power Plant Pipe Index.

2.02 FABRICATION

A. Gas Metal Arc (GMA) and Submerged Arc Welding (SAW) are acceptable only in specific shop applications and when approved by Engineer.

1. The short circuit transfer mode of gas metal arc welding process is not allowed.

B. Fabrication Controls:

1. Perform in accordance with ASME B31.1, ASME Section I, and this section.
2. Preheat in accordance with ASME BPVC Section I or ASME B31.1 as applicable and as amended herein.
3. Backing rings and consumable inserts shall not be used.
4. Longitudinal seams in adjoining lengths of welded pipe shall be staggered and located so not to intersect openings and external attachments.
5. Threaded connections welded into lines shall have threads “chased” after welding with proper size pipe tap to remove scale and weld spatter, and to ensure full engagement of threads and a tight joint.
6. Welded Joints: In accordance with Section 40 50 20, Aboveground Power Plant Piping, as applicable.
7. Use electric (resistance or induction) or gas heat sources that provide uniform application of heat over weld area on carbon steel and low alloy steel materials (direct flame heating shall not be used). Check preheat and interpass temperatures using temperature indicating crayons, thermocouple, or contact or optical pyrometers with current calibration.
8. Maximum Interpass Temperature:
   a. Austenitic Stainless Steels and Nickel Alloys: 350 degrees F.
9. Maximum heating and cooling rates shall be in accordance with ASME BPVC Section I and ASME B31.1.
10. Application of heat to correct weld distortion or dimensional deviation without written approval from Engineer is prohibited.
11. Austenitic Stainless Steel: The following requirements shall apply when fabricating austenitic stainless steel or nickel alloy components:
    a. Fabricate stainless and nickel alloy pipe in a separate area from carbon and alloy steel pipe fabrication.
    b. Control tools used in fabrication in such a way as to minimize contact with steel alloys or free iron. Brushes shall be identified and controlled for stainless steel use only.

c. Perform grinding with resin or rubber bonded aluminum oxide or silicon carbide grinding wheels which are identified and controlled for their use on these materials only.
d. Block sequence welding and peening of welds are prohibited.
e. Acceptable cleaning solvents are new or redistilled acetone (acetone reclaimed by other methods shall not be used), alcohol (ethyl, methanol, or isopropanol), or toluene (toluol). Halogenated cleaning solvents shall not be used for cleaning or degreasing.

PART 3 EXECUTION

3.01 GENERAL

A. Maintain Welder Qualification Log in format as approved by Engineer.

B. No welding shall be performed until WPS's and PQR's have been approved by Engineer.

C. Safety measures for the protection of welders and operators involved in welding and cutting shall be in accordance with the practices specified in AWS Z49.1, plus all local, state, federal, and other governing regulations.

D. Remove scale, rust, dirt, or other foreign matter from ends of pipe before tacking or welding.

E. Clean pipe interior to remove dirt, debris, and other foreign matter before joints are aligned for welding.

F. Use caution in fitting up pipe and components for tack welding to ensure proper gap for full-penetration welds. Bridge tacks, if used, shall be removed.

G. Remove scale, slag, and other foreign material by chipping, grinding, and wire brushing after application of each bead. Observe interpass temperatures as required per WPS.

H. Welding Process:

1. Only shielded metal arc, gas tungsten arc, and flux cored arc welding shall be permitted in the field.
2. Welds on pressure retaining joints (including socket welds) shall be minimum of two passes. Root passes (including socket welds) shall be made with gas tungsten arc welding process.
3. Submerged arc multi-pass welding in carbon steels, and corrosion resistant steels shall use an essentially neutral flux.
4. Flux core arc welding of pressure retaining welds shall be allowed only with an external shielding gas.
5. Manual gas tungsten arc welding shall be done with addition of filler metal.

6. Welding processes using coatings or flux shall not be used for root pass welding on stainless steels, or nickel alloys unless slag can be removed from underside of root pass and area inspected.
7. Shielding and Purge Gases:
    a. When shielding gases are used, welding procedure specification shall indicate gas composition and flow rate.
    a. Stainless steels, nickel alloys, of 2 percent Cr or higher shall have root pass purged with Argon. Maintain purge until minimum of three passes have been completed. P22 piping may have root pass welded without purge when specifically approved by Engineer.

I. Repairs:

1. Basemetal:
    a. Repair of base metal shall be allowed only with prior written approval by Engineer.
    b. Should laminations or split ends be discovered in pipe, joints containing such defects shall be cut back to point where these defects no longer exist.
2. Arc Strike:
    a. Pipe that is arc burned during welding shall, at Engineer's option, be cut out and replaced in accordance with applicable WPS.
    b. Repair by grinding and welding.
    c. Inspect cavity by liquid penetrant or magnetic particle examination, as applicable.
    d. Weld per the WPS and verify minimum pipe wall thickness is maintained.
3. Weld Defect:
    a. Remove by flame, cutting, grinding, arc gouging, chipping, or machining.
    b. Inspect cavity by liquid penetrant or magnetic particle examination.
    c. Weld per approved WPS, unless otherwise approved by Engineer.
    d. Examination and inspection of completed weld repair shall be as required for original weld or Engineer's approved alternate method that provides equal or greater soundness of weld.

3.02 WELDING QUALITY CONTROL

A. Weld Inspection, Examination, and Testing:

1. Visual Examination: Welds shall receive 100 percent visual examination and be documented.

2. Nondestructive Examination:
   a. Welds, as applicable shall be subjected to a nondestructive examination in accordance with ASME BPVC Section I or ASME B31.1. Records of examinations shall be available to Engineer upon request.
   b. Perform NDE (RT, UT, MT, and PT) as required in ASME BPVC Section I, and project specific requirements.
   c. Perform NDE as required by B31.1 and project specific requirements.
      1) NDE of welds in Carbon Steel piping may be performed before or after Post Weld Heat Treatment.
      2) Radiography of piping welds with 6 percent Chrome or less may be performed before or after Post Weld Heat Treatment. The completed weld shall be Magnetic Particle examined after Post Weld Heat Treatment.
      3) Acceptance Radiography of welds in P91 piping shall be performed after Post Weld Heat Treatment.
   d. Nondestructive examinations shall be documented in accordance with applicable code. Personnel performing nondestructive examinations shall be qualified and certified in accordance with ASNT SNT-TC-1A.
   e. Engineer may order nondestructive examinations by independent testing laboratory in addition to those required by applicable codes. If weld is defective, laboratory cost, repair, and re-examination shall be at the expense of fabricator/Contractor. Acceptable standards shall be in accordance with applicable codes.
   f. Welding Inspectors: Personnel performing or supervising visual examination shall be qualified as Senior (SCWI) or Certified Welding Inspector (CWI) in accordance with AWS QC 1 or equivalent qualification approved by Engineer.
3. Provide records of inspection, NDE, PWHT, Hardness and other activities identified by the Engineer.
4. Retain records of inspection, nondestructive examination, post-weld heat treatment, hardness testing, material certification, radiographic film, and other records for 5 years after completion of Work.

END OF SECTION

INTENTIONALLY LEFT BLANK

SEWERAGE and WATER BOARD

of

NEW ORLEANS

VOLUME 2, PART 2

REFERENCE INFORMATION

FOR

CONTRACT 1444

WEST POWER COMPLEX FUEL OIL DELIVERY SYSTEM

INDEX OF CONTRACT DOCUMENTS
FOR
CONTRACT 1444
CARROLLTON WATER PURIFICATION PLANT
WEST POWER COMPLEX FUEL OIL DELIVERY SYSTEM

DESCRIPTION

REFERENCE INFORMATION

Appendix A1	Geotechnical Engineering Report, Eustis, Dated August 26, 2022
Appendix A2	Stormwater Management Plan (SWMP), including Preliminary Stormwater Pollution Prevention Plan (SWPPP), Volkert, Dated September 2022

REFERENCE INFORMATION

APPENDIX A1

Geotechnical Engineering Report, Eustis, Dated August 26, 2022

26 August 2022

Power Engineers, Inc,
Post Office Box 1066
Hailey, Idaho 83333

Attention Mr. Cory Webster, P.E., SE
PN 1-208-288-6207
Email corywebster@powereng.com

Ladies and Gentlemen:

Revision 1
Geotechnical Exploration
Sewerage & Water Board of New Orleans
West Power Complex Project
Carrollton Water Plant
New Orleans, Louisiana
Power GSA No. 007-11144
Power Project No. 174602.01.12.03
Power Task Order No. 001
Power Purchase Order No. 270804
Eustis Engineering Project No. 24753

Transmitted is an electronic copy of our ***revised*** report covering professional geotechnical services for the subject project. Hard copies are available upon request.

Thank you for asking us to perform these geotechnical services.

Yours very truly,

EUSTIS ENGINEERING L.L.C.

Patrick A. Thurmond

PATRICK A. THURMOND, P.E.

STATE OF LOUISIANA
PATRICK A. THURMOND
License No. 44237
PROFESSIONAL ENGINEER
IN
CIVIL ENGINEERING

P. T. Duckworth:brp

REVISION 1

GEOTECHNICAL EXPLORATION

SEWERAGE & WATER BOARD OF NEW ORLEANS

WEST POWER COMPLEX PROJECT

CARROLLTON WATER PLANT

NEW ORLEANS, LOUISIANA

POWER GSA NO. 007-11144

POWER PROJECT NO. 174602.01.12.03

POWER TASK ORDER NO. 001

POWER PURCHASE ORDER NO. 270804

EUSTIS ENGINEERING PROJECT NO. 24753

FOR
POWER ENGINEERS, INC.
HAILEY, IDAHO

BY

EUSTIS
ENGINEERING L.L.C.
SINCE 1946
METAIRIE, LOUISIANA

25 AUGUST 2022

TABLE OF CONTENTS

INTRODUCTION 1
SCOPE OF SERVICE 2
AVAILABLE GEOTECHNICAL DATA 2
FIELD EXPLORATION 3
LABORATORY TESTS 7
DESCRIPTION OF EXISTING SITE CONDITIONS 8
Site Description and Topography 8
Stratigraphy and Subsurface Profiles 9
Groundwater 10
FOUNDATION ANALYSES 10
Furnished Information 10
Foundation Recommendations 11
GROUNDWATER MANAGEMENT 13
SITE PREPARATION 14
In-Situ Properties 16
Fill Settlement 18
Areal Subsidence 19
LATERAL EARTHEN PRESSURES 19
Deep Foundations 21
Installation of Driven Piles 32
INSTALLATION OF ACIP PILES 35
PROBE PILES, TEST PILES, AND LOAD TESTS 38
Inspection and Monitoring of Existing Structures 40
Vibrations 40
ADDITIONAL ENGINEERING ANALYSES FOR DESIGN 42
GEOTECHNICAL SERVICES DURING CONSTRUCTION 42
LIMITATIONS 43

TABLE OF CONTENTS (CONTINUED)

FIGURES

Figure 1	Site Vicinity Map
Figure 2	Geotechnical Exploration Plan
Figure 3	Subsurface Soil Profile
Figure 4	Estimated Allowable Single Pile Load Capacities – Treated ASTM D25 Quality Timber
Figure 5	Estimated Allowable Single Pile Load Capacities – Square, Precast Concrete piles
Figure 6	Estimated Allowable Single Pile Load Capacities – Open-End, Steel Pipe Piles
Figure 7	Estimated Allowable Single Pile Load Capacities – Augered, Cast-In-Place Concrete Piles
Figure 8	Vertical Load Capacity of Rows or Groups of Piles
Figure 9	Spacing of Pile Groups and Spacing of Piles Within Rows or Groups
Figure 10	Estimates of Design Parameters for Use with Lateral Load Analyses (E.G., LPILE)(1)
Figure 11	Results of LPILE Analyses for Vertical Piles
Figure 12	Axial and Horizontal Resistance of Batter Piles

APPENDICES

Appendix I	Furnished Data Reports by Ardaman & Associates, Inc.
Appendix II	Previous Exploration Data by Eustis Engineering L.L.C.
Appendix III	Current Logs of Borings and Laboratory Test Results
Appendix IV	Current Cone Penetration Test Records
Appendix V	Electrical Resistivity Test Data
Appendix VI	Chemical Test Results
Appendix VII	Furnished Settlement Plate Data and Topographic Survey by Gotech, Inc.
Appendix VIII	Seismic Hazards Report
Appendix IX	Results of Lateral Load Analyses

REVISION 1

GEOTECHNICAL EXPLORATION

SEWERAGE & WATER BOARD OF NEW ORLEANS

WEST POWER COMPLEX PROJECT

CARROLLTON WATER PLANT

NEW ORLEANS, LOUISIANA

POWER GSA NO. 007-11144

POWER PROJECT NO. 174602.01.12.03

POWER TASK ORDER NO. 001

POWER PURCHASE ORDER NO. 270804

EUSTIS ENGINEERING PROJECT NO. 24753

INTRODUCTION

1. This ***revised*** report contains the results of a geotechnical exploration performed for a proposed power complex located within Basin C-7 at the Sewerage & Water Board of New Orleans' (SWBNO) Carrollton Water Plant in New Orleans, Louisiana. A site vicinity map of the project is provided on Figure 1. The work was performed in general accordance with the base and supplemental scopes of service outlined in Eustis Engineering L.L.C.'s proposal, dated 27 January 2022. Power Engineers, Inc. (Power) provided authorization to proceed with the scope of service by issuance of Purchase Order No. 270804, dated 18 February 2022. SWBNO is the project owner. Power is the structural engineer for the proposed operations building working in collaboration on the redevelopment of Basin C-7 with Jacobs Engineering Group, Inc. (Jacobs) and Volkert, Inc. (Volkert).

SCOPE OF SERVICE

2. Eustis Engineering's geotechnical exploration included the drilling of three undisturbed, sample-type soil test borings; sounding of a seismic cone penetration test (SCPT); and performance of field electrical resistivity tests at two locations to determine subsoil conditions and stratification and to obtain samples of the various strata encountered. Due to the presence of crushed stone fill and geogrid reinforcement at the site, field thermal resistivity tests included in our original scope of work were changed to laboratory resistivity tests. Soil mechanics laboratory tests, performed on samples obtained from the borings, were used to evaluate the physical properties of the various substrata. In conjunction with the soil borings, SCPT, laboratory test results, and available subsurface data, engineering analyses were performed to determine estimates of allowable vertical pile load capacities, soil-pile interaction analyses for laterally-loaded single piles, estimates of settlement, and seismic Site Classification in accordance with the 2015 International Building Code (IBC). We also provide general construction recommendations, active and passive earthen pressure estimates for various soil types and depths, site preparation, drainage, placement of fill, and compaction.

AVAILABLE GEOTECHNICAL DATA

3. Power furnished data reports prepared by Ardaman & Associates, Inc. (Ardaman), dated 18 May and 17 September 2021. Pertinent data from these furnished documents are presented in Appendix I. The approximate locations of the pertinent borings are shown on Figure 2.

4. Eustis Engineering previously performed multiple geotechnical explorations in the vicinity of the proposed power complex. The results of the explorations are contained in the following reports and have been referenced to complete this current project.

- "Final Report, Professional Geotechnical Services, Sewerage & Water Board of New Orleans, Carrollton Water Treatment Plant C-7 and C-8 Basin Demolition, Phase I and II: Engineering Report, New Orleans, Louisiana, Volkert Project No. 645101.LU, Eustis Engineering Project No. 23394," dated 12 April 2018; and
- "Final Report, Geotechnical Investigation, U.S. Army Corps of Engineers, Preparation of an Engineering Alternative Report for Perimeter Flood Protection at The Carrollton Water Plant Power Complex (OSP-03), Orleans Parish, Louisiana, Contract No. W912P8-07-D-0059, Eustis Engineering Project No. 20514," dated 22 March 2011.

5. The locations of pertinent borings and cone penetration tests (CPTs) performed during the previous explorations and utilized for these analyses are provided on Figure 2. The logs of the previous borings and CPTs and summaries of laboratory test results are provided in Appendix II.

FIELD EXPLORATION

6. General. The scope of the field exploration included the drilling of three borings, designated as BH-1 through BH-3, and performance of one SCPT, designated as SCPT-1. The borings were drilled to a depth of 120 feet below the existing ground surface using a truck-mounted drill rig between 28 February and 4 March 2022. The SCPT was performed using a track-mounted cone penetrometer rig to refusal at a depth of approximately 45 feet below the existing ground surface on 23 March 2022. The approximate locations of the borings and SCPT are shown on Figure 2. Detailed descriptive logs of the borings are shown in both tabular and graphical form in Appendix III. Records of the CPT sounding are plotted graphically with depth and are provided in Appendix IV.

7. Upon completion of field exploration activities, the borings were grouted and the SCPT was sealed in accordance with current regulatory requirements. GPS coordinates were

obtained for the boring and SCPT locations using a handheld device and should be considered approximate. These coordinates are shown in terms of latitude and longitude on the boring logs and SCPT record in Appendices III and IV. Ground surface elevations for the exploration locations were estimated based on furnished topographic survey data.

8. In-situ electrical resistivity tests were performed on 21 March 2022. Two locations were chosen by Power as center points for the electrical resistivity tests (ERTs). These locations are designated as RE-C and RE-D, as shown in Figure 2. At each ERT center point, two sets of ERTs were performed at various intervals along pairs of perpendicular transects. For each transect, measurements were taken at 1.25, 2.5, 5, 7.5, 10, 15, 20, 25, 30, 40, 50, 60, and 80-ft spacings. The results of the in-situ resistivity tests are presented in Appendix V.

9. Additionally, in-situ thermal resistivity tests were proposed to be performed using a thermal conductivity probe to a depth of approximately 6 feet. However, due to existing ground surface conditions and shallow groundwater during field operations, in-situ thermal resistivity testing could not be performed. As an alternative, we utilized our track-mounted Geoprobe® rig to continuously sample via percussion-driven Macro-Core® (MC7) to a depth of 10 feet below the existing ground surface. The MC7 sampler was retained within the sample sleeve and transported to our laboratory for thermal resistivity testing.

10. Soil Borings. Cohesive or semi-cohesive subsoils were sampled at close intervals or changes in strata using a 3-in. diameter thinwall Shelby tube sampling barrel. The undisturbed samples were immediately extruded from the sampling barrel in the field. Pocket penetrometer tests were performed on trimmed ends of the extruded samples to provide a general indication of the soil's shear strength or consistency. The results of these tests are shown on the boring logs in Appendix III under the column heading "PP."

All samples were inspected and visually classified by Eustis Engineering's soil technician. Representative portions of the samples were placed in moistureproof containers and returned to Eustis Engineering's laboratory for additional testing.

11. Samples of cohesionless and semi-cohesive materials were obtained from the borings during the performance of in-situ Standard Penetration Tests. This test consists of driving a 2-in. diameter sampler 1 foot into the soil after first seating it 6 inches. A 140-lb weight dropped 30 inches is used to advance the sampler. The number of blows required to drive the sampler is indicative of the relative density of cohesionless soils and the consistency of cohesive soils. The results of the Standard Penetration Tests are shown on the logs of the borings in Appendix II under the column heading "SPT." The samples were inspected and visually classified by Eustis Engineering's soil technician before being placed and sealed in a moistureproof container for transportation to our laboratory.

12. Direct Push Samples. Soil was continuously sampled at two locations adjacent to BH-1 by direct push methods using a Macro-Core® (MC) Geoprobe sampler. The samples were obtained using an MC7 sampler with plastic liners that were sealed immediately after being retrieved to preserve their natural moisture content. The samples were brought to our laboratory, extruded from the sample liners, inspected, and visually classified by Eustis Engineering's laboratory technician.

13. Cone Penetration Test. The SCPT was performed with a track-mounted rig using an electronic piezocone penetrometer having a 5-ton capacity and a net area ratio of 0.80. Testing was performed in general accordance with methods and procedures outlined in ASTM D5778-20. The SCPT was performed using a 10-cm^2 cross-sectional area cone with a 60° apex angled tip and 150-cm^2 sleeve area. The penetrometer was hydraulically advanced into the ground at an approximate rate of 2 cm/sec. During static piezocone testing, CPT parameters (tip resistance, friction resistance, and pore pressure) were

recorded at 2-cm depth intervals. In Appendix IV, the SCPT plot presents the measured tip resistance (q_t), sleeve friction (f_s), and pore pressure (u_2). The estimated undrained shear strength (S_u), equivalent standard penetration resistance (N_{60}), and interpreted soil behavior type (SBT) are also provided on the SCPT record. These values are interpreted from correlations developed by Lunne, Robertson and Powell (1997 and 1986) and our engineering experience in southeastern Louisiana.

14. During the CPT sounding, seismic testing was performed in general accordance with ASTM D7400-17. The seismic testing performed consisted of shear wave testing. Shear wave velocities were measured at 5-ft depth intervals using a geophone enclosed within the electronic piezocone penetrometer. Shear waves (S-waves) were induced by striking an instrumented hammer against a plate affixed to a beam positioned on a cleared area of the existing ground surface. The beam was aligned perpendicularly with the longitudinal axis of the cone penetrometer rod string and held in place by the cone penetrometer rig's tracks. S-waves were received by geophones housed within the piezocone and aligned along the axis parallel with the striker plate located at the existing ground surface. The SCPT computer acted as an oscilloscope and recorded the induced S-wave. S-wave velocities (V_s) by depth, determined using the seismic data, are presented on the SCPT record in Appendix IV.

15. Field Resistivity Testing. Electrical resistivity tests were performed using the Wenner four-electrode method (ASTM G57-06). For each test, a representative of Eustis Engineering inserted four electrodes (also referred to as pins) into the ground with equal horizontal distances between the electrodes. An electric current was applied across the outermost electrodes and voltages were measured at the two innermost electrodes. A Miller 400 soil resistance meter was operated to provide a measured resistance as a dial reading and a multiplier. We understand this meter induces alternating current into the soil supplied at 97 Hz and should be insensitive to Alternating Current (AC) or Direct

Current (DC) ground currents; however, the meter records a resistance rather than a separate voltage drop and amperage. The measured voltage drop (resistance) between the two innermost electrodes was then used to estimate the soil electrical resistivity.

16. Surface conditions at the site generally consist of mixed fill. The maximum "a" spacing for the Wenner array was 80 feet for each location as further intervals were prohibited by the concrete walls within Basin C-7. Other site conditions can affect the readings. Non-uniform soil conditions in the horizontal and vertical directions from the pin locations can alter the measurements of resistivity. Resistance measurements can be affected by the proximity of other site features such as underground pipelines, obstructions, and foundations similar to the existing concrete grade beams found relatively near to the ground surface.

LABORATORY TESTS

17. Soil mechanics laboratory tests consisted of visual classification, natural water content, unit weight, unconfined compression shear (UC), and one-point unconsolidated undrained triaxial compression shear (OB). In addition, the test establishing the percent passing the U.S. Standard No. 200 sieve (-#200) and tests to determine Atterberg liquid limits and plastic limits were performed on selected representative samples to aid in classification of the subsoils and to determine the relative strength and compressibility of the subsoils. The results of these laboratory tests are tabulated on the boring logs in Appendix III.

18. Grain size sieve analyses (SV) were performed on selected representative samples to determine their particle size distribution. These tests were performed to help classify cohesionless soils encountered in the borings. Separate plots of these test results are provided in Appendix III following the boring logs.

19. Laboratory thermal resistivity tests (THERM) were performed on samples obtained from a direct push boring made for this purpose within the fill adjacent to BH-1. The direct push boring comprised a single MC-7 sample with a total length of 8 feet pushed from the existing ground surface. Thermal resistivity testing was performed in accordance with ASTM D5334-14 using a KD2 PRO SML1-TPA-1 Thermal Conductivity Probe calibrated by the manufacturer. Two remolded test samples, designated as BH-1 and BH-2, were taken from the 1-ft and 5-ft depths, respectively, in the direct push boring. These samples were then tested at four moisture contents (1A, 1B, 1C, and 1D and 2A, 2B, 2C and 2D) ranging from approximately saturated to unsaturated. The results of the laboratory thermal resistivity testing are presented on separate plots in Appendix III following the other boring logs and test data plots.

20. Chemical tests consisting of pH, resistivity, sulfate ion, and chloride concentration were performed on selected samples from the borings to evaluate corrosion potential of the subsoils. These results are provided in Appendix VI and discussed subsequently in this report. These tests were performed by Pace Analytical Services, LLC, St. Rose, Louisiana.

DESCRIPTION OF EXISTING SITE CONDITIONS

Site Description and Topography

21. The project area is located within the SWBNO's Carrollton Water Plant in New Orleans, Louisiana. As shown in Figures 1 and 2, the project area is located within the former C-7 basin bounded by Monticello Avenue to the west, existing water tanks, the filled C-8 basin and South Claiborne Avenue to the north, Basins C-5 and C-6 to the east, and Basin L-1 to the south. At the time of this writing, the project area consisted of the recently backfilled Basin C-7. The adjacent Basin C-8 was backfilled at the same time. Nearby development includes other water plant facilities and residential and commercial buildings.

22. The filled ground surface elevation within Basins C-7 and C-8 generally ranged between el 3 and el 4 (NAVD 88). Leaving the basin to the west, the ground surface slopes up to the levee crown at approximately el 12 before sloping back down to Monticello Ave. The ground surface to the north of the Basin C-8 retaining wall starts at approximately el 10 and slopes down to approximately el -1 in the tank area.

Stratigraphy and Subsurface Profiles

23. Area geology can be generally characterized as Holocene age deposits overlying Pleistocene deposits. Based on our review of the boring logs for the current exploration, the surficial fill deposits appeared to extend approximately 6 to 7 feet below the existing ground surface. These fill materials were in turn underlain by extremely soft to soft gray, brown, gray, and tan organic clay and fat clay with wood deposits extending to the approximate 22-ft depth. Next in the stratigraphy, soft to medium stiff gray fat clay was encountered to approximately 60 to 70 feet below the existing ground surface with isolated strata of medium dense to very dense fine sand encountered between the approximate 25 to 32-ft depths and again between the approximate 42 to 46-ft depths. Below these materials, interbedded strata of loose gray clayey sand, medium stiff to stiff gray and tan lean clay, and medium stiff fat clay were encountered to approximately 90 to 95 feet below existing grade. Medium dense to dense gray and tan fine sand and silty sand continued to the terminal depth of the exploration approximately 120 feet below existing grade. A graphical subsurface profile depicting these variations is provided as Figure 3. Interpreted stratigraphy at individual boring locations is provided on the boring logs in Appendix I through III. The interpreted soil behavior types on the SCPT sounding in Appendix IV are in general agreement with the interpreted stratigraphy on the boring logs.

Groundwater

24. To determine the groundwater conditions at the time of the field exploration, observations were made in an auger boring performed adjacent Boring BH-1. The auger boring was drilled without the addition of water or drilling fluids to a depth of 3 feet where free water was initially encountered. After observation period of approximately 24 hours, free water was generally observed in the borehole approximately 2 feet below the existing ground surface, which correlates to approximately el 1. The depth to groundwater will vary with climatic conditions, drainage improvements, and other factors. The depth to groundwater should be determined immediately prior to beginning work by those persons responsible for construction.

FOUNDATION ANALYSES

Furnished Information

25. We understand a new power complex is proposed to be constructed within Basins C-7 and C-8 at the SWBNO's Carrollton Water Plant. We understand Basin C-8 will be developed by others in conjunction with the improvements within the Basin C-7. Basin C-7 complex will consist of various structures including an operations building and underground duct banks. We understand the levee along Monticello Avenue no longer serves as part of a flood protection system but will remain to provide visual separation from the adjacent neighborhood. Some fill may be required for a retaining wall planned along the existing levee as well as an access ramp from the levee into the basin/site; however, we have assumed additional fill within Basin C-7 will be limited to 12 inches or less. Power furnished settlement tolerances of 1-in. total settlement and ½-in. differential settlement for pile-supported structures and 1½-in. total settlement and ¾-in. differential settlement for underground duct banks.

26. Furnished drawings and discussions with the design team indicate that during the previous demolition of Basins C-7 and C-8s, the pile-supported transverse and drain struts were left in place. We understand the previous concrete slab was demolished prior to backfilling. Volkert provided settlement survey data for four settlement plates located within Basin C-8 monitored during and after the backfilling operations from 17 August 2021 through 22 March 2022. We understand the backfill comprised approximately 6 feet (el -3 to el 3) of sand, lightweight aggregate (LWA), and crushed stone (610). The available data from Basin C-8 generally indicate the sand extends up to el 0 to 0.5, the LWA then extends up to el 2.7 to 3.6, and the 610 limestone was placed to el 3 to 4.5 while settlement was occurring. We provide copies of the furnished settlement plate data and topographic survey by Gotech, Inc., dated 1 December 2021, in Appendix VII.

Foundation Recommendations

27. Based on the furnished settlement tolerances, estimates of settlement due to the placement of backfill, and potential pile installation challenges, we recommend the proposed structures be supported on deep foundations consisting of driven, open-end steel pipe (OSP) piles designed to support the structural loads with anticipated settlement within project tolerances. Other deep foundation solutions such as timber, square precast concrete (SPC) piles, augered cast-in-place (ACIP) concrete piles, or helical piles may be considered for design. However, selected pile types will also need to consider installation methods and other construction considerations (vibrations, predrilling, damage due to obstructions, etc.). Both allowable pile capacity and settlement potential should be considered in pile size, spacing, and tip embedment selection. Each independent structure should be supported on piles having the same approximate tip embedment below the existing ground surface to minimize differential settlement of individual structures or integrated features. Slabs should be cast monolithically with

grade beams (if utilized) and pile caps to provide rigidity and to minimize the potential for differential settlement.

28. Consideration should be given to differential settlement between pile-supported structures and adjacent sidewalks, ramps, parking areas, and other structures which are not pile supported or are supported by piles embedded at significantly different embedments. The use of landscaping and hinged connections adjacent to the building will help to mitigate the effects of differential settlement and increase the overall aesthetics of the proposed building; however, long-term recurring maintenance of the pavements and sidewalks should be anticipated, especially where surface-supported features adjoin pile-supported features.

29. Your structural engineer should determine the appropriate foundation type for each structure based on estimated allowable pile capacities and settlement estimates presented in this report and consider the settlement tolerances for each structure.

30. The previous site development will provide unique challenges during construction. The structural design must consider the location of the existing pile-supported struts and proposed pile locations should avoid conflicts. In extreme cases, limited excavations to remove the existing struts to allow for new pile installation may be possible. Eustis Engineering should be contacted if excavations to remove the existing struts are proposed. We recommend shallow predrilling or prepunching be performed to identify potential obstructions from previous site development during new pile installation as described subsequently. ***Based on the critical nature of Basins C-5, C-6, and L-1, extreme care must be taken during construction to monitor and identify any potential impacts construction activities may have on the adjacent structures. We strongly recommend the existing structures be inspected and monitored prior to and for the duration of construction activities.***

31. All fill required to reach finished grade beneath the proposed structures should be placed as far in advance as possible of construction operations to reduce the undesirable effects of subsoil consolidation due to fill on the new features. Fill placement may also have undesirable effects on the existing site features and monitoring of these features and impacts will be required. If more than 12 inches of additional, new fill will be placed at the site to raise construction grades, Eustis Engineering should be contacted to reevaluate the recommendations provided within this report. We recommend instrumentation in the form of settlement plates, vibrating wire piezometers, or settlement points be planned to monitor ongoing settlements in Basin C-7 and at the surrounding existing features. This instrumentation could be utilized in conjunction with ongoing monitoring in Basin C-8 to provide additional context to ongoing settlements and potentially provide a reduction in post-construction settlement magnitudes or rates as currently estimated.

GROUNDWATER MANAGEMENT

32. Construction Drainage. The initial step to prepare the site for construction should be to establish adequate drainage to prevent ponding of water and provide immediate runoff of rainfall. This can be accomplished by grading the site to positively drain water away from all paved areas and foundations. Sumps and pumps may be required to remove water from ditches and shallow excavations.

33. Permanent Drainage. The near-surface soils are subject to a reduction in shear strength and excessive settlement if allowed to become saturated; therefore, we recommend adequate permanent drainage be provided to collect rainfall away from existing and new foundations and pavements after completion of construction. All down spouts or rainfall collection systems for project features should be connected to pipes which discharge into the site's stormwater and disposal system. Particular attention should be given to any

surface-founded structures and pavements, and permanent drainage should be installed to discharge rainfall away from their foundations.

SITE PREPARATION

34. Clearing and Stripping. Where applicable (generally along the existing levee) beneath the proposed structures, the existing ground surface should be stripped of vegetation, loose topsoil, debris, loose fill, organic matter, and any other deleterious materials. Stripping should be to a depth necessary to remove vegetation and roots and reach firm undisturbed soil. The exact depth of stripping should be determined during construction. Weak zones, excavated areas, or depressions resulting from clearing, stripping, and demolition operations should be thoroughly cleaned out to the surface of firm undisturbed soil and backfilled with a select structural fill material placed and compacted under controlled conditions. Clearing and stripping should also comply with Section 201 of the Louisiana Standard Specifications for Roads and Bridges (LSSRB), 2016 edition.

35. Demolition. All existing structures located within the proposed foundation construction areas should be identified and, where feasible, also demolished and removed from the site. We generally recommend the existing struts be left in place. Provisions should be made to locate any abandoned underground utilities and foundations which could impact new construction. Existing footings or abandoned pipes should be excavated and removed from the site or avoided during placement of new features. These structures could impact the performance of new foundations if not properly removed, proofrolled, and backfilled with structural fill material.

36. Existing piles are known to be present within the basin but should generally not be incorporated into the new structures without adequate testing and evaluation for applicability. In general, new features (such as the base of pile caps) should not extend closer than 3 feet above the remaining pile-supported beams and struts. Eustis

Engineering should be notified of conflicts (less than 2 feet of spacing) between new and existing piles. Removal and relocation of structures and obstructions should also comply with Section 202 of the LSSRB.

37. Conflicts with Existing Structures. Power has indicated limited clearance may be available between proposed duct banks and the existing pile-supported struts and beams (understood in some to be less than 6 inches). Differential settlement between existing and proposed structures (particularly if grade supported) must be considered in design for these cases. If less than 12 inches of separation will be provided between the existing pile-supported struts/beams and proposed structures like pile caps or ducts, we recommend a layer of highly compressible material be placed between the two to minimize a "hard point" and allow proposed structures to deflect and bridge over the existing pile-supported struts/beams. A low density (high void) expanded polystyrene may be considered for this application and should be sufficiently thick to account for the estimated settlements provided subsequently in this report. The magnitude of potential differential settlement will be a function of whether the proposed structure is pile or grade supported.

38. Incidental Structural Fill and Backfill. A select granular material, such as locally available river sand (USCS SP material), should be used as form fill, backfill, and/or structural fill required to reach design grade. The material selected should be free of wood, roots, clay lumps, and other deleterious materials and should have an organic content no greater than 5% by weight. Sand fill should be non-plastic and conform to the requirements for an A-3 material according to the AASHTO Soil Classification System with no more than 10% by weight of material passing a U.S. Standard No. 200 mesh sieve. Care should be taken to generally mimic the design fill section developed in the previous site redevelopment.

39. Compaction. Structural fill used as backfill or form fill beneath pile-supported structures should be placed in loose lifts of 8 to 10 inches and compacted to at least 95% of its maximum dry density near optimum moisture in accordance with ASTM D698. Structural fill or general fill used for non-structural grading should be spread in loose lifts of 10 to 12 inches and compacted by several passes of a bulldozer.

40. Quality Control. Prior to transporting structural fill to the site, a sample of borrow material should be tested to verify its conformance to the specifications. Density tests should be performed on each lift of the compacted structural fill to determine if the contractor has achieved the recommended density. The frequency of these tests is dependent on the individual structure, type of fill material, and site conditions, and should be determined once these variables are known. All clearing, filling, and compaction operations should be accomplished only during periods of dry weather. The contractor should exercise caution during and after inclement weather to ensure subsoil support is not degraded by construction operations.

In-Situ Properties

41. Seismic Site Classification. A seismic Site Classification, in general accordance with the IBC, was requested for this project. According to Section 1613.3.2 of the IBC and Chapter 20 of ASCE 7-10, this site may be categorized as a Site Class E, a "soft soil" profile. The S_1 parameter is 0.052 and the S_s parameter is 0.096. A full hazards report from ASCE 7 is presented in Appendix VIII.

42. Soil Corrosivity. Chemical analyses (pH, electrical resistivity, sulfate ion concentration, and chloride concentration) were performed on selected representative samples collected from the borings. The results of these tests are presented in Appendix VI. Table 1 summarizes the results of the tested samples.

TABLE 1: RESULTS OF CHEMICAL TESTING

BORING	SAMPLE NO.	SAMPLE DEPTH IN FEET	pH	RESISTIVITY (OHM/CM)	SULFATE CONCENTRATION (PPM)	CHLORIDE CONCENTRATION (PPM)
B-2	PB-4	6.5 to 8.0	8.6	3,120	7,970	388
B-3	PB-2	0.5 to 2.0	10.2	4,150	None Detected	None Detected

43. Based on the results of the chemical analyses, the sulphate concentration of 7,970 ppm seen in Boring B-2, Sample PB-4 is in the range of severe sulphate exposure (i.e., between 1,500 ppm and 10,000 ppm) in accordance with ACI 318-14, Table 4.2.1. ACI 318 and other applicable codes should be referenced to select the appropriate cement type and concrete mix design requirements. Concrete mix designs for corrosive environments should be furnished by the concrete supplier and reviewed by the structural engineer of record. The maximum chloride concentration was detected as 388 ppm. Additional requirements should be evaluated by the structural engineer.

44. Using guidelines established by the National Association of Corrosion Engineers and the Iron Pipe Research Association, soil resistivity can be used to predict the corrosivity of soils on metal. Ranges of resistivity predicting corrosion potential are shown in Table 2.

TABLE 2: RANGES OF RESISTIVITY TO PREDICT CORROSION

RESISTIVITY, OHM-CM	DESCRIPTION
Below 500	Very Corrosive
500 to 1,000	Corrosive
1,000 to 2,000	Moderately Corrosive
2,000 to 10,000	Mildly Corrosive
Above 10,000	Progressively Less Corrosive

45. The resistivity of the tested samples ranged between 3,120 to 4,150 ohm-cm. Based on these soil resistivities, mildly corrosive soils may be encountered. The structural engineer should evaluate the results of the chemical testing along with the electrical resistivity test results to ensure the pile sections meet project requirements.

46. It should be noted, the soil samples submitted for testing were not preserved or sampled in accordance with environmental sampling standards, as the soil borings and sampling for the project were performed in accordance with typical geotechnical sampling and testing procedures. Additional chemical testing may be required to determine the extent and severity of corrosion potential of the soils at the site.

Fill Settlement

47. Based on furnished information and our borings for the current exploration, we understand approximately 6 feet of fill has recently been placed at the site. The fill materials were placed as layered zones of sand, lightweight aggregate, and crushed limestone. Our settlement analyses are based on layer thicknesses of 3.5 feet of lightweight aggregate, 1.5 feet of sand, and 1 foot of crushed limestone. Total unit weights of 85, 120, and 132 pcf were assumed for the lightweight aggregate, sand, and crushed limestone, respectively. For these settlement analyses, we modeled the fill area as a polygonal load with a length of 720 feet and widths of 214 and 263.5 feet. This area was based on the combined size of Basins C-7 and C-8. Our estimates of settlement assume additional fill placement beneath proposed structures will be minimal and that the groundwater level will generally be maintained at el -2 per the stormwater plan. Based on these assumptions, we estimate settlement of the ground surface near the center of the fill area due to recently placed fill at site to be approximately 9 to 12 inches. The corners and edges of the fill area are generally anticipated to settle approximately 25% and 50%, respectively, of the maximum settlement near the center of the fill area.

48. Our estimates of settlement correlate favorably with the settlement observed in Settlement Plates Nos. 1 and 3 from the settlement survey from Basin C-8. We understand that Settlement Plates Nos. 2 and 4 may have been installed above pile-supported struts, which could account for the lower settlement observed in those plates. The presence of these piles and struts were also not considered in our settlement model and will have some impacts on the settlement behavior within the filled basins.

Areal Subsidence

49. The project area is being affected by ongoing areal subsidence that is the result of past filling, drawdown of groundwater levels due to drainage improvements, and biodegradation of near-surface organic soils subsequent to groundwater drawdown. The amount of future subsidence cannot be reliably estimated from information developed for our report. Subsidence is generally observed to be a relatively uniform ground surface settlement over large areas; however, ongoing areal subsidence can result in differential settlement of grade-supported structures and pavements. Additional settlement of pile-founded structures may also be observed. Areal subsidence can also result in differential settlement magnitudes between grade-supported and pile-supported structures that are larger than what would be estimated by consolidation settlement theory.

LATERAL EARTHEN PRESSURES

50. At-Rest Pressures. Lateral pressures on buried structures should be determined using at-rest lateral earthen pressure coefficients. The lateral earthen pressure coefficients for various materials are listed in Table 3.

TABLE 3: RECOMMENDED VALUES FOR LATERAL EARTHEN PRESSURE COEFFICIENTS

MATERIAL	AT-REST LATERAL EARTHEN PRESSURE COEFFICIENT (K_o)
Granular Structural Fill	0.55
Lightweight Aggregate Fill	0.55
Crushed Stone Fill (610 limestone)	0.45
In-Situ Clay Soils	1.00

51. Active and Passive Pressures. Methodology to determine active and passive pressures for in-situ soils and fill materials is described below. Suggested values for undrained shear strength (cohesion) and effective unit weights are presented below for in-situ soils to the 30-ft depth. Suggested values are also given below for fill materials.

$$P_A = \gamma' H K_A - 2S_U (K_A)^{0.50}$$

$$P_P = \gamma' H K_P + 2S_U (K_P)^{0.50}$$

Where:

P_A = Active pressure in psf

P_P = Passive pressure in psf

S_U = Undrained shear strength or cohesion in psf

γ' = Effective unit weight in pcf

K_A = Active pressure coefficient, refer to Table 4

K_P = Passive pressure coefficient, refer to Table 4

H = Depth in feet

TABLE 4: RECOMMENDED VALUES FOR ACTIVE AND PASSIVE PRESSURE COEFFICIENTS

MATERIAL	S_U = UNDRAINED SHEAR STRENGTH IN PSF	ANGLE OF INTERNAL FRICTION ϕ IN DEGREES	γ = TOTAL UNIT WEIGHT IN PCF	ACTIVE PRESSURE COEFFICIENT (K_A)		PASSIVE PRESSURE COEFFICIENT (K_P)	
				LONG TERM	SHORT TERM	LONG TERM	SHORT TERM
Structural Sand Fill	0	30	120 (58)[1]	0.33	0.36	3.00	2.77
Lightweight Aggregate Fill	0	30	85 (23)[1]	0.33	0.36	3.00	2.77
Crushed Stone Fill	0	32	132 (68)[1]	0.31	0.36	3.25	2.77
In-Situ Clay Soils 6 to 13.5 Feet BGS[2]	300	0	86 (24)[1]	0.44	1.00	2.28	1.00
In-Situ Clay Soils 13.5 to 21 Feet BGS[2]	200	0	75 (13)[1]	0.44	1.00	2.28	1.00
In-Situ Clay Soils 21 to 30 Feet BGS[2]	290	0	104 (42)[1]	0.44	1.00	2.28	1.00

[1] Effective (i.e., buoyant) unit weight, γ'
[2] BGS = below existing ground surface

Deep Foundations

52. Allowable Pile Load Capacities. Engineering analyses have been made to estimate allowable compressive and tensile pile load capacities for various sizes and embedments of treated ASTM D25 quality timber piles, SPC piles, OSP piles, and ACIP concrete piles. The results of our analyses are shown on Figures 4 through 7. These estimates of capacity assume certain restrictions on installation methods (outlined subsequently) and do not address risks associated with pile damage during installation as well as other considerations for this site. Our allowable load capacities neglect the capacity within the upper 2 feet below the ground surface for embedment within the pile cap or grade beam (if utilized) and assume pile installation is vertical. Actual pile lengths should be determined based on the finished grade elevation. The installation requirements should be assessed during the test pile program as addressed subsequently in this report.

53. Allowable Pile Load Capacities for Helical Piles. Analyses were performed to estimate the allowable compressive capacities for various plate diameters. Helical steel piles should be installed by qualified personnel experienced in this type of foundation. Installation torque may be used to estimate capacity in individual piles at the time of installation; however, use of a factor of safety of 2.0 assumes a static load test will be performed. A factor of safety of 3.0 should be utilized if a static load test is not performed. The results of the analyses are summarized in the following table.

TABLE 5: ESTIMATED SINGLE PILE LOAD CAPACITIES FOR HELICAL PILES

HELIX INSTALLATION DEPTH IN FEET	HELICAL PLATE DIAMETERS IN INCHES	ESTIMATED ALLOWABLE COMPRESSION LOAD IN TONS (FACTOR OF SAFETY ≈ 2.0)
30	10	1.5
	12	2.0
	14	3.0
90	10	6.0
	12	8.5
	14	11.0

54. Factor of Safety. The allowable pile load capacity estimates presented on Figures 4 through 7 contain a factor of safety of 2.0 against failure of a single pile through the soil and assume installation requirements and our capacity estimates will be verified with the installation of probe piles and performance of static load testing. As an alternative, dynamic pile testing (DPT) may be performed to confirm the estimated load capacities for driven SPC or OSP piles. This testing method requires a structural design based on a factor of safety of 2.5. A factor of safety of 3.0 should be utilized if no load testing is performed. Note, however, we still recommend the installation of probe piles for this site (regardless of selected factor of safety and planned testing) to evaluate installation requirements and risks. Likewise, DPT is also beneficial in evaluating pile integrity, not just factor of safety.

A one-third increase in vertical load can be used when evaluating temporary loads as allowed by applicable codes and appropriate testing.

55. Timber Piles. We recommend the treatment of timber piles meet the current American Wood Preservers Association's Standards as outlined in Section 1014 of the LSSRB for both preservative and quality assurance. Treatment should also follow Section 812.06 where applicable. Furthermore, we recommend the timber piles meet the quality (clean peeled, straightness, etc.) requirements outlined in ASTM D25 and size requirements outlined in Table X1.5 of ASTM D25 for specified tip circumferences. The pile dimensions assumed in our analyses are presented on Figure 4. These estimates of capacity are for new piles driven from current grades and do not attempt to estimate the capacity of the existing timber piles underlying areas of the former basin.

56. Square, Precast Concrete Piles. We recommend SPC piles meet the requirements outlined in Section 805.09 of the LSSRB. SPC piles should be designed to have a strand prestress structurally sufficient to facilitate handling and driving of the piles without damage. The risk of damaging SPC piles is high for this site and installation requirements will need to be evaluated and tested if this pile type is considered for the project. Our analyses are based on a solid square pile. Alternate precast pile configurations (pipe, triangle, etc.) should be further evaluated. The pile dimensions assumed in our analyses are provided on Figure 5.

57. Open-End Steel Pipe Piles. We recommend the OSP piles meet the requirements outlined in Sections 804 and 1013.11 of the LSSRB. The steel piles should be designed to have wall thicknesses structurally sufficient to withstand handling and driving stresses. The pile dimensions assumed in our analyses are based primarily on the outside pile diameter. The actual wall thickness selected for the open-end pile will generally not affect our estimated vertical capacities; however, if a closed-end pile is considered, Eustis

Engineering should evaluate the effect on the capacity and drivability. The pile dimensions assumed in our analyses are provided on Figure 6.

58. Protrusion of Connections or Welds. Pile connections that protrude beyond the surface of the outside wall of OSP piles reduce the frictional resistance acting on the pile surface above the protrusion. For this reason, your specifications should require all welds to be machined and/or ground such that no more than a 0.125-in. protrusion is present. This includes machined bead thicknesses for spiral weld OSP piles and manual full penetration segmented pile section welds as well as splice collars. If the welds or splice collars protrude past the pile's outside dimensions, the soil-pile adhesion is disturbed during installation of the pile, and the pile's capacity may be reduced. Likewise, SPC splices should be contained within the pile section.

59. Augered Cast-In-Place Piles. As indicated on Figure 7, an actual pile volume or "adjusted volumetric overtake," as described subsequently, of 20% over theoretical was assumed to estimate the presented capacities. The actual pile volume will differ from the total volume of grout used to construct the pile. A more representative pile grout volume, termed "adjusted volumetric overtake," can be estimated and considers grout observed exiting the top of the augered hole during pile construction. The depth of the auger tip at which the grout is observed exiting the top of the pile is termed "grout return depth." Deeper grout return depths yield higher total grout volumes and subsequent higher volumetric overtake percentage estimates when based on total grout volume pumped. The presence of the significant granular fill within the upper portion of the site/pile and presence of high-water table and site configuration challenges for dealing with grout overtake disposal will require careful consideration and use of a highly qualified contractor to make this a competitive pile type for this site. Use of augercast piles may also negatively impact the stormwater retention design.

60. Quality control testing must be used to confirm minimum adjusted volumetric overtakes and installation requirements are being satisfied. These estimated capacities also assume standard installation methods will be utilized. Standard installation methods are defined here as the use of a single, continuous-flight, hollow shaft auger to produce the pile such that the spoils will be removed. Should positive displacement augercast piles (those where the drilling materials remain in the hole) be considered for the project, additional analyses should be performed to estimate allowable pile capacities for an anticipated reduced volumetric overtake and limiting depth. Recommendations for integrity testing, including minimum reinforcing, are outlined subsequently.

61. Helical Piles. Helical steel piles selected for construction should be capable of resisting the design compressive loads and the anticipated torque during installation. Furthermore, the shaft should be of sufficient size to resist buckling in soft to medium stiff gray and tan fat clay or lean clay encountered in the boring due to the design load. There are various types of helical pile segment connections; therefore, the potential movement at each segment connection should be considered and made as rigid as possible to minimize movement within the pile while in service. Due to "slack" in joints, potential movement connections have been known to result in unanticipated vertical displacements. These factors should be considered in the configuration of the piles. Eustis Engineering may be contacted to review pile selection and installation procedures.

62. Pile Weight. The pile capacity estimates we present do not include the weight of the pile. When computing the resultant net compressive capacity of SPC and ACIP piles, a net load of 35 pcf may be used for the weight of the concrete (weight of the concrete minus the weight of soil removed). The full buoyant weight of the concrete of 87 pcf may be used to determine the tensile capacity of the pile, provided the pile is designed to transmit these loads. Similar methods may be utilized for timber or steel piles.

63. Structural Capacity. Analyses for pile capacities are based only on a soil-pile relationship; therefore, the structural capacity of the piles and their connections to transmit these loads should be determined by a structural engineer.

64. Pile Group Capacity. Piles with pile tips above approximate el -80 and all ACIP piles will derive a significant portion of their vertical capacity from skin friction; therefore, it is necessary to consider the effect of group action for these piles. In this regard, the supportive compressive and tensile value of the piles driven in groups should be investigated on the basis of group perimeter shear by the formula shown on Figure 8. For group effects on tensile capacities, the second term of the equation should be neglected. Piles firmly embedded in the medium dense sand deposits encountered below approximate el -80 to el -90 will derive a significant portion of capacity from end bearing and no reduction in group capacity will be anticipated as necessary.

65. Pile Group Spacing. The minimum center-to-center pile spacing within a row or group of piles should be at least 3 feet, 3 pile diameters, or by the minimum spacing formula shown on Figure 9, whichever is greater. The minimum spacing between rows or groups of piles should also meet the requirements discussed below regarding settlement. Pile spacing requirements may not minimize influence of individual piles on each other with respect to lateral load resistance, settlement, or vertical group capacity.

66. Design Parameters for Lateral Load Analyses. Design parameters for use with the computer programs LPILE for Windows and GROUP® by Ensoft, Inc., to evaluate soil-pile interaction of laterally-loaded piles are tabulated on Figure 10. Included are estimates of soil type for use with the aforementioned Ensoft programs. The determination of soil type within these programs is subject to engineering judgment and the experience of the engineer performing the analyses. We recommend sensitivity analyses be performed with these soil types to verify the assumptions used in the analyses are appropriate for

the project. Note, these design parameters should only be used for soil-pile interaction analyses for laterally-loaded vertical piles. If other analyses are required, Eustis Engineering should be notified to determine the suitability of these parameters for other analytical applications.

67. Soil Response of Single Piles to Lateral Loads. Analyses were performed to evaluate the effects of lateral loads on individual OSP piles. Our analyses were performed using the computer program LPILE for Windows, Version 2019-11.09.

68. Lateral Load Analyses – Design Assumptions. For these analyses, we have assumed cyclic loading conditions and utilized an elastic section (non-yielding). Steel for the piles was assumed to have an elastic modulus of 29,000 ksi. Our analyses assumed the lateral loads were applied at the top and center of the pile at grade. Our analyses consider lateral loads that would result in deflections of 0.125, 0.25, 0.375, and 0.5 inch. Vertical compressive loads acting on the piles were based on our estimates of pile capacity with a tip embedment 90 feet below the ground surface. We evaluated both free-head and fixed-head conditions. A pile head that is free to rotate is sometimes referred to as "pinned" condition. This model provides restraints against translational movements without restraint against rotational movement. A fixed pile head condition provides restraints against all directions of movements, and this assumption is dependent on the pile fixity within the cap. Should these assumptions not be valid, Eustis Engineering should be contacted to revise our analyses.

69. Lateral Load Analyses – Results. A summary of the results of our analyses are provided on Figure 11. Plots of deflection, bending moment, and shear force from the analyses for laterally-loaded, single OSP piles are provided in Appendix IX.

70. The analyses performed are for laterally-loaded single piles or piles installed in groups widely spaced relative to the direction of lateral loading. Limitations to our results are

necessary since we referenced unfactored soil parameters (friction angles, undrained shear strengths, and lateral strain factors) in our analyses. Appropriate factors of safety should be applied by the structural engineer. If other loading conditions or complex group configurations are planned, or if the assumptions made for these analyses are invalid, Eustis Engineering should be consulted to provide additional lateral load analyses. The analytical tools used for analyses of laterally-loaded piles are intended to predict the soil response to laterally-loaded piles and are not to be used independently for structural analyses of the piles.

71. Reduction Factors for Lateral Group Effects. Evaluation of lateral loads applied to a single pile do not account for the effects of pile groups. Group effects (sometimes referred to as shadowing) will reduce lateral pile capacity if piles are spaced closer than 7 pile diameters center-to-center in the direction of loading. For pile group spacings closer than 7 pile diameters in the direction of lateral load, reduction factors should be applied to the sum of the horizontal loads in the direction of lateral loading. These reduction factors, known as p-multipliers, are presented in Table 6. For piles spaced a minimum of 5 pile diameters apart in the direction perpendicular to lateral loading, there is no reduction for interaction among adjacent piles during lateral loading. For piles spaced a minimum of 3 pile diameters apart in the direction perpendicular to lateral loading, a reduction factor of 0.8 should be applied to the sum of the horizontal loads in the direction of lateral loading.

TABLE 6: REDUCTION FACTORS FOR LATERALLY-LOADED PILE GROUPS

PILE SPACING IN DIRECTION OF LATERAL LOADING	GROUP REDUCTION FACTORS FOR LATERAL LOADS	
	LEADING PILES	TRAILING PILES
7.0 Diameters	1.00	1.00
6.0 Diameters	1.00	0.93
5.5 Diameters	1.00	0.90
5.0 Diameters	1.00	0.84
4.5 Diameters	0.97	0.78
4.0 Diameters	0.96	0.71
3.5 Diameters	0.93	0.65
3.0 Diameters	0.90	0.58

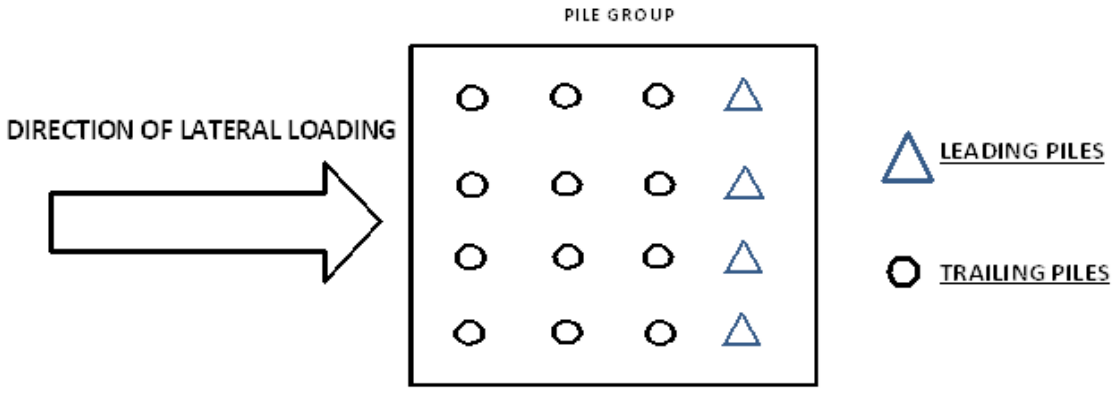

72. Limitations to Lateral Response Analyses. The estimated deflections and corresponding lateral loads and maximum bending moments are unfactored (factor of safety ≈ 1.0). Connections required to transmit the furnished loads to the proposed foundations should be determined by a structural engineer licensed in the State of Louisiana with a suitable factor of safety for structural components. The necessity of a lateral load test should also be determined by the structural engineer based on the factors of safety for the structural components, magnitude of the peak loads evaluated in these analyses compared to

typical service loads, and allowable deflection for the foundations. The results of these analyses should be reviewed by the structural engineer of record to ensure the design requirements have been met. If any of our assumptions are invalid, Eustis Engineering should be notified to revise our lateral load analyses.

73. Batter Piles. The estimated pile capacities provided in Figures 4 through 6 are for piles installed vertically and may be used to determine the load capacities for batter piles. We do not recommend installation of ACIP piles on a batter, particularly through the fills present at this site. The vertical component of a batter pile will be equal to the capacity for a vertical pile installed to the same tip elevation. From this relationship, geometry may be used to determine the axial capacity and horizontal component of the batter piles. This geometric relationship is shown on Figure 12.

74. Estimated Single Pile Settlement due to Structural Loads. We estimate single piles installed to tip embedments greater than 40 feet below the existing ground surface will settle ¼ inch or less due to sustained structural loads. These estimates do not include elastic deformation of the piles, which should be added to the settlement estimate. Elastic deformation of the friction piles may be estimated as 67% to 75% of the static column strain of a pile acting as a column. ***Settlement due to structural loads is also additive to settlement due to fill placement.***

75. Our estimates of settlement of single piles assume piles will be installed in small groups or widely spaced rows, the largest group dimension will be no greater than 20% of the pile length, and the center-to-center spacing between groups will be no closer than twice the largest group dimension. We have assumed the center-to-center spacing between rows of single piles will be no closer than 8 feet or 9 pile diameters, whichever is greater.

76. Pile Settlement Estimates due to Fill Placement. As the previously placed fill settles from consolidation of the underlying subsoils, negative skin friction (drag load) is induced on

the piles as the soil settles along the pile. These drag loads will result in additional pile settlement. We have evaluated pile settlement due to the placement of approximately 6 feet of fill as discussed previously. We present our estimates of pile settlement due to 6 feet of fill in the Table 7. ***These estimates of settlement should be considered additive to pile settlement due to structural loads.*** Note, these estimates assume additional fill below the structures will be minimal. Filling at the site in excess of 6 feet may cause additional drag load and drag settlement on both existing and new pile foundations. Contact Eustis Engineering for further consultation should your design require fill placement in excess of 6 feet.

TABLE 7: ESTIMATED SETTLEMENT OF PILES DUE TO FILL SETTLEMENT

PILE TIP EMBEDMENT BELOW THE EXISTING GROUND SURFACE (IN FEET)	ESTIMATED LONG-TERM PILE SETTLEMENT DUE TO FILL PLACEMENT (IN INCHES)
30	3 to 4
40	1½ to 2½
50	1 to 2
60	¾ to 1½
70	¾ to 1¼
80	½ to 1
90	¼ to ¾
100	¼ or Less

77. Differential Settlement. Your design should recognize the potential for differential settlement between pile-supported features and grade-supported features. A joint considering vertical movements should be provided between any grade-supported and pile-supported features to accommodate potential differential settlement. In addition, the structures should be designed as rigid as possible to minimize the potential for differential settlements.

Installation of Driven Piles

78. Quality Control. All pile driving operations should be supervised by experienced personnel to ensure proper procedures are followed and accurate records are kept during all pile driving operations. The driving records should include the date, type of pile, pile size (tip and butt diameters, side dimensions, and wall thickness), weld times, overall pile length, hammer model, driving energy, depth and diameter of predrill, number of passes of predrill bit, and number of blows per foot of penetration for the full embedment of the pile. An accurate driving record is especially important to verify piles are installed to the required tip embedment and to give an indication of any unusual driving characteristics which may include pile breakage. We recommend Eustis Engineering be retained to observe, record, and evaluate all pile driving operations with respect to the recommendations presented in this report.

79. Air Hammers. Treated, ASTM D25 quality timber piles, having minimum tip diameters of 7 inches and minimum butt diameters of at least 12 inches, may be driven with a single-acting air hammer having a manufacturer's rated energy of 15,000 ft-lbs per blow. For these piles, the ram weight should not exceed 5,000 pounds and the maximum stroke should be limited to 3 feet. Using this driving energy, timber piles should be driven no harder than 25 blows per foot (refusal) to minimize structural damage to the piles. Additional refusal criteria should be developed during the test pile program.

80. We recommend a single-acting air hammer be used to install the SPC and OSP piles. The manufacturer's rated energy required to drive the piles can generally be correlated to the piles' allowable compressive capacity to develop cost estimates; however, we recommend drivability analyses be performed to evaluate the proposed driving system. A tabulation of the estimated hammer energy versus allowable compressive capacity

(factor of safety ≈ 2.0) is provided in Table 8. For SPC piles, we also recommend the hammer weigh one-third to one-half of the weight of the pile.

TABLE 8: RECOMMENDED SINGLE-ACTING AIR HAMMER DRIVING ENERGIES

ESTIMATED ALLOWABLE SINGLE PILE LOAD COMPRESSIVE CAPACITY ASSUMING FACTOR OF SAFETY ≈ 2.0 IN TONS	APPROXIMATE RATED SINGLE-ACTING HAMMER ENERGY IN FT-LBS/BLOW
Up to 60	19,500
60 to 120	24,000
120 to 180	32,500

81. Alternate Hammers. A diesel or hydraulic hammer may also be used for the installation of concrete or steel piles. We recommend a diesel hammer have a rated energy of one and one-half times the energy recommended for a comparable installation with a single-acting air hammer. Similarly, a hydraulic hammer should have a rated energy that is equated to the air hammer based on efficiency. Other impact hammer types may also be suitable for pile impact installation.

82. Drivability and Hammer Approval. We recommend dynamic analyses be performed for hammer selection and approval. In addition, DPT should be conducted if a diesel hammer or other variable energy hydraulic hammer is proposed for installing concrete piles. This testing will reduce the risk of overstressing the piles which can occur during soft driving (i.e., excessive tensile stresses can develop when concrete piles advance rapidly through soft soils, particularly when driven by a diesel hammer). DPT is also recommended for all SPC pile installations at this site due to the high risk of pile damage due to potential obstructions.

83. Alternate Installation Methods. We do not recommend vibratory methods be utilized for pile installation. If a vibratory hammer or any other alternate installation methods are

selected for the project, Eustis Engineering should be contacted to evaluate the reduction in the estimated allowable pile load capacities presented herein.

84. Predrilling. Predrilling should be performed to minimize vibrations, identify obstructions, or to penetrate near-surface crusts or fill soils or any remnant slabs. Shallow predrilling may be performed by dry auger methods to depths of 6 to 8 feet below grade. Dry auger predrilling should be performed with the auger bit diameter sized no larger than the butt diameter of timber piles and 75% of the side dimension of SPC piles. Deeper predrilling is anticipated for timber and SPC piles with embedments over 50 feet to penetrate the medium dense sands from el -42 to -47. Deeper predrilling should be performed by wet rotary methods. For deeper predrilling, the drill bit should be sized no larger than the tip diameter for timber piles or 75% of the side width for SPC piles. In all cases, piles should have a final embedment a minimum of 10 feet beyond the predrill depth. Actual requirements for predrilling should be determined during performance of a test pile program. If larger diameter predrill bits are implemented to avoid obstructions and pile damage, Eustis Engineering should be contacted to assess the reduction in the estimated vertical and lateral pile capacity estimates we present.

85. Refusal. Displacement piles (such as square, precast concrete piles) may achieve early refusal when installed within dense sand deposits below approximately el -90. Determination of pile refusal should be evaluated during the test pile program. The potential for early refusal should be considered when evaluating installation of displacement piles.

86. Dynamic Analyses. The SPC and OSP piles should be designed by a structural engineer to have a cross-section which is structurally sufficient to facilitate driving of the piles without damage. Dynamic analyses (WEAP) can be performed to evaluate driving stresses, pile cushion, and drivability once the hammer and appurtenant equipment have been

selected. Structural requirements can then be verified by a structural engineer and installation criteria can be established. Eustis Engineering recommends hammer approval by WEAP analyses in accordance with Section 804.05.02 of the LSSRB.

87. Pile Installation Sequence. Timber piles and SPC piles are considered displacement piles because soil is displaced laterally when the piles are driven into the subsurface. These piles could cause adjacent piles to refuse at shallower depths or, more likely, could result in heaving of piles that were previously installed. For these reasons, we recommend pile driving take place from the center of foundations working outward, as described in Section 804.07.5 of the LSSRB.

INSTALLATION OF ACIP PILES

88. Quality Control. Successful installation of ACIP piles will be a direct function of the quality control used at the site and means and methods employed by the contractor. At a minimum, quality control should include the checking of the mix, fluidity, and temperature; the use of additives; and the taking of samples for subsequent compression strength testing. The quality of grout mix used for the piles should be monitored using ASTM C109 procedures. Fluidity may be checked by using modified U.S. Army Corps of Engineers' Specification CRD C79 and ASTM C939. Flow rates should be in the range between 10 and 25 seconds using a flow cone modified to have a 0.75-in. opening.

89. Quality control during pile installation should include records for each pile installed. Prior to installation of any grout, the grout pump should be calibrated in units of volume per stroke. During installation, grout pressure and volume should be recorded by flow meter and pressure meter (supplied by the pile installation contractor) in addition to recording pump strokes. The flow meter should be capable of providing the total and incremental volume of grout pumped. We recommend a maximum increment of 5 feet be implemented for the meters and manual methods. The grout return depth should be

recorded on the installation records and the adjusted grout volume estimated based on this depth. Finally, the theoretical volume of grout should be compared to this adjusted grout volume for each pile to determine the percent over theoretical volume. Eustis Engineering should be contacted if the volume of grout placed for any segment is less than 120% of the theoretical volume. Based on our experience, adjusted volumetric overtakes greater than 20% should be anticipated for standard installation methods. Deeper grout returns yield higher total grout volumes and subsequent volumetric overtake percentages when based on total grout volume pumped or total volumetric overtake. Generally, a total volumetric overtake of at least 135% with a grout return depth of 5 to 10 feet will result in an adjusted grout overtake of at least 120%.

90. Equipment and Techniques. ACIP piles should be made by rotating a continuous flight hollow shaft auger into the ground to the necessary depth in order to develop the desired load capacity. The auger flighting should be continuous without gaps or breaks and should have a uniform diameter throughout its length. Should ACIP pile lengths exceed 40 feet, we recommend a middle guide be used. Adjacent piles should not be installed until the piles have set for a sufficient period, as determined by the structural engineer, to withstand earthen pressures exerted by the installation process. Normally, a minimum 24-hour set time is recommended.

91. For placement of reinforcing steel, a minimum distance of 3 inches is recommended between the reinforcing bar and outer edge of the piles. If reinforcing cages are used, they should be centered in the borehole using centralizers or other systems. Cross-bracing within the reinforcing cage should not be allowed in order to minimize the potential for void development in the concrete.

92. The grout should be designed to provide an adequate strength to support the anticipated design load. The grout head should be 5 feet higher than the fluid levels in the borehole

and/or the bottom of the auger at all times. The grout should be placed continuously from bottom to top while the auger rotates during withdrawal.

93. Integrity Testing. To ensure successful installation of augercast piles, the test piles and a selected percentage (typically 2% to 5%) of job piles should be subjected to integrity testing comprising Thermal Integrity Profiling™ or single-hole sonic logging (SSL). If these tests or installation records reveal structural defects or anomalies, additional quality control tests, consisting of TIP, SSL, or low strain integrity methods, including pile integrity testing (PIT), may be required. TIP should be performed in accordance with ASTM D7949-14 by either the probe method or thermal wire method. SSL testing should comply with ASTM D6760-16 and in general accordance with Section 803.05.11 of the LSSRB. PIT should be performed in accordance with ASTM D5882-16. Note, PIT typically does not provide accurate results below 40 pile diameters.

94. TIP and SSL methods require installation of an access tube (typically PVC) or wires (thermal wire method) and therefore must be coordinated prior to construction. We have assumed all augercast piles will have a full-length center reinforcing bar that can be used for testing purposes for attachment of the access tube or thermal wire. These tests must also be performed within a specific time frame to maintain their accuracy. The thermal wire method requires cable(s) fitted with uniformly spaced temperature sensors to be installed on the center reinforcing bar and/or the reinforcing cage prior to placement into the pile. Temperature data are then collected at selected intervals during the concrete grout hydration process. For the access tube method for TIP or SSL, the access tube should be free of debris and other obstructions, and the outside of the PVC tube should be made coarse to aid in the bonding with the concrete grout. Immediately upon completion of installing the pile, the PVC tube should also be filled with water when the SSL method will be used in order to minimize debonding of the concrete to the surface of the PVC tube. Debonding of concrete to the PVC tube may show as false anomalies

during SSL testing. A dry access tube is utilized for the probe method for TIP testing; debonding is not an issue for this method.

95. We do not recommend forcing the cage or instrumented center bars into place with the use of heavy equipment nor do we recommend twisting the instrumented center bars into place. Should the reinforcing steel not extend to the recommended depth due to anomalies indicative of soil "cave-ins," the pile should immediately be redrilled until the center bar can be installed full depth without force. If the cave-ins appear to be a result of grout water loss in cohesionless soils, we recommend consideration be given to the use of a grout intrusion aid admixture such as Intrusion-Aid™ MAX by Specrete-IP Incorporated or an approved equivalent.

PROBE PILES, TEST PILES, AND LOAD TESTS

96. Eustis Engineering considers a test pile program and load test as an extension of our geotechnical exploration; therefore, Eustis Engineering should be retained to perform these services. The actual number of probe/test piles should be determined based on the number and type of piles used in the foundations. The probe piles should provide good coverage across the footprint of the proposed additions and assess potential obstructions and installation challenges. The probe piles may be installed at job pile locations unless alternate pile embedments are being evaluated as part of the program. Eustis Engineering and the structural design engineer should agree on appropriate locations for probe piles. Eustis Engineering and the structural engineer should also evaluate probe pile data to select probe piles to be statically load-tested.

97. The probe piles should be the same type and embedment anticipated for the job piles and installed with the same equipment and techniques proposed for the job piles. The probe piles should be used to evaluate installation methods. Driven probe piles will provide more definitive information regarding the anticipated driving resistance,

vibrations from pile driving, and requirements for predrilling. Augered probe piles will provide information relative to anticipated overtake volumes.

98. The test piles should be allowed to set for at least 14 days after the installation of the reaction system for friction piles or at least 7 days subsequent to the installation of the reaction system for end bearing piles. The structural and geotechnical engineers should select the piles to be used for performance of a static load test. The piles should then be load-tested to failure in accordance with ASTM D1143 and the Building Code of the City of New Orleans, assuming the governing load case is the compressive capacity. Job piles may also be subjected to tension and lateral loads; therefore, it may also be necessary to perform tension (ASTM D3689) and/or lateral (ASTM D3966) static load tests on selected test pile(s). The results should be evaluated by Eustis Engineering to verify the estimated pile load capacities presented in this report.

99. Dynamic Pile Testing. The initial installation of driven SPC and OSP test piles and job piles may be monitored and evaluated using DPT with a Pile Driving Analyzer® (PDA). The performance of DPT may be used to evaluate actual driving stresses, penetration of resistance, and integrity and capacity of the test piles and/or job piles. The PDA can also monitor energy transferred to the pile from the hammer and evaluate installation efficiency. In order to evaluate pile capacity, "restrike" DPT should be performed at least 14 days after its initial installation of friction piles or 7 days after the initial installation of end bearing piles. Shorter set times may be considered but the ultimate capacity of the pile may not be realized. In addition, an increased hammer energy may be required for restrike DPT to fully mobilize the pile. Data from this restrike should be further evaluated by signal matching verification of the computed capacity at the time of testing by CAPWAP® analyses. Eustis Engineering is available to perform and evaluate the results of DPT and CAPWAP analyses. If a PDA is used as the sole means to evaluate capacity to establish allowable capacities, the factor of safety should be increased from 2.0 to 2.5.

Inspection and Monitoring of Existing Structures

100. Construction activities and methods in tightly congested areas will affect adjacent structures, pavements, or utilities. These affects are usually associated with vibrations (as discussed subsequently), dewatering, and excavations (if performed). Prior to construction operations, it is recommended the existing C-5, C-6, and L-1 basins and any existing structures, pavements, and utilities near the proposed project be thoroughly inspected to establish their existing condition. A sufficient number of photographs of the surrounding structures should be taken prior to construction to accompany these inspections. The inspection should also include level surveys to establish the relative positions of existing features. Crack monitoring using telltales may also be advisable depending on the findings of the pre-construction surveys. Construction monitoring should include vibration monitoring and possibly acoustic monitoring.

101. A more detailed risk analysis regarding the impact of the proposed construction should be performed during the final design. As part of the risk analysis, the existing project features should be thoroughly inspected and evaluated as discussed above; however, regardless of the outcome of the risk analysis, the recommended monitoring program should still be undertaken during construction. This monitoring should be evaluated daily to further evaluate the impacts of construction and changes in the risk assessment. It may be necessary to modify construction methods if the monitoring indicates unacceptable levels of damage.

Vibrations

102. Demolition activities, pile installation, and other construction operations can cause vibrations that may affect nearby structures, pavements, and underground utilities. Damage due to construction vibrations is usually associated with the installation of piles and the movement of construction equipment, particularly heavy trucks and cranes. In

consideration of this potential, we recommend vibrations be monitored by measurement of peak particle velocities at structures, pavements, and utilities of concern. Monitoring should be performed with a seismograph. The record of peak particle velocities will provide essential information by judging potential damage and the type of changes best suited for project requirements.

103. There is a wide range of opinion on appropriate criteria, and vibration levels are not codified in the New Orleans area. The generally accepted standard is to limit vibrations without frequency considerations to continuous levels between 0.25 and 0.5 in./sec. The intent is to limit the potential for cosmetic damage (i.e., cracks in walls, masonry veneers, tiles, etc.), and for the potential of densification of very loose to loose cohesionless and semi-cohesive materials. Recent compilations of vibration criteria list higher levels to assess the potential for structural damage limiting the serviceability of structures. Finally, historically significant buildings or structures have been given special consideration in some areas. In reference to the preservation of these structures and buildings, requirements have been limited to peak particle velocities of 0.1 in./sec.

104. In general, monitoring of cosmetic damage should encompass areal limits at least 200 feet from the potential source of vibrations. Monitoring activities for levels associated with densification of very loose to loose sands and to protect historically significant structures should be extended to 500 feet from the vibration source. Pre-construction surveys should be undertaken to assess existing conditions of structures and to identify critical structures. These surveys should extend to the limits cited previously in this paragraph.

105. Eustis Engineering should be consulted to establish, in conjunction with the designer and the owner, vibration and monitoring limits appropriate to the project. Once means and methods of construction are established by the selected contractor, Eustis Engineering

should be consulted to recommend construction procedures that reduce vibration levels and mitigate the potential for vibration damage.

ADDITIONAL ENGINEERING ANALYSES FOR DESIGN

106. Based on our understanding of the project scope, additional geotechnical engineering analyses beyond the scope of this report are likely required for design. This may include deep-seated stability, local stability, and settlement for the proposed retaining wall; evaluations of settlement for the proposed earthen ramp; and analyses related to potential excavations for strut removal. Eustis Engineering should work in close collaboration with Power, Volkert, and Jacobs to provide a scope of service to evaluate these proposed and/or potential project features.

GEOTECHNICAL SERVICES DURING CONSTRUCTION

107. In order to provide continuity among the investigation, design, and construction phases, Eustis Engineering should be retained to review plans and specifications developed for the project and all contractor submittals related to geotechnical issues and foundations. Eustis Engineering can provide additional geotechnical services which may include consultation during design and construction. These services may also include consultation during design and construction, testing and approval of proposed fill materials, witnessing of proofrolling, visual inspection of excavations, and any other soils and materials testing services. Eustis Engineering can also monitor vibrations; log the installation of probe/test piles and job piles; perform DPT; perform and evaluate static and dynamic load tests; and perform and evaluate integrity tests for ACIP piles [TIP, SSL, crosshole sonic logging (CSL), or PIT].

108. Eustis Engineering should be retained to monitor the geotechnical related work performed by the contractor. This permits the geotechnical engineer who prepared the

report to be on hand and quickly evaluate unanticipated conditions; conduct additional tests, if required; and, when necessary, recommend alternative solutions to problems. This is recommended to avoid major construction cost overruns or contractual disputes on the project.

LIMITATIONS

109. Eustis Engineering has provided engineering services in accordance with generally accepted geotechnical engineering practices in this locality at this time. No warranty or guarantee is expressed or implied.

110. This report has been prepared in accordance with generally accepted geotechnical engineering practice for the exclusive use of Power, for specific application to the subject site. In the event of any changes in the nature, design, or location of the proposed construction, the conclusions and recommendations contained in this report will not be considered valid unless the changes are reviewed, and the conclusions of this report are modified and verified in writing. Should these data be used by anyone other than Power, the user should contact Eustis Engineering for interpretation of data and to secure other information which may be pertinent to the project.

111. The analyses and recommendations contained in this report are based, in part, on data obtained from soil borings, laboratory testing, and SCPT sounding performed for the subject project, supplemented by existing geotechnical data. The boring logs and SCPT record are considered representative of subsurface conditions at the boring and SCPT locations on the dates completed. No warranty is given that the boring logs or SCPT record are representative of subsurface conditions at other locations or times. The nature and extent of variations in subsurface conditions, between and away from the boring and SCPT locations, may not become evident until construction. If such variations appear, it will be necessary to reevaluate the recommendations contained in this report.

112. Recommendations and conclusions contained within this report are to some degree subjective, having partial basis in engineering judgment and experience particular to the design engineer. For this reason, this report should not be included in its entirety in the contract plans and specifications without addressing the limitations of its use; however, the results of the soil borings, laboratory tests, and SCPT record contained in the Appendices of this report may be included in the plans and specifications. The construction contractor will then be obliged to make an independent interpretation of subsurface conditions at the site and their potential impact on means and methods used to achieve the plans and specifications.

113. This report is issued with the understanding that the owner or the owner's representative has the responsibility to bring the information and recommendations contained herein to the attention of the project engineer to ensure they are incorporated into the plans and specifications for the project. The owner or the owner's representative also has the responsibility to take the necessary steps to see that the general contractor and all subcontractors follow such recommendations. It is further understood that the owner or the owner's representative is responsible for submittal of this report to the appropriate governing agencies.

114. The scope of our service does not include an environmental assessment or an investigation for the presence or absence of wetlands and hazardous or toxic materials in the soil; surface water; groundwater; or air on, below, or adjacent to the subject property. Furthermore, the scope of service does not include the investigation or detection of biological pollutants at the site. The term "biological pollutants" includes but is not limited to molds, fungi, spores, bacteria, viruses, and the byproducts of any such biological organisms.

115. Eustis Engineering should be provided the opportunity for a general review of the final design plans and specifications in order that preliminary earthwork and foundation recommendations may be properly interpreted and implemented in the design and specifications. If Eustis Engineering is not accorded the privilege of making this recommended review, we can assume no responsibility for misinterpretation of our recommendations.

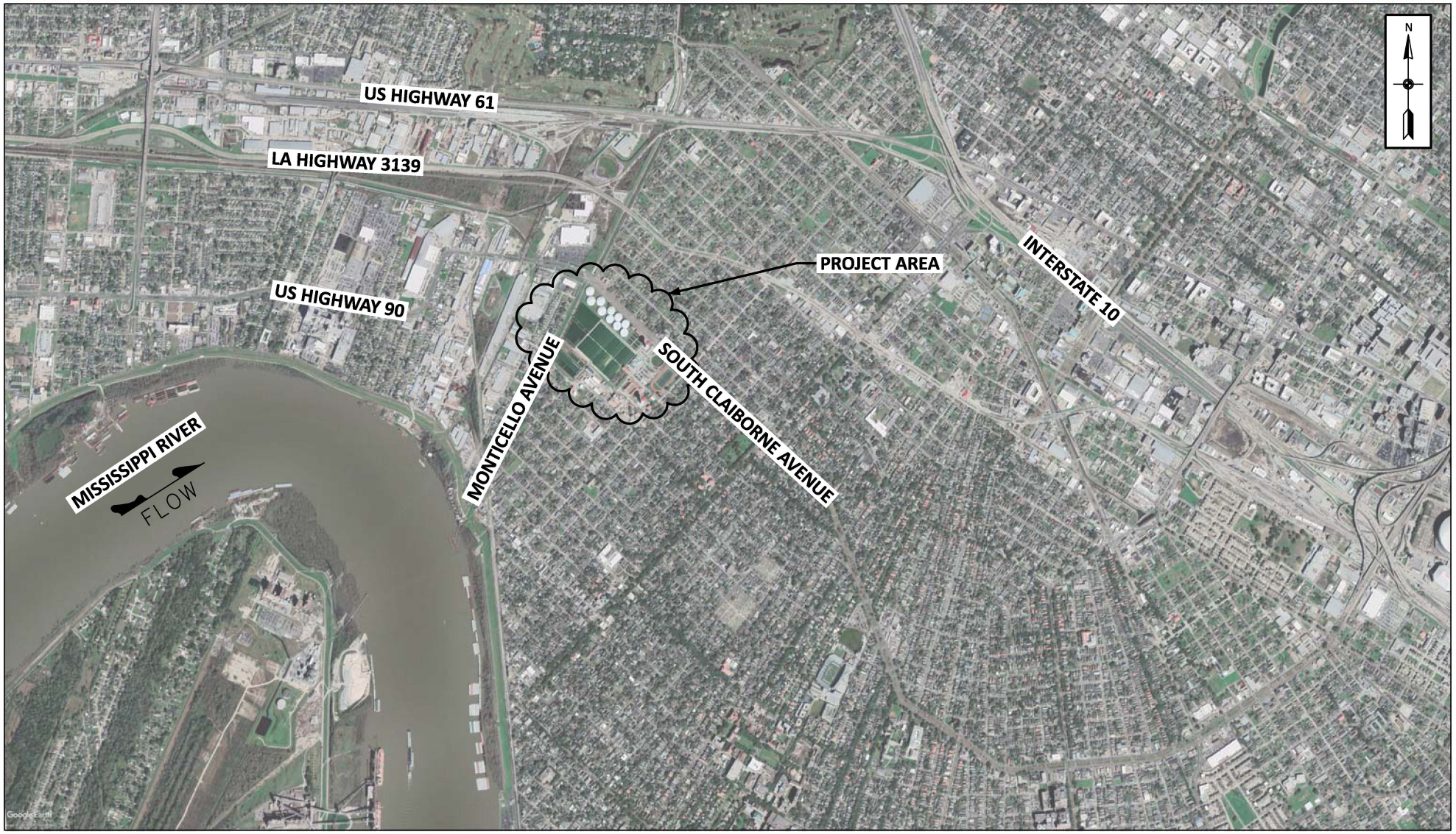

SATELLITE IMAGERY DATED: 6 FEBRUARY 2020

NOT TO SCALE

SITE VICINITY MAP

SEWERAGE & WATER BOARD OF NEW ORLEANS
WEST POWER COMPLEX PROJECT
CARROLLTON WATER PLANT
NEW ORLEANS, LOUISIANA

EUSTIS ENGINEERING L.L.C. SINCE 1946

DRAWN BY: S.T.S.	JOB NO.: 24753
CHECKED BY: S.J.B.	DATE: 24 MAR 2022
CADD FILE: VICINTY PLAN.DGN	FIGURE 1

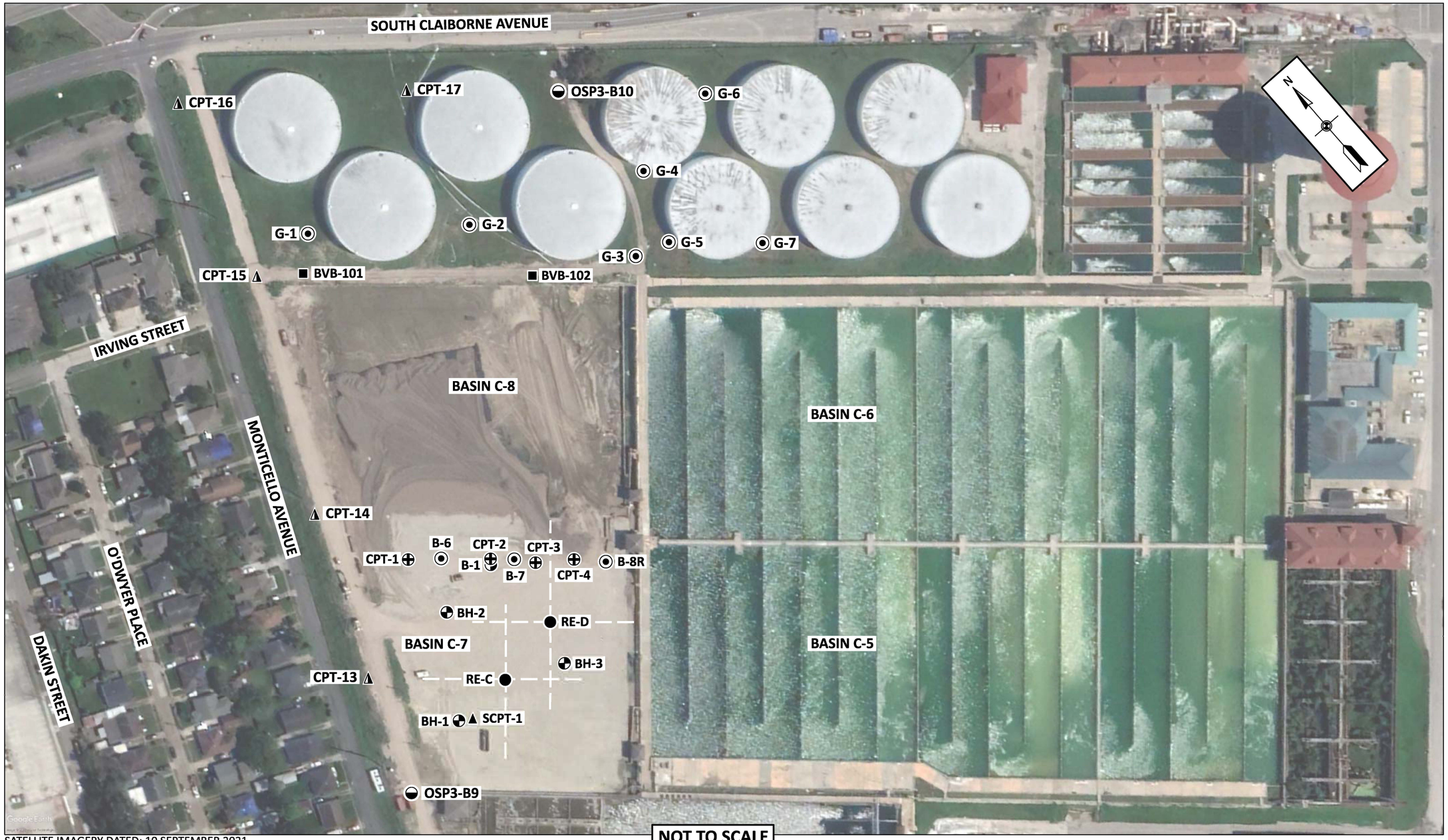

NOT TO SCALE

SATELLITE IMAGERY DATED: 10 SEPTEMBER 2021

- ◒ DENOTES APPROXIMATE LOCATIONS OF SOIL BORINGS DRILLED BETWEEN 28 FEBRUARY AND 4 MARCH 2022
- ▲ DENOTES APPROXIMATE LOCATION OF SEISMIC CONE PENETRATION TEST PERFORMED ON 23 MARCH 2022
- ● DENOTES APPROXIMATE CENTER OF ELECTRICAL RESISTIVITY TESTING PERFORMED ON 21 MARCH 2022
- ◒ DENOTES APPROXIMATE LOCATIONS OF SOIL BORINGS DRILLED UNDER EUSTIS ENGINEERING PROJECT NO. 20514 ON 2 AND 22 APRIL 2009
- ◭ DENOTES APPROXIMATE LOCATIONS OF CONE PENETRATION TESTS PERFORMED UNDER EUSTIS ENGINEERING PROJECT NO. 20514 BETWEEN 26 MARCH AND 6 MAY 2009
- ◉ DENOTES APPROXIMATE LOCATIONS OF DIRECT PUSH BORINGS DRILLED UNDER EUSTIS ENGINEERING PROJECT NO. 23394 BETWEEN 1 AUGUST AND 28 SEPTEMBER 2017
- ■ DENOTES APPROXIMATE LOCATIONS OF SOIL BORINGS DRILLED BY ARDAMAN & ASSOCIATES ON 12 MARCH 2021
- ◑ DENOTES APPROXIMATE LOCATIONS OF SOIL BORINGS DRILLED BY ARDAMAN & ASSOCIATES ON 21 JULY 2021
- ⊕ DENOTES APPROXIMATE LOCATIONS OF CONE PENETRATION TESTS PERFORMED BY ARDAMAN & ASSOCIATES ON 14 JULY 2021

GEOTECHNICAL EXPLORATION PLAN

SEWERAGE & WATER BOARD OF NEW ORLEANS
WEST POWER COMPLEX PROJECT
CARROLLTON WATER PLANT
NEW ORLEANS, LOUISIANA

EUSTIS ENGINEERING L.L.C. SINCE 1946

DRAWN BY: S.T.S.	JOB NO.: 24753
CHECKED BY: S.J.B.	DATE: 29 MAR 2022
CADD FILE: SITE PLAN.DGN	FIGURE 2

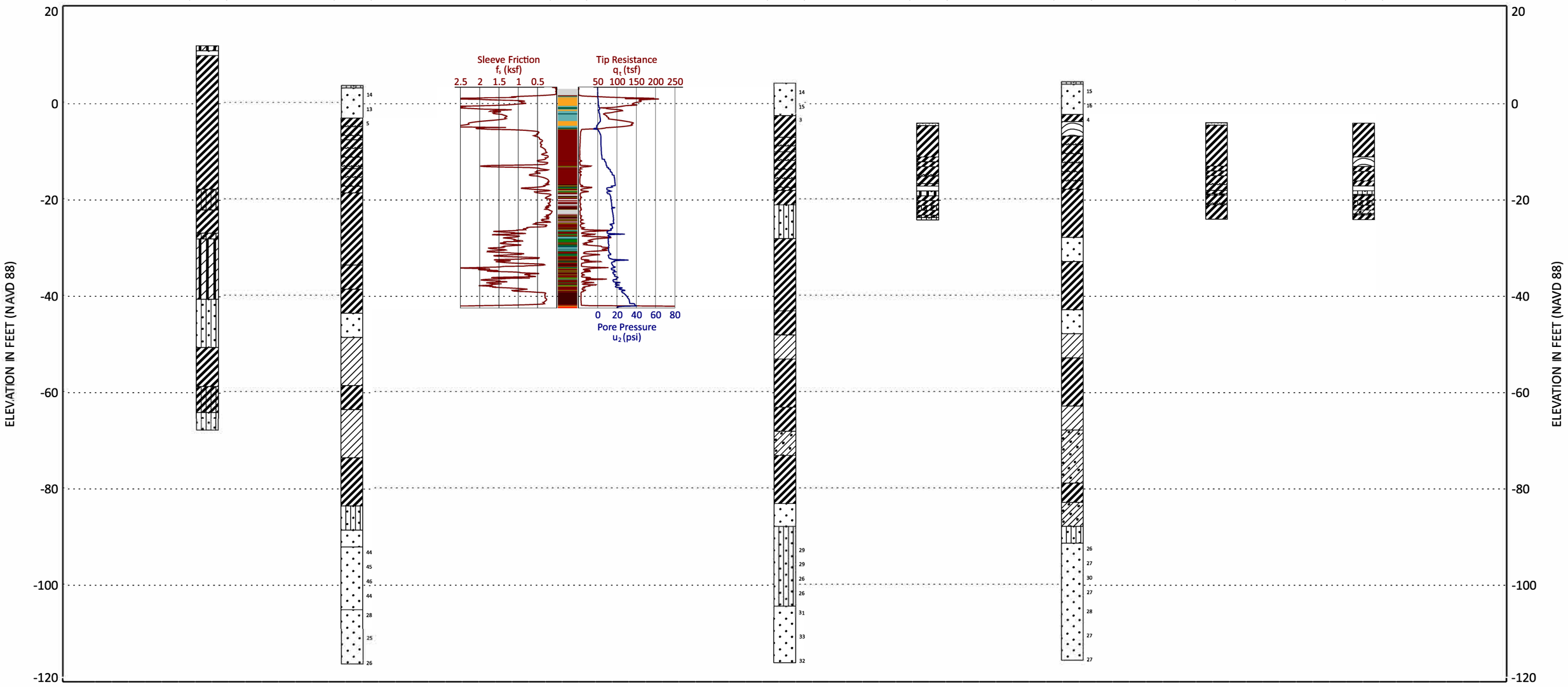

CPT MATERIAL GRAPHICS

- SENSITIVE FINE GRAINED
- ORGANIC SOILS, PEATS
- CLAY
- SILTY CLAY TO CLAY
- CLAYEY SILT TO SILTY CLAY
- SANDY SILT TO CLAYEY SILT
- SILTY SAND TO SANDY SILT
- SAND TO SILTY SAND
- SAND
- GRAVELLY SAND TO SAND
- VERY STIFF FINE GRAINED (*)
- SAND TO CLAYEY SAND (*)

* OVERCONSOLIDATED OR CEMENTED

Robertson et al (1986) q_c vs Rf

BORING MATERIAL GRAPHICS

- FAT CLAY
- SAND
- SILTY SAND
- SILT
- ORGANIC CLAY
- LEAN CLAY
- WOOD
- SILTY CLAY
- SANDY CLAY
- CLAYEY SAND
- SANDY SILT
- CLAYEY SILT
- PEAT/HUMUS
- CONCRETE

NOTES:

1. THE NUMBERS TO THE RIGHT OF THE BORING LOGS REPRESENT THE RESULTS OF THE STANDARD PENETRATION TESTS.
2. G.S.E. = GROUND SURFACE ELEVATION. THE ABOVE ELEVATIONS ARE ESTIMATED FROM SURVEY DATA PRODUCED BY GOTECH, INC.
3. THE NUMBERS IN PARENTHESIS BENEATH THE BORING/CPT DESIGNATIONS INDICATE THE EUSTIS ENGINEERING JOB NUMBER THAT LOCATION WAS EXPLORED UNDER.

SUBSURFACE SOIL PROFILE

SEWERAGE & WATER BOARD OF NEW ORLEANS
WEST POWER COMPLEX PROJECT CARROLLTON
WATER PLANT
NEW ORLEANS, LOUISIANA

EUSTIS ENGINEERING L.L.C. SINCE 1946

DRAWN BY: S.T.S.	JOB NO.: 24753
CHECKED BY: P.A.T.	DATE: 19 APR 2022
CADD FILE: SUBSURFACE.DGN	FIGURE 3

SEWERAGE & WATER BOARD OF NEW ORLEANS
WEST POWER COMPLEX PROJECT
CARROLLTON WATER PLANT
NEW ORLEANS, LOUISIANA
EUSTIS ENGINEERING PROJECT NO. 24753

ESTIMATED ALLOWABLE SINGLE PILE LOAD CAPACITIES
TREATED ASTM D25 QUALITY TIMBER

PILE SIZE	PILE LENGTH IN FEET[1]	PILE TIP ELEVATION[1] (NAVD 88)	ESTIMATED ALLOWABLE SINGLE PILE LOAD CAPACITIES IN TONS[2][3] FACTOR OF SAFETY ≈ 2[4]	
			COMPRESSION	TENSION
7-In. Tip 12-In. Butt	40 45 50 55	-37 -42 -47 -52	8 11 13 15	5½ 6½ 9 10½
7-In. Tip 13-In. Butt	60 65 70	-57 -62 -67	18 20 22½	12 14 15½

[1] Selection of pile tip embedment should also consider settlement potential. Estimates assume a ground surface at el 3 and include a capacity reduction for an approximate 2-ft cutoff at the pile butt.

[2] Piles assumed to be installed by impact driving equipment without assistance from vibratory equipment.

[3] These estimated capacities do not include limitations on structural capacity as imposed by some building codes.

[4] Use of a factor of safety of 2 assumes static pile load testing will be performed.

[5] Installation of timber piles between approximate el -42 and el -47 will likely require predrilling. See report text for further discussion.

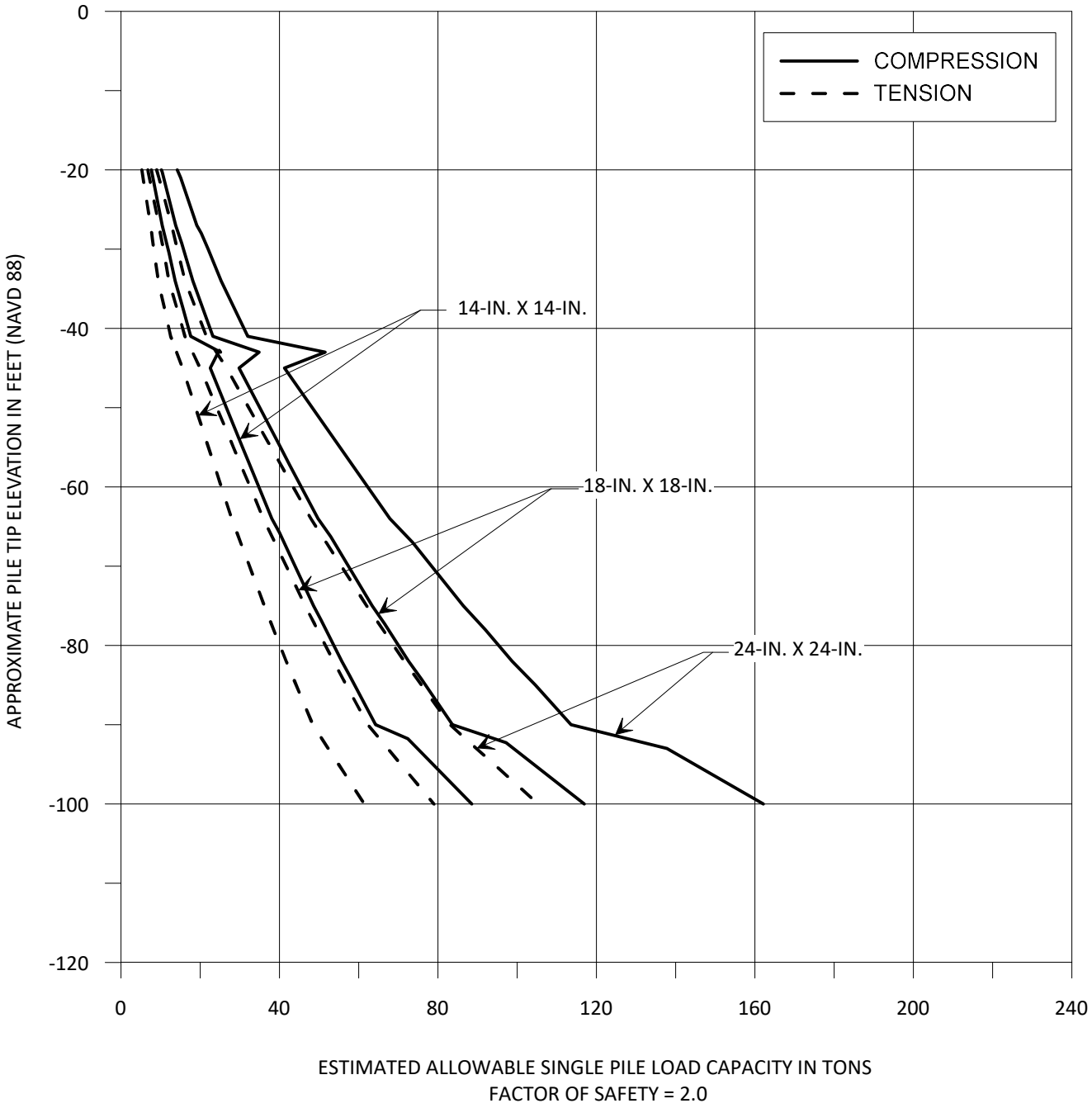

NOTES:

1. ALLOWABLE PILE LOAD CAPACITIES PRESENTED ON THIS FIGURE DO NOT INCLUDE THE WEIGHT OF THE PILES.

2. PILES ASSUMED TO BE INSTALLED BY IMPACT DRIVING EQUIPMENT WITHOUT ASSISTANCE FROM JETTING OR VIBRATORY EQUIPMENT.

3. AXIAL ESTIMATES OF CAPACITY ASSUME A GRADE SURFACE NEAR EL 3 AND NEGLECT THE UPPER 2 FEET FOR EMBEDMENT WITHIN A PILE CAP.

4. USE OF A FACTOR OF SAFETY OF 2.0 ASSUMES A STATIC LOAD TEST WILL BE PERFORMED.

5. PREDRILLING LIKELY NECESSARY FOR PRECAST CONCRETE PILE INSTALLATION BELOW APPROXIMATE EL -42 TO EL -47. SEE REPORT FOR FURTHER DISCUSSION.

ESTIMATED ALLOWABLE PILE LOAD CAPACITIES
SQUARE, PRECAST CONCRETE PILES

SEWERAGE & WATER BOARD OF NEW ORLEANS
WEST POWER COMPLEX PROJECT
CARROLLTON WATER PLANT
NEW ORLEANS, LOUISIANA

EUSTIS ENGINEERING SINCE 1946

DRAWN BY: S.J.B.	JOB NO.: 24753
CHECKED BY: P.A.T.	DATE: 31 MAR 2022
FILE NAME: SPC APLC	FIGURE 5

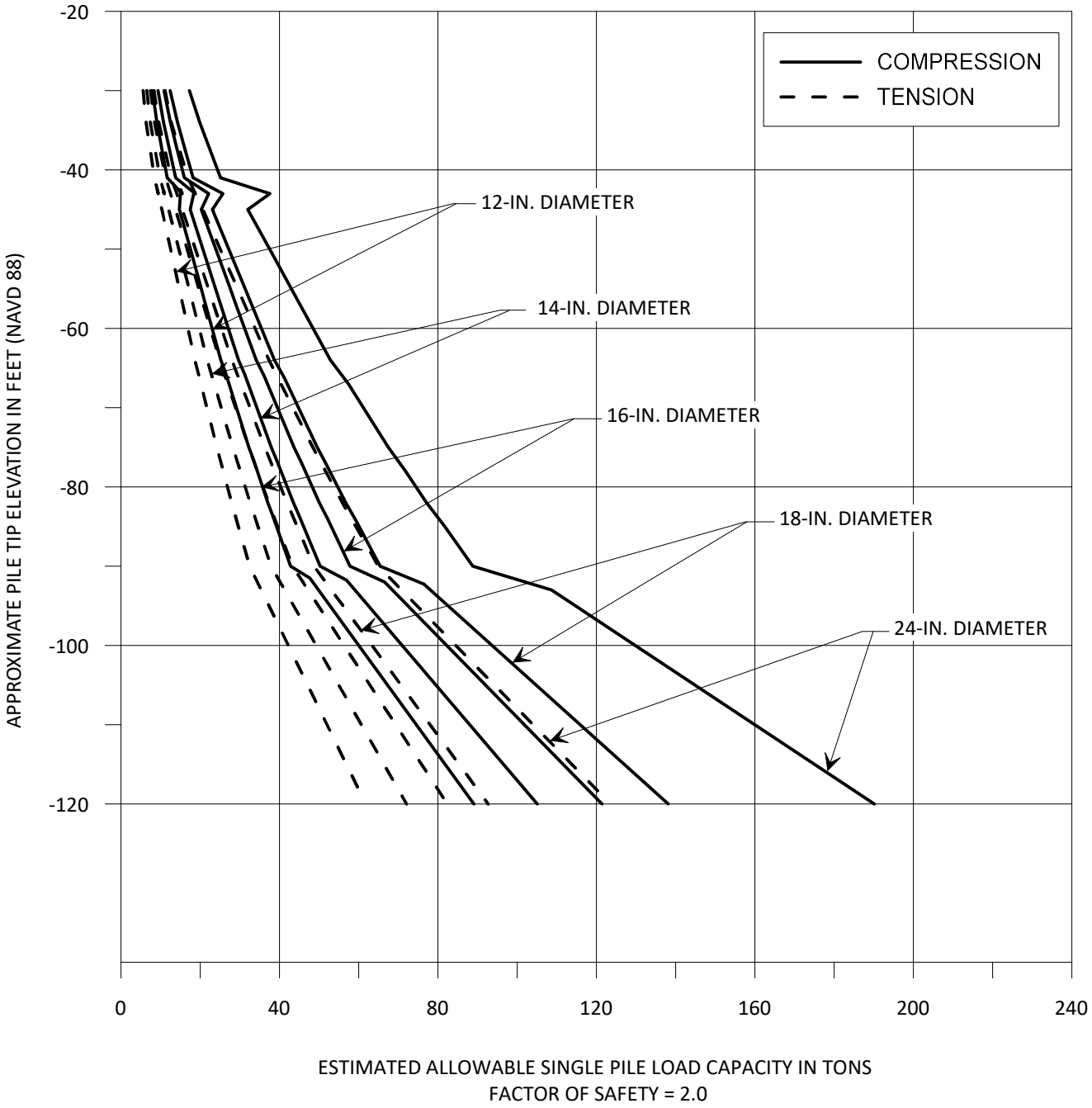

NOTES:

1. ALLOWABLE PILE LOAD CAPACITIES PRESENTED ON THIS FIGURE DO NOT INCLUDE THE WEIGHT OF THE PILES.

2. PILES ASSUMED TO BE INSTALLED BY IMPACT DRIVING EQUIPMENT WITHOUT ASSISTANCE FROM JETTING OR VIBRATORY EQUIPMENT.

3. AXIAL ESTIMATES OF CAPACITY ASSUME A GRADE SURFACE NEAR EL 3 AND NEGLECT THE UPPER 2 FT FOR EMBEDMENT WITHIN A PILE CAP..

4. USE OF A FACTOR OF SAFETY OF 2 ASSUMES A STATIC LOAD TEST WILL BE PERFORMED.

ESTIMATED ALLOWABLE PILE LOAD CAPACITIES
OPEN-END, STEEL PIPE PILES

SEWERAGE & WATER BOARD OF NEW ORLEANS
WEST POWER COMPLEX PROJECT
CARROLLTON WATER PLANT
NEW ORLEANS, LOUISIANA
POWER PROJECT NO. 174602.01.12.03
POWER TASK ORDER NO. 1

EUSTIS ENGINEERING SINCE 1946

DRAWN BY: S.J.B.	JOB NO.: 24753
CHECKED BY: P.A.T.	DATE: 24 AUG 2022
FILE NAME: OSP APLC	FIGURE 6

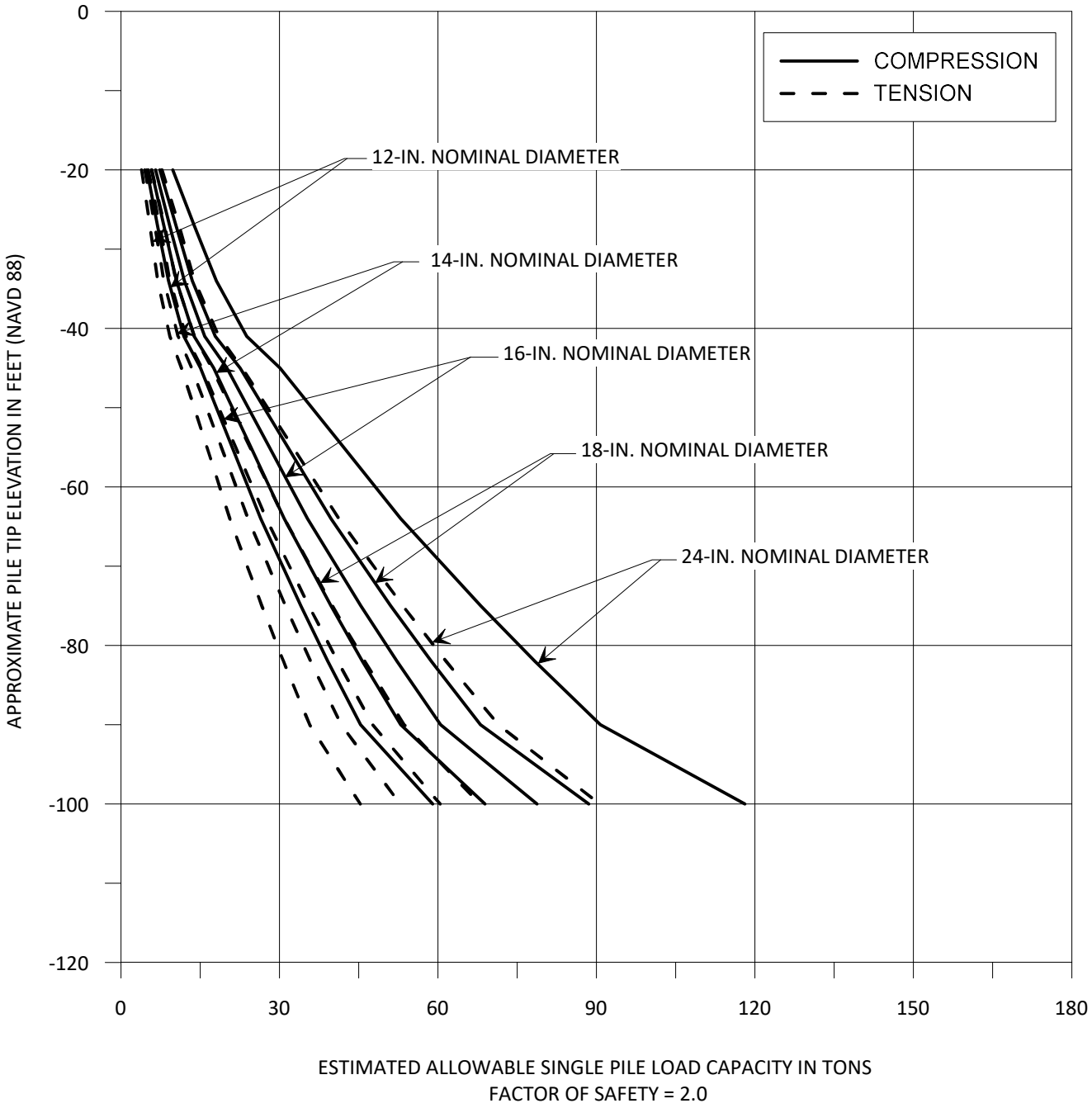

NOTES:

1. ALLOWABLE PILE LOAD CAPACITIES PRESENTED ON THIS FIGURE DO NOT INCLUDE THE WEIGHT OF THE PILES.
2. ESTIMATED CAPACITIES ASSUME ACTUAL GROUT PLACEMENT PLACED IS AT LEAST 120% OF THE THEORETICAL VALUE.
3. ESTIMATES INCLUDE CAPACITY REDUCTION FOR 2-FT CUTOFF AT THE PILE BUTT.
4. USE OF A FACTOR OF SAFETY OF 2.0 ASSUMES A STATIC LOAD TEST WILL BE PERFORMED.

ESTIMATED ALLOWABLE PILE LOAD CAPACITIES
AUGERED CAST-IN-PLACE CONCRETE PILES

SEWERAGE & WATER BOARD OF NEW ORLEANS
WEST POWER COMPLEX PROJECT
CARROLLTON WATER PLANT
NEW ORLEANS, LOUISIANA

EUSTIS ENGINEERING SINCE 1946

DRAWN BY: S.J.B.	JOB NO.: 24753
CHECKED BY: P.A.T.	DATE: 31 MAR 2022
FILE NAME: AC APLC	FIGURE 7

Vertical Load Capacity of Rows or Groups of Piles

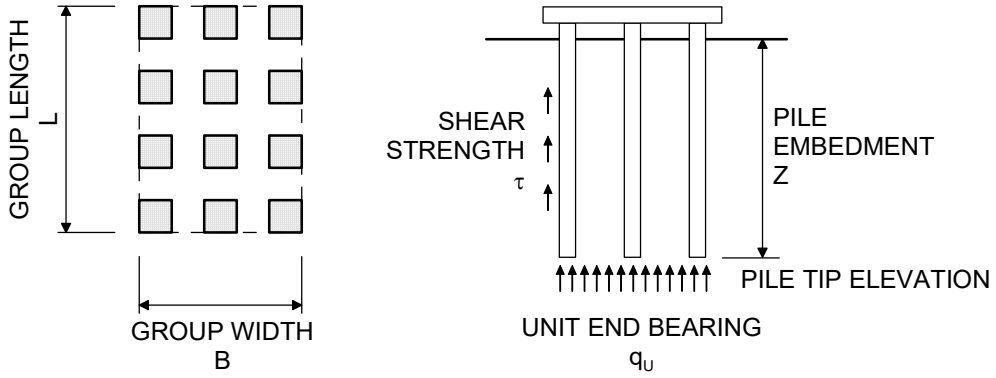

PLAN VIEW **ELEVATION VIEW**

The capacity of a row or group of piles may be equal to or less than the sum of the individual load capacities of piles within the group. The pile row or group may be considered a single equivalent pier, in which case the row or group capacity may be investigated using the following formula.

$$P_{GROUP} = \frac{(2L+2B)(\tau)(z)}{FS_{SIDE}} + \frac{2.6(B)(L)(q_U)(1+0.2\frac{B}{L})}{FS_{BASE}}$$

where:

B	=	The width of the pile group in plan dimension,
L	=	The length of the pile group in plan dimension,
Z	=	The embedded pile length,
τ	=	The average unit shear strength acting on the embedded pile length
q_U	=	The average unconfined compressive strength of material in the zone immediately below pile tips (unconfined compressive strength = undrained shear strength x 2; see Figure 3),
FS_{SIDE}	=	A factor of safety against mobilization of the ultimate skin friction (typically 2), and
FS_{BASE}	=	A factor of safety against mobilization of the ultimate end bearing (usually at least 3).

Notes:

(1) The average unit shear strength acting on the embedded pile length may be taken as the weighted average value of undrained shear strength (or undrained cohesion) acting over that length for assessments of the short-term load capacity of the group.

(2) For assessments of the short-term load capacity of the group, the ultimate end bearing is commonly estimated by multiplying an undrained shear strength (or undrained cohesion) by a bearing capacity factor, which typically varies between 5 and 6. The appropriate undrained shear strength and bearing capacity factor should consider the width and length of the pile group and the presence of any weak strata beneath the pile tips. In general, the unit end bearing pressure applicable to the pile group is not the same as the unit end bearing pressure used to estimate the load capacity of a single pile.

(3) The factor of safety against base failure should consider that large deformations may be required to mobilize the ultimate end bearing soil pressure estimated for the pile group.

Spacing of Pile Groups and Spacing of Piles Within Rows or Groups

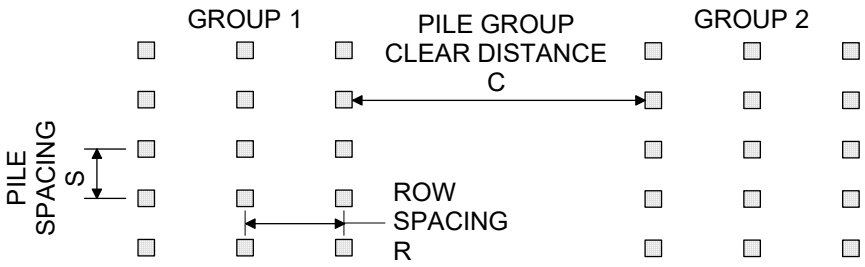

Piles should be arranged to provide a minimum center-to-center spacing, S, within rows or groups. This minimum recommended spacing may be taken as the largest value from the following criteria:

$$S = \frac{L_1}{20} + \frac{L_2}{40} + \frac{L_3}{80} \text{ ,or}$$

$$S = 3B \text{,or}$$

$$S = 3 \text{ feet}$$

where S = Center-to-center pile spacing, as illustrated above,

L_1 = Pile embedment up to 100 feet,

L_2 = Pile embedment between 100 and 200 feet,

L_3 = Pile embedment between 200 and 300 feet, and

B = Pile outside diameter or side dimension

These criteria can be presented graphically as follows:

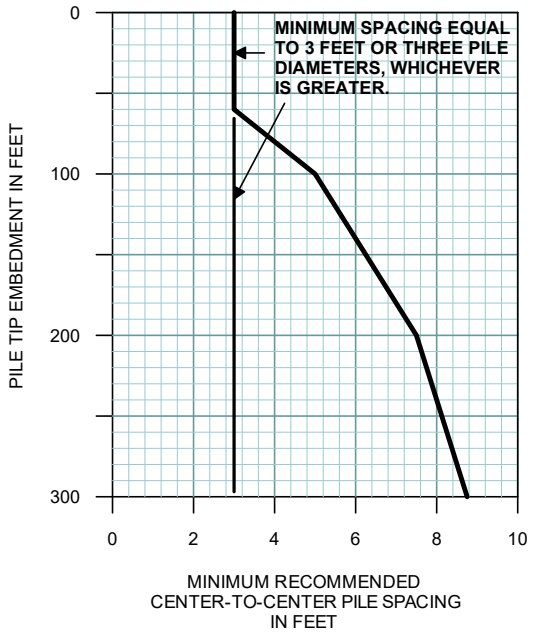

In addition, rows of single piles should provide a minimum center-to-center spacing, R, that is at least as large as the center-to-center pile spacing, S. Finally, individual pile groups should be arranged to provide a clear group spacing, C, equal to twice the largest dimension of the larger pile group. It should be noted that pile spacings greater than the minimum values presented above may be required to minimize the influence of individual piles on each other with respect to lateral load resistance and settlement or to ensure pile group capacity is adequate when investigated for group perimeter shear.

SEWERAGE & WATER BOARD OF NEW ORLEANS
WEST POWER COMPLEX PROJECT
CARROLLTON WATER PLANT
NEW ORLEANS, LOUISIANA
EUSTIS ENGINEERING PROJECT NO. 24753

ESTIMATES OF DESIGN PARAMETERS FOR USE WITH LATERAL LOAD ANALYSES (E.G., LPILE)[1]

LAYER NUMBER	DEPTH IN FEET	SOIL TYPE[2]	EFFECTIVE UNIT WEIGHT (PCF)	COHESION (PSF)	K_S[3] IN PCI	K_c[4] IN PCI	ε_{50}	FRICTION ANGLE (DEGREES)
1	0 to 2	Sand	100	-	90	90	-	29
2	2 to 6	Sand	37.6	-	60	60	-	29
3	6 to 13	Clay	23.6	300	140	93	0.02	-
4	13 to 21	Clay	12.6	200	93	56	0.02	-
5	21 to 30	Clay	41.6	290	135	81	0.02	-
6	30 to 37	Sand	57.6	-	20	20	-	28
7	37 to 44	Clay	44.6	475	221	132	0.02	-
8	44 to 48	Sand	57.6	-	60	60	-	30
9	48 to 58	Clay	47.6	700	326	194	0.01	-
10	58 to 67	Clay	47.6	700	326	194	0.01	-
11	67 to 78	Clay	57.6	800	372	200	0.01	-
12	78 to 85	Clay	44.6	850	395	200	-	-
13	85 to 93	Clay	54.6	900	419	200	0.01	-
14	93 to 118	Sand	57.6	-	60	60	-	30

[1] These soil parameters cannot fully anticipate all parameters which may influence the selection of design values for specific analyses. For this reason, the user should assess the applicability of these values in any design analyses or contact Eustis Engineering.

[2] The soil type models used with Ensoft programs (LPILE and GROUP) are subject to engineering judgment and the experience of the engineer performing the analyses.

[3] These values are for analysis of static loading conditions.

[4] These values are for analysis of cyclic loading conditions.

SEWERAGE & WATER BOARD OF NEW ORLEANS
WEST POWER COMPLEX PROJECT
NEW ORLEANS, LOUISIANA
EUSTIS ENGINEERING PROJECT NO. 24753

RESULTS OF LPILE ANALYSES FOR VERTICAL PILES

PILE TYPE	PILE NOMINAL DIAMETER/WIDTH IN INCHES	PILE LENGTH IN FEET	PILE WALL THICKNESS IN INCHES	PILE HEAD FIXITY CONDITION	LATERAL DEFLECTION AT PILE HEAD IN INCHES	LATERAL LOAD APPLIED AT THE PILE HEAD IN KIPS	MAXIMUM MOMENT IN PILE IN KIP-FEET	DEPTH BELOW PILE TOP TO MAXIMUM MOMENT IN PILE IN FEET
Open-End Steel Pipe Piles	12	90	0.375	Free Head	0.125	3.2	10.6	5.4
					0.250	4.7	17.1	5.4
					0.375	5.8	22.5	5.4
					0.500	6.9	27.4	5.4
				Fixed Head	0.125	6.9	26.6	0
					0.250	10.1	42.6	0
					0.375	12.6	56.2	0
					0.500	14.9	68.8	0
	14	90	0.375	Free Head	0.125	4.0	13.9	5.4
					0.250	5.7	21.9	6.3
					0.375	7.1	28.8	6.3
					0.500	8.2	34.8	6.3
				Fixed Head	0.125	8.4	34.8	0
					0.250	11.9	55.1	0
					0.375	14.7	72.1	0
					0.500	17.2	87.6	0
	18	90	0.375	Free Head	0.125	5.9	22.4	6.3
					0.250	8.2	34.7	7.2
					0.375	9.9	44.9	8.1
					0.500	11.3	54.0	8.1
				Fixed Head	0.125	11.7	55.5	0
					0.250	16.1	85.7	0
					0.375	19.4	110.6	0
					0.500	22.3	133.0	0

EUSTIS ENGINEERING SINCE 1946

AXIAL AND HORIZONTAL RESISTANCE OF BATTER PILES ESTIMATED FROM ALLOWABLE VERTICAL LOAD CAPACITIES

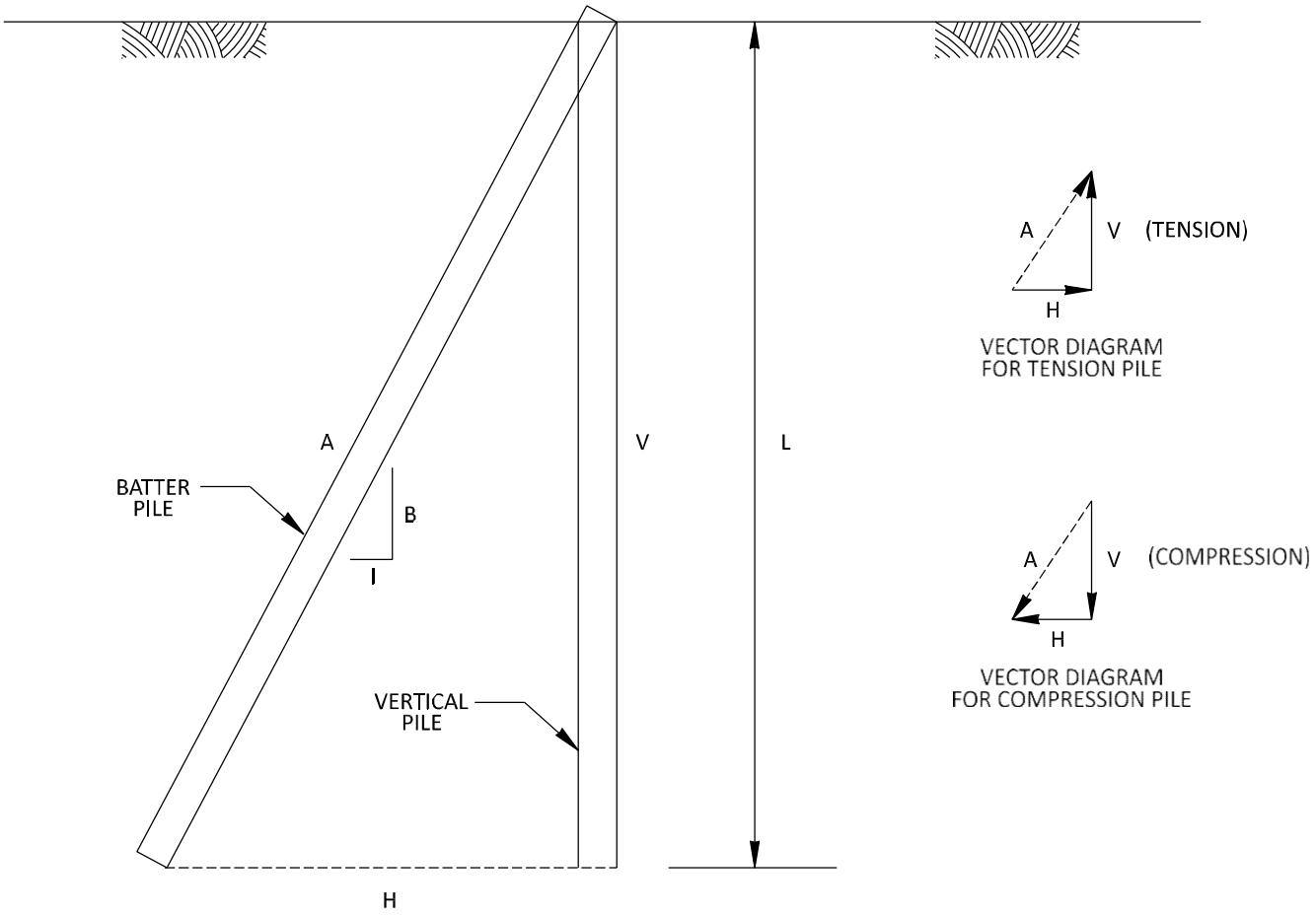

L = VERTICAL COMPONENT OF BATTER PILE EMBEDMENT LENGTH.

V = ESTIMATED ALLOWABLE SINGLE LOAD CAPACITY OF A PILE DRIVEN VERTICALLY WITH EMBEDMENT LENGTH, L.

B = BATTER OF PILE EXPRESSED AS A RATIO OF VERTICAL DISTANCE TO ONE FOOT HORIZONTAL DISTANCE.

H = HORIZONTAL RESISTANCE OF BATTER PILE ESTIMATED AS FOLLOWS: $H = \frac{V}{B}$

A = ALLOWABLE AXIAL PILE LOAD CAPACITY OF A SINGLE BATTER PILE ESTIMATED AS FOLLOWS: $A = \sqrt{V^2(1+\frac{1}{B^2})}$

NOTE: THE AXIAL LOAD RESISTANCE OF A VERTICAL PILE, V, IS DEPENDENT ON THE TYPE OF LOADING - TENSION OR COMPRESSION. CAUTION SHOULD BE EXERCISED TO ENSURE THE CORRECT VERTICAL CAPACITY IS USED.

APPENDIX I

Entergy - S&WB Substation
Monticello Avenue
New Orleans, LA

Entergy Services, Inc.
639 Loyola Ave
New Orleans, LA

LOG OF SOIL BORING BVB-101

Ardaman & Associates, Inc.

Sheet 1 of 5

File: 21-2807
Date: 3/12/21
Logged by: J. Nix
Driller: K. Cunningham
Rig: CME 550X

Location: Lat. 29° 57' 46.2"
Long. 90° 7' 51.29"
Surface Elevation: (ft., NAVD88)

FIELD DATA				LABORATORY DATA									
Ground Water Level	Depth (feet)	Samples	Field Test Results	Compressive Strength (tsf)	Water Content (%)	Wet Unit Weight (pcf)	Atterberg Limits LL	Atterberg Limits PL	Atterberg Limits PI	Percent Passing #200 Sieve	Organic Content (%)	Soil Type	Description
			1.00 (P)		22					39			Loose tan and white SILTY SAND (SM) with trace gravel and clay layers
			1.50 (P)		55					13			Loose white SILTY SAND (SM)
			1.25 (P)	0.86 t=8.3	51	107							Medium Stiff gray FAT CLAY (CH) with trace organic
	5		1.25 (P)	0.73 t=16.6	51	107	79	25	54				
▽			0.75 (P)	0.53 t=10.4	53	106	91	28	63		7.0		Medium Stiff gray ORGANIC CLAY (OH) with trace gravel
			0.50 (P)	0.35 t=12.5	60	106	71	25	46				Soft light gray FAT CLAY (CH) with trace gravel, organic, and lean clay layers
	10		0.50 (P)	0.41 t=25.0	57	103							
			0.75 (P)		49		97	29	68				Medium Stiff gray FAT CLAY (CH) with silt seams
													Very Soft to Soft gray to dark gray ORGANIC CLAY (OH)
	15		0.25 (P)		99		125	34	91		9.5		
			WOH b/f 0-0-0		129		188	50	138		17.1		
			0.25 (P)	0.60 t=15.3	243	73	335	95	240		27.1		Medium Stiff dark gray ORGANIC CLAY (OH)
	20		0.25 (P)	0.80 t=30.6	217	76							

Continued Next Page

Ground Water Level Data

▽ Free water first encountered

▽ Water level after 15 mins.

Boring Advancement Method

4" Nom. Dia. Short Flight Auger:
0 to 8 ft.
4" Dia. Rotary Wash:
8 to 100 ft.

Boring Abandonment Method

Borehole grouted with cement/ bentonite upon completion

Notes

t= lateral confining pressure (psi)

Strata Boundaries May Not Be Exact

ARD LOG01R 21-2807.GPJ LOG01.GDT 4/28/21

Entergy - S&WB Substation
Monticello Avenue
New Orleans, LA

Entergy Services, Inc.
639 Loyola Ave
New Orleans, LA

LOG OF SOIL BORING BVB-101

Ardaman & Associates, Inc.

Sheet 2 of 5

File: 21-2807
Date: 3/12/21
Logged by: J. Nix
Driller: K. Cunningham
Rig: CME 550X

Location: Lat. 29° 57' 46.2"
Long. 90° 7' 51.29"
Surface Elevation: (ft., NAVD88)

FIELD DATA				LABORATORY DATA									
Ground Water Level	Depth (feet)	Samples	Field Test Results	Compressive Strength (tsf)	Water Content (%)	Wet Unit Weight (pcf)	Atterberg Limits LL	Atterberg Limits PL	Atterberg Limits PI	Percent Passing #200 Sieve	Organic Content (%)	Soil Type	Description
			1.00 (P)		254								Medium Stiff dark gray ORGANIC CLAY (OH)
			0.25 (P)		52	99	58	20	38	97	3.1		Soft gray FAT CLAY (CH) with trace organic
			0.75 (P)		38		38	19	19				Medium Stiff gray LEAN CLAY (CL) with many silt/sand/fat clay lenses and layers
	25		0.50 (P)	0.48 t=17.4	53	106							Soft to Medium Stiff gray FAT CLAY (CH) with silt/sand layers
			0.50 (P)	0.52 t=34.8	67	101	58	19	39				
			0.25 (P)		24		50	23	27				
	30		27 b/f 3-9-18		40					45			Medium Dense to Dense tan SILTY SAND (SM) with fat clay layers
			33 b/f 12-14-19		30								-with trace organic
			18 b/f 6-8-10		32					10			Medium Dense tan and gray SAND (SP-SM) with silt and trace organic
	35		9 b/f 3-4-5		30					16			Loose gray and tan SILTY SAND (SM) with trace organic and clay layers
			6 b/f 3-2-4		36								
	40												

Continued Next Page

Ground Water Level Data

Free water first encountered

Water level after 15 mins.

Boring Advancement Method

4" Nom. Dia. Short Flight Auger:
0 to 8 ft.
4" Dia. Rotary Wash:
8 to 100 ft.

Boring Abandonment Method

Borehole grouted with cement/ bentonite upon completion

Notes

Strata Boundaries May Not Be Exact

ARD LOG01R 21-2807.GPJ LOG01.GDT 4/28/21

Entergy - S&WB Substation
Monticello Avenue
New Orleans, LA

Entergy Services, Inc.
639 Loyola Ave
New Orleans, LA

LOG OF SOIL BORING BVB-101

Ardaman & Associates, Inc.

Sheet 3 of 5

File: 21-2807
Date: 3/12/21
Logged by: J. Nix
Driller: K. Cunningham
Rig: CME 550X

Location: Lat. 29° 57' 46.2"
Long. 90° 7' 51.29"
Surface Elevation: (ft., NAVD88)

FIELD DATA				LABORATORY DATA									
Ground Water Level	Depth (feet)	Samples	Field Test Results	Compressive Strength (tsf)	Water Content (%)	Wet Unit Weight (pcf)	Atterberg Limits LL	Atterberg Limits PL	Atterberg Limits PI	Percent Passing #200 Sieve	Organic Content (%)	Soil Type	Description
			8 b/f 0-4-4		69		74	23	51				Medium Stiff to Stiff gray FAT CLAY (CH) with sand layers
			2 b/f 1-1-1		57		76	24	52				Very Soft to Soft gray FAT CLAY (CH) with trace sand layers
	45		0.25 (P)	0.54 t=20.8	58	103	63	21	42				Medium Stiff gray FAT CLAY (CH) with trace silt/sand lenses
			0.25 (P)	0.54 t=41.6	59	104							
			0.50 (P)		96		76	26	50				
	50		64 b/f 20-31-33		22					5			Very Dense gray and tan SAND (SP-SM) with silt and layers of clay
			13 b/f 9-7-6		26					12			Medium Dense gray SAND (SP-SM) with silt and trace shell fragments
			2 b/f 1-1-1		32								Very Soft to Soft gray SANDY LEAN CLAY (CL) with shell fragments
	55		0.25 (P)		42		42	19	23	57			
	60		0.75 (P)		45	108	72	23	49	81			Medium Stiff gray FAT CLAY (CH) with sand and trace shell fragments

Continued Next Page

Ground Water Level Data

Free water first encountered

Water level after 15 mins.

Boring Advancement Method

4" Nom. Dia. Short Flight Auger:
0 to 8 ft.
4" Dia. Rotary Wash:
8 to 100 ft.

Boring Abandonment Method

Borehole grouted with cement/ bentonite upon completion

Notes

Strata Boundaries May Not Be Exact

ARD LOG01R 21-2807.GPJ LOG01.GDT 4/28/21

Entergy - S&WB Substation
Monticello Avenue
New Orleans, LA

Entergy Services, Inc.
639 Loyola Ave
New Orleans, LA

LOG OF SOIL BORING BVB-101

Ardaman & Associates, Inc.

Sheet 4 of 5

File: 21-2807
Date: 3/12/21
Logged by: J. Nix
Driller: K. Cunningham
Rig: CME 550X

Location: Lat. 29° 57' 46.2"
Long. 90° 7' 51.29"
Surface Elevation: (ft., NAVD88)

FIELD DATA				LABORATORY DATA									
Ground Water Level	Depth (feet)	Samples	Field Test Results	Compressive Strength (tsf)	Water Content (%)	Wet Unit Weight (pcf)	Atterberg Limits LL	Atterberg Limits PL	Atterberg Limits PI	Percent Passing #200 Sieve	Organic Content (%)	Soil Type	Description
			0.75 (P)	0.68 t=27.8	42	106							Medium Stiff gray SANDY FAT CLAY (CH)
			0.75 (P)	0.67 t=55.6	45	107	55	20	35				
			0.50 (P)		53		51	17	34	69			
	65		0.25 (P)	0.77 t=30.5	33	112	43	15	28	52			Medium Stiff gray SANDY LEAN CLAY (CL) with sand pockets and trace shell fragments
			9 b/f 4-4-5										Loose to Medium Dense gray and tan CLAYEY SAND (SC) with clay layers
	70		13 b/f 1-7-6		27		31	16	15	31			
			9 b/f 3-4-5										
			8 b/f 2-3-5		31					42			
	75		5 b/f 2-2-3										Medium Stiff gray and tan FAT CLAY (CH) with sand lenses and layers
			4 b/f 0-1-3		36		48	15	33				Soft to Medium Stiff gray LEAN CLAY (CL) with trace sand lenses and layers
	80												

Continued Next Page

Ground Water Level Data

▽ Free water first encountered

▽ Water level after 15 mins.

Boring Advancement Method

4" Nom. Dia. Short Flight Auger:
0 to 8 ft.
4" Dia. Rotary Wash:
8 to 100 ft.

Boring Abandonment Method

Borehole grouted with cement/ bentonite upon completion

Notes

Strata Boundaries May Not Be Exact

ARD LOG01R 21-2807.GPJ LOG01.GDT 4/28/21

Entergy - S&WB Substation
Monticello Avenue
New Orleans, LA

Entergy Services, Inc.
639 Loyola Ave
New Orleans, LA

LOG OF SOIL BORING BVB-101

Ardaman & Associates, Inc.

Sheet 5 of 5

File: 21-2807
Date: 3/12/21
Logged by: J. Nix
Driller: K. Cunningham
Rig: CME 550X

Location: Lat. 29° 57' 46.2"
Long. 90° 7' 51.29"
Surface Elevation: (ft., NAVD88)

FIELD DATA				LABORATORY DATA									
Ground Water Level	Depth (feet)	Samples	Field Test Results	Compressive Strength (tsf)	Water Content (%)	Wet Unit Weight (pcf)	Atterberg Limits LL	Atterberg Limits PL	Atterberg Limits PI	Percent Passing #200 Sieve	Organic Content (%)	Soil Type	Description
			2 b/f 0-0-2										Soft to Medium Stiff gray LEAN CLAY (CL) with trace sand lenses and layers
	85		22 b/f 11-10-12		24					8			Medium Dense reddish tan SAND (SP-SM) with silt and layers of clay
			25 b/f 7-13-12										Medium Dense to Dense gray SILTY SAND (SM) with clay layers
	90		21 b/f 8-9-12		25					21			
			25 b/f 9-10-15										
	95		31 b/f 11-14-17		27					13			
			20 b/f 10-8-12										Very Stiff gray FAT CLAY (CH) with sand layers
			47 b/f 12-20-27										Dense gray SILTY SAND (SM)
	100												Boring completed at 100 ft.

Ground Water Level Data

Free water first encountered

Water level after 15 mins.

Boring Advancement Method

4" Nom. Dia. Short Flight Auger:
0 to 8 ft.
4" Dia. Rotary Wash:
8 to 100 ft.

Boring Abandonment Method

Borehole grouted with cement/ bentonite upon completion

Notes

Strata Boundaries May Not Be Exact

ARD LOG01R 21-2807.GPJ LOG01.GDT 4/28/21

Entergy - S&WB Project Phase II
Monticello Avenue
New Orleans, LA

Entergy Services, Inc.
639 Loyola Ave
New Orleans, LA

LOG OF SOIL BORING B-1

Ardaman & Associates, Inc.

Sheet 1 of 3

File: 21-2855
Date: 7/21/21
Logged by: P. Scott
Driller: D. Anthony
Rig: CME 550X B

Location: Lat. 29° 57' 41.51" Long. 90° 7' 52.18"
Surface Elevation*: 2.82 (ft. NAVD88)

FIELD DATA				LABORATORY DATA									
Ground Water Level	Elev. (feet)	Samples	Field Test Results	Compressive Strength (tsf)	Water Content (%)	Wet Unit Weight (pcf)	Atterberg Limits LL	Atterberg Limits PL	Atterberg Limits PI	Percent Passing #200 Sieve	Organic Content (%)	Soil Type	Description
▽	0												Compacted gravel and sand fill
			18 b/f 6-8-10										(Fill) Medium Dense tan SILTY SAND (SM)
	-5		11 b/f 3-6-5										
			0.5 (P)										Soft gray FAT CLAY (CH) with trace organic
	-10		0.25 (P)		88		147	35	112		6.5		
			0.5 (P)		350		510	200	310		52.0		Soft dark gray PEAT (PT)
	-15		0.75 (P)		68		82	24	58		3.9		Soft gray FAT CLAY (CH) with trace organic
			0.25 (P)										
	-20		0.5 (P)		76		44	18	26		4.6		Soft gray LEAN CLAY (CL) with wood and trace organic
			1.5 (P)		55		40	21	19		2.6		
	-25		0.25 (P)										Loose gray SILTY SAND (SM)
			6 b/f 1-2-4										
	-30		17 b/f 4-9-8										Medium Dense gray SILTY SAND (SM)
			15 b/f 4-8-7										
	-35		1.0 (P)										Soft to Medium Stiff gray FAT CLAY (CH) with sand lenses and layers

Continued Next Page

Ground Water Level Data

▽ Free water first encountered

Boring Advancement Method

4" Nom. Dia. Short Flight Auger:
0 to 10 ft.
4" Dia. Rotary Wash:
10 to 102 ft.

Boring Abandonment Method

Borehole grouted with cement/ bentonite upon completion

Notes

Laboratory testing program selected by Black & Veatch. Classifications of samples with no tests are based on Ardaman's visual classification.

Strata Boundaries May Not Be Exact

ARD LOG01R - ELEVATION 21-2855.GPJ LOG01.GDT 9/16/21

Entergy - S&WB Project Phase II
Monticello Avenue
New Orleans, LA

Entergy Services, Inc.
639 Loyola Ave
New Orleans, LA

LOG OF SOIL BORING B-1

Ardaman & Associates, Inc.

Sheet 2 of 3

File: 21-2855
Date: 7/21/21
Logged by: P. Scott
Driller: D. Anthony
Rig: CME 550X B

Location: Lat. 29° 57' 41.51"
Long. 90° 7' 52.18"
Surface Elevation*: 2.82 (ft. NAVD88)

FIELD DATA				LABORATORY DATA									
Ground Water Level	Elev. (feet)	Samples	Field Test Results	Compressive Strength (tsf)	Water Content (%)	Wet Unit Weight (pcf)	Atterberg Limits LL	Atterberg Limits PL	Atterberg Limits PI	Percent Passing #200 Sieve	Organic Content (%)	Soil Type	Description
			1.5 (P)										Soft to Medium Stiff gray FAT CLAY (CH) with sand lenses and layers
	-40		1.25 (P)										Loose gray SILTY SAND (SM) with clay pockets and layers
													gray FAT CLAY (CH)
	-45		8 b/f 7-5-3										Loose gray SILTY SAND (SM)
													gray SANDY LEAN CLAY (CL) with trace shell fragments
	-50												gray FAT CLAY (CH) with sandy lean clay layers
			0.75 (P)										Soft to Medium Stiff gray FAT CLAY (CH) with trace shell fragments and sand lenses
	-55		0.5 (P)										
			0.5 (P)										Soft to Medium Stiff gray SANDY LEAN CLAY (CL) with trace shell fragments and wood
	-60		2.25 (P)										Stiff light gray SANDY LEAN CLAY (CL) with sand layers
			1.75 (P)										Loose gray and tan SILTY SAND (SM) with clay layers
	-65		2.25 (P)										
			1.0 (P)										Medium Stiff gray to gray and tan FAT CLAY (CH) with sand lenses and layers
	-70		0.75 (P)										
			0.75 (P)										
	-75		20 b/f 1-8-12										Medium Dense gray and tan SILTY SAND (SM) with clay layers
													Medium Dense gray SILTY SAND (SM)

Continued Next Page

Ground Water Level Data

Free water first encountered

Boring Advancement Method

4" Nom. Dia. Short Flight Auger:
0 to 10 ft.
4" Dia. Rotary Wash:
10 to 102 ft.

Boring Abandonment Method

Borehole grouted with cement/ bentonite upon completion

Notes

Laboratory testing program selected by Black & Veatch. Classifications of samples with no tests are based on Ardaman's visual classification.

Strata Boundaries May Not Be Exact

Entergy - S&WB Project Phase II
Monticello Avenue
New Orleans, LA

Entergy Services, Inc.
639 Loyola Ave
New Orleans, LA

LOG OF SOIL BORING B-1

Ardaman & Associates, Inc.

Sheet 3 of 3

File: 21-2855
Date: 7/21/21
Logged by: P. Scott
Driller: D. Anthony
Rig: CME 550X B

Location: Lat. 29° 57' 41.51"
Long. 90° 7' 52.18"
Surface Elevation*: 2.82 (ft. NAVD88)

FIELD DATA				LABORATORY DATA									
Ground Water Level	Elev. (feet)	Samples	Field Test Results	Compressive Strength (tsf)	Water Content (%)	Wet Unit Weight (pcf)	Atterberg Limits LL	Atterberg Limits PL	Atterberg Limits PI	Percent Passing #200 Sieve	Organic Content (%)	Soil Type	Description
			18 b/f 4-8-10										Medium Dense gray SILTY SAND (SM)
	-80		16 b/f 4-8-8										
			13 b/f 3-5-8										
	-85		14 b/f 2-4-10										
			17 b/f 6-10-7										
	-90		20 b/f 6-8-12										
			21 b/f 6-10-11										
	-95		16 b/f 5-7-9										
			26 b/f 7-12-14										
	-100												Boring completed at 102 ft.
	-105												
	-110												
	-115												

Ground Water Level Data

▽ Free water first encountered

Boring Advancement Method

4" Nom. Dia. Short Flight Auger:
0 to 10 ft.
4" Dia. Rotary Wash:
10 to 102 ft.

Boring Abandonment Method

Borehole grouted with cement/ bentonite upon completion

Notes

Laboratory testing program selected by Black & Veatch. Classifications of samples with no tests are based on Ardaman's visual classification.

Strata Boundaries May Not Be Exact

ARD LOG01R - ELEVATION 21-2855.GPJ LOG01.GDT 9/16/21

Ardaman & Associates, Inc.

Entergy S&WB Substation & TL Phase II
(New Orleans,Louisiana)
21-2855

Cone Penetration Test

CPT-1

Date: Jul. 14, 2021
Operator: P. Scott

Latitude: 29°57'42.19"N
Longitude: 90° 7' 53.02"W

Elevation: 3.54 ft. NAVD88
Total Depth: 46.06 ft.

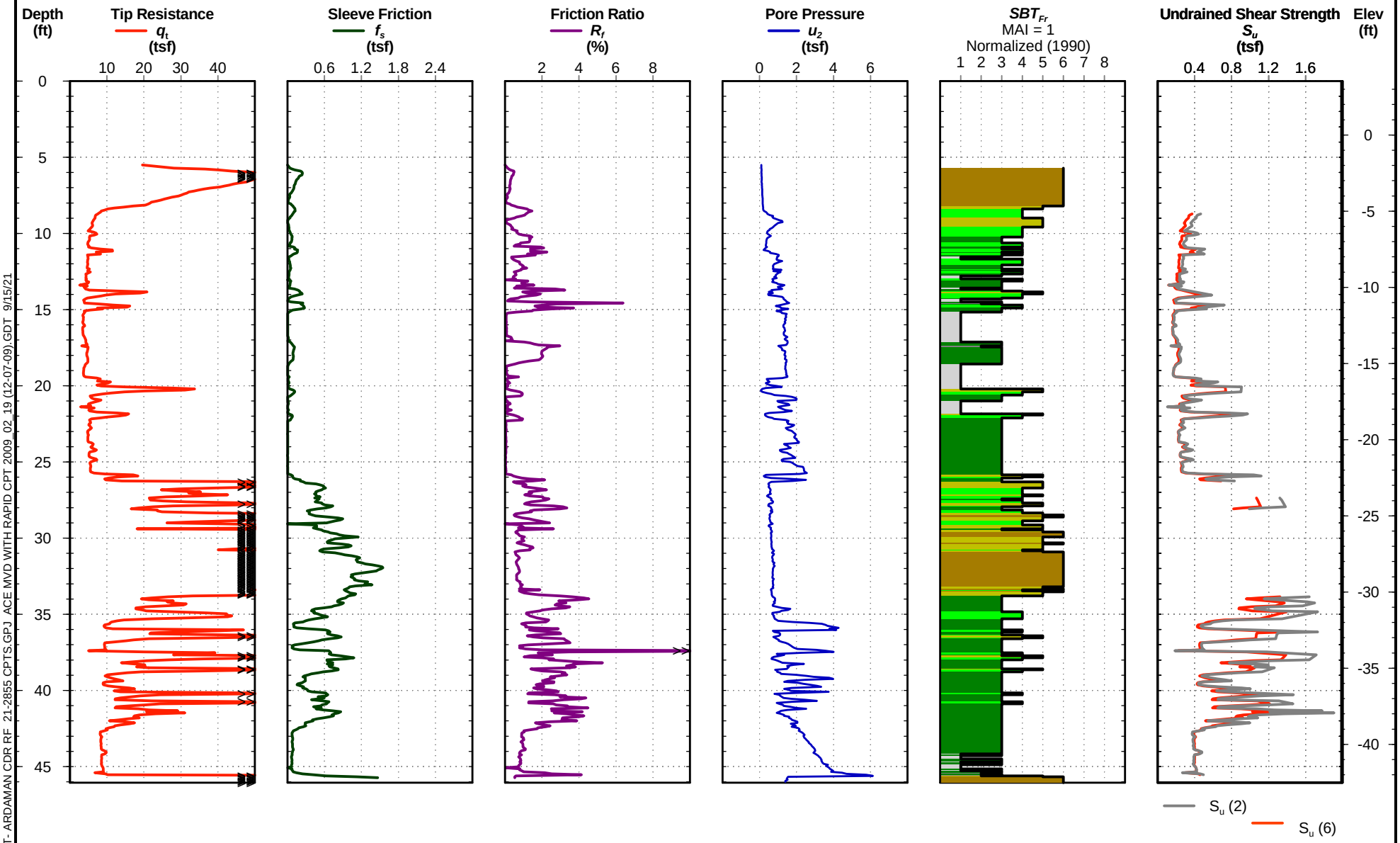

Notes:
-Robertson (1990) Normalized Soil Behavior Type (SBT) Friction Ratio.
-Test performed in general accordance with ASTM D5778-07
Page 1 of 1

1 - Sensitive, fine grained
2 - Organic soils - clay
3 - Clays - silty clay to clay
4 - Silt mixtures - clayey silt to silty clay
5 - Sand mixtures - silty sand to sandy silt
6 - Sands - clean sand to silty sand
7 - Gravelly sand to dense sand
8 - Very stiff sand to clayey sand *
9 - Very stiff, fine grained *

Su (2) = (qt - total vertical stress)/Nkt [Nkt = 15]
Su (6) = qc/Nc* [Nc = 20]

Termination Note: Maximum Reaction Force

* Overconsolidated or Cemented

CPT REPORT - ARDAMAN CDR RF 21-2855 CPTS.GPJ ACE MVD WITH RAPID CPT 2009_02_19 (12-07-09).GDT 9/15/21

Ardaman & Associates, Inc.

Entergy S&WB Substation & TL Phase II
(New Orleans,Louisiana)
21-2855

Cone Penetration Test

CPT-2

Date: Jul. 14, 2021
Operator: P. Scott

Latitude: 29°57'41.51"N
Longitude: 90° 7' 52.18"W

Elevation: 2.82 ft. NAVD88
Total Depth: 45.28 ft.

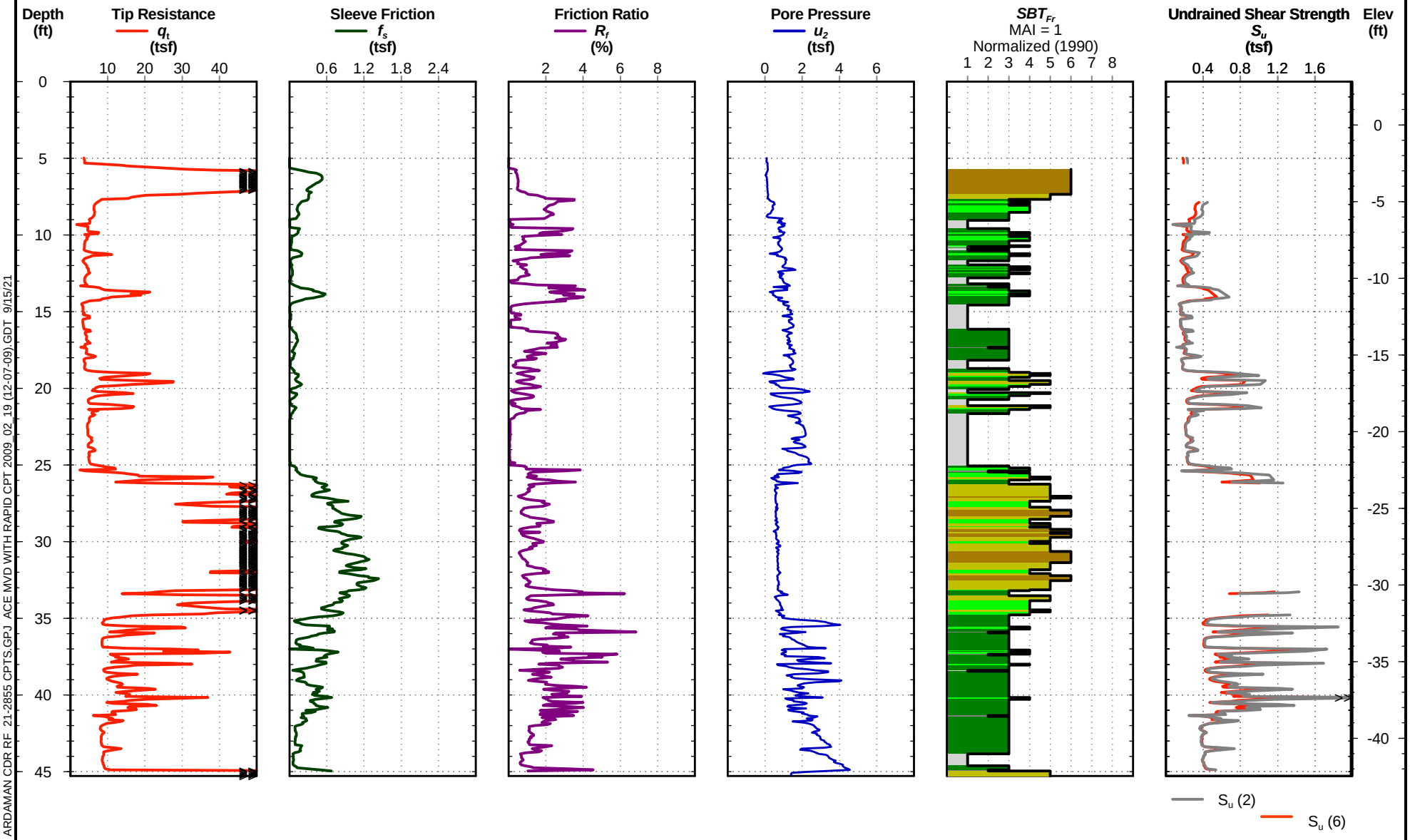

Notes:
-Robertson (1990) Normalized Soil Behavior Type (SBT) Friction Ratio.
-Test performed in general accordance with ASTM D5778-07
Page 1 of 1

1 - Sensitive, fine grained
2 - Organic soils - clay
3 - Clays - silty clay to clay
4 - Silt mixtures - clayey silt to silty clay
5 - Sand mixtures - silty sand to sandy silt
6 - Sands - clean sand to silty sand
7 - Gravelly sand to dense sand
8 - Very stiff sand to clayey sand *
9 - Very stiff, fine grained *

Su (2) = (qt - total vertical stress)/Nkt [Nkt = 15]
Su (6) = qc/Nc* [Nc = 20]

Termination Note: Maximum Reaction Force

* Overconsolidated or Cemented

CPT REPORT - ARDAMAN CDR RF 21-2855 CPTS.GPJ ACE MVD WITH RAPID CPT 2009_02_19 (12-07-09).GDT 9/15/21

Ardaman & Associates, Inc.

Entergy S&WB Substation & TL Phase II
(New Orleans,Louisiana)
21-2855

Cone Penetration Test

CPT-3

Date: Jul. 14, 2021
Operator: P. Scott

Latitude: 29°57'41.08"N
Longitude: 90° 7' 51.66"W

Elevation: 2.92 ft. NAVD88
Total Depth: 44.62 ft.

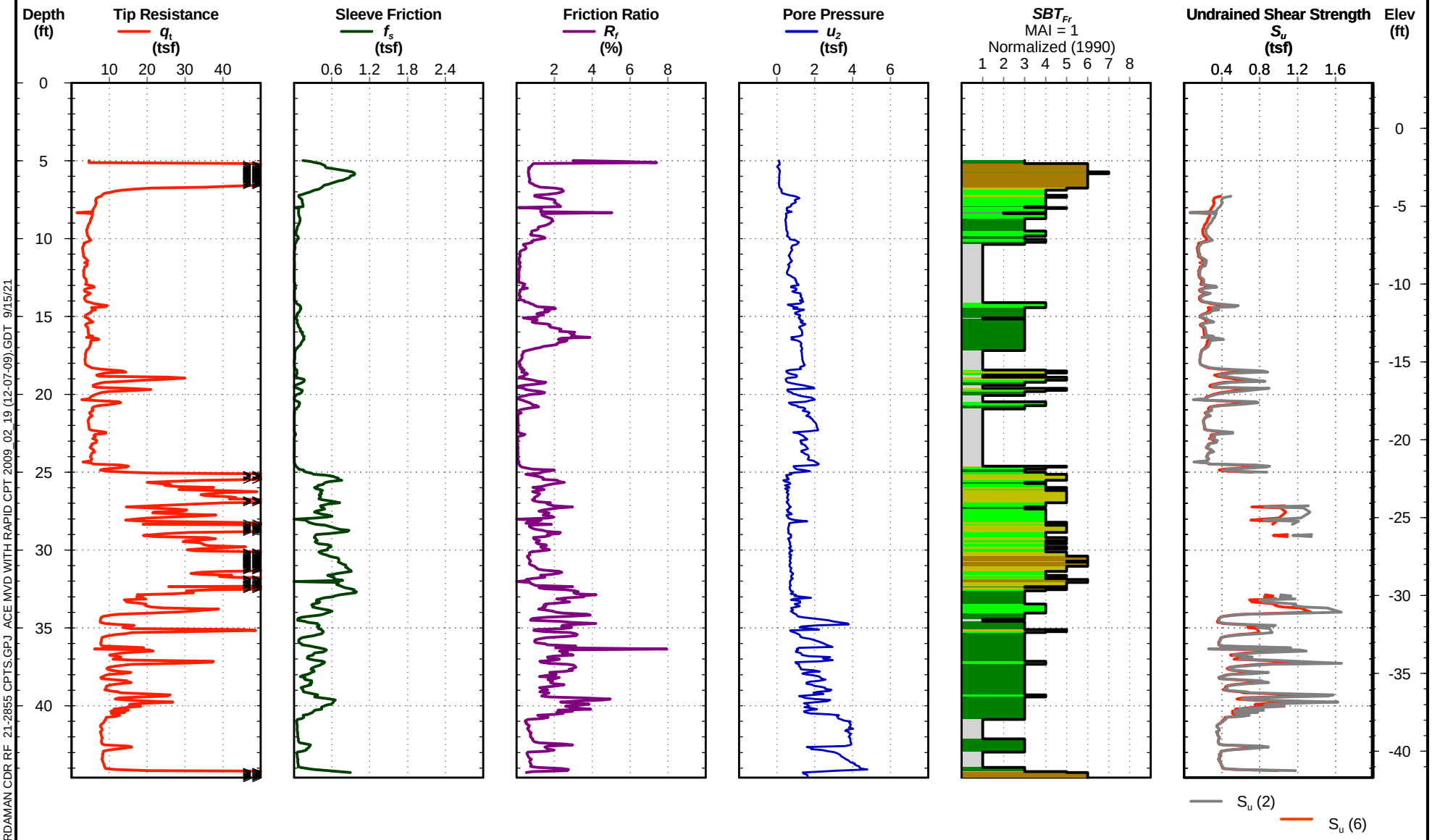

Notes:
-Robertson (1990) Normalized Soil Behavior Type (SBT) Friction Ratio.
-Test performed in general accordance with ASTM D5778-07
Page 1 of 1

1 - Sensitive, fine grained
2 - Organic soils - clay
3 - Clays - silty clay to clay
4 - Silt mixtures - clayey silt to silty clay
5 - Sand mixtures - silty sand to sandy silt
6 - Sands - clean sand to silty sand
7 - Gravelly sand to dense sand
8 - Very stiff sand to clayey sand *
9 - Very stiff, fine grained *

Su (2) = (qt - total vertical stress)/Nkt [Nkt = 15]
Su (6) = qc/Nc* [Nc = 20]

Termination Note: Maximum Reaction Force

* Overconsolidated or Cemented

CPT REPORT - ARDAMAN CDR RF 21-2855 CPTS.GPJ ACE MVD WITH RAPID CPT 2009_02_19 (12-07-09).GDT 9/15/21

Ardaman & Associates, Inc.

Entergy S&WB Substation & TL Phase II
(New Orleans,Louisiana)
21-2855

Cone Penetration Test

CPT-4

Date: Jul. 14, 2021
Operator: P. Scott

Latitude: 29°57'40.71"N
Longitude: 90° 7' 51.04"W

Elevation: 3.6 ft. NAVD88
Total Depth: 47.31 ft.

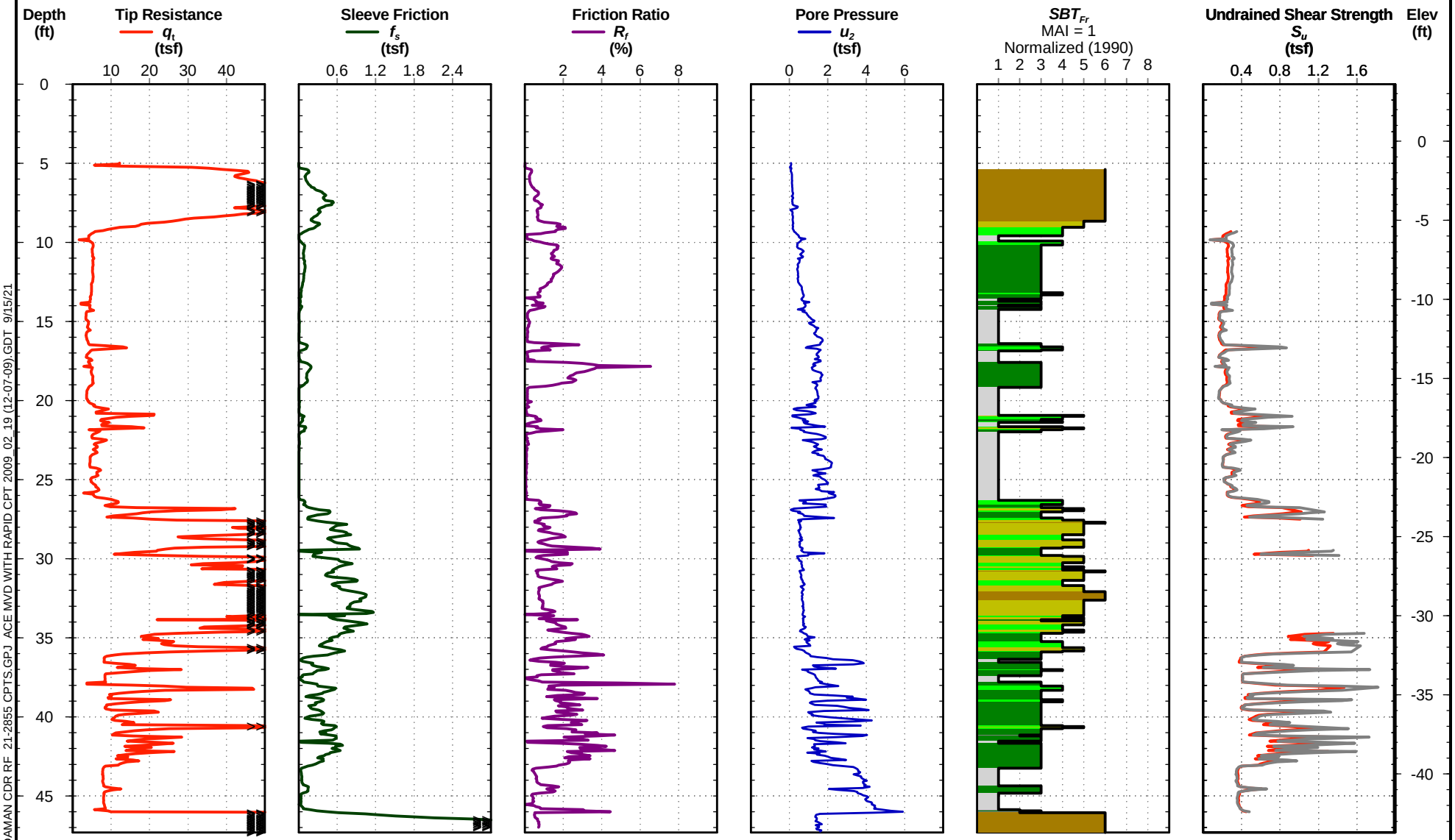

Notes:
-Robertson (1990) Normalized Soil Behavior Type (SBT) Friction Ratio.
-Test performed in general accordance with ASTM D5778-07
Page 1 of 1

1 - Sensitive, fine grained
2 - Organic soils - clay
3 - Clays - silty clay to clay
4 - Silt mixtures - clayey silt to silty clay
5 - Sand mixtures - silty sand to sandy silt
6 - Sands - clean sand to silty sand
7 - Gravelly sand to dense sand
8 - Very stiff sand to clayey sand *
9 - Very stiff, fine grained *

Su (2) = (qt - total vertical stress)/Nkt [Nkt = 15]
Su (6) = qc/Nc* [Nc = 20]

Termination Note: Maximum Reaction Force

* Overconsolidated or Cemented

CPT REPORT - ARDAMAN CDR RF 21-2855 CPTS.GPJ ACE MVD WITH RAPID CPT 2009_02_19 (12-07-09).GDT 9/15/21

APPENDIX II

LEGEND AND NOTES FOR LOG OF CONE PENETROMETER TEST RESULTS

SYMBOL	SOIL TYPE (Robertson, 1986)
	SENSITIVE FINE GRAINED (1)
	ORGANIC MATERIAL (2)
	CLAY (3)
	SILTY CLAY TO CLAY (4)
	CLAYEY SILT TO SILTY CLAY (5)
	SANDY SILT TO CLAYEY SILT (6)
	SILTY SAND TO SANDY SILT (7)
	SAND TO SILTY SAND (8)
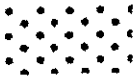	SAND (9)
	GRAVELLY SAND TO SAND (10)

CPT Parameters

qc Tip resistance in tons per square foot

fs Sleeve friction resistance in pounds per square foot

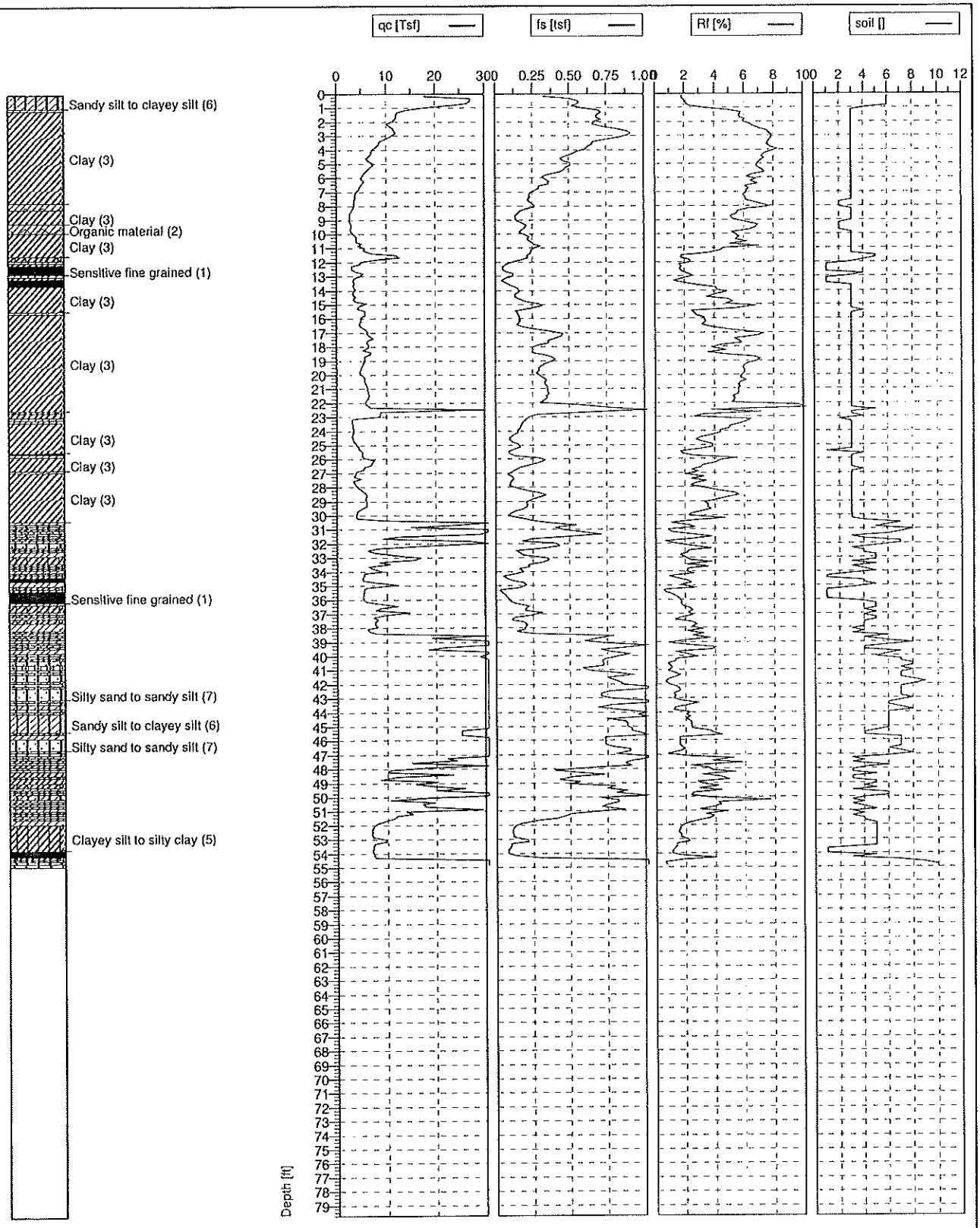

U2

Cone No: DTA1061
Tip area [cm2]: 10
Sleeve area [cm2]: 150

Test no: CPT-13	Position: N29°57'41.4", W90°07'55.0"		Ground level:
Client: USACE - CARROLLTON WATER PLANT POWER COMPLEX		Date: 5/5/2009	Scale: 1 : 120
Project: NEW ORLEANS, LOUISIANA		Page: 1/1	Fig:
CONTRACT NO. W912P8-07-D-0059		File: cpt-13.cpd	

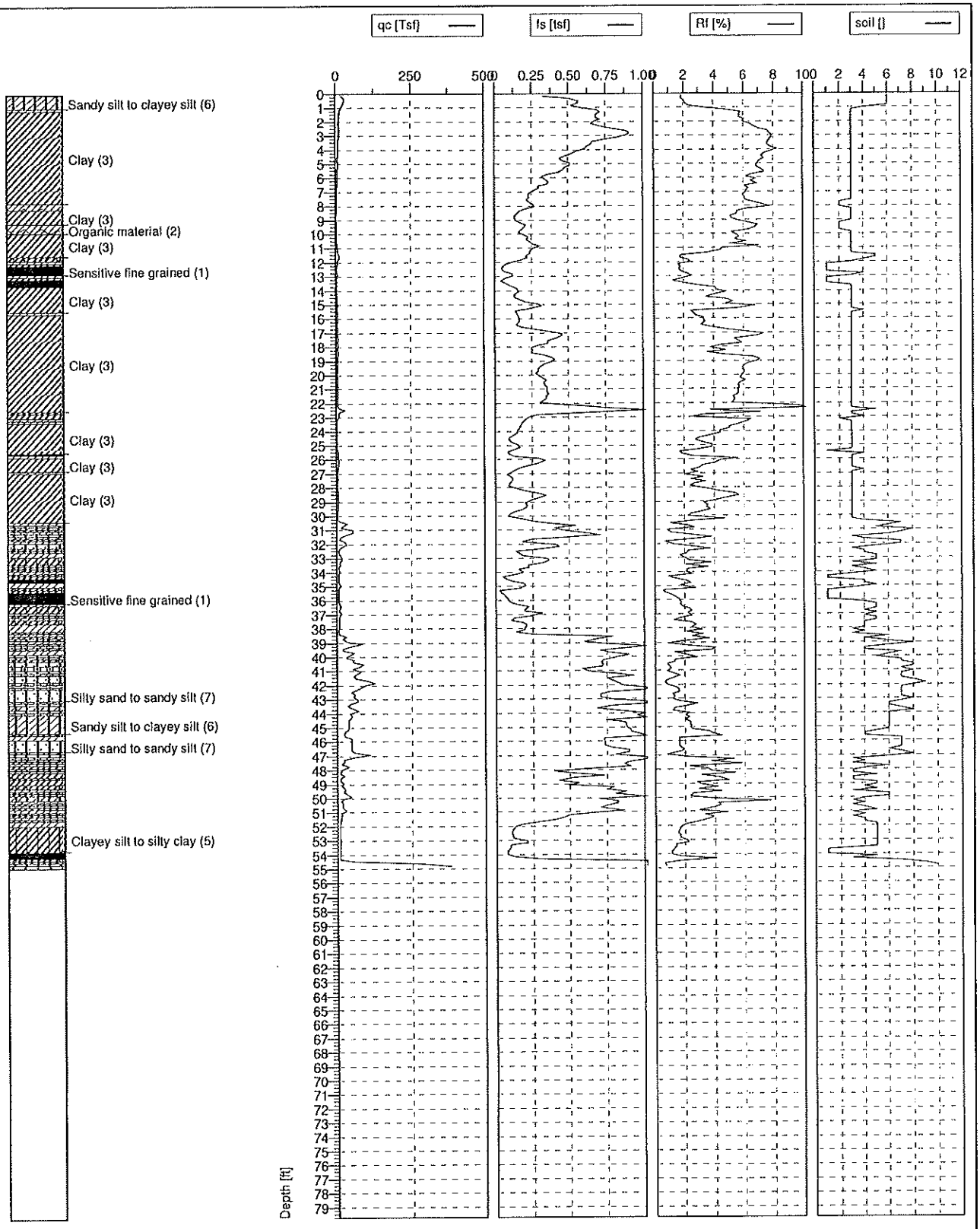

U2

Cone No: DTA1061
Tip area [cm2]: 10
Sleeve area [cm2]: 150

Test no: CPT-13	Position: N29°57'41.4", W90°07'55.0"	Ground level:
Client: USACE - CARROLLTON WATER PLANT POWER COMPLEX		Date: 5/5/2009 / Scale: 1 : 120
Project: NEW ORLEANS, LOUISIANA		Page: 1/1 / Fig:
CONTRACT NO. W912P8-07-D-0059		File: cpt-13.cpd

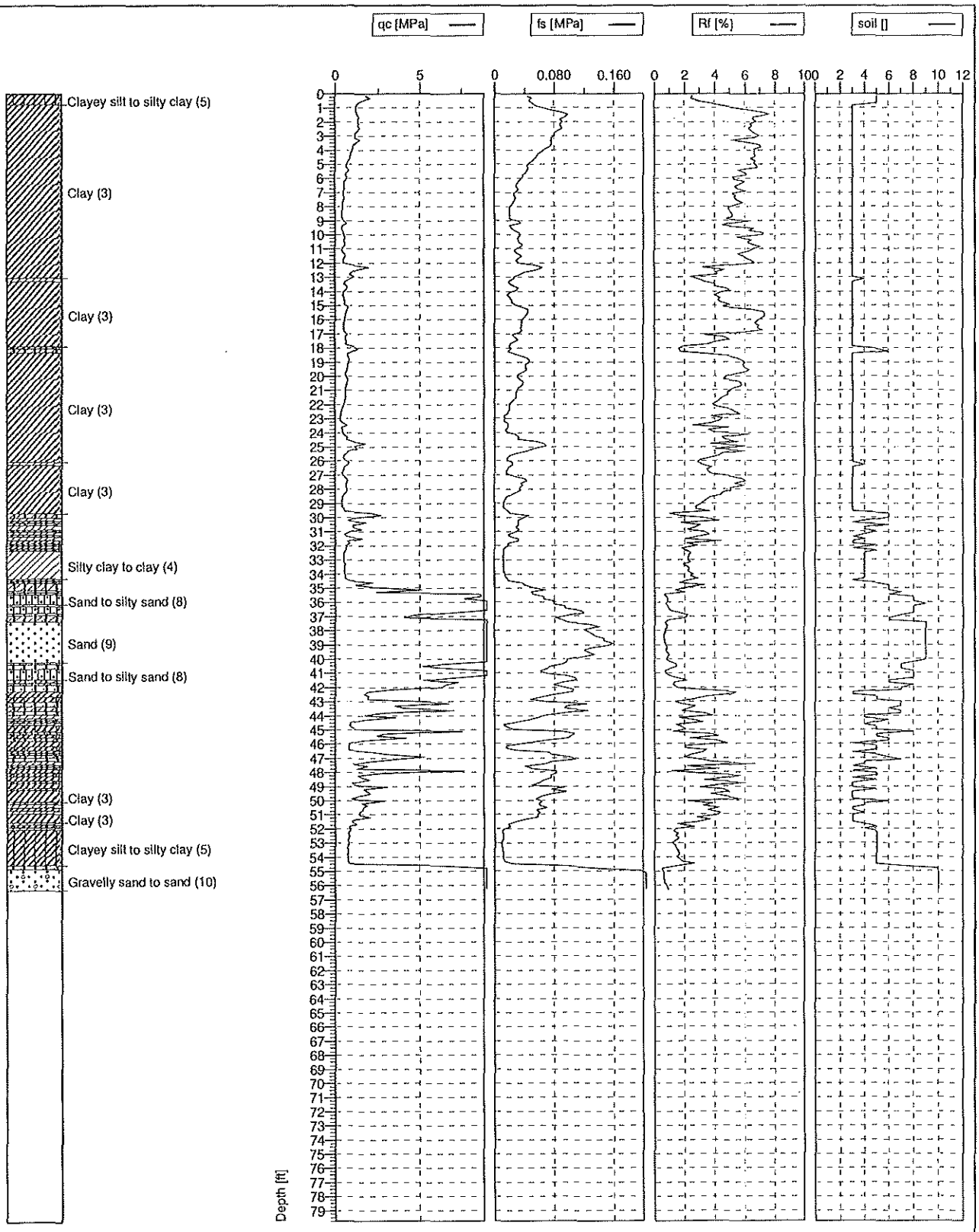

U2

Cone No: DTA1061
Tip area [cm2]: 10
Sleeve area [cm2]: 150

Test no: CPT-14	Position: N29°57'43.8", W90°07'53.6"	Ground level:
Client: USACE - CARROLLTON WATER PLANT POWER COMPLEX		Date: 5/5/2009 / Scale: 1 : 120
Project: NEW ORLEANS, LOUISIANA		Page: 1/1 / Fig:
CONTRACT NO. W912P8-07-D-0059		File: cpt-14.cpd

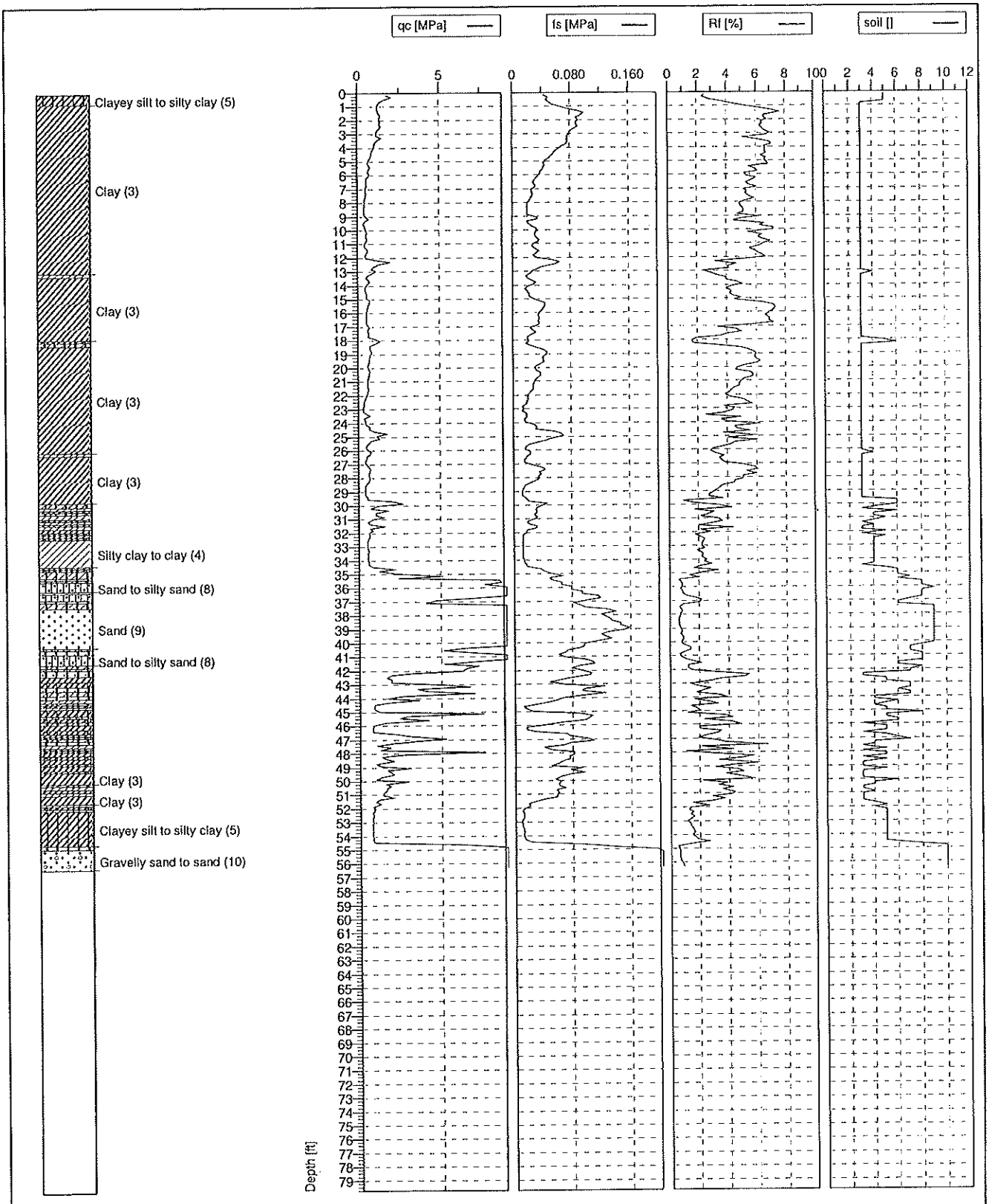

U2

Cone No: DTA1061
Tip area [cm2]: 10
Sleeve area [cm2]: 150

Test no: CPT-14	Position: N29°57'43.8", W90°07'53.6"	Ground level:	
Client: USACE - CARROLLTON WATER PLANT POWER COMPLEX		Date: 5/5/2009	Scale: 1 : 120
Project: NEW ORLEANS, LOUISIANA		Page: 1/1	Fig:
CONTRACT NO. W912P8-07-D-0059		File: cpt-14.cpd	

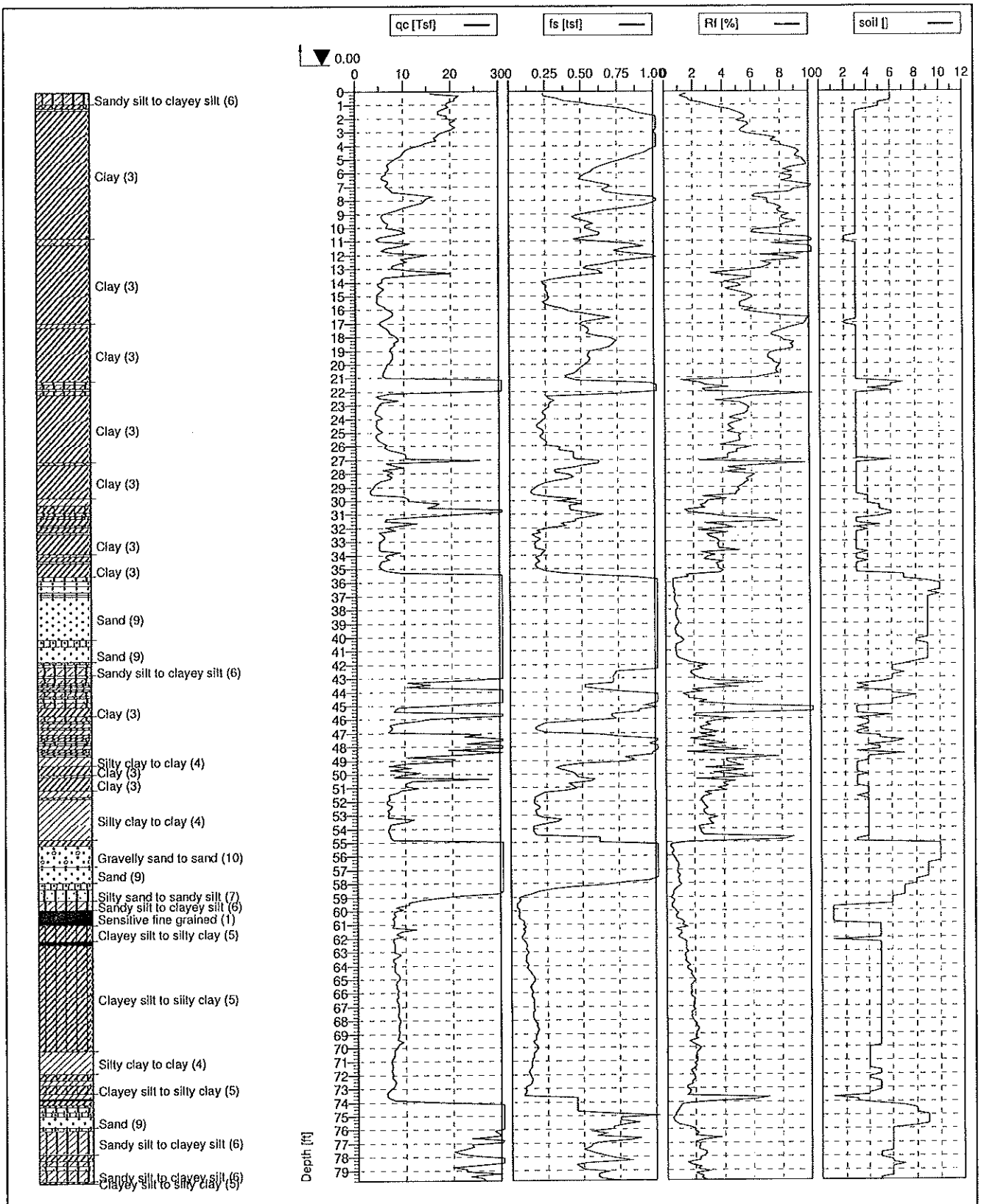

U2

Cone No: DTA1061
Tip area [cm2]: 10
Sleeve area [cm2]: 150

Test no: CPT-15	Position: N29°57'46.6", W90°07'51.8"	Ground level:
Client: USACE - CARROLLTON WATER PLANT POWER COMPLEX		Date: 5/5/2009 / Scale: 1 : 120
Project: NEW ORLEANS, LOUISIANA		Page: 1/2 / Fig:
CONTRACT NO. W912P8-07-D-0059		File: cpt-15.cpd

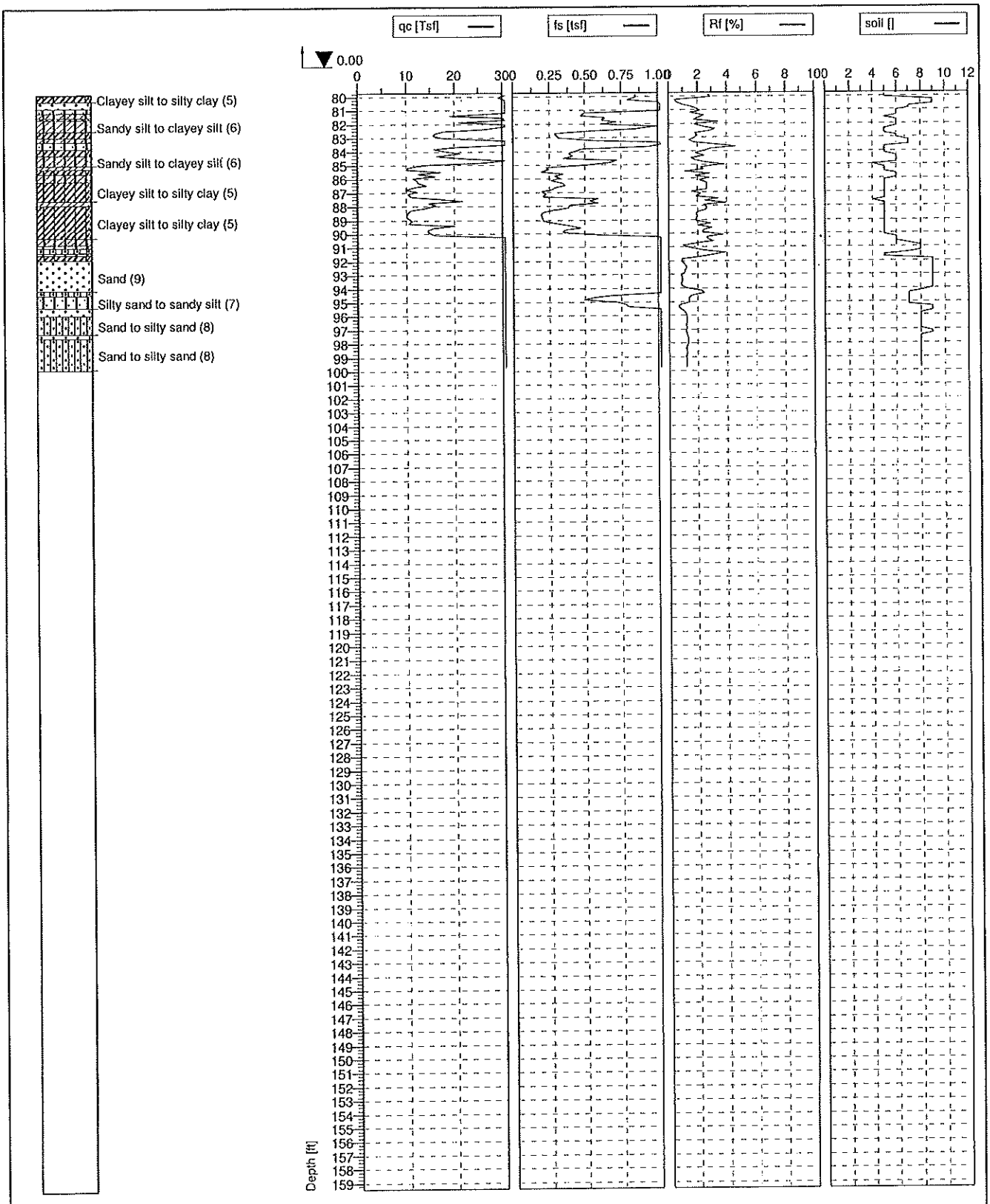

U2

Cone No: DTA1061
Tip area [cm2]: 10
Sleeve area [cm2]: 150

Test no: CPT-15	Position: N29°57'46.6", W90°07'51.8"		Ground level:
Client: USACE - CARROLLTON WATER PLANT POWER COMPLEX		Date: 5/5/2009	Scale: 1 : 120
Project: NEW ORLEANS, LOUISIANA		Page: 2/2	Fig:
CONTRACT NO. W912P8-07-D-0059		File: cpt-15.cpd	

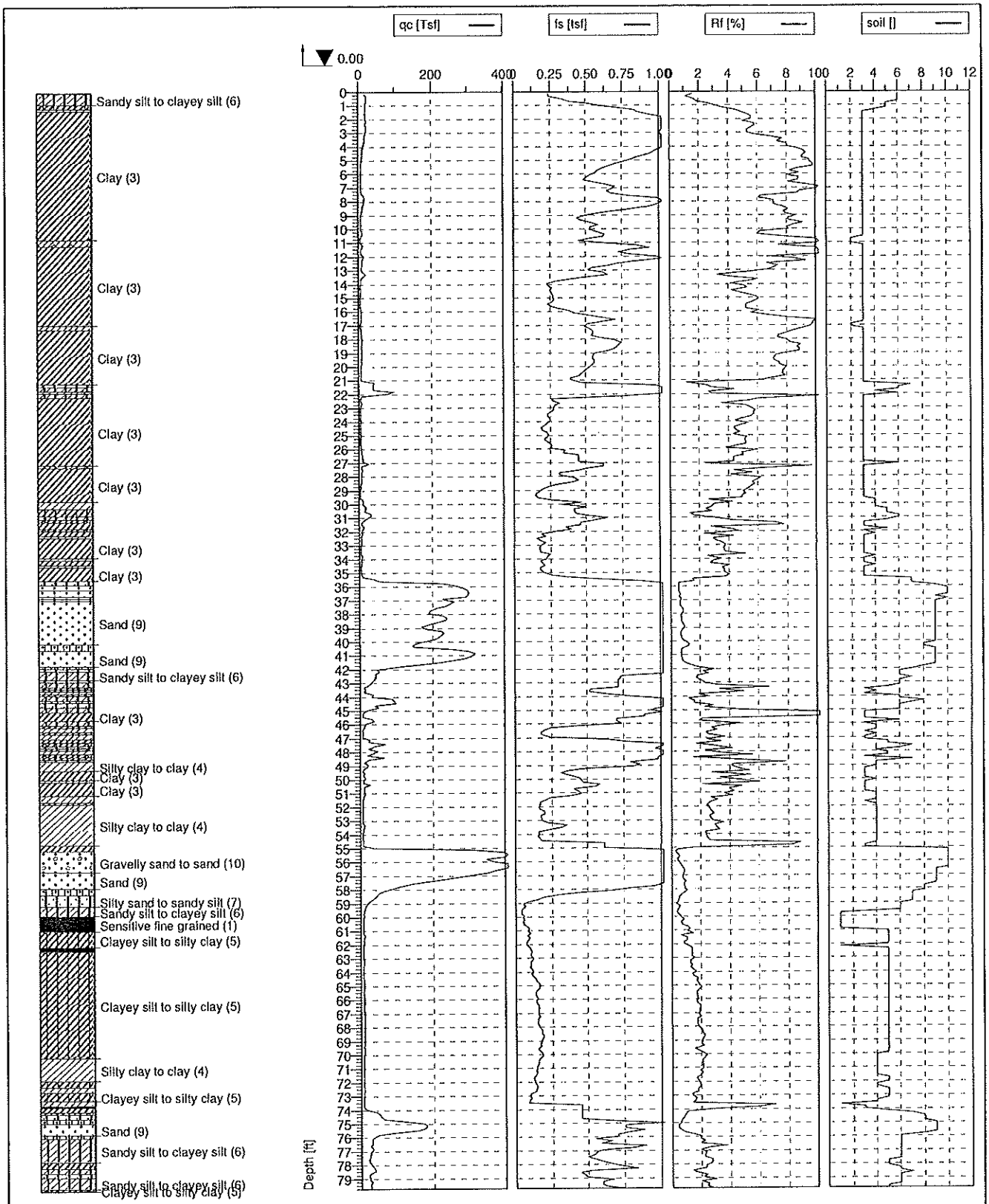

U2

Cone No: DTA1061
Tip area [cm2]: 10
Sleeve area [cm2]: 150

Test no: CPT-15	Position: N29°57'46.6", W90°07'51.8"	Ground level:
Client: USACE - CARROLLTON WATER PLANT POWER COMPLEX		Date: 5/5/2009 / Scale: 1 : 120
Project: NEW ORLEANS, LOUISIANA		Page: 1/2 / Fig:
CONTRACT NO. W912P8-07-D-0059		File: cpt-15.cpd

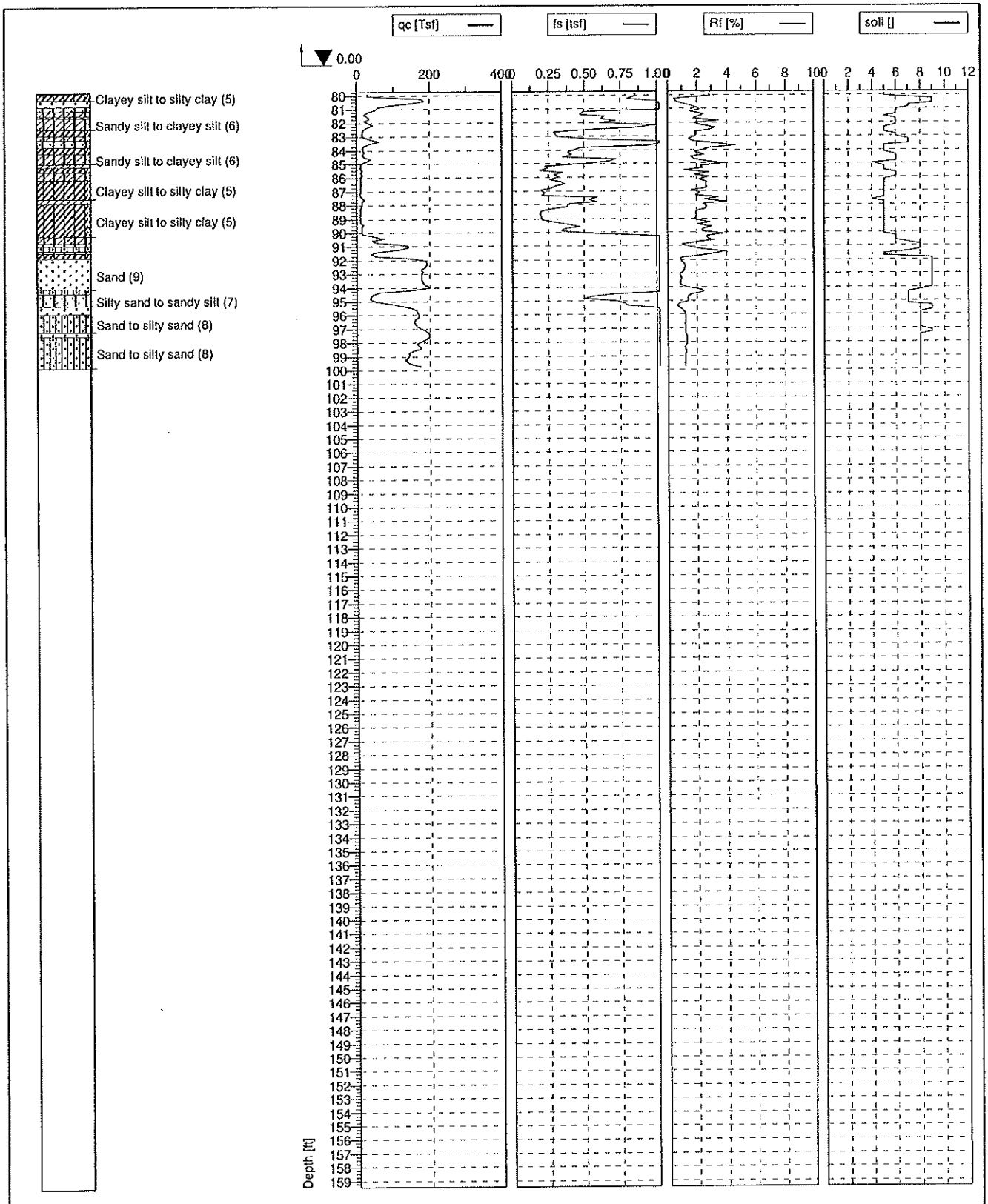

U2

Cone No: DTA1061
Tip area [cm2]: 10
Sleeve area [cm2]: 150

Test no: CPT-15	Position: N29°57'46.6", W90°07'51.8"	Ground level:
Client: USACE - CARROLLTON WATER PLANT POWER COMPLEX		Date: 5/5/2009 / Scale: 1 : 120
Project: NEW ORLEANS, LOUISIANA		Page: 2/2 / Fig:
CONTRACT NO. W912P8-07-D-0059		File: cpt-15.cpd

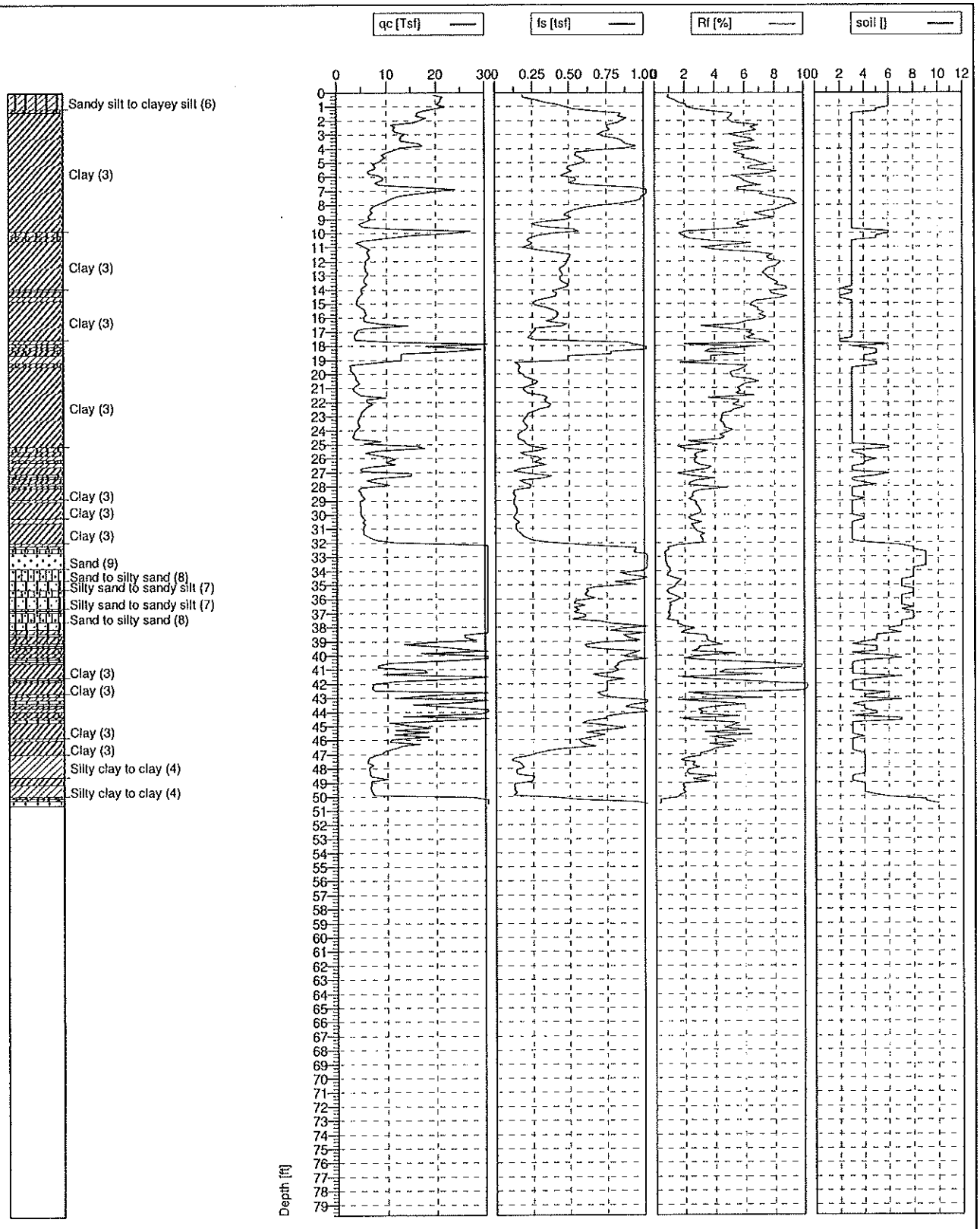

U2

Cone No: DTA1061
Tip area [cm2]: 10
Sleeve area [cm2]: 150

Test no: CPT-16	Position: N29°57'49.3", W90°07'50.8"	Ground level:
Client: USACE - CARROLLTON WATER PLANT POWER COMPLEX		Date: 5/6/2009 / Scale: 1 : 120
Project: NEW ORLEANS, LOUISIANA		Page: 1/1 / Fig:
CONTRACT NO. W912P8-07-D-0059		File: cpt-16.cpd

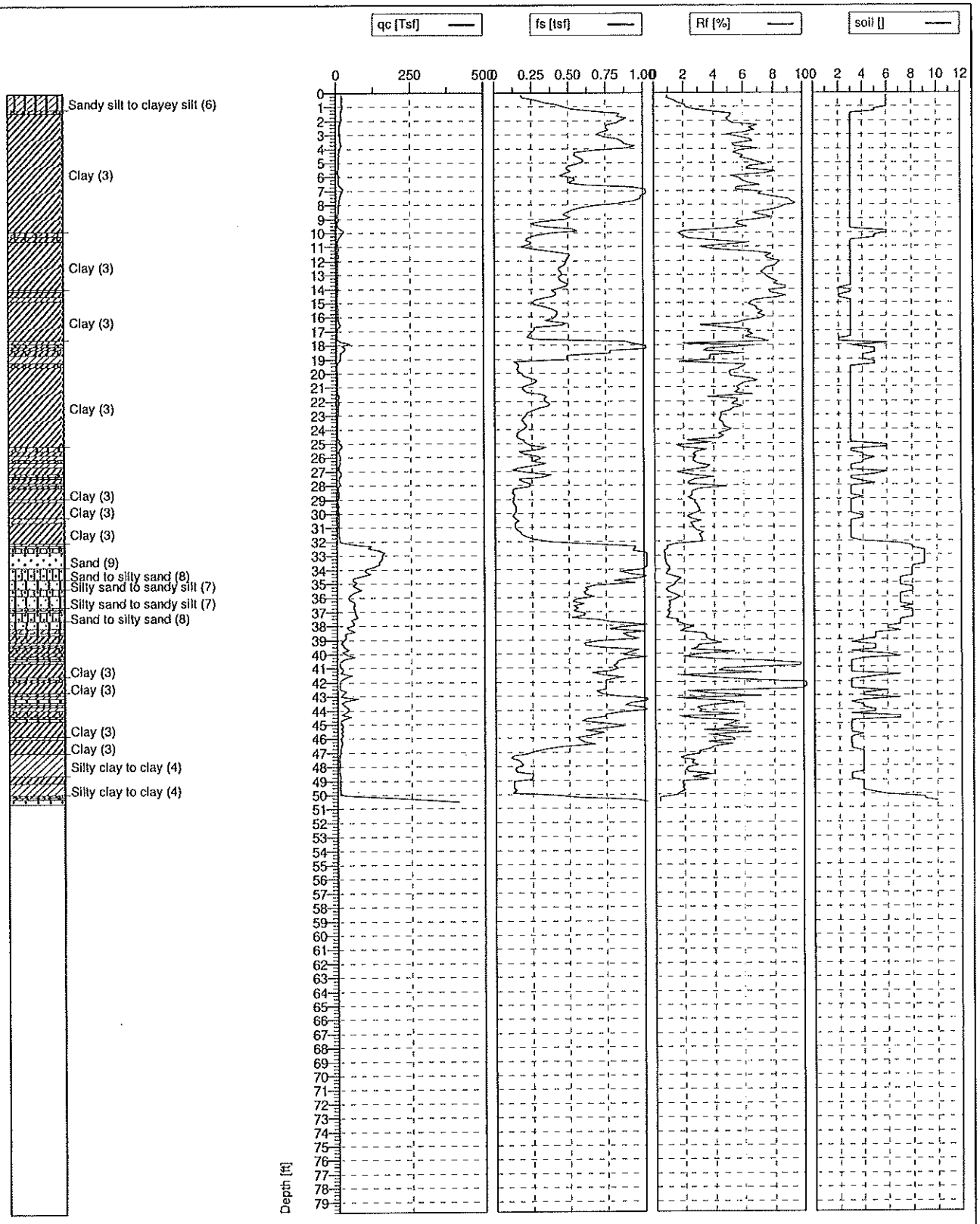

U2

Cone No: DTA1061
Tip area [cm2]: 10
Sleeve area [cm2]: 150

Test no: CPT-16	Position: N29°57'49.3", W90°07'50.8"	Ground level:
Client: USACE - CARROLLTON WATER PLANT POWER COMPLEX		Date: 5/6/2009 / Scale: 1 : 120
Project: NEW ORLEANS, LOUISIANA		Page: 1/1 / Fig:
CONTRACT NO. W912P8-07-D-0059		File: cpt-16.cpd

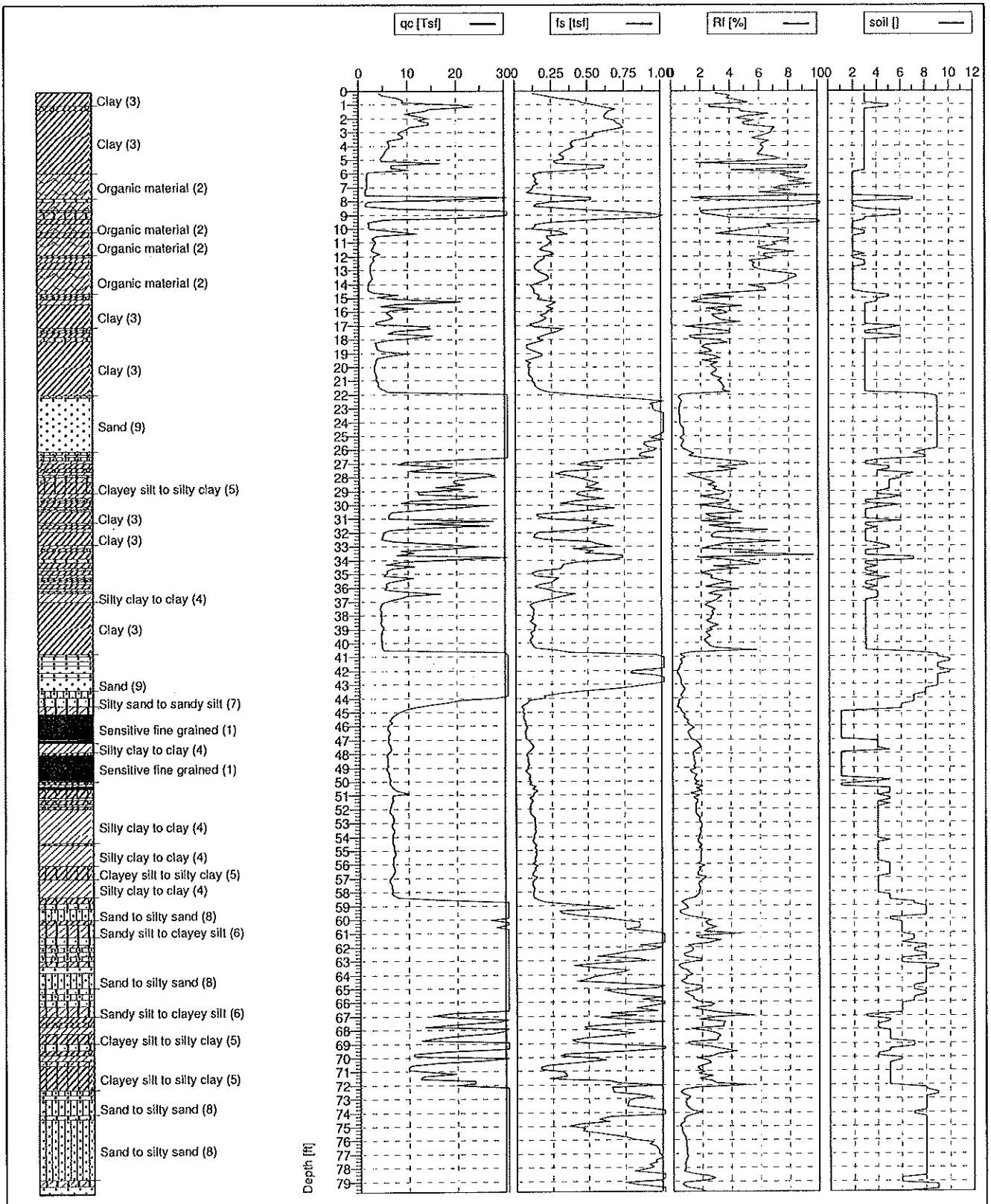

U2

Cone No: DTG0704
Tip area [cm2]: 10
Sleeve area [cm2]: 150

Test no: CPT-17	Position: N29°57.784', W90°07.798'	Ground level:
Client: USACE - CARROLLTON WATER PLANT POWER COMPLEX		Date: 3/26/2009 / Scale: 1 : 120
Project: NEW ORLEANS, LOUISIANA		Page: 1/2 / Fig:
CONTRACT NO. W912P8-07-D-0059		File: cpt-17.cpd

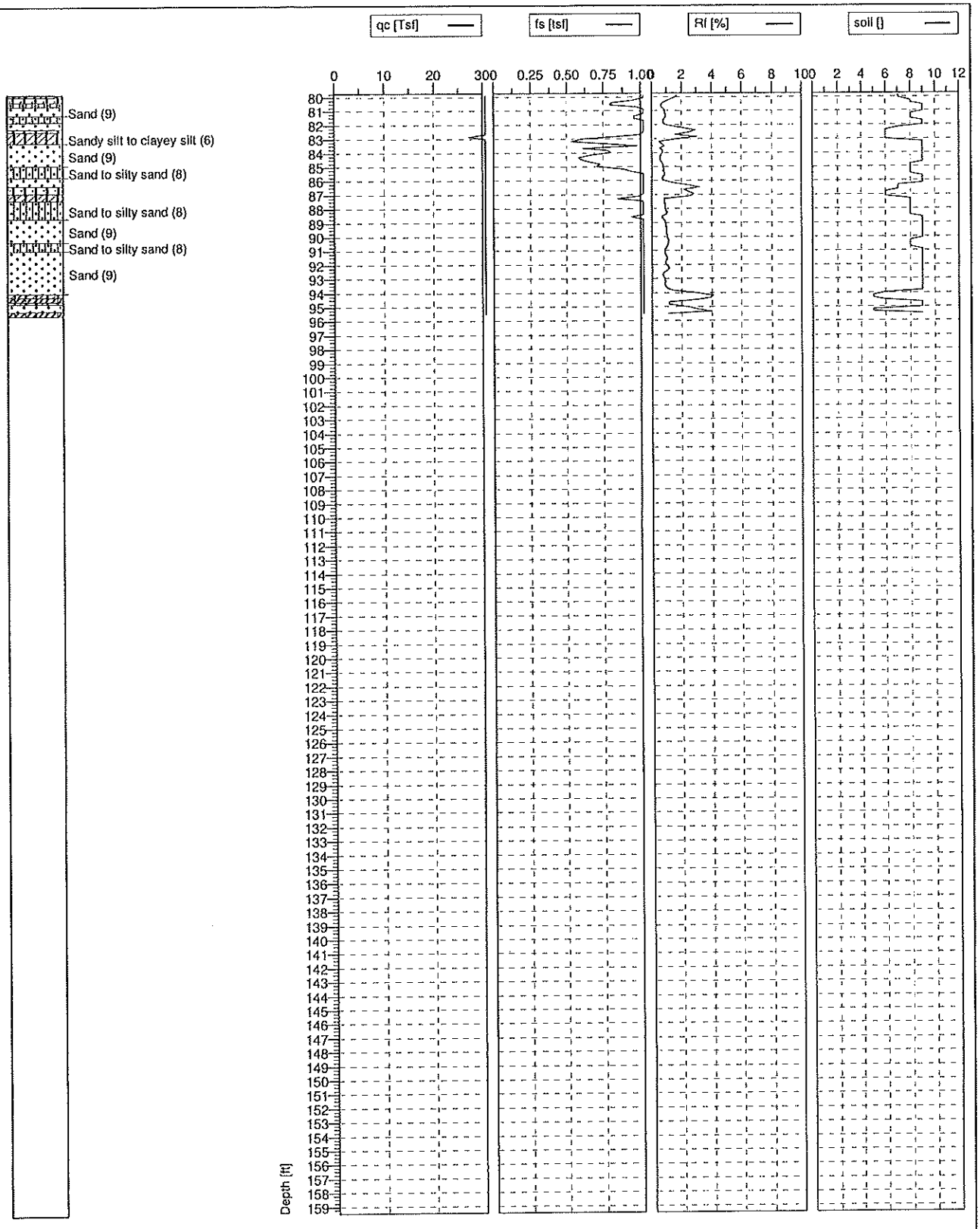

Test no: CPT-17	Position: N29°57.784', W90°07.798'		Ground level:
Client: USACE - CARROLLTON WATER PLANT POWER COMPLEX		Date: 3/26/2009	Scale: 1 : 120
Project: NEW ORLEANS, LOUISIANA		Page: 2/2	Fig:
CONTRACT NO. W912P8-07-D-0059		File: cpt-17.cpd	

U2

Cone No: DTG0704
Tip area [cm2]: 10
Sleeve area [cm2]: 150

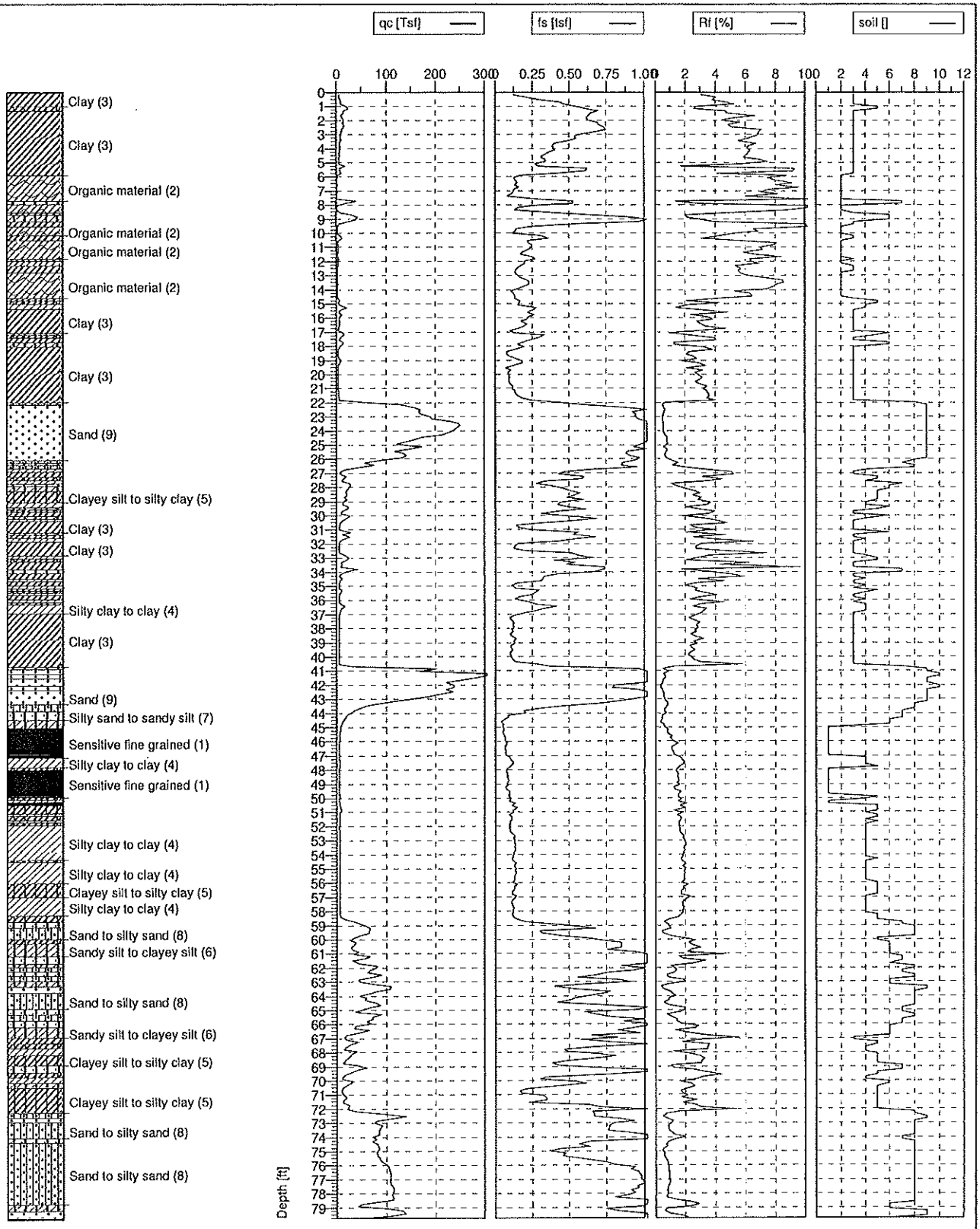

U2

Cone No: DTG0704
Tip area [cm2]: 10
Sleeve area [cm2]: 150

Test no: CPT-17	Position: N29°57.784', W90°07.798'	Ground level:
Client: USACE - CARROLLTON WATER PLANT POWER COMPLEX		Date: 3/26/2009 / Scale: 1 : 120
Project: NEW ORLEANS, LOUISIANA		Page: 1/2 / Fig:
CONTRACT NO. W912P8-07-D-0059		File: cpt-17.cpd

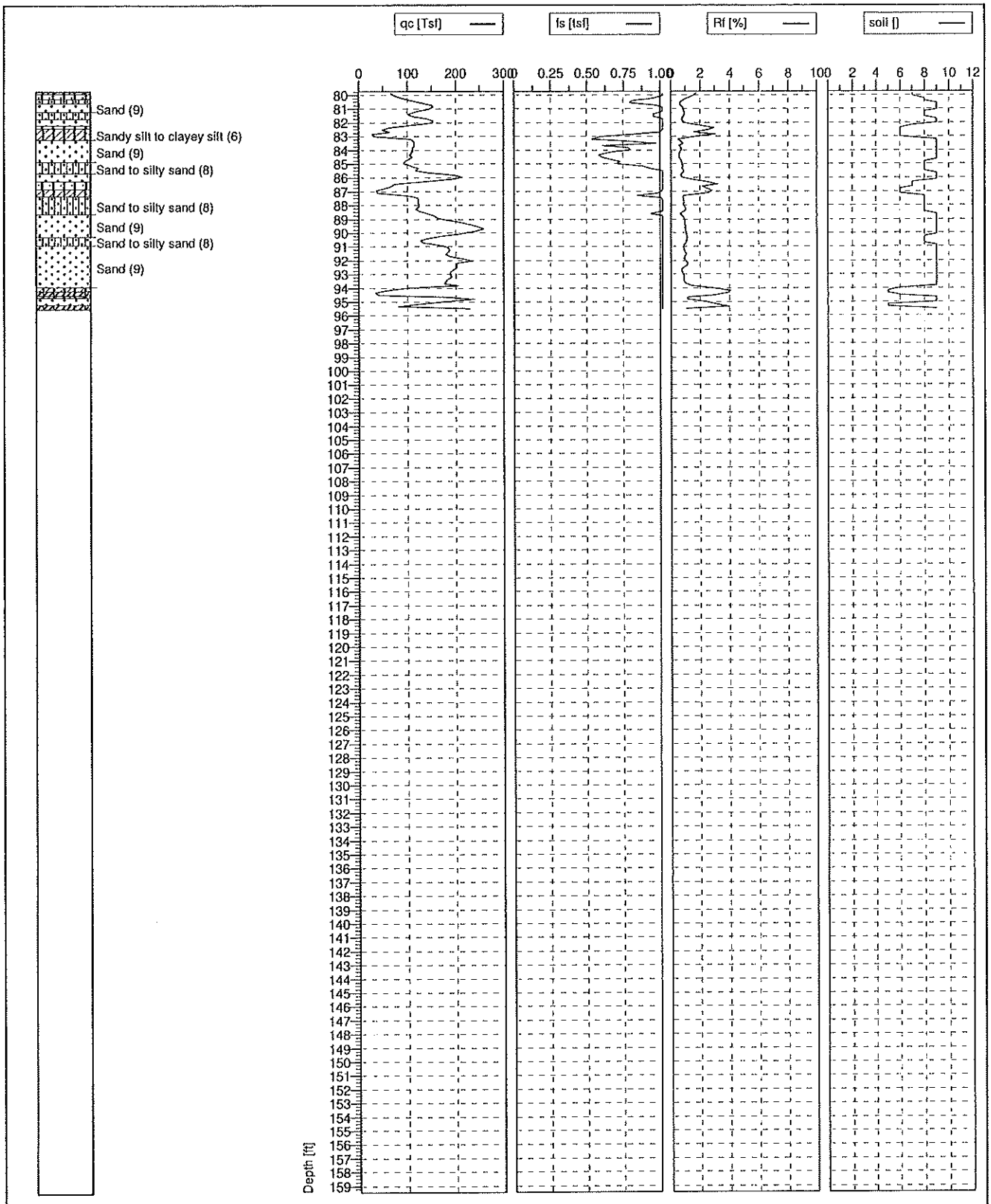

U2

Cone No: DTG0704
Tip area [cm2]: 10
Sleeve area [cm2]: 150

Test no: CPT-17	Position: N29°57.784', W90°07.798'	Ground level:
Client: USACE - CARROLLTON WATER PLANT POWER COMPLEX		Date: 3/26/2009 / Scale: 1 : 120
Project: NEW ORLEANS, LOUISIANA		Page: 2/2 / Fig:
CONTRACT NO. W912P8-07-D-0059		File: cpt-17.cpd

CPT Correlations

References are in parenthesis next to the appropriate equation.

General

p_a=atmospheric pressure (for unit normalization)
q_t=corrected cone tip resistance (tsf)
f_s=friction sleeve resistance (tsf)
$R_f = 100\% \cdot (f_s/q_t)$
u_2=pore pressure behind cone tip (tsf)
u_0=hydrostatic pressure

$B_q = (u_2-u_0)/(q_t-\sigma_{vo})$
$Q_t=(q_t-\sigma_{vo})/ \sigma'_{vo}$
$F_r=100\% \cdot f_s/(q_t-\sigma_{vo})$
$I_c = ((3.47-\log Q_t)^2 + (\log F_r+1.22)^2)^{0.5}$ 2
$I_{SBT} = ((3.47-\log(q_c/p_a))^2+(\log F_r+1.22)^2)^{0.5}$ 23
$I_{c\ J\&D} = \sqrt{\{3 - \log(Q_t \cdot (1 - B_q)\}^2 + [1.5 + 1.3 \cdot \log(F_r)]^2}$ 27
$I_{c\ J\&B} = \sqrt{\{3 - \log(Q_t \cdot (1 - B_q) + 1\}^2 + [1.5 + 1.3 \cdot \log(F_r)]^2}$ 28

K_o

K_0 (1) $K_o = (1-\sin\varphi)OCR^{\sin\varphi}$
K_0 (2) $K_o = 0.1(Q_t)$ 1

Stress History

$OCR = \sigma_p'/\sigma'_{vo}$
OCR (1) $\sigma_p' = 0.33(q_t - \sigma_{vo})$ - clays 8
OCR (2) $\sigma_p' = 0.53(u_2 - u_o)$ - clays 9
OCR (3) $\sigma_p' = 0.60(q_t - u_2)$ - clays 9
OCR (4) $OCR = 0.25\ Q_t^{1.25}$ – clays 37
OCR (5) $OCR = \left[\frac{0.192*(q_t/p_a)^{0.22}}{(1-\sin(\emptyset')\cdot(\sigma'_{v0}/p_a{}^{0.31})}\right]^{\frac{1}{\sin(\emptyset'-0.27)}}$ – sands 35
OCR (6) $\sigma_p' = .101 \cdot p_a{}^{0.102} \cdot G_{max}{}^{0.478} \cdot \sigma'_{v0}{}^{0.420}$ – all soils 36

N-Value

$N_{60} = (q_t/p_a)/[8.5(1-I_c/4.6)]$ 6

Undrained Shear Strength

S_u (1) $S_u = (u_2 - u_o)/N_u$ where $7 \le N_u \le 9$ 10
S_u (2) $S_u = (q_t - \sigma_{vo})/N_{kT}$ where $15 \le N_{kT} \le 20$ 11
S_u (3) $S_u = 0.091 * ((\sigma'_{vo}{}^{0.2}) * (q_t - \sigma_{vo})^{0.8}$ 21
S_u (4) $S_u = (q_c - \sigma_{vo})/N_k$ where $15 \le N_k \le 20$ 11
S_u (5) $S_u = q_t/N_c$ where $XXX \le N_c \le YYY$
S_u (6) $S_u = q_c/N_c$ where $XXX \le N_c \le YYY$

Effective Cohesion

$c' = 0.02 * \sigma_p'$ 38

Drained Friction Angle

φ' (1)	$\varphi' = 17.6 + 11.0\text{Log}[q_t/(\sigma_{vo}')^{0.5}]$	1
φ' (2)	$\varphi' = \arctan[0.1 + 0.38\text{Log}(q_t/\sigma_{vo}')]$	13
φ' (3)	$\varphi' = 30.8\text{Log}[(f_s/\sigma_{vo}')+1.26]$ (for clays or sands)	14
φ' (4)	$\varphi' = 29.5\ B_q^{0.121}\ (0.256 + 0.33\ B_q + \text{Log}(Q_t))$	24

Unit Weight

$\rho = \gamma/\gamma_w$

$\rho = 0.8\text{Log}(V_s)$ V_s in m/sec 17

Relative Density and Void Ratio

D_R (1)	$D_R = 100(q_{c1}/305)^{1/2}$	where, $q_{c1} = q_c/(\sigma_{vo}')^{1/2}$	1
D_R (2)	$D_R = -1.292 + 0.268\ln(q_c \cdot (\sigma_{vo}'^{-0.5}))$		18
D_R (3)	$D_R = (1/2.41)\cdot\ln(q_{c1}/15.7)$		3
D_R (4)	$D_R = 1/2.91 * \ln((q_c/(61* \sigma'^{0.71}_{vo}))*100$		20
D_R (5)	$D_R = 100*(0.268*\ln((q_t/p_a)/(\sigma'_{vo}/p_a)\text{^}0.5) - 0.675)$		34

$e_o = 1.099 - 0.204\log(q_{c1})$ 1

$E_D = 5\ q_t$ $I_D = 2.0 - 0.14(R_f)$ $K_D = E_D/(34.7\cdot I_D\cdot \sigma_{vo}')$

Compressibility

$M(1) = R_m\ E_D$ where R_m= function(I_D, K_D) see the following table 22

$I_D <= 0.6$	$R_M = 0.14 + 2.36 \log K_D$
$I_D >= 3$	$R_M = 0.5 + 2 \log K_D$
$0.6 < I_D < 3$	$R_M = R_{M,D} + (2.5 - R_{M,D})\log K_D$
	$R_{M,D} = 0.14 + 0.15(I_D - 0.6)$
$K_D > 10$	$R_M = 0.32 + 2.18 \log K_D$
$R_M < 0.85$	$R_M = 0.85$

M (2)	$M = q_c\cdot 10^{(1.09-0.0075D}R^{)}$ *sands*	1
M (3)	$M = 8.25\ (q_t - \sigma_{vo})$ *clays*	1
M (4)	$M = \alpha \cdot G_{max}\ where\ 0.02 < \alpha < 2$ and $G_{max}\ is\ from\ Vs$	33

Rigidity Index

$I_R = exp\left[\left(\frac{1.5}{M} + 2.925\right)\cdot\left(\frac{q_t-\sigma_{vo}}{q_t-u_2}\right) - 2.925\right]$ where $M = 6\sin\emptyset'/(3-\sin\emptyset')$ 39

Sensitivity

S_t (1)	$S_t = 7.5/R_f$	2
S_t (2)	$S_t = (q_t - \sigma_{vo})/(15\cdot f_s)$	2

Fines Content

$FC = [(3.58-\log(q_t))^2+(1.43+\log(R_f))^2]^{1.8}$ 4

$FC = [5.31(I_{cfs})^{2.31}]+9.61$, where $I_{cfs} = [(1.95-\text{Log}Q_t)^2+(\log F_r+1.78)^2]^{0.5}$

Shear Wave Velocity

$V_s(1) = 277 \cdot q_t^{0.13} \cdot {\sigma'_{vo}}^{0.27}$ (sands) - m/s and MPa 29

$V_s(2) = 1.75 \cdot q_t^{0.627}$ (clays) - m/s and kPa 30

$V_s(3) = (10.1 \cdot \log q_t - 11.4)^{1.67} \cdot (\frac{f_s}{q_t} \cdot 100)^{0.3}$ (all soils) – m/s and kPa 31

$V_s(4) = 118.8 \cdot \log f_s + 18.5$ (all soils) – m/s and kPa 32

$G_{max} = \rho V_s^2$

Hydraulic Conductivity

Lookup based on SBT and SBTn (1986 and 1990) 40

Normalized Soil Behavior Types - Robertson & Campanella (1990)

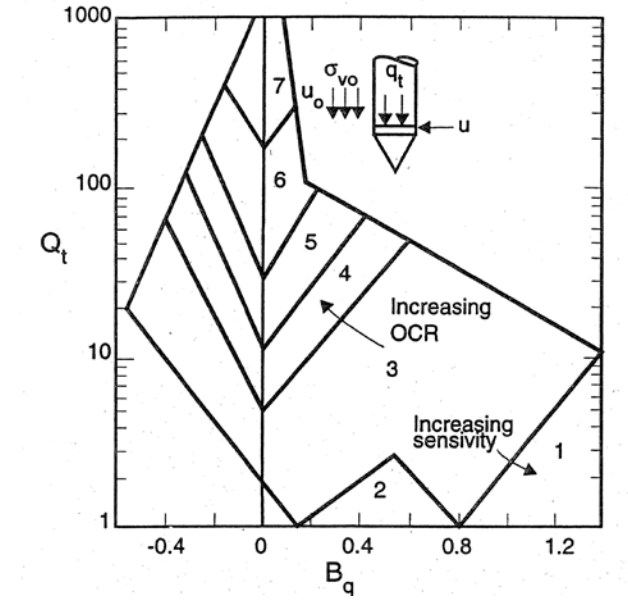

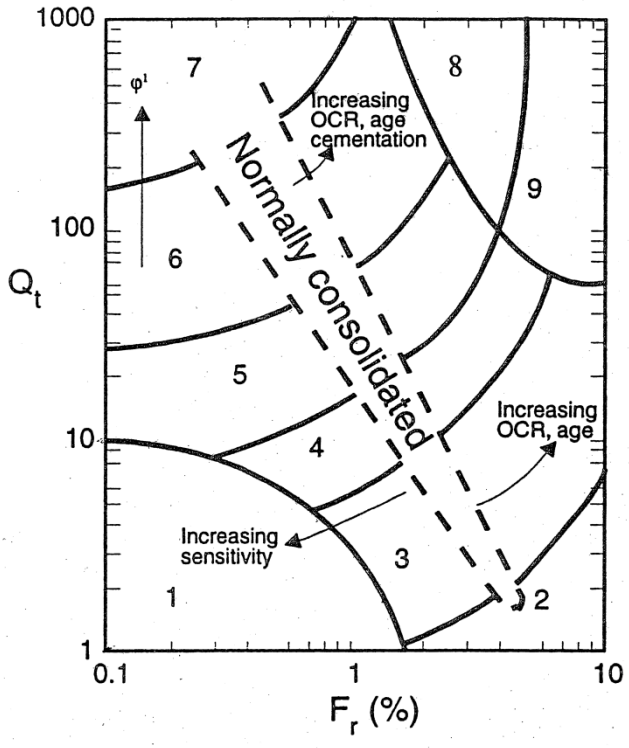

Non-Normalized Soil Behavior Types – Robertson & Campanella (1986)

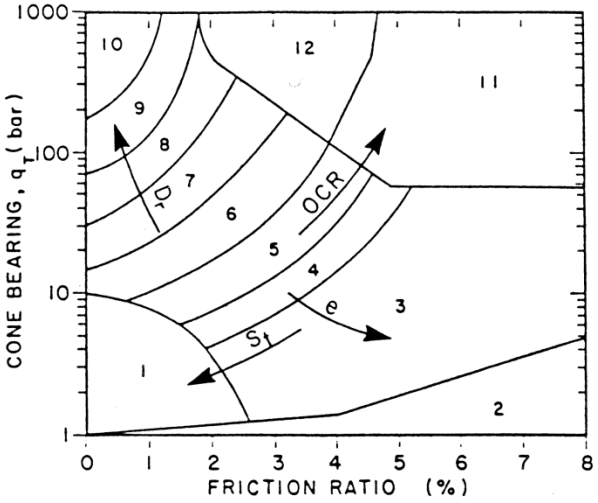

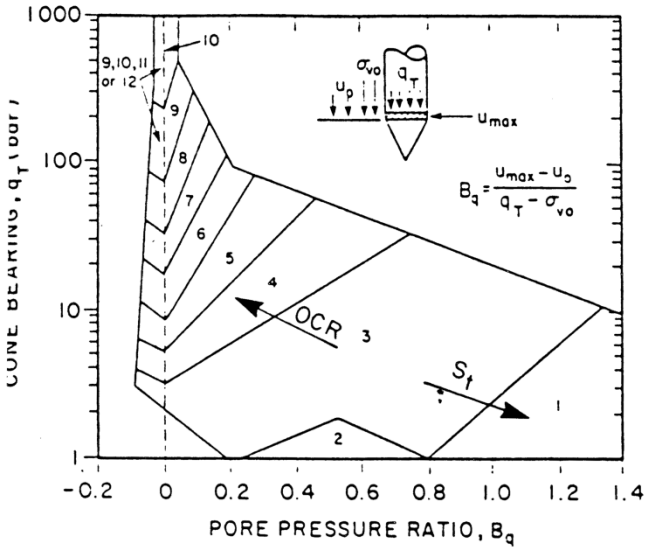

References

1. Kulhawy, F. H., and Mayne, P. W., (1990), "Manual for estimating soil properties for foundation design.", *Report EL-6800,* EPRI, Palo Alto, CA.
2. Lunne, T., Robertson, P.K., and Powell, J.J.M. (1997) Cone Penetration Testing in Geotechnical Practice
3. Baldi, G, Bellotti, R., Ghionna, V., Jamiolkowski, M. and Pasqualini, E. (1986), Interpretation of CPTs and CPTUs; 2nd part: drained penetration of sands, Proceedings of the 4th International Geotechnical Seminar, Singapore.
4. Syms, Frank (2001), Savannah River Site Bechtel Corporation, CPTU Fines Content Determination, Calculation No. K-CIC-G-00065 Revision 0.
5. Marchetti, S. (1980), "In-situ tests by flat dilatometer.", *Journal of Geotechnical Engineering*, Vol. 107, GT3
6 . Jefferies, M. G. and Davies, M. P., (1993), "Use of CPTu to estimate equivalent SPT N_{60}", *ASTM Geotechnical Testing Journal*, Vol. 16, No. 4
7. Robertson, P. K., Campanella, R. G., Gillespie, D. and Grieg, J. (1986), "Use of piezometers cone data". *Proceedings of the ASCE Specialty Conference In Situ '86: Use of In Situ Tests in Geotechnical Engineering*, Blacksburg, VA
8. Mayne, P. W., (1995), "Profiling yield stresses in clays by in situ tests.", *Transportation Research Record No. 1479: Engineering Properties and Practice in Overconsolidated Clays*. National Academy Press, Washington, D.C.
9. Chen, B. S. Y., and Mayne, P. W., (1996), "Statistical relationships between piezocone measurements and stress history of clays", *Canadian Geotechnical Journal*, Vol. 33, No. 3
10. Mayne, P. W. and Holtz, R. D., (1988), "Profiling stress history from piezocone soundings.", *Soils and Foundations*. Vol 28, No. 1
11. Aas, G., Lacasse, S., Lunne, T. and Höeg, K. (1986), "Use of in situ tests for foundation design on clay", *Proceedings of the ASCE Specialty Conference In Situ '86: Use of In Situ Tests in Geotechnical Engineering*, Blacksburg, VA
12. Schmertmann, J. H., (1988) Guidelines for Using the CPT, CPTu, and Marchetti DMT for Geotechnical Design: Volume III – DMT Test Methods and Data Reduction. FHWA-PA-87-024+84-24
13. Robertson, P. K., and Campanella, R. G., (1983), "Interpretation of cone penetrometer test: Part I: Sand". *Canadian Geotechnical Journal*, 20(4)
14. Masood & Mitchell (1993)
15. Robertson, P. K., and Campanella, R. G., (1991), "Use and interpretation of research Dilatometer". *Canadian Geotechnical Journal*, 28(1)
16. Marchetti, S. (1997), "The flat Dilatometer design applications", Third Geotechnical Engineering Conference, Cairo University
17. Mayne (1999) Course Notes
18. Jamiolkowski et al (1985)
19. Reyna & Chameau (1991)
20. Lunne & Christofferson (1983)
21. Wright, S. G, and Duncan, J. M. (2006), Notes for the Short Course "Shear Strength & Slope Stability"

22. Mayne, P.W. “Equivalent CPT Method for Calculating Shallow Foundation Settlements in the Piedmont Residual Soils Based on the DMT Constrained Modulus Approach.” http://geosystems.ce.gatech.edu/Faculty/Mayne/papers/

23. Robertson, P.K. (2010) “Soil behavior type from the CPT: an update” 2nd International Symposium on Cone Penetration Testing, Huntington Beach California

24. Mayne, P.W. and Campanella, R.G., “Versatile Site Characterization by Seismic Piezocone,” *Proceedings, 16th International Conference on Soil Mechanics and Geotechnical Engineering*, Vol. 2 (Osaka), Millpress, Rotterdam, The Netherlands, 2005, pp. 721–724.

25. Zhang Z. and Tumay, M. (1999) “Statistical to Fuzzy Approach Toward CPT Classification” *Journal of Geotechnical Engineering*, Vol. 125, No 3

26. Schneider et al. (2008) “Analysis of Factors Influencing Soil Classification Using Normalized Piezocone Tip Resistance and Pore Pressure Parameters” *Journal of Geotechnical Engineering*, November 2008

27. Jefferies, M.G. and M.P. Davies, “Use of CPTu to Estimate Equivalent SPT N60,” *Geotechnical Testing Journal*, Vol. 16, No. 4, Dec. 1993, pp. 458–468.

28. Jefferies, M. and Been, K. 2006. *Soil Liquefaction: A Critical State Approach*, Taylor and Francis Group, London: 480 p.

29. Baldi, G., R. Bellotti, V.N. Ghionna, M. Jamiolkowski, and D.C.F. LoPresti, “Modulus of Sands from CPTs and DMTs,” *Proceedings, 12th International Conference on Soil Mechanics and Foundation Engineering*, Vol. 1, Rio de Janeiro, Brazil, 1989, Balkema, Rotterdam, The Netherlands, pp. 165–170.

30. Mayne, P.W. and G.J. Rix, “Correlations Between Shear Wave Velocity and Cone Tip Resistance in Clays,” *Soils & Foundations*, Vol. 35, No. 2, 1995, pp. 107–110.

31. Hegazy, Y.A. and P.W. Mayne, “Statistical Correlations Between *Vs* and CPT Data for Different Soil Types,” *Proceedings, Symposium on Cone Penetration Testing*, Vol. 2, Swedish Geotechnical Society, Linköping, Sweden, 1995, pp. 173–178.

32. Mayne, P.W., “The 2nd James K. Mitchell Lecture: Undisturbed Sand Strength from Seismic Cone Tests,” *Geomechanics and Geoengineering*, Vol. 1, No. 4, 2006, pp. 239–247.

33. Burns, S.E. and P.W. Mayne, “Interpretation of Seismic Piezocone Results for the Evaluation of Hydraulic Conductivity in Clays,” *Geotechnical Testing Journal*, Vol. 25, No. 3, 2002b, pp. 333–340.

34. Jamiolkowski, M., D.C.F. LoPresti, and M. Manassero, “Evaluation of Relative Density and Shear Strength of Sands from Cone Penetration Test and Flat Dilatometer Test,” *Soil Behavior and Soft Ground Construction* (GSP 119), American Society of Civil Engineers, Reston, Va., 2001, pp. 201–238.

35. Mayne, P.W., “Integrated Ground Behavior: In-Situ and Lab Tests,” *Deformation Characteristics of Geomaterials*, Vol. 2 (Proc. Lyon, France), Taylor & Francis, London, United Kingdom, 2005, pp. 155–177.

36. Mayne, P.W. and D.A. Brown, “Site Characterization of Piedmont Residuum of North America,” *Characterization and Engineering Properties of Natural Soils*, Vol. 2, Swets and Zeitlinger, Lisse, The Netherlands, 2003, pp. 1323–1339.

37. Robertson, P.K. (2009) “Performance based earthquake deisng using the CPT”, Keynote lecture, IS-Tokyo

38. Mayne, P.W. and H.E. Stewart, “Pore Pressure Response of *K*0 Consolidated Clays,” *Journal of Geotechnical Engineering*, Vol. 114, No. 11, 1988, pp. 1340–1346.

39. Mayne, P.W., “Stress-Strain-Strength-Flow Parameters from Enhanced In-Situ Tests,” *Proceedings, International Conference on In-Situ Measurement of Soil Properties and Case Histories*, Bali, Indonesia, 2001, pp. 27–48.

40. Robertson, P.K. and Cabal, K.L. “Guide to Cone Penetration Testing for Geotechnical Engineering” Gregg Drilling & Testing, Inc. 2009 pp 41-42.

EUSTIS ENGINEERING SINCE 1946

LEGEND AND NOTES FOR LOG OF BORING AND TEST RESULTS

PP Pocket penetrometer: Resistance in tons per square foot

SPT Standard Penetration Test: Number of blows of a 140-lb hammer dropped 30 inches required to drive 2-in. O.D., 1.4-in. I.D. sampler a distance of 1 foot into the soil after first seating it 6 inches. Values shown have not been corrected.

SPLR Type of Sampling  Shelby  SPT  Auger  Vibracore  Geoprobe  No sample

SYMBOL Clay  Silt  Sand  Peat/Humus  Shells  Stone/Gravel 

Predominant type shown heavy; modifying type shown light

USC Unified Soil Classification

DENSITY Unit weight in pounds per cubic foot

SHEAR TESTS

TYPE

- UC Unconfined compression shear
- OB Unconsolidated undrained triaxial compression shear on one specimen confined at the approximate overburden pressure
- UU Unconsolidated undrained triaxial compression shear
- ϕ Angle of internal friction in degrees
- c Cohesion in pounds per square foot

ATTERBERG LIMITS

- LL Liquid Limit
- PL Plastic Limit
- PI Plasticity Index

OTHER TESTS

- CON Consolidation
- -#200 Percent passing a U.S. No. 200 sieve
- SV Particle size distribution (sieve only)
- PD Particle size distribution (sieve and hydrometer)
- k Coefficient of permeability in centimeters per second
- SP Swelling pressure in pounds per square foot

Other laboratory test results reported on separate figures

GENERAL NOTES

(1) If a ground water depth is shown on the boring log, these observations were made at the time of drilling and were measured below the existing ground surface. These observations are shown on the boring logs. However, ground water levels may vary due to seasonal fluctuations and other factors. If important to construction, the depth to ground water should be determined by those persons responsible for construction immediately prior to beginning work.

(2) While the individual logs of borings are considered to be representative of subsurface conditions at their respective locations on the dates shown, it is not warranted that they are representative of subsurface conditions at other locations and times.

EUSTIS ENGINEERING SINCE 1946

Sewerage & Water Board of New Orleans
Carrollton Water Plant Demolition of Two Abandoned Clarifiers

New Orleans, Louisiana

LOG OF BORING AND TEST RESULTS

Boring: B-6

Project No: 23394
Date: 09/28/2017
Latitude: 29.96165°
Longitude: -90.13131°

Elevation: -4.1
Datum: NAVD88
Water Depth: See Text
Total Depth: 20.0 ft

Scale in Feet	PP	SPT	SPLR	Symbol	Visual Classification	USC	Sample Number	Depth in Feet	Water Content %	Density Dry pcf	Density Wet pcf	Shear Tests Type	Shear Tests ϕ	Shear Tests C psf	Atterberg Limits LL	Atterberg Limits PL	Atterberg Limits PI		Other Tests
0					6" Conrete slab		NS	0											
					Gray clay w/silt pockets, decayed wood, & trace of organic matter	CH	1A	0.5	57						105	33	72		
							1B	1.5	78										
							1C	2.5	79										
							1D	3.5	91										
5							2A	5	87										
							2B	6	99										
					Brown & gray organic clay w/wood & roots	OH	2C	7	168										
					Gray & brown clay w/silt pockets, roots, & decayed wood	CH	2D	8	176										
					Brown & gray organic clay w/decayed wood & roots	OH	2E	9	240						246	62	184		
10							3A	10											
					Gray & tan clay w/silt pockets & trace of wood	CH	3B	11.5	76										
							3C1	12	85										
							3C2	12.5	180										
					Brown & gray organic clay w/trace of wood & roots	OH	3D	13	303										ORG = 48.3%
					Dark brown humus w/clay layers & trace of roots	Pt	3E	14	28										-#200 = 63.3%
15					Gray sandy silt w/clay pockets & trace of roots	ML	4A	15	165										
					Gray & dark gray organic clay w/wood & few silt pockets	OH	4B	16	128										
					Gray clay w/trace of silt, humus pockets, & trace of organic matter	CH	4C	17	50										
					Gray silty clay w/some silty sand pockets & trace of decayed wood	CL	4D	18	55						78	23	55		
					Gray clay w/silt lenses & trace of silty sand pockets	CH	4E1	19	40										
					Gray silty clay w/clay & silty sand pockets	CL	4E2	19.75	25										-#200 = 45.7%
20					Gray silty sand w/clay pockets	SM													
25																			

EUSTIS GINT LIBRARY012017.GLB EE STANDARD BORING LOG 23394.GPJ 4/9/18

NOTES: Elevation is as furnished by Gotech, Inc.

EUSTIS ENGINEERING SINCE 1946

LOG OF BORING AND TEST RESULTS

Sewerage & Water Board of New Orleans
Carrollton Water Plant Demolition of Two Abandoned Clarifiers

New Orleans, Louisiana

Boring: B-7

Project No: 23394
Date: 09/28/2017
Latitude: 29.96145°
Longitude: -90.13106°

Elevation: -4.0
Datum: NAVD88
Water Depth: See Text
Total Depth: 20.0 ft

Scale in Feet	PP	SPT	S P L R	Symbol	Visual Classification	USC	Sample Number	Depth in Feet	Water Content %	Density Dry pcf	Density Wet pcf	Shear Tests Type	Shear Tests ϕ	Shear Tests C psf	Atterberg Limits LL	Atterberg Limits PL	Atterberg Limits PI		Other Tests
0					6" Concrete slab		NS	0											
					Gray clay w/few silt pockets, decayed wood, & roots	CH	1A	0.5	63										
							1B	1.5	77										
							1C	2.5	99										
							1D	3.5	101										
							1E	4.5											
5							2A	5	107										
							2B	6	113										
							2C	7	112										
							2D	8	189										
							2E	9	252										
					Brown & gray organic clay w/trace of roots	OH													
10					Gray clay w/few silt pockets & trace of roots	CH	3A	10	100										
					Dark brown & gray organic clay w/wood, humus pockets, & trace of shell fragments	OH	3B	11	180										
							3C	12	201										
							3D	13	183										
							3E1	14	43										
					Gray clay w/clayey silt lenses	CH	3E2	14.75	26										
15					Gray sandy clay w/trace of roots & organic matter	CL	4A	15	227						179	51	128		-#200 = 59.0%
					Gray & brown organic clay w/decayed wood, trace of clay, & silt lenses	OH	4B	16	152										
							4C	17	56										
					Gray clay w/few silt lenses, sandy silt pockets, & fine sand layers	CH	4D	18	48										
							4E	19	37										
20																			
25																			

EUSTIS GINT LIBRARY012017.GLB EE STANDARD BORING LOG 23394.GPJ 4/9/18

NOTES: Elevation is as furnished by Gotech, Inc.

EUSTIS ENGINEERING SINCE 1946

Sewerage & Water Board of New Orleans
Carrollton Water Plant Demolition of Two Abandoned Clarifiers

New Orleans, Louisiana

LOG OF BORING AND TEST RESULTS

Boring: B-8R

Project No: 23394
Date: 09/28/2017
Latitude: 29.96120°
Longitude: -90.13076°

Elevation: -4.0
Datum: NAVD88
Water Depth: See Text
Total Depth: 20.0 ft

Scale in Feet	PP	SPT	S P L R	Symbol	Visual Classification	USC	Sample Number	Depth in Feet	Water Content %	Density Dry pcf	Density Wet pcf	Shear Tests Type	Shear Tests ϕ	Shear Tests C psf	Atterberg Limits LL	Atterberg Limits PL	Atterberg Limits PI		Other Tests
0					Gray clay w/trace of silt pockets & decayed wood	CH	NS	0											
							1A	0.5	59										
							1B	1.5	69										
							1C	2.5	78										
5							1D	3.5											
							2A	5	71										
							2B	6	104										
					Wood	Wd	2C	7	515										
							2D	8											
					Gray & brown organic clay w/wood	OH	2E	9	188										
10					Gray clay w/trace of silt pockets, organic clay pockets, & wood	CH	3A	10	105										
							3B	11	128										
					Gray & brown organic clay w/few shell fragments & roots	OH	3C	12	279										
					Brown & gray humus	Pt	3D	13	305										
					Gray silty sand w/clay pockets & lenses, decayed wood, & roots	SM	3E1	14	29										-#200 = 69.6%
15					Gray clay w/clayey silt lenses	CH	3E2	14.75	54										
					Brown & gray organic clay w/humus pockets	OH	4A	15	248										
					Gray silty clay w/few clay pockets & trace of organic matter	CL	4B	16	53										
					Gray clay w/trace of silt & silty sand pockets	CH	4C	17	68										
					Gray clayey sand	SC	4D1	18	25										-#200 = 28.5%
					Gray clay w/silt pockets & lenses, & fine sand pockets	CH	4D2	18.75	41										
20					Gray clay w/fine sand pockets	CH	4E	19											
25																			

EUSTIS GINT LIBRARY012017.GLB EE STANDARD BORING LOG 23394.GPJ 4/9/18

NOTES: Elevation is as furnished by Gotech, Inc.

EUSTIS ENGINEERING SINCE 1946

LOG OF BORING AND TEST RESULTS

Sewerage & Water Board of New Orleans
Carrollton Water Plant Demolition of Two Abandoned Clarifiers

New Orleans, Louisiana

Boring: G-1

Project No: 23394
Date: 08/01/2017
Latitude: 29.96293°
Longitude: -90.13075°

Elevation: 1.3
Datum: NAVD88
Water Depth: See Text
Total Depth: 30.0 ft

Scale in Feet	PP	SPT	SPLR	Symbol	Visual Classification	USC	Sample Number	Depth in Feet	Water Content %	Density Dry pcf	Density Wet pcf	Shear Tests Type	Shear Tests ϕ	Shear Tests C psf	Atterberg Limits LL	Atterberg Limits PL	Atterberg Limits PI		Other Tests
0					Gray & tan clay w/silt pockets, concretions, trace of gravel, & roots (fill)	CH	1A	0	32										
							1B	1	30										
					possible road base, possible construction haul road - gravel in core		1C	2	32										
							1D	3	43										
					Gray clay w/silt pockets, decayed wood, & trace of concretions	CH	1E	4	46										
5							2A	5	46										
					w/wood = 10%		2B	6	64										
					w/wood present = 20%		2C	7	71						132	39	93		
					very soft		2D	8	98						130	37	93		
					w/wood present		2E	9	82										
10					possible perched water table, sample very saturated, peat below appears to be less saturated		3A	10	83										
							3B	11	111										
					Gray organic clay w/decayed wood w/peat zone & much of wood	OH	3C	12	226										
					Gray clay w/few silt pockets, decayed wood, & humus	CH	3D	13	155										
					Brown & gray organic clay	OH	3E	14	260										
15					No recovery		4A	15											
					Brown & gray organic clay w/clay layers	OH	4B	16.75	151										
							4C	17	270										
					Gray sandy clay	CL	4D	18	40										
					Gray clay w/silty sand layers (small sand layer 1" - 2" thick)	CH	4E	19	44										
20					Gray sandy silt w/clay w/sand	ML	5A	20	36										-#200 = 64.7%, PD
					Gray silty clay w/few fine sand pockets	CL	5B	21	36										
					Gray clay w/few silt pockets & fine sand	CH	5C	22	46										
							5D	23	54										
25					Tan & light gray fine to medium sand w/trace of silt, clay, medium sand, &	SP	5E	24	21										-#200 = 1.5%

EUSTIS GINT LIBRARY\012017.GLB EE STANDARD BORING LOG 23394.GPJ 4/9/18

NOTES: Elevation is estimated from available data.

EUSTIS ENGINEERING SINCE 1946

Sewerage & Water Board of New Orleans
Carrollton Water Plant Demolition of Two Abandoned Clarifiers

New Orleans, Louisiana

LOG OF BORING AND TEST RESULTS

Boring: G-1

Project No: 23394
Date: 08/01/2017
Latitude: 29.96293°
Longitude: -90.13075°

Elevation: 1.3
Datum: NAVD88
Water Depth: See Text
Total Depth: 30.0 ft

Scale in Feet	PP	SPT	SPLR	Symbol	Visual Classification	USC	Sample Number	Depth in Feet	Water Content %	Density Dry pcf	Density Wet pcf	Shear Tests Type	Shear Tests ϕ	Shear Tests C psf	Atterberg Limits LL	Atterberg Limits PL	Atterberg Limits PI		Other Tests
25					shell fragments		6A	25											
					No recovery														
					Gray fine sand	SP	6B	26	23										
							6C	27	22										
					w/trace of clay pockets		6D	28	23										
30					Gray clayey sand	SC	6E	29	29										-#200 = 18.0%
35																			
40																			
45																			
50																			

EUSTIS GINT LIBRARY012017.GLB EE STANDARD BORING LOG 23394.GPJ 4/9/18

NOTES: Elevation is estimated from available data.

EUSTIS ENGINEERING SINCE 1946

Sewerage & Water Board of New Orleans
Carrollton Water Plant Demolition of Two Abandoned Clarifiers

New Orleans, Louisiana

LOG OF BORING AND TEST RESULTS

Boring: G-2

Project No: 23394
Date: 08/01/2017
Latitude: 29.96252°
Longitude: -90.13018°

Elevation: -0.3
Datum: NAVD88
Water Depth: See Text
Total Depth: 30.0 ft

Scale in Feet	PP	SPT	S P L R	Symbol	Visual Classification	USC	Sample Number	Depth in Feet	Water Content %	Density Dry pcf	Density Wet pcf	Shear Tests Type	Shear Tests ϕ	Shear Tests C psf	Atterberg Limits LL	Atterberg Limits PL	Atterberg Limits PI		Other Tests
0					No recovery		1A	0											
					Gray & tan clay w/few silt pockets, trace of roots, & gravel (fill)	CH	1B	0.5	24										
					w/gravel & roots		1C	1	29										
					Gray & tan clay w/silt pockets	CH	1D	2	41										
							1E	3	48										
					w/roots		1F	4	56										
5					w/trace of fine sand pockets		2A	5	60										
					w/trace of sand pockets		2B	6	70										
					w/trace of decayed wood & organic matter		2C	7	89										
					w/trace of wood		2D	8	82						132	39	93		
					w/wood present		2E	9	101										
10					w/trace of silt pockets, decayed wood, & concretions		3A	10	61										
					w/some wood present		3B	11	93						153	33	120		
					Gray organic clay w/several pieces of wood	OH	3C	12	240										ORG = 37.1%
					possible peat		3D	13	222										
					Brown humus w/trace of organic clay	Pt	3E	14	258										
15					Gray clay w/wood & few silt pockets	CH	4A	15	155										
					w/trace of fine sand pockets & organics present		4B	16	66										
					w/some silty sand pockets, trace of roots, & wood		4C	17	47										
							4D	18	53										
							4E	19	61										
20					Tan fine sand (sample was stuck in sampler)	SP	PB-5	20	18										
25																			

EUSTIS GINT LIBRARY012017.GLB EE STANDARD BORING LOG 23394.GPJ 4/9/18

NOTES: Elevation is estimated from available data.

EUSTIS ENGINEERING SINCE 1946

Sewerage & Water Board of New Orleans
Carrollton Water Plant Demolition of Two Abandoned Clarifiers

New Orleans, Louisiana

LOG OF BORING AND TEST RESULTS

Boring: G-2

Project No: 23394
Date: 08/01/2017
Latitude: 29.96252°
Longitude: -90.13018°

Elevation: -0.3
Datum: NAVD88
Water Depth: See Text
Total Depth: 30.0 ft

Scale in Feet	PP	SPT	SPLR	Symbol	Visual Classification	USC	Sample Number	Depth in Feet	Water Content %	Density Dry pcf	Density Wet pcf	Shear Tests Type	Shear Tests ϕ	Shear Tests C psf	Atterberg Limits LL	Atterberg Limits PL	Atterberg Limits PI		Other Tests
25					Tan silty sand w/few clay pockets, trace of shell fragments, & organic matter (sample was stuck in sampler)	SM	PB-6	25	22										-#200 = 26.0%, SV
30																			
35																			
40																			
45																			
50																			

EUSTIS GINT LIBRARY012017.GLB EE STANDARD BORING LOG 23394.GPJ 4/9/18

NOTES: Elevation is estimated from available data.

EUSTIS ENGINEERING SINCE 1946

LOG OF BORING AND TEST RESULTS

Sewerage & Water Board of New Orleans
Carrollton Water Plant Demolition of Two Abandoned Clarifiers

New Orleans, Louisiana

Boring: G-3

Project No: 23394
Date: 08/02/2017
Latitude: 29.96198°
Longitude: -90.12973°

Elevation: 11.6
Datum: NAVD88
Water Depth: See Text
Total Depth: 40.0 ft

Scale in Feet	PP	SPT	S P L R	Symbol	Visual Classification	USC	Sample Number	Depth in Feet	Water Content %	Density Dry pcf	Density Wet pcf	Shear Tests Type	Shear Tests ϕ	Shear Tests C psf	Atterberg Limits LL	Atterberg Limits PL	Atterberg Limits PI		Other Tests
0					Brown silty clay w/gravel, trace of roots, & shell fragments (fill)	CL	1A	0											
					Gray clay w/silt pockets, gravel, shell fragments & roots (fill)	CH	1B	1	6										
					w/few silt pockets		1C	2	15										
					w/trace of gravel		1D	3	29										
					w/shell fragments & brown clay (possible fill)	CH	1E	4	35										
5					Gray clay w/few silt pockets & shell fragments (possible fill)		2A	5											
					No recovery		2B	6											
					Gray clay w/few silt pockets, trace of shell fragments, & decayed wood (possible fill)	CH	2C	7	56										
					Soft gray clay w/few silt pockets & trace of shell fragments (possible fill), possible ground surface prior to fill placement	CH	2D	8	49										
							2E	9	50										
10					Gray clay w/few silt pockets	CH	3A	10	44										
							3B	11	51										
							3C	12	50										
							3D	13	52										
					w/some fragments & traces of wood		3E	14	58										
15					No recovery		4A	15											
							4B	16											
					Gray clay w/few silt pockets	CH	4C	17.5	71										
					w/wood & organic matter	OH	4D	18	116						143	38	105		
					Brown & gray organic clay w/silt pockets & wood		4E	19	189										
20					very soft w/trace of organic matter w/wood		5A	20											
					No recovery		5B	21											
					Brown, dark gray, & gray organic clay w/wood & organics	OH	5C	22	173										ORG = 35.1%
					w/humus		5D	23	167										
					Gray clay w/silty sand & fine sand pockets & layers, & tr of org matter	CH	5E	24	68										
25																			

EUSTIS GINT LIBRARY012017.GLB EE STANDARD BORING LOG 23394.GPJ 4/9/18

NOTES: Elevation is estimated from available data.

EUSTIS ENGINEERING SINCE 1946

Sewerage & Water Board of New Orleans
Carrollton Water Plant Demolition of Two Abandoned Clarifiers

New Orleans, Louisiana

LOG OF BORING AND TEST RESULTS

Boring: G-3

Project No: 23394
Date: 08/02/2017
Latitude: 29.96198°
Longitude: -90.12973°

Elevation: 11.6
Datum: NAVD88
Water Depth: See Text
Total Depth: 40.0 ft

Scale in Feet	PP	SPT	S P L R	Symbol	Visual Classification	USC	Sample Number	Depth in Feet	Water Content %	Density Dry pcf	Density Wet pcf	Shear Tests Type	Shear Tests ϕ	Shear Tests C psf	Atterberg Limits LL	Atterberg Limits PL	Atterberg Limits PI	Other Tests
25					Gray clay w/silty sand & fine sand pockets & layers, & trace of organic matter	CH	6A	25	38									-#200 = 86.5%
					w/clay & silty sand pockets		6B	26	43									
					Appears very soft		6C	27	49						61	21	40	
							6D	28	49									
							6E	29	46									
30					Gray fine sand w/trace of clay	SP	7A	30	7									
							7B	31	10									
							7C	32	10									
					w/trace of silt & shell fragments		7D	33	21									-#200 = 3.0%, SV
					w/few clay pockets		7E	34	25									
35							8A	35	23									
					Gray clayey sand w/fine sand pockets & trace of shell fragments	SC	8B	36	34									-#200 = 44.3%
					w/clay & sand layers	CH	8C	37	43									
					Gray clay w/fine sand pockets													
					Gray clayey sand w/trace of shell fragments	SC	8D	38	32									-#200 = 33.1%
					Gray clay w/some fine sand pockets	CH	8E	39	53									
40																		
45																		
50																		

EUSTIS GINT LIBRARY012017.GLB EE STANDARD BORING LOG 23394.GPJ 4/9/18

NOTES: Elevation is estimated from available data.

EUSTIS ENGINEERING SINCE 1946

LOG OF BORING AND TEST RESULTS

Sewerage & Water Board of New Orleans
Carrollton Water Plant Demolition of Two Abandoned Clarifiers

New Orleans, Louisiana

Boring: G-4

Project No: 23394
Date: 08/01/2017
Latitude: 29.96220°
Longitude: -90.12945°

Elevation: -0.2
Datum: NAVD88
Water Depth: See Text
Total Depth: 30.0 ft

Scale in Feet	PP	SPT	S P L R	Symbol	Visual Classification	USC	Sample Number	Depth in Feet	Water Content %	Density Dry pcf	Density Wet pcf	Shear Tests Type	Shear Tests ϕ	Shear Tests C psf	Atterberg Limits LL	Atterberg Limits PL	Atterberg Limits PI		Other Tests
0					Gray & tan silty clay w/gravel & shell fragments (fill)	CL	1A	0	22										
							1B	1	29										
					Gray & tan clay w/silt pockets & gravel (possible fill)	CH	1C	2	51										
							1D	3	52										
							1E	4	53										
5					Gray clay w/silt pockets	CH	2A	5	62										
							2B	6	75										
					w/trace of decayed wood sample saturated w/traces of wood		2C	7	99						132	33	99		
							2D	8	98						127	25	102		
					w/traces of wood present		2E	9	93										
10							3A	10	69										
							3B	11	75										
							3C	12	86										
							3D	13	94										
					Gray organic clay w/some organic matter & few wood	OH	3E	14	189										ORG = 22.0%
15					No recovery		4A	15											
					Gray clay w/trace of organic matter & wood	CH	4B	16	98										
					w/some silty sand pockets		4C	17	47										
							4D	18	50										
					w/few silt pockets (very small sand pockets & layers		4E	19	52										
20					w/trace of wood		5A	20	62										
							5B	21	52										
					Gray fine sand w/clay layers	SP	5C	22	18										
					w/trace of shell fragments & silt		5D	23	19										-#200 = 0.2%, SV
							5E	24	22										
25																			

EUSTIS GINT LIBRARY012017.GLB EE STANDARD BORING LOG 23394.GPJ 4/9/18

NOTES: Elevation is estimated from available data.

EUSTIS ENGINEERING SINCE 1946

Sewerage & Water Board of New Orleans
Carrollton Water Plant Demolition of Two Abandoned Clarifiers

New Orleans, Louisiana

LOG OF BORING AND TEST RESULTS

Boring: G-4

Project No: 23394
Date: 08/01/2017
Latitude: 29.96220°
Longitude: -90.12945°

Elevation: -0.2
Datum: NAVD88
Water Depth: See Text
Total Depth: 30.0 ft

Scale in Feet	PP	SPT	S P L R	Symbol	Visual Classification	USC	Sample Number	Depth in Feet	Water Content %	Density Dry pcf	Density Wet pcf	Shear Tests Type	Shear Tests ϕ	Shear Tests C psf	Atterberg Limits LL	Atterberg Limits PL	Atterberg Limits PI		Other Tests
25					Gray fine sand w/clay layers w/trace of decayed wood	SP	6A	25	25										
							6B	26	22										
							6C	27	22										
					Gray clayey sand w/trace of shell fragments	SC	6D	28	30										-#200 = 24.8%
					Gray sandy clay	CL	6E	29	43										
30																			
35																			
40																			
45																			
50																			

EUSTIS GINT LIBRARY012017.GLB EE STANDARD BORING LOG 23394.GPJ 4/9/18

NOTES: Elevation is estimated from available data.

EUSTIS ENGINEERING SINCE 1946

Sewerage & Water Board of New Orleans
Carrollton Water Plant Demolition of Two Abandoned Clarifiers

New Orleans, Louisiana

LOG OF BORING AND TEST RESULTS

Boring: G-5

Project No: 23394
Date: 08/02/2017
Latitude: 29.96193°
Longitude: -90.12958°

Elevation: 1.1
Datum: NAVD88
Water Depth: See Text
Total Depth: 25.0 ft

Scale in Feet	PP	SPT	SPLR	Symbol	Visual Classification	USC	Sample Number	Depth in Feet	Water Content %	Density Dry pcf	Density Wet pcf	Shear Tests Type	Shear Tests ϕ	Shear Tests C psf	Atterberg Limits LL	Atterberg Limits PL	Atterberg Limits PI		Other Tests
0					Gray & brown clay w/some silt pockets, few shell fragments, & roots (fill)	CH	1A	0	40										
							1B	1	23										
							1C	2	37										
					Gray & tan clay w/few silt pockets, decayed wood, & trace of shell fragments	CH	1D	3	46										
							1E	4	54										
5							2A	5	49										
							2B	6	51						103	27	76		
							2C	7	56										
					w/trace of wood		2D	8	71										
							2E	9	75										
10					No recovery		3A	10											
					Gray clay w/silt pockets & decayed wood	CH	3B	11	57										
							3C	12	97										
					w/organics		3D	13	171										ORG = 23.8%
							3E	14	150										
15					No recovery		4A	15											
					Gray clay w/silt pockets & trace of organic matter	CH	4B	16	60						87	27	60		
					Dark brown humus	Pt	4C	17.5	117										
					Gray clay w/humus/peat layers	CH	4D	18	290										ORG = 33.1%
					w/small sand layers present		4E	19	55										
20					w/few silt pockets present		5A	20	46										
							5B	21	49										
							5C	22	48										
							5D	23	45										
					Gray fine sand w/shell fragments & trace of clay pockets, & silt	SP	5E	24	19										-#20 = 2.6%, SV
25																			

EUSTIS GINT LIBRARY012017.GLB EE STANDARD BORING LOG 23394.GPJ 4/9/18

NOTES: Elevation is estimated from available data.

EUSTIS ENGINEERING SINCE 1946

LOG OF BORING AND TEST RESULTS

Sewerage & Water Board of New Orleans
Carrollton Water Plant Demolition of Two Abandoned Clarifiers

New Orleans, Louisiana

Boring: G-6

Project No: 23394
Date: 08/01/2017
Latitude: 29.96225°
Longitude: -90.12902°

Elevation: -0.7
Datum: NAVD88
Water Depth: See Text
Total Depth: 25.0 ft

Scale in Feet	PP	SPT	S P L R	Symbol	Visual Classification	USC	Sample Number	Depth in Feet	Water Content %	Density Dry pcf	Density Wet pcf	Shear Tests Type	Shear Tests ϕ	Shear Tests C psf	Atterberg Limits LL	Atterberg Limits PL	Atterberg Limits PI		Other Tests
0					Gray & brown silty clay w/few fine sand pockets, roots, & shell fragments (fill)	CL	1A	0	13										
					Gray & tan clay w/few silt pockets, trace of decayed wood, & gravel (fill)	CH	1B	1	34										
					Gray clay w/few silt pockets, shell fragments, & concretions (possible fill)	CH	1C	2	36										
					Gray clay w/silt pockets, layers, & decayed wood	CH	1D	3	45										
					w/straight wood piece from 4' - 4.5'		1E	4	57										
5					Wood	Wd	2A	5	305										
							2B	6											
					Gray clay w/decayed wood	CH	2C	7	113						147	41	106		
							2D	8	123										
					Gray & brown organic clay w/clay pockets & lenses, silt pockets, decayed wood, & roots	OH	2E	9	165										ORG = 19.1%
10					No recovery		3A	10											
					w/very soft clay		3B	11	155						157	51	106		
					w/decayed wood, organic matter		3C	12	233										
							3D	13	160										
					Dark brown humus w/clay layers	Pt	3E	14	334										ORG = 47.2%
15					No recovery		4A	15											
					Gray clay w/trace of silt pockets	CH	4B	16	62						62	16	46		
					very soft		4C	17	43										-#200 = 82.3%
					w/silty sand pockets, trace of roots, decayed wood, & organic matter		4D	18	40										
					w/sand layers		4E	19	58										
20					Gray fine sand	SP	5A	20	19										
					w/trace of shell fragments & silt		5B	21	20										-#200 = 1.2%, SV
					w/trace of clay pockets		5C	22	22										
					Gray clay w/silt pockets	CH	5D	23	50										
					w/some sand layers		5E	24	67										
25					w/organic matter														

EUSTIS GINT LIBRARY012017.GLB EE STANDARD BORING LOG 23394.GPJ 4/9/18

NOTES: Elevation is estimated from available data.

EUSTIS ENGINEERING SINCE 1946

LOG OF BORING AND TEST RESULTS

Sewerage & Water Board of New Orleans
Carrollton Water Plant Demolition of Two Abandoned Clarifiers

New Orleans, Louisiana

Boring: G-7

Project No: 23394
Date: 08/02/2017
Latitude: 29.96168°
Longitude: -90.12928°

Elevation: 0.2
Datum: NAVD88
Water Depth: See Text
Total Depth: 30.0 ft

Scale in Feet	PP	SPT	S P L R	Symbol	Visual Classification	USC	Sample Number	Depth in Feet	Water Content %	Density Dry pcf	Density Wet pcf	Shear Tests Type	Shear Tests ϕ	Shear Tests C psf	Atterberg Limits LL	Atterberg Limits PL	Atterberg Limits PI		Other Tests
0					No recovery		1A	0											
					Gray silty clay w/trace of gravel, roots, & shell fragments (fill)	CL	1B	1	28										
					Gray clay w/silty sand pockets & trace of shell fragments	CH	1C	2	31										
					soft		1D	3	54						66	19	47		
					Gray clayey sand w/shell fragments	SC	1E	4	30										-#200 = 36.3%
5					No recovery		2A	5											
					Gray clay w/organic matter very wet	CH	2B	6	67						57	21	36		
					Gray silty sand w/clay pockets, trace of shell fragments, & organic matter	SM	2C	7	23										
							2D	8	26										-#200 = 24.3%
							2E	9	52										
10					No recovery		3A	10											
					Gray clay w/few silty sand pockets	CH	3B	11	47										
					Gray clayey sand w/humus layers, few organic matter, shell fragments, & decayed wood	SC	3C	12	40										-#200 = 23.0%
					Brown & gray organic clay w/wood	OH	3D	13	192										ORG = 21.0%
					Dark brown humus w/clay pockets	Pt	3E	14	336										
15					No recovery		4A	15											
					very soft brick fragments could have entered through open bore hole	CH	4B	16	81										
							4C	17	123										
							4D	18	53										
							4E	19	43						52	16	36		
20					w/few silt pockets w/trace of organics		5A	20	57										
							5B	21	56										
					Gray clayey silt w/few fine sand pockets & trace of roots	ML	5C	22	48										-#200 = 96.0%, PD
					Gray fine sand w/few clay & silt pockets	SP	5D	23	21										
25							5E	24	22										

EUSTIS GINT LIBRARY\012017.GLB EE STANDARD BORING LOG 23394.GPJ 4/9/18

NOTES: Elevation is estimated from available data.

EUSTIS ENGINEERING SINCE 1946

Sewerage & Water Board of New Orleans
Carrollton Water Plant Demolition of Two Abandoned Clarifiers

New Orleans, Louisiana

LOG OF BORING AND TEST RESULTS

Boring: G-7

Project No: 23394
Date: 08/02/2017
Latitude: 29.96168°
Longitude: -90.12928°

Elevation: 0.2
Datum: NAVD88
Water Depth: See Text
Total Depth: 30.0 ft

Scale in Feet	PP	SPT	SPLR	Symbol	Visual Classification	USC	Sample Number	Depth in Feet	Water Content %	Density Dry pcf	Density Wet pcf	Shear Tests Type	Shear Tests ϕ	Shear Tests C psf	Atterberg Limits LL	Atterberg Limits PL	Atterberg Limits PI		Other Tests
25					Gray clay w/silt pockets, trace of shell fragments, & roots	CH	6A	25	52										
					very soft		6B	26	30										
					Gray sandy clay w/sand layers	CL	6C	27	18										
					Gray fine sand	SP	6D	28	17										
					w/trace of clay pockets		6E	29	22										
30																			
35																			
40																			
45																			
50																			

EUSTIS GINT LIBRARY012017.GLB EE STANDARD BORING LOG 23394.GPJ 4/9/18

NOTES: Elevation is estimated from available data.

Particle Size Distribution Report

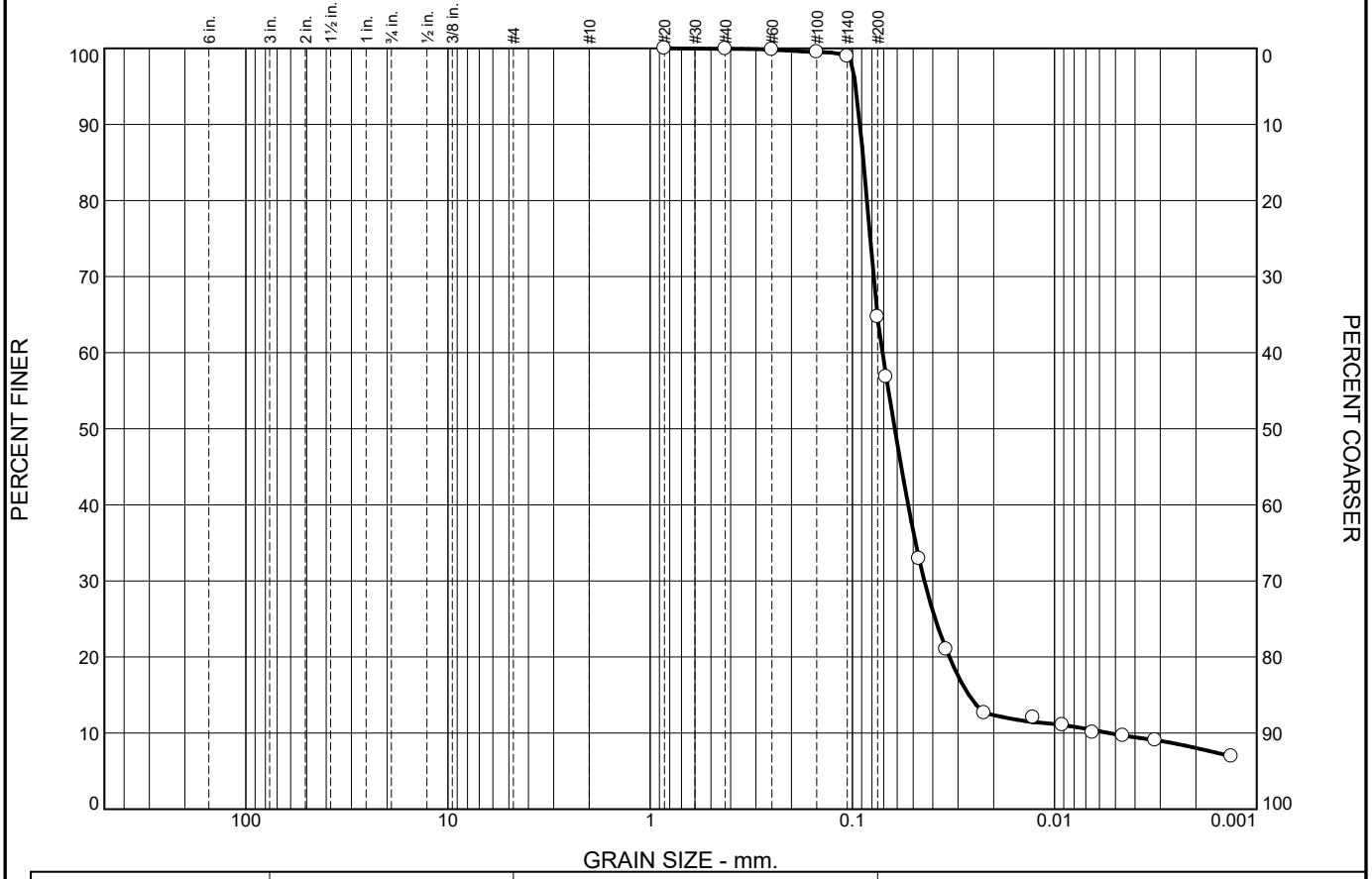

	% +3"	% Gravel		% Sand			% Fines	
		Coarse	Fine	Coarse	Medium	Fine	Silt	Clay
○	0.0	0.0	0.0	0.0	0.1	35.2	54.9	9.8

	LL	PL	D_{85}	D_{60}	D_{50}	D_{30}	D_{15}	D_{10}	C_c	C_u
○			0.0879	0.0711	0.0617	0.0440	0.0265	0.0054	5.07	13.22

Material Description	USCS	AASHTO
○ Gray Sandy Silt W/ Clay	ML	

Project No. 23394 **Client:** SEWERAGE & WATER BOARD OF NEW ORLEANS, NEW

Project: SEWERAGE & WATER BOARD OF NEW ORLEANS

CARROLLTON WATER PLANT DEMOLITION OF TWO ABANDONED CLARIFIERS, NEW

○ **Source of Sample:** G-1 **Depth:** 20 **Sample Number:** 5A

Remarks:

○Specific Gravity was Estimated

EUSTIS ENGINEERING SINCE 1946

Figure

Tested By: BH & CC **Checked By:** CD

Particle Size Distribution Report

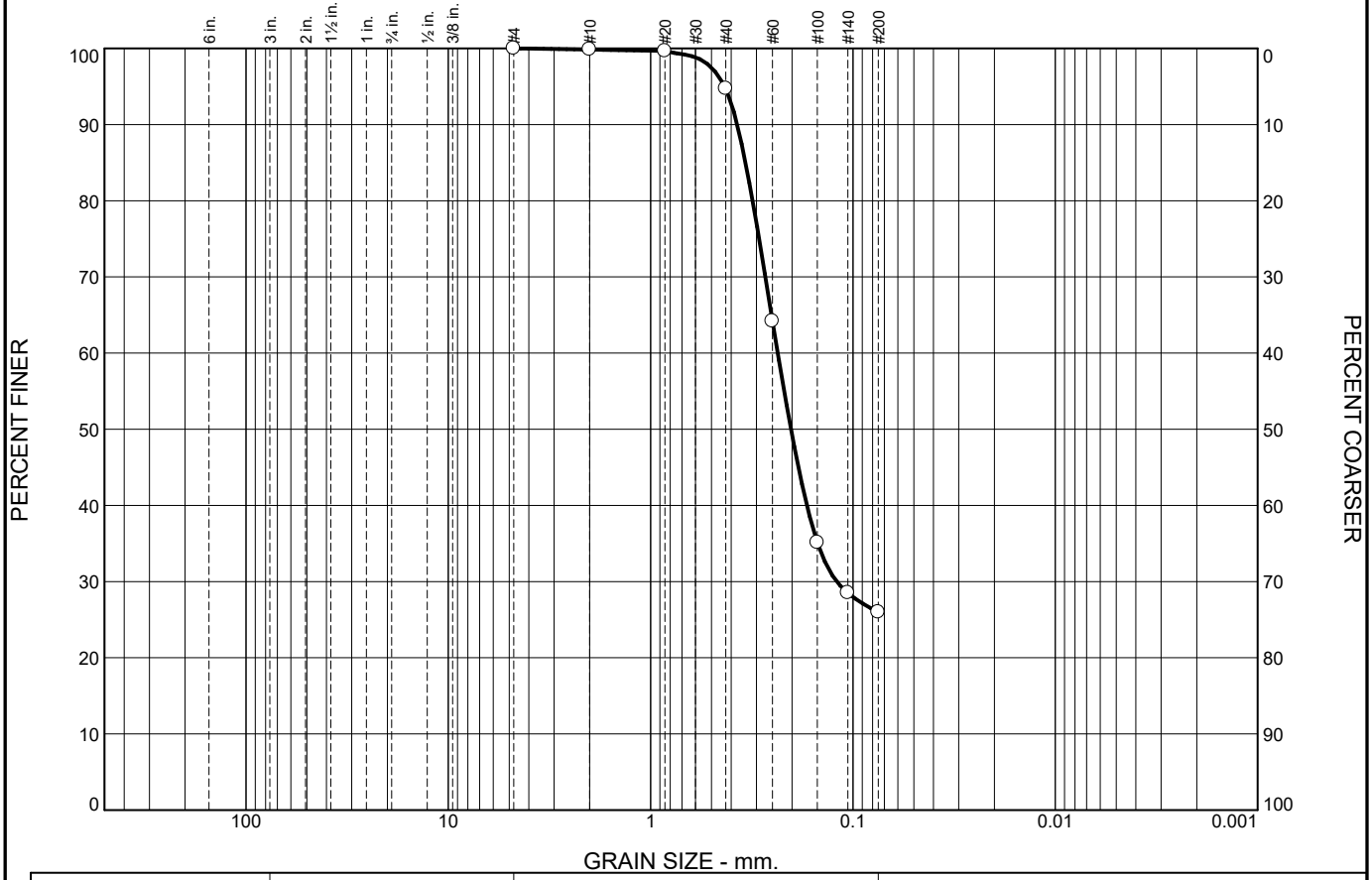

	% +3"	% Gravel		% Sand			% Fines	
		Coarse	Fine	Coarse	Medium	Fine	Silt	Clay
○	0.0	0.0	0.0	0.2	5.1	68.7	26.0	

	LL	PL	D_{85}	D_{60}	D_{50}	D_{30}	D_{15}	D_{10}	C_c	C_u
○			0.3395	0.2355	0.2025	0.1203				

Material Description	USCS	AASHTO
○ Tan Silty Sand W/ Few Clay Pockets, Traces Shell Fragments and Organic Matter	SM	

Project No. 23394 **Client:** SEWERAGE & WATER BOARD OF NEW ORLEANS, NEW

Project: SEWERAGE & WATER BOARD OF NEW ORLEANS

CARROLLTON WATER PLANT DEMOLITION OF TWO ABANDONED CLARIFIERS, NEW

○ **Source of Sample:** G-2 **Depth:** 25 **Sample Number:** PB-6

Remarks:

EUSTIS ENGINEERING SINCE 1946

Figure

Tested By: BH **Checked By:** CD

Particle Size Distribution Report

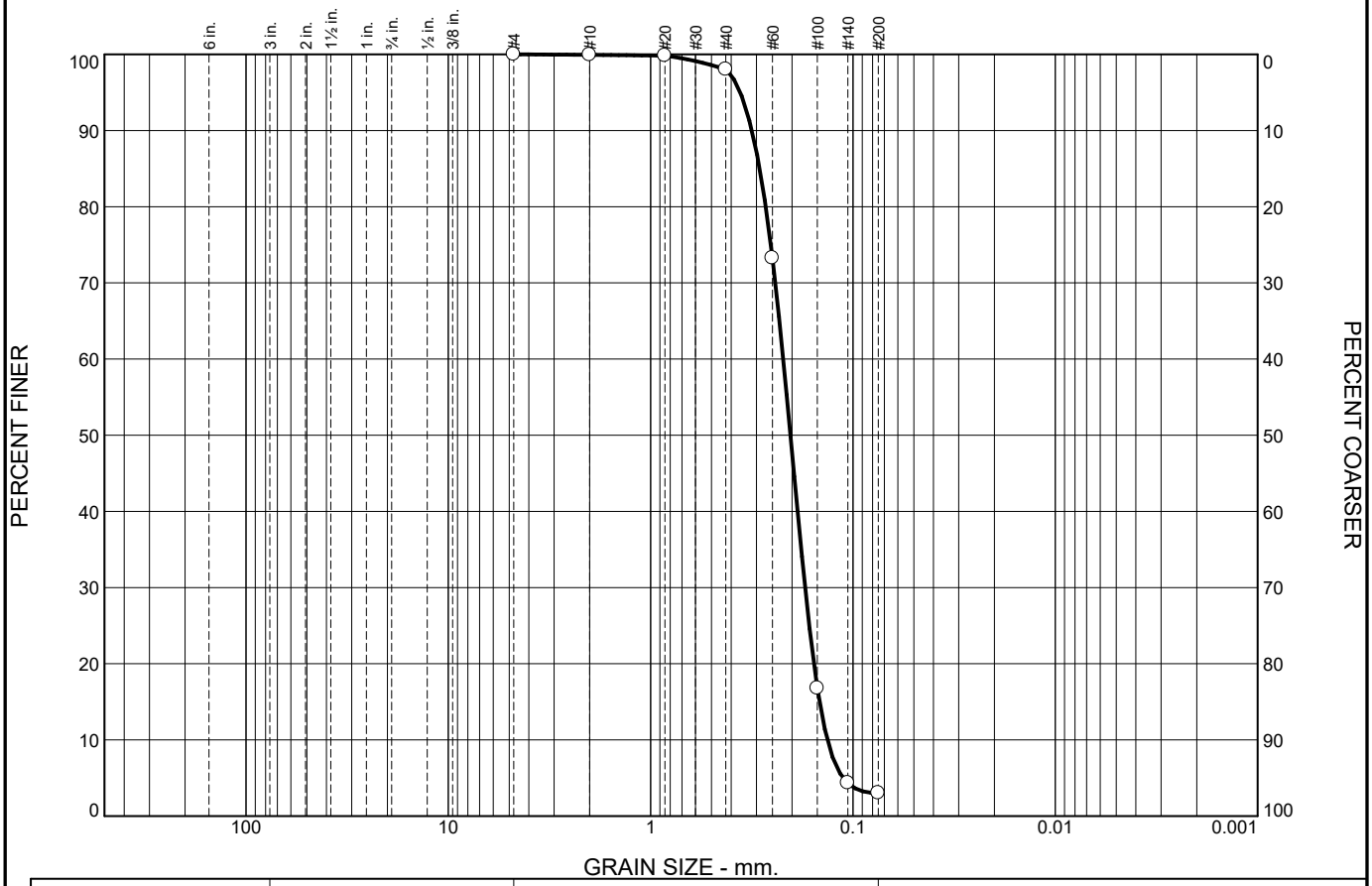

	% +3"	% Gravel		% Sand			% Fines	
		Coarse	Fine	Coarse	Medium	Fine	Silt	Clay
○	0.0	0.0	0.0	0.1	1.9	95.0	3.0	

	LL	PL	D_{85}	D_{60}	D_{50}	D_{30}	D_{15}	D_{10}	C_c	C_u
○			0.2892	0.2213	0.2038	0.1724	0.1464	0.1339	1.00	1.65

Material Description	USCS	AASHTO
○ Gray Fine Sand W/ Traces of Silt and Shell Fragments	SP	

Project No. 23394 **Client:** SEWERAGE & WATER BOARD OF NEW ORLEANS, NEW

Project: SEWERAGE & WATER BOARD OF NEW ORLEANS

CARROLLTON WATER PLANT DEMOLITION OF TWO ABANDONED CLARIFIERS, NEW

○ **Source of Sample:** G-3 **Depth:** 33 **Sample Number:** 7D

Remarks:

EUSTIS ENGINEERING SINCE 1946

Figure

Tested By: BH **Checked By:** CD

Particle Size Distribution Report

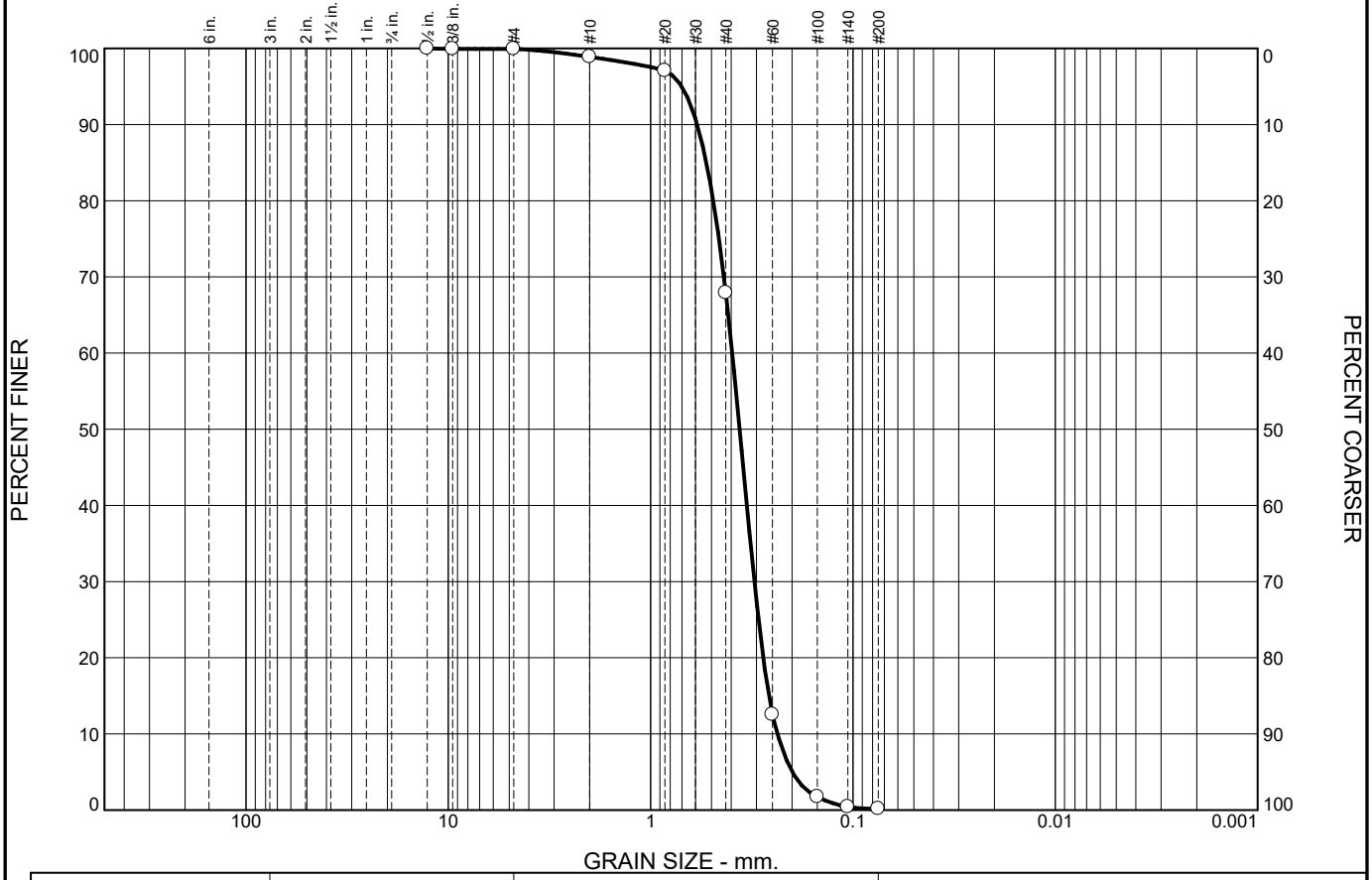

	% +3"	% Gravel		% Sand			% Fines	
		Coarse	Fine	Coarse	Medium	Fine	Silt	Clay
○	0.0	0.0	0.1	1.0	31.0	67.7	0.2	

	LL	PL	D_{85}	D_{60}	D_{50}	D_{30}	D_{15}	D_{10}	C_c	C_u
○			0.5302	0.3950	0.3630	0.3069	0.2606	0.2361	1.01	1.67

Material Description	USCS	AASHTO
○ Gray Medium to Fine Sand W/ Traces of Shell Fragments and Silt	SP	

Project No. 23394 **Client:** SEWERAGE & WATER BOARD OF NEW ORLEANS, NEW

Project: SEWERAGE & WATER BOARD OF NEW ORLEANS

CARROLLTON WATER PLANT DEMOLITION OF TWO ABANDONED CLARIFIERS, NEW

○ **Source of Sample:** G-4 **Depth:** 23 **Sample Number:** 5D

Remarks:

EUSTIS ENGINEERING SINCE 1946

Figure

Tested By: BH **Checked By:** CD

Particle Size Distribution Report

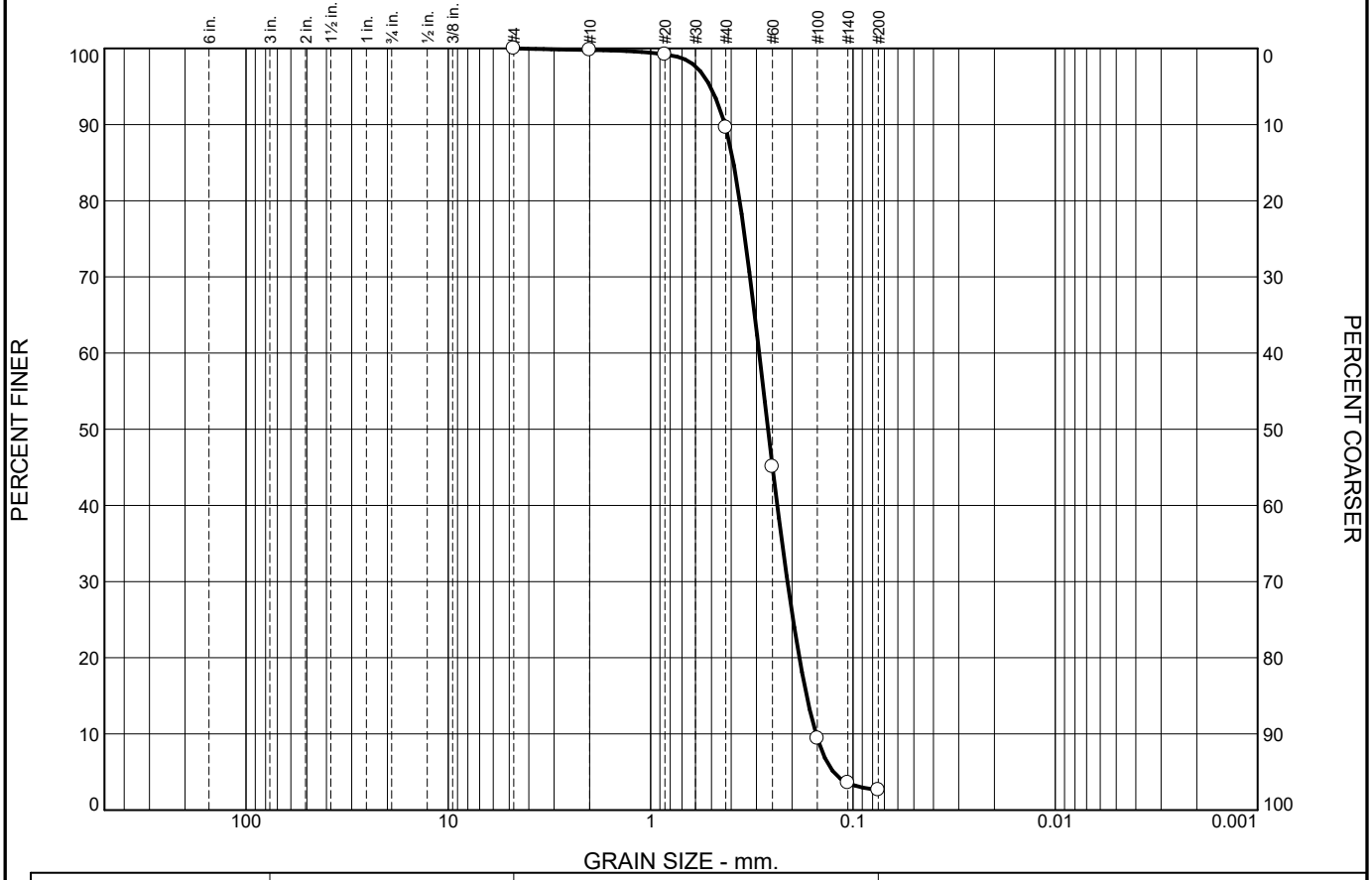

	% +3"	% Gravel		% Sand			% Fines	
		Coarse	Fine	Coarse	Medium	Fine	Silt	Clay
○	0.0	0.0	0.0	0.2	10.2	87.0	2.6	

	LL	PL	D_{85}	D_{60}	D_{50}	D_{30}	D_{15}	D_{10}	C_c	C_u
○			0.3895	0.2909	0.2630	0.2109	0.1694	0.1523	1.00	1.91

Material Description	USCS	AASHTO
○ Gray Fine Sand W/ Shell Fragments, Traces of Clay Pockets and Silt	SP	

Project No. 23394 **Client:** SEWERAGE & WATER BOARD OF NEW ORLEANS, NEW

Project: SEWERAGE & WATER BOARD OF NEW ORLEANS

CARROLLTON WATER PLANT DEMOLITION OF TWO ABANDONED CLARIFIERS, NEW

○ **Source of Sample:** G-5 **Depth:** 24 **Sample Number:** 5E

Remarks:

EUSTIS ENGINEERING SINCE 1946

Figure

Tested By: BH **Checked By:** CD

Particle Size Distribution Report

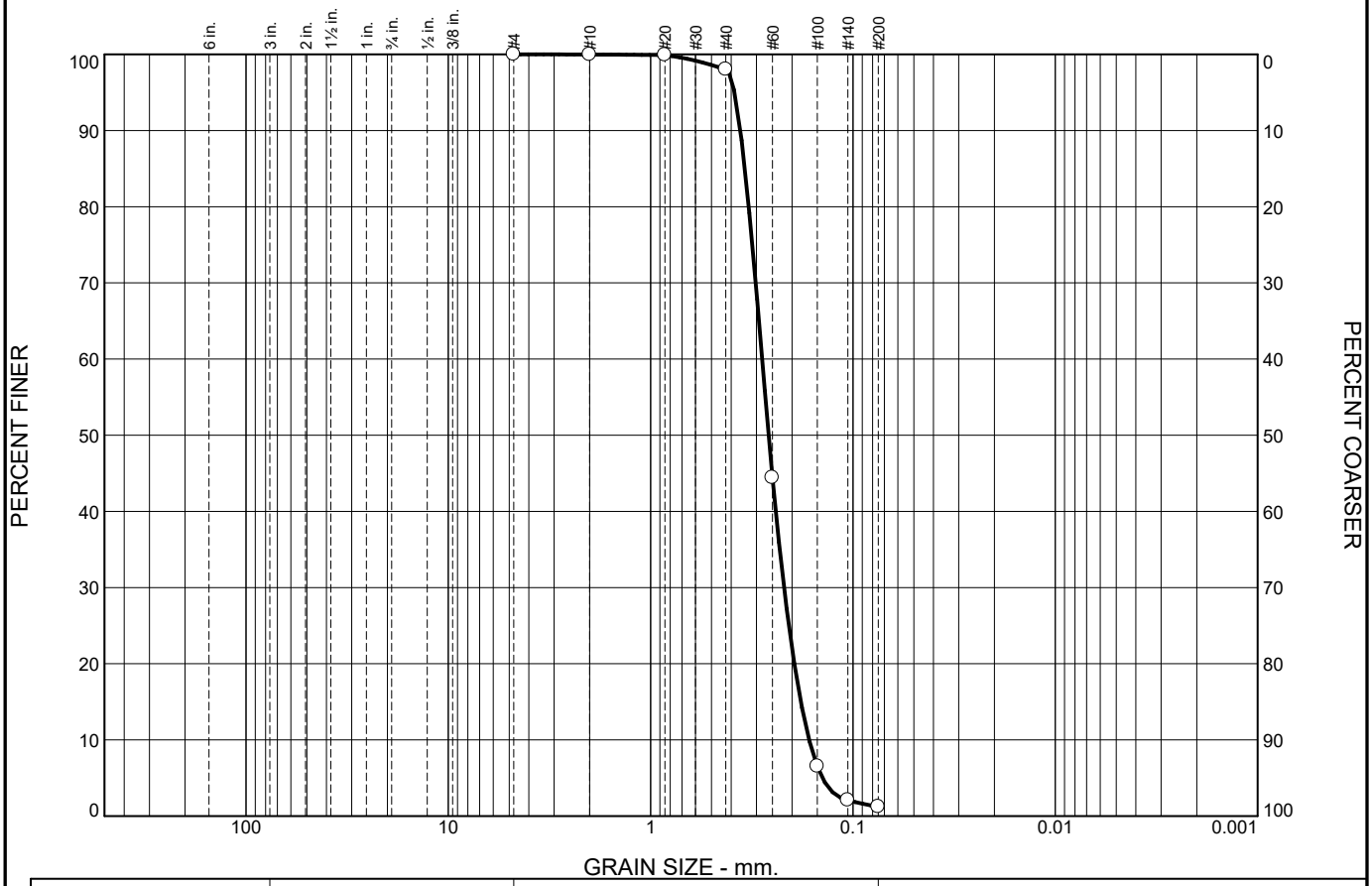

	% +3"	% Gravel		% Sand			% Fines	
		Coarse	Fine	Coarse	Medium	Fine	Silt	Clay
○	0.0	0.0	0.0	0.0	2.0	96.8	1.2	

	LL	PL	D_{85}	D_{60}	D_{50}	D_{30}	D_{15}	D_{10}	C_c	C_u
○			0.3420	0.2812	0.2611	0.2192	0.1810	0.1646	1.04	1.71

Material Description	USCS	AASHTO
○ Gray Fine Sand W/ Trace of Shell Fragments and Silt	SP	

Project No. 23394 **Client:** SEWERAGE & WATER BOARD OF NEW ORLEANS, NEW

Project: SEWERAGE & WATER BOARD OF NEW ORLEANS

CARROLLTON WATER PLANT DEMOLITION OF TWO ABANDONED CLARIFIERS, NEW

○ **Source of Sample:** G-6 **Depth:** 21 **Sample Number:** 5B

Remarks:

EUSTIS ENGINEERING SINCE 1946

Figure

Tested By: BH **Checked By:** CD

Particle Size Distribution Report

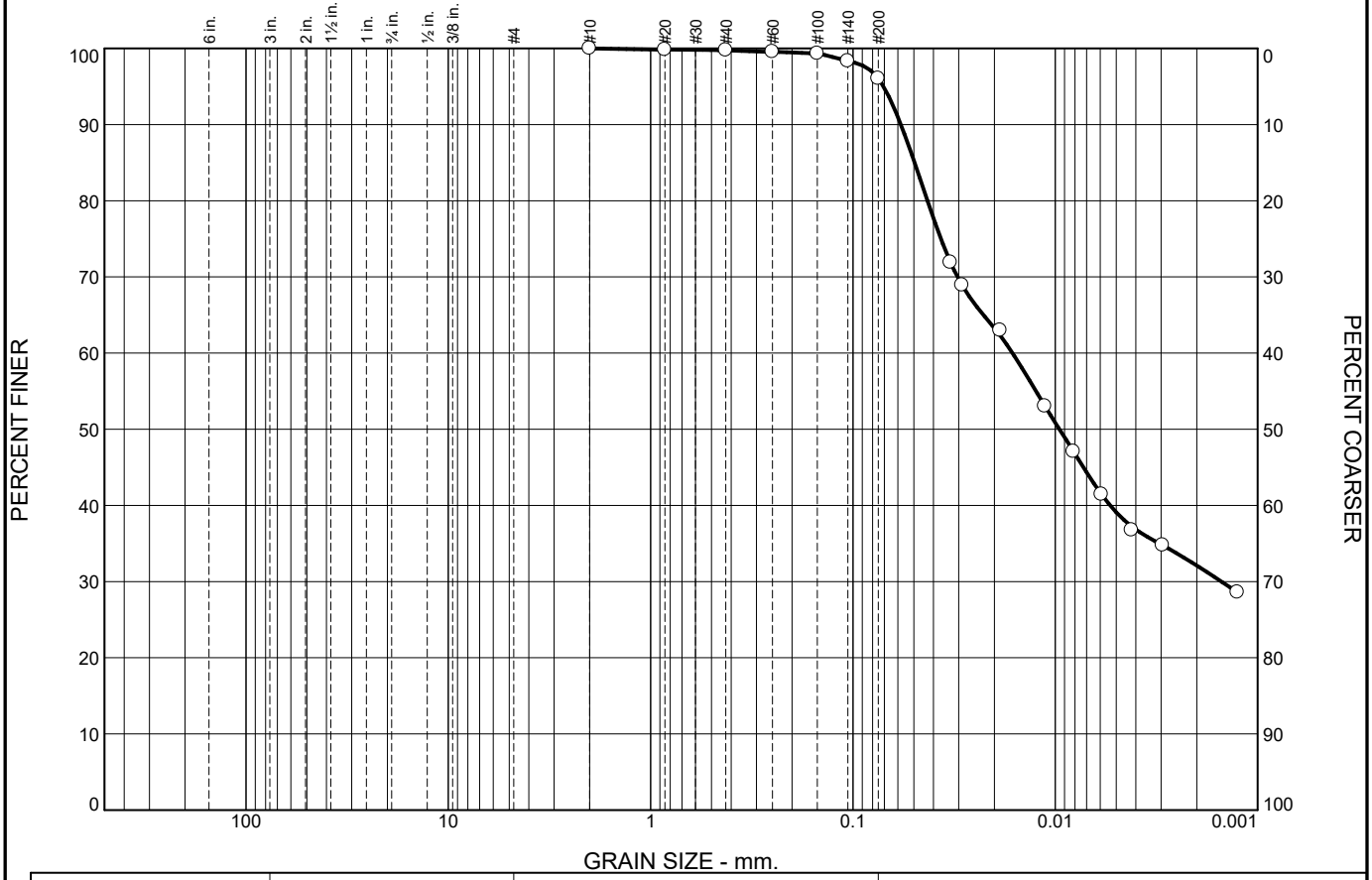

	% +3"	% Gravel		% Sand			% Fines	
		Coarse	Fine	Coarse	Medium	Fine	Silt	Clay
○	0.0	0.0	0.0	0.0	0.3	3.7	56.9	39.1

	LL	PL	D_{85}	D_{60}	D_{50}	D_{30}	D_{15}	D_{10}	C_c	C_u
○			0.0496	0.0163	0.0095	0.0015				

Material Description	USCS	AASHTO
○ Gray Clayey Silt W/ Few Fine Sand Pockets, Trace of Roots	ML	

Project No. 23394 **Client:** SEWERAGE & WATER BOARD OF NEW ORLEANS, NEW

Project: SEWERAGE & WATER BOARD OF NEW ORLEANS

CARROLLTON WATER PLANT DEMOLITION OF TWO ABANDONED CLARIFIERS, NEW

○ **Source of Sample:** G-7 **Depth:** 22 **Sample Number:** 5C

Remarks:

○Specific Gravity was Estimated

EUSTIS ENGINEERING SINCE 1946

Figure

Tested By: BH & CC **Checked By:** CD

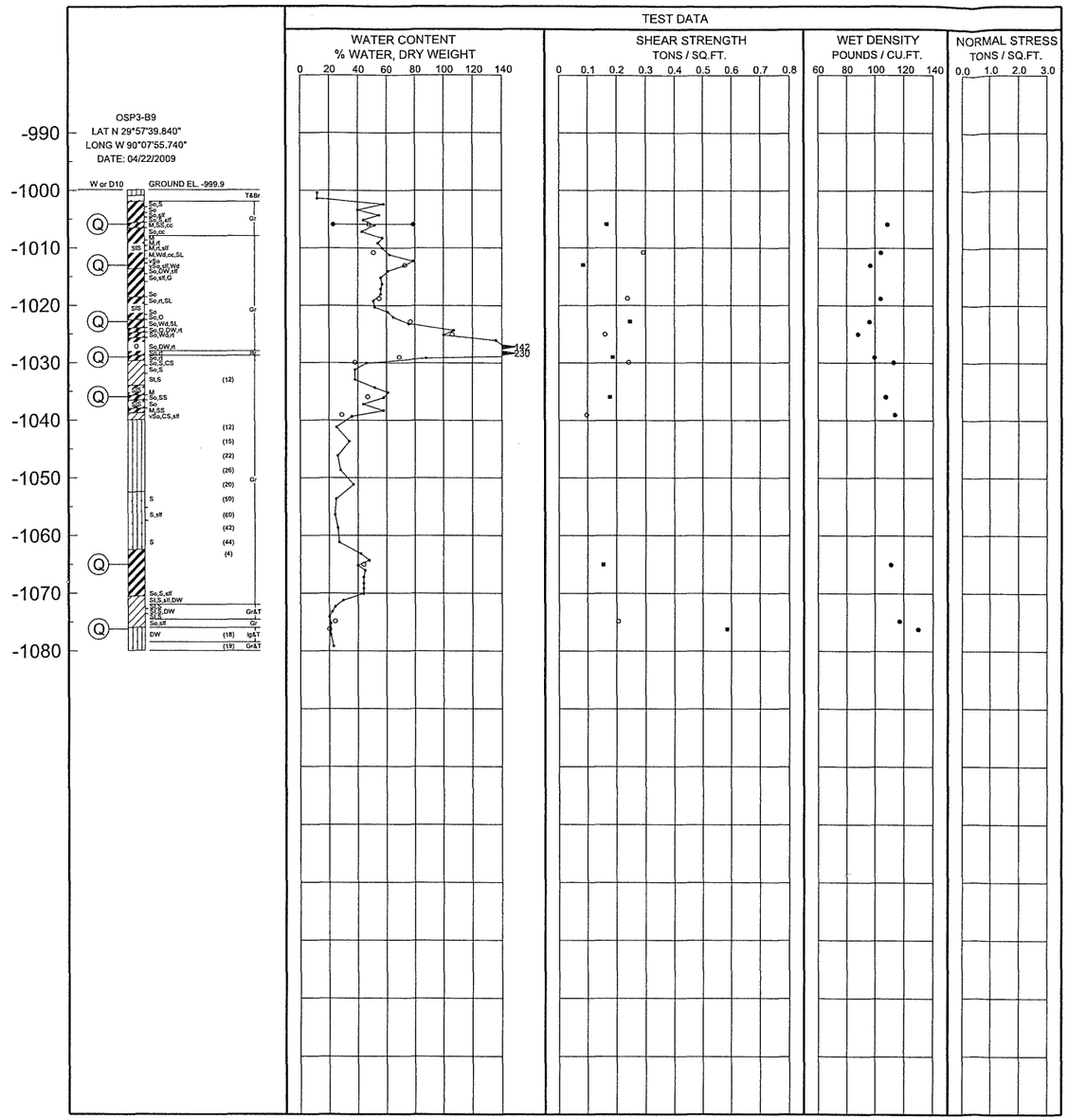

PLASTICITY CHART

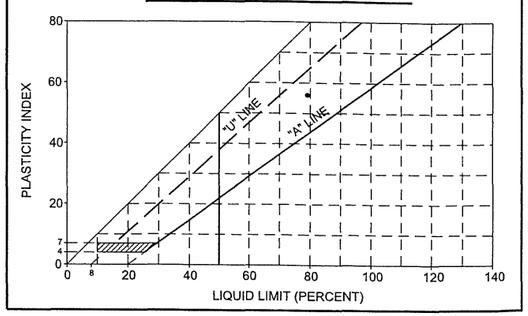

SHEAR STRENGTH DATA

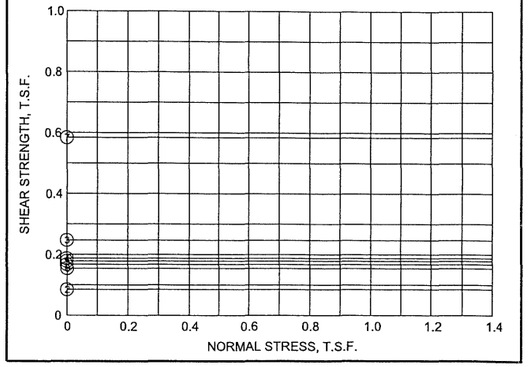

TABULAR TEST DATA

ENVELOPE NO.	ENVELOPE EL.	TYPE	STRENGTH V	STRENGTH C - TSF	CLASS
1	-1005.9	Q	0.0	0.167	CH
2	-1013.0	Q	0.0	0.085	CH
3	-1022.8	Q	0.0	0.247	CH
4	-1029.0	Q	0.0	0.187	CH
5	-1035.9	Q	0.0	0.178	CH
6	-1065.0	Q	0.0	0.154	CH
7	-1076.2	Q	0.0	0.584	SM

NOTES

- ○ - (UC) UNCONFINED COMPRESSION TEST
- ■ - (Q) UNCONSOLIDATED - UNDRAINED TRIAXIAL SHEAR TEST
- ▲ - (R) CONSOLIDATED - UNDRAINED TRIAXIAL SHEAR TEST
- ⊡ - (S) CONSOLIDATED - DRAINED DIRECT SHEAR TEST
- W_P W_N W_L ATTERBERG LIMITS

BORING WAS TAKEN WITH A 5 INCH DIAMETER STEEL TUBE PISTON TYPE SAMPLER.
FOR SOIL BORING LEGEND SEE PLATE A.
FOR LOCATION OF BORINGS SEE PLATE
FOR DETAILED TEST DATA SEE

US ARMY CORPS OF ENGINEERS
NEW ORLEANS DISTRICT

APP'R | DATE | DESCRIPTION | MARK

DESIGNED BY | DATE | SUBSTANTIAL | SCALE
DRAWN BY | CHK BY | CONTRACT NO. | FILE NUMBER
ESTIMATED BY | | | PLOT SCALE
FILE NAME | | | SIZE

U.S. ARMY ENGINEER DISTRICT
CORPS OF ENGINEERS
MISSISSIPPI VALLEY DIVISION

SHEET IDENTIFICATION NUMBER

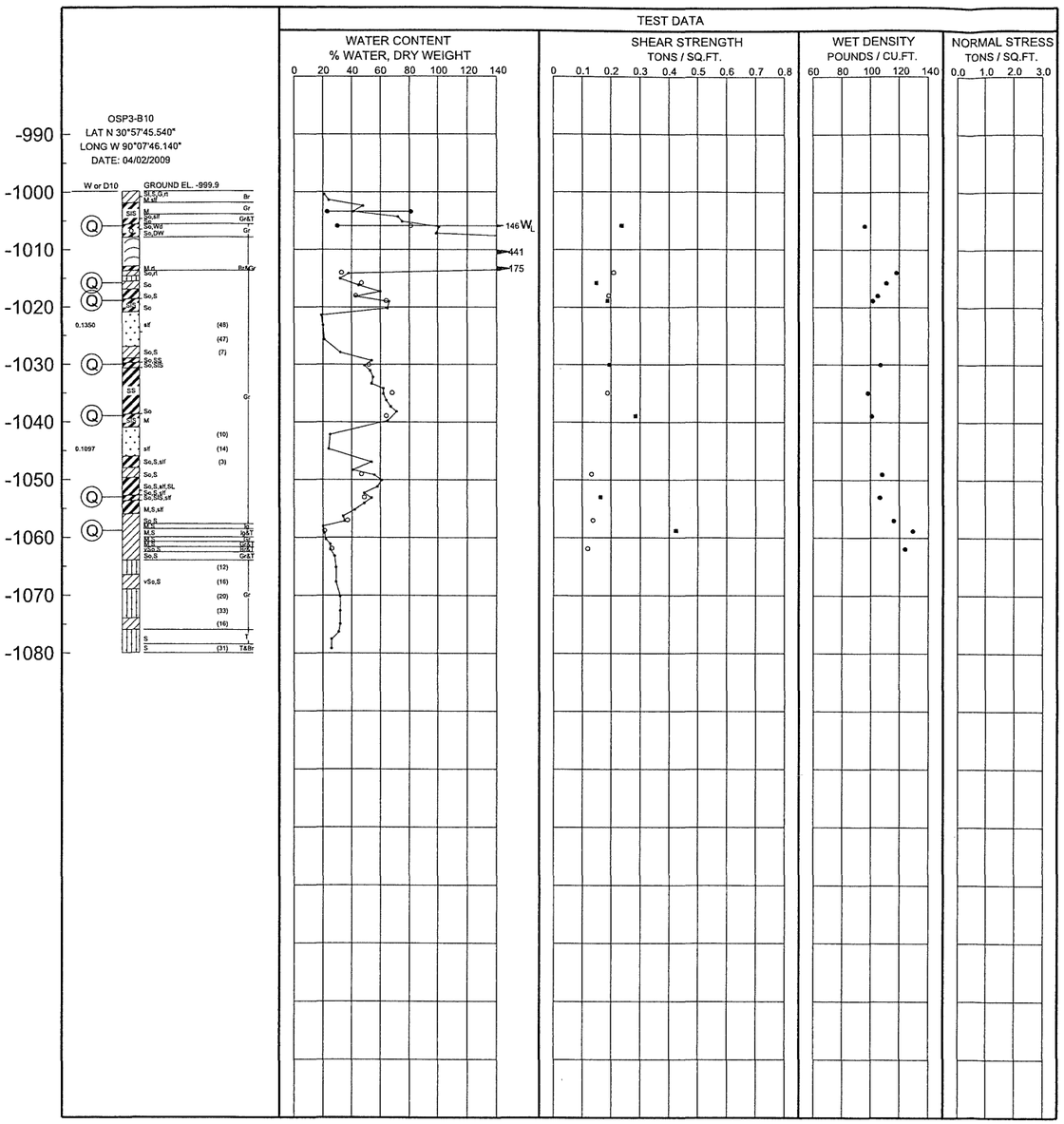

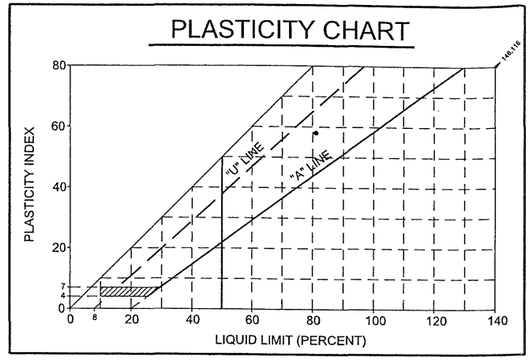

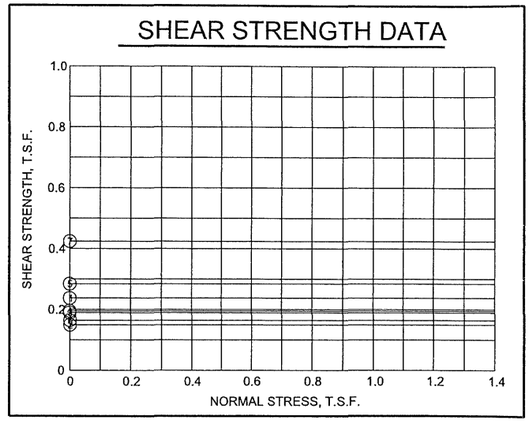

TABULAR TEST DATA

ENVELOPE NO.	ENVELOPE EL.	TYPE	STRENGTH V	STRENGTH C - TSF	CLASS
1	-1005.9	Q	0.0	0.237	CH
2	-1015.8	Q	0.0	0.149	CL
3	-1018.9	Q	0.0	0.189	CH
4	-1030.0	Q	0.0	0.195	CH
5	-1038.9	Q	0.0	0.284	CH
6	-1053.0	Q	0.0	0.164	CH
7	-1058.8	Q	0.0	0.424	CL

NOTES

- ○ - (UC) UNCONFINED COMPRESSION TEST
- ■ - (Q) UNCONSOLIDATED - UNDRAINED TRIAXIAL SHEAR TEST
- ▲ - (R) CONSOLIDATED - UNDRAINED TRIAXIAL SHEAR TEST
- ⊡ - (S) CONSOLIDATED - DRAINED DIRECT SHEAR TEST

W_P W_N W_L ATTERBERG LIMITS

BORING WAS TAKEN WITH A 5 INCH DIAMETER STEEL TUBE PISTON TYPE SAMPLER.
FOR SOIL BORING LEGEND SEE PLATE A.
FOR LOCATION OF BORINGS SEE PLATE
FOR DETAILED TEST DATA SEE

US ARMY CORPS OF ENGINEERS NEW ORLEANS DISTRICT

U.S. ARMY ENGINEER DISTRICT
CORPS OF ENGINEERS
MISSISSIPPI VALLEY DIVISION

DESIGNED BY: DRAWN BY: SUBMITTED BY: FILE NAME: DATE: SOLICITATION: CONTRACT NO: FILE NUMBER: PLOT SCALE: PLOT DATE:

SHEET IDENTIFICATION NUMBER

APPENDIX III

EUSTIS ENGINEERING SINCE 1946

LEGEND AND NOTES FOR LOG OF BORING AND TEST RESULTS

PP Pocket penetrometer: Resistance in tons per square foot

SPT Standard Penetration Test: Number of blows of a 140-lb hammer dropped 30 inches required to drive 2-in. O.D., 1.4-in. I.D. sampler a distance of 1 foot into the soil after first seating it 6 inches. Values shown have not been corrected.

SPLR Type of Sampling 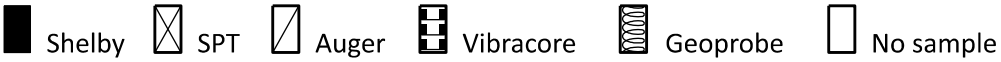 Shelby, SPT, Auger, Vibracore, Geoprobe, No sample

SYMBOL Clay, Silt, Sand, Peat/Humus, Shells, Stone/Gravel



Predominant type shown heavy; modifying type shown light

USC Unified Soil Classification

DENSITY Unit weight in pounds per cubic foot

SHEAR TESTS

TYPE

- UC Unconfined compression shear
- OB Unconsolidated undrained triaxial compression shear on one specimen confined at the approximate overburden pressure
- UU Unconsolidated undrained triaxial compression shear
- ϕ Angle of internal friction in degrees
- c Cohesion in pounds per square foot

ATTERBERG LIMITS

- LL Liquid Limit
- PL Plastic Limit
- PI Plasticity Index

OTHER TESTS

- CON Consolidation
- -#200 Percent passing a U.S. No. 200 sieve
- SV Particle size distribution (sieve only)
- PD Particle size distribution (sieve and hydrometer)
- k Coefficient of permeability in centimeters per second
- SP Swelling pressure in pounds per square foot

Other laboratory test results reported on separate figures

GENERAL NOTES

(1) If a ground water depth is shown on the boring log, these observations were made at the time of drilling and were measured below the existing ground surface. These observations are shown on the boring logs. However, ground water levels may vary due to seasonal fluctuations and other factors. If important to construction, the depth to ground water should be determined by those persons responsible for construction immediately prior to beginning work.

(2) While the individual logs of borings are considered to be representative of subsurface conditions at their respective locations on the dates shown, it is not warranted that they are representative of subsurface conditions at other locations and times.

EUSTIS ENGINEERING SINCE 1946

Sewerage & Water Board of New Orleans
West Power Complex Project
Carrollton Water Plant
New Orleans, Louisiana

LOG OF BORING AND TEST RESULTS

Boring: BH-1

Project No: 24753
Date: 03/04/2022
Latitude: 29.96114°
Longitude: -90.13176°

Elevation: 3.5
Datum: NAVD88
Water Depth: See Text
Total Depth: 120.0 ft

Scale in Feet	PP	SPT	S P L R	Symbol	Visual Classification	USC	Sample Number	Depth in Feet	Water Content %	Density Dry pcf	Density Wet pcf	Shear Tests Type	Shear Tests ϕ	Shear Tests C psf	Atterberg Limits LL	Atterberg Limits PL	Atterberg Limits PI		Other Tests
0		14			Moist, loose gray & tan fine SILTY SAND w/few gravel	SM	PB-1	0	24										
					Moist, loose gray & tan fine POORLY GRADED SAND	SP	PB-2	0.5											
5		13					PB-3	3.5											
		5			Moist, extremely soft to very soft gray & tan ORGANIC CLAY w/trace of decayed wood	OH	PB-4	6.5	71						124	32	92		
	0.25						5	8	108	40	84	UC	--	96					
10	0.25				Moist, soft dark gray, gray, & tan ORGANIC CLAY w/trace of roots & decayed wood	OH	6	11	112	40	86	OB	0	297					
	1.00						7	14	130	37	85	OB	0	443					
15	1.00				Moist, very soft brown & gray ORGANIC CLAY w/few decayed wood & roots	OH	8	18	156						149	42	107		
20	1.00				Moist, soft gray FAT CLAY w/few silt pockets & lenses	CH	9	23	65	61	101	UC	--	313	70	27	43		
25	1.00						10	28	55	69	106	OB	0	266					
30	1.00						11	33	65	61	101	UC	--	427					
35	1.00				Moist, medium stiff gray FAT CLAY w/trace of silt pockets & lenses	CH	12	38	53	69	106	OB	0	756	70	20	50		
40	1.00				Moist, very soft gray FAT CLAY w/trace of sand (fine layers)	CH	13	43	46	75	110	UC	--	248					
45					Moist, medium dense gray & tan fine POORLY GRADED SAND	SP	14	48	27										
50																			

EUSTIS_GINT_LIBRARY_1-28-2022.GLB EE STANDARD BORING LOG 24753.GPJ 4/18/22

NOTES:

EUSTIS ENGINEERING SINCE 1946

Sewerage & Water Board of New Orleans
West Power Complex Project
Carrollton Water Plant
New Orleans, Louisiana

LOG OF BORING AND TEST RESULTS

Boring: BH-1

Project No: 24753
Date: 03/04/2022
Latitude: 29.96114°
Longitude: -90.13176°

Elevation: 3.5
Datum: NAVD88
Water Depth: See Text
Total Depth: 120.0 ft

Scale in Feet	PP	SPT	S P L R	Symbol	Visual Classification	USC	Sample Number	Depth in Feet	Water Content %	Density Dry pcf	Density Wet pcf	Shear Tests Type	Shear Tests ϕ	Shear Tests C psf	Atterberg Limits LL	Atterberg Limits PL	Atterberg Limits PI	Other Tests
50					Moist, medium dense gray & tan fine POORLY GRADED SAND	SP												
	1.50				Moist, medium stiff gray LEAN CLAY w/few fine sand pockets & trace of shell fragments	CL	15	53	38	82	114	OB	0	716				
55	1.50						16	58	38	82	114	UC	--	782	42	23	19	
60	1.50				Moist, medium stiff gray FAT CLAY w/trace of silt pockets & shell fragments	CH	17	63	45									
65	2.00				Moist, medium stiff gray & tan LEAN CLAY W/SAND (fine)	CL	18	68	27	96	122	UC	--	601				-#200 = 66%
70	2.00				w/trace of fine sand (brittle)		19	73	31	92	120	OB	0	513				
75	1.00				Moist, medium stiff gray & tan FAT CLAY w/few silt pockets & lenses	CH	20	78	45									
80	1.00						21	83	45	74	108	UC	--	636				
85	1.00				Moist, loose gray & tan fine POORLY GRADED SAND W/SILT	SM	22	88	31	90	117	OB	0	565				-#200 = 9%
90					Moist, loose gray & tan fine POORLY GRADED SAND	SP	PB-23	93	28									
95		44			Moist, dense gray & tan fine POORLY GRADED SAND	SP	PB-24	95.5										
100		45					PB-25	98.5										

EUSTIS_GINT_LIBRARY_1-28-2022.GLB EE STANDARD BORING LOG 24753.GPJ 4/18/22

NOTES:

EUSTIS ENGINEERING SINCE 1946

Sewerage & Water Board of New Orleans
West Power Complex Project
Carrollton Water Plant
New Orleans, Louisiana

LOG OF BORING AND TEST RESULTS

Boring: BH-1

Project No: 24753
Date: 03/04/2022
Latitude: 29.96114°
Longitude: -90.13176°

Elevation: 3.5
Datum: NAVD88
Water Depth: See Text
Total Depth: 120.0 ft

Scale in Feet	PP	SPT	S P L R	Symbol	Visual Classification	USC	Sample Number	Depth in Feet	Water Content %	Density Dry pcf	Density Wet pcf	Shear Tests Type	Shear Tests	Shear Tests C psf	Atterberg Limits LL	Atterberg Limits PL	Atterberg Limits PI		Other Tests
100					Moist, dense gray & tan fine POORLY GRADED SAND	SP													
		46	X				PB-26	101.5	25										
105		44	X				PB-27	104.5											
		28	X		Moist, medium dense gray & tan fine POORLY GRADED SAND	SP	PB-28	108.5											
110																			
		25	X				PB-29	113.5											
115																			
		26	X				PB-30	118.5	24										
120																			
125																			
130																			
135																			
140																			
145																			
150																			

EUSTIS_GINT_LIBRARY_1-28-2022.GLB EE STANDARD BORING LOG 24753.GPJ 4/18/22

NOTES:

EUSTIS ENGINEERING SINCE 1946

Sewerage & Water Board of New Orleans
West Power Complex Project
Carrollton Water Plant
New Orleans, Louisiana

LOG OF BORING AND TEST RESULTS

Boring: BH-2

Project No: 24753
Date: 03/02/2022 - 03/03/2022
Latitude: 29.96148°
Longitude: -90.13146°

Elevation: 4.0
Datum: NAVD88
Water Depth: See Text
Total Depth: 120.0 ft

Scale in Feet	PP	SPT	S P L R	Symbol	Visual Classification	USC	Sample Number	Depth in Feet	Water Content %	Density Dry pcf	Density Wet pcf	Shear Tests Type	Shear Tests	Shear Tests C psf	Atterberg Limits LL	Atterberg Limits PL	Atterberg Limits PI		Other Tests
0		14			Moist, loose gray & tan fine POORLY GRADED SAND w/few gravel	SP	PB-1 PB-2	0 0.5	29										
		15					PB-3	3.5											
5		3			Moist, very soft gray & brown FAT CLAY w/few organic matter & decayed wood	CH	PB-4	6.5											
	0.25						5	8	102	45	91	UC	--	200	137	40	97		
10	0.25				Moist, very soft brown & gray ORGANIC CLAY w/few roots	OH	6	11	233	21	71	OB	0	221					
	0.25				Moist, very soft gray and tan ORGANIC CLAY w/few decayed wood	OH	7	14	99						139	42	97		
15	0.25						8	18	103	42	85	UC	--	183					
20	0.25				Moist, very soft gray & tan FAT CLAY w/few silty sand pockets and concretions	CH	9	23	56	64	100	OB	0	179					
25					Moist, medium gray fine SILTY SAND w/trace of clay pockets & lenses	SM													
	0.25						10	28	37										
30	0.25				Moist, soft gray FAT CLAY w/few fine sand pockets & lenses	CH	11	33	42	76	108	OB	0	265					
35																			
	1.00						12	38	46	73	106	UC	--	468	56	18	38		
40																			
	1.00				w/trace of fine sand pockets		13	43	50										
45																			
	1.00				Moist, medium stiff gray FAT CLAY w/trace of fine sand pockets & lenses	CH	14	48	57	66	104	OB	0	575					
50																			

EUSTIS_GINT_LIBRARY_1-28-2022.GLB EE STANDARD BORING LOG 24753.GPJ 4/18/22

NOTES:

EUSTIS ENGINEERING SINCE 1946

Sewerage & Water Board of New Orleans
West Power Complex Project
Carrollton Water Plant
New Orleans, Louisiana

LOG OF BORING AND TEST RESULTS

Boring: BH-2

Project No: 24753
Date: 03/02/2022 - 03/03/2022
Latitude: 29.96148°
Longitude: -90.13146°

Elevation: 4.0
Datum: NAVD88
Water Depth: See Text
Total Depth: 120.0 ft

Scale in Feet	PP	SPT	SPLR	Symbol	Visual Classification	USC	Sample Number	Depth in Feet	Water Content %	Density Dry pcf	Density Wet pcf	Shear Tests Type	Shear Tests Ø	Shear Tests C psf	Atterberg Limits LL	Atterberg Limits PL	Atterberg Limits PI		Other Tests
50					Moist, medium stiff gray FAT CLAY w/trace of fine sand pockets & lenses	CH													
55	1.00				Moist, medium stiff gray LEAN CLAY w/trace of fine sand pockets & shell fragments	CL	15	53	39	79	110	UC	--	753	38	18	20		
60	1.00				Moist, medium stiff gray FAT CLAY w/trace of fine sand pockets & shell fragments	CH	16	58											
65	1.00						17	63	53	67	102	OB	0	642					
70	2.00				Moist, stiff tan & gray FAT CLAY w/few fine sand pockets (brittle)	CH	18	68	32	88	116	OB	0	1133	56	18	38		-#200 = 65%
75	2.00				Moist, loose gray CLAYEY SAND	SC	19	73	28	92	118	UC	--	421					-#200 = 49%
80	1.00				Moist, soft to medium stiff gray FAT CLAY w/few fine sand pockets	CH	20	78							57	20	37		
85	1.00						21	83	50	72	107	UC	--	563					
90	1.00				Moist, medium dense tan & gray POORLY GRADED SAND	SP	22	88	34	87	116	OB	0	863					
95		29			Moist, medium dense gray & tan fine SAND W/SILT	SM	PB-23	93	28										
100		29					PB-24	95.5											
							PB-25	98.5	28										

EUSTIS_GINT_LIBRARY_1-28-2022.GLB EE STANDARD BORING LOG 24753.GPJ 4/18/22

NOTES:

EUSTIS ENGINEERING SINCE 1946

Sewerage & Water Board of New Orleans
West Power Complex Project
Carrollton Water Plant
New Orleans, Louisiana

LOG OF BORING AND TEST RESULTS

Boring: BH-2

Project No: 24753
Date: 03/02/2022 - 03/03/2022
Latitude: 29.96148°
Longitude: -90.13146°

Elevation: 4.0
Datum: NAVD88
Water Depth: See Text
Total Depth: 120.0 ft

Scale in Feet	PP	SPT	S P L R	Symbol	Visual Classification	USC	Sample Number	Depth in Feet	Water Content %	Density Dry pcf	Density Wet pcf	Shear Tests Type	Shear Tests	Shear Tests C psf	Atterberg Limits LL	Atterberg Limits PL	Atterberg Limits PI		Other Tests
100																			
		26			Moist, medium dense gray & tan fine SAND W/SILT	SM	PB-26	101.5											
105		26					PB-27	104.5	28										
							PB-28	108.5											
110		31			Moist, dense gray & tan fine POORLY GRADED SAND	SP													
		33					PB-29	113.5	27										
115																			
		32					PB-30	118.5											
120																			
125																			
130																			
135																			
140																			
145																			
150																			

EUSTIS_GINT_LIBRARY_1-28-2022.GLB EE STANDARD BORING LOG 24753.GPJ 4/18/22

NOTES:

EUSTIS ENGINEERING SINCE 1946

Sewerage & Water Board of New Orleans
West Power Complex Project
Carrollton Water Plant
New Orleans, Louisiana

LOG OF BORING AND TEST RESULTS

Boring: BH-3

Project No: 24753
Date: 02/28/2022 - 03/02/2022
Latitude: 29.96102°
Longitude: -90.13122°

Elevation: 3.8
Datum: NAVD88
Water Depth: See Text
Total Depth: 120.0 ft

Scale in Feet	PP	SPT	S P L R	Symbol	Visual Classification	USC	Sample Number	Depth in Feet	Water Content %	Density Dry pcf	Density Wet pcf	Shear Tests Type	Shear Tests	Shear Tests C psf	Atterberg Limits LL	Atterberg Limits PL	Atterberg Limits PI		Other Tests
0		15			Moist, loose gray & tan fine SAND W/SILT & few gravel	SM	PB-1	0											
					Moist, medium gray & tan fine POORLY GRADED SAND	SP	PB-2	0.5											
5		16					PB-3	3.5	33										
		4			Moist, soft gray & tan ORGANIC CLAY w/few roots & trace of silt pockets	OH	PB-4	6.5	111						89	23	66		
					Wet, WOOD w/trace of gray clay	Wd	PB-5	8	241										
10	0.25				Moist, extremely soft brown & gray ORGANIC CLAY w/few roots	OH	6	11	202	25	76	OB	0	113	192	45	147		
15	0.25				w/few decayed wood		7	14	308	18	72	UC	--	79					
	0.50				w/few silt pockets & trace of organic matter		8	18	114	41	88	UC	--	183	150	31	119		
20	0.50				Moist, soft gray FAT CLAY w/trace of roots & decayed wood	CH	9	23	60	64	103	OB	0	299					
25	0.50						10	28	61	63	102	UC	--	266	73	28	45		
30					Moist, loose gray & tan fine POORLY GRADED SAND	SP	11	33	24										
35	0.50				Moist, soft gray FAT CLAY w/trace of silt pockets & lenses	CH	12	38	53	69	105	UC	--	452					
40	0.50				w/few fine sand pockets & lenses		13	43	50	71	106	OB	0	286					
45					Moist, loose gray & tan fine POORLY GRADED SAND w/trace of clay	SP-SC	14	48	25										
50																			

EUSTIS_GINT_LIBRARY_1-28-2022.GLB EE STANDARD BORING LOG 24753.GPJ 4/18/22

NOTES:

EUSTIS ENGINEERING SINCE 1946

Sewerage & Water Board of New Orleans
West Power Complex Project
Carrollton Water Plant
New Orleans, Louisiana

LOG OF BORING AND TEST RESULTS

Boring: BH-3

Project No: 24753
Date: 02/28/2022 - 03/02/2022
Latitude: 29.96102°
Longitude: -90.13122°

Elevation: 3.8
Datum: NAVD88
Water Depth: See Text
Total Depth: 120.0 ft

Scale in Feet	PP	SPT	SPLR	Symbol	Visual Classification	USC	Sample Number	Depth in Feet	Water Content %	Density Dry pcf	Density Wet pcf	Shear Tests Type	Shear Tests Φ	Shear Tests C psf	Atterberg Limits LL	Atterberg Limits PL	Atterberg Limits PI	Other Tests
50					Moist, loose gray & tan fine POORLY GRADED SAND w/trace of clay	SP-SC												
					Moist, soft gray & tan LEAN CLAY w/few fine sand & trace of shell fragments	CL	PB-15	53	39						42	21	21	
55																		
	1.50				Moist, medium stiff gray FAT CLAY w/few silt pockets & shell fragments	CH	16	58	45	74	108	OB	0	859				
60																		
	1.50						17	63	47	74	109	UC	--	731				
65																		
	2.50				Moist, medium stiff tan & gray LEAN CLAY w/few fine sand pockets & lenses	CL	18	68	31	91	120	OB	0	828	44	16	28	
70																		
	2.00				Moist, loose tan & gray CLAYEY SAND (fine)	SC	19	73	31	91	119	UC	--	286				-#200 = 19%
75																		
	1.50						20	78	24									
80																		
	1.50				Moist, soft tan & gray FAT CLAY w/few fine sand pockets	CH	21A 21B	83 83.5	45	76	110	OB	0	443				
85																		
	0.25				Moist, loose gray fine SAND W/CLAY	SC	22	88	33	90	119	OB	0	291				-#200 = 12%
90																		
					Moist, loose gray & tan fine POORLY GRADED SAND W/SILT	SM	PB-23	93	26									SV
95																		
		26			Moist, medium dense gray & tan POORLY GRADED SAND	SP	PB-24	95.5	27									
100		27					PB-25	98.5										

NOTES:

EUSTIS_GINT_LIBRARY_1-28-2022.GLB EE STANDARD BORING LOG 24753.GPJ 4/18/22

EUSTIS ENGINEERING SINCE 1946

Sewerage & Water Board of New Orleans
West Power Complex Project
Carrollton Water Plant
New Orleans, Louisiana

LOG OF BORING AND TEST RESULTS

Boring: BH-3

Project No: 24753
Date: 02/28/2022 - 03/02/2022
Latitude: 29.96102°
Longitude: -90.13122°

Elevation: 3.8
Datum: NAVD88
Water Depth: See Text
Total Depth: 120.0 ft

Scale in Feet	PP	SPT	S P L R	Symbol	Visual Classification	USC	Sample Number	Depth in Feet	Water Content %	Density Dry pcf	Density Wet pcf	Shear Tests Type	Shear Tests	Shear Tests C psf	Atterberg Limits LL	Atterberg Limits PL	Atterberg Limits PI		Other Tests
100					Moist, medium dense gray & tan POORLY GRADED SAND	SP													
		30					PB-26	101.5											
105		27					PB-27	104.5	28										
110		28					PB-28	108.5											
		27					PB-29	113.5											
115																			
120		27					PB-30	118.5	22										
125																			
130																			
135																			
140																			
145																			
150																			

EUSTIS_GINT_LIBRARY_1-28-2022.GLB EE STANDARD BORING LOG 24753.GPJ 4/18/22

NOTES:

Particle Size Distribution Report

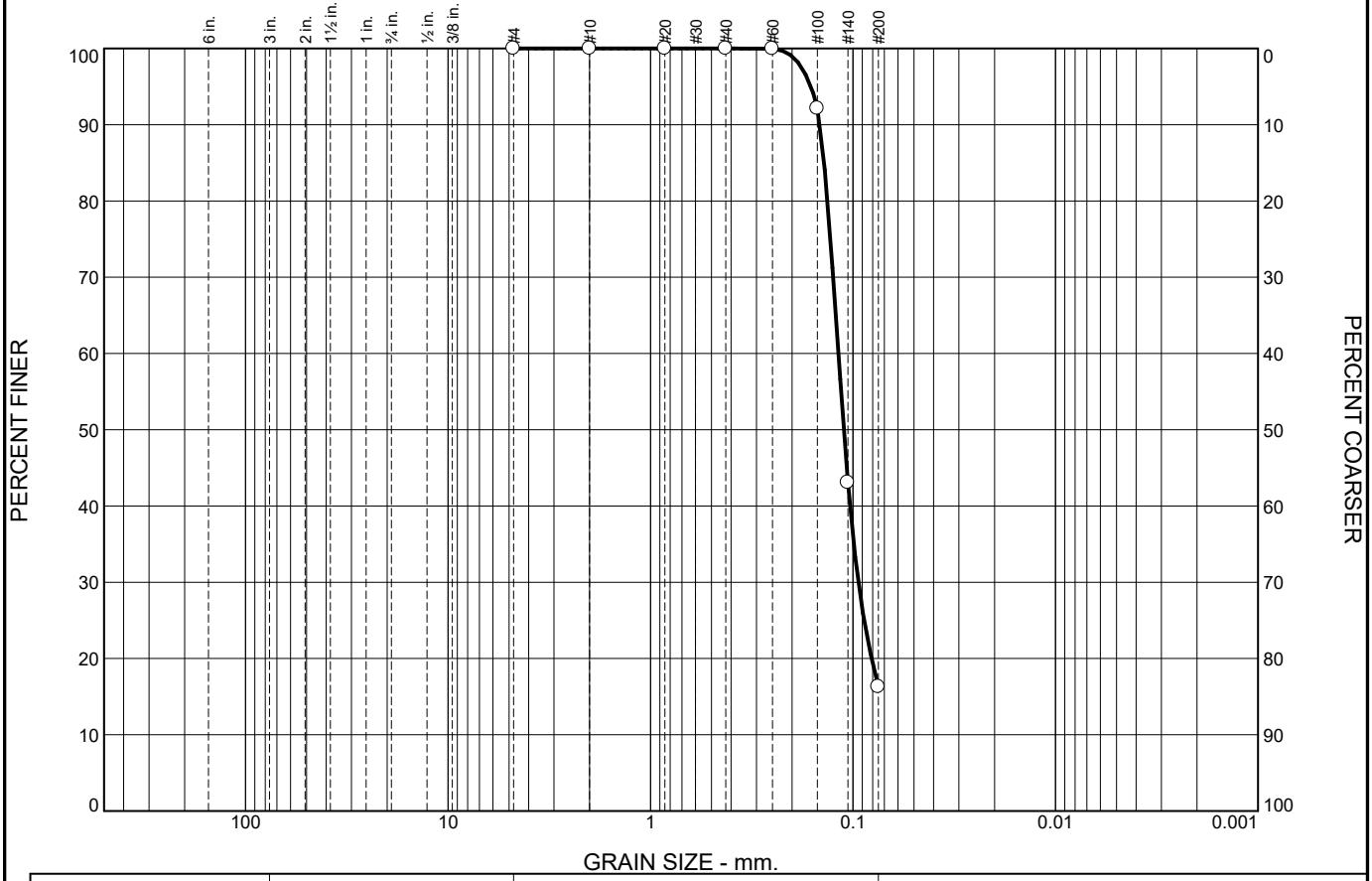

	% +3"	% Gravel		% Sand			% Fines	
		Coarse	Fine	Coarse	Medium	Fine	Silt	Clay
○	0.0	0.0	0.0	0.0	0.0	83.7	16.3	

	LL	PL	D_{85}	D_{60}	D_{50}	D_{30}	D_{15}	D_{10}	C_c	C_u
○			0.1388	0.1181	0.1111	0.0941				

Material Description	USCS	AASHTO
○ Moist, loose gray & tan fine SILTY SAND	SM	

Project No. 24753 **Client:** POWER ENGINEERS, INC., OVERLAND PARK, KANSAS

Project: SEWERAGE & WATER BOARD OF NEW ORLEANS - WEST POWER COMPLEX PROJECT,

○ **Source of Sample:** BH-3 **Depth:** 93 **Sample Number:** PB-23

Remarks:

EUSTIS ENGINEERING SINCE 1946

Figure

Tested By: SL **Checked By:** CD & RR

THERMAL CONDUCTIVITY TEST
(ASTM D 5334-14)

DATE: 4/21/2022	**PROJECT NAME:** SEWERAGE & WATER BOARD OF NEW ORLEANS - WEST POWER COMP		**PROJECT NO.:** 24753
BORING NO.: BH-1	**SAMPLE NO.:** 1A		**DEPTH:** 1-ft
VISUAL CLASSIFICATION: Moist, gray fine POORLY GRADED SAND			

TARE ID:	**TARE+WET MASS:** 167.97 g	**TARE + DRY MASS:** 161.27 g	**TARE:** 130.45 g	**WATER CONTENT:** 21.74%
SAMPLE CONDITION: REMOLD	**CONTAINER MASS:** 0.00 g	**SPECIMEN+CONTAINER MASS:** **3017.5** g	**SPECIMEN HEIGHT:** 381.00 mm	**SPECIMEN DIAMETER:** 76.20 mm
TEST ID: N/A	**SPECIMEN VOLUME:** 1736.62 cm³	**SPECIMEN WET MASS:** 3017.50 g	**WET UNIT WEIGHT:** 108.47 pcf	**DRY UNIT WEIGHT:** 89.10 pcf

CURRENT, I = .089 (A)	**RESISTANCE, r =** 521.40 Ω/m	**HEAT INPUT, $Q=I^2r$=** 4.13 W/m
THERMAL CONDUCTIVITY: λ = 2.052 W/(m·K)	**METHOD OF NEEDLE INSERTION:** PUSHED	**THERMAL RESISTIVITY** ρ = 0.488 (m·K)/W
THERMAL CONDUCTIVITY METER/PROBE ID: KD2 PRO SML1-TPA-1	**CALIBRATION FACTOR:** C =1.124	**DATE VERIFIED:** 7/15/2020

ELAPSED TIME (SEC)	TEMP °C	ELAPSED TIME (SEC)	TEMP °C
10	22.673	310	22.699
20	22.814	320	22.571
30	22.888	330	22.497
40	22.938	340	22.446
50	22.975	350	22.408
60	23.005	360	22.376
70	23.030	370	22.349
80	23.051	380	22.326
90	23.068	390	22.305
100	23.084	400	22.287
110	23.098	410	22.270
120	23.110	420	22.255
130	23.121	430	22.241
140	23.130	440	22.226
150	23.139	450	22.214
160	23.146	460	22.202
170	23.150	470	22.191
180	23.156	480	22.179
190	23.164	490	22.169
200	23.170	500	22.159
210	23.174	510	22.150
220	23.179	520	22.140
230	23.181	530	22.130
240	23.183	540	22.122
250	23.186	550	22.114
260	23.188	560	22.106
270	23.189	570	22.098
280	23.192	580	22.091
290	23.193	590	22.082
300	23.195	600	22.074

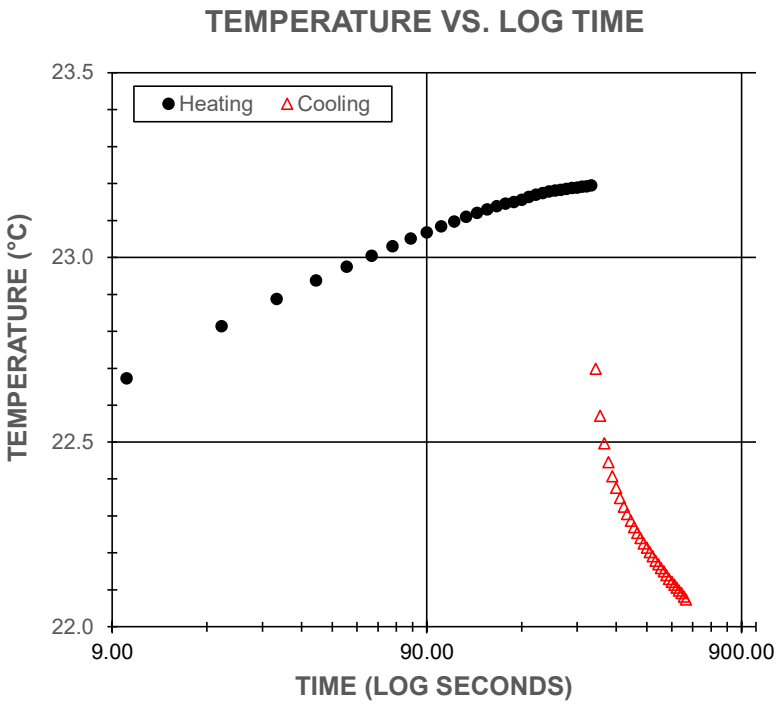

Tested By: JP & RR
Date: 4/21/2022

Input By: JP
Date: 4/21/2022

Reviewed By: PAT
Date: 8/24/2022

THERMAL CONDUCTIVITY TEST
(ASTM D 5334-14)

DATE:	PROJECT NAME:		PROJECT NO.:
4/21/2022	SEWERAGE & WATER BOARD OF NEW ORLEANS - WEST POWER COMP		24753
BORING NO.: BH-1	**SAMPLE NO.:** 1B		**DEPTH:** 1-ft
VISUAL CLASSIFICATION: Moist, gray fine POORLY GRADED SAND			

TARE ID:	TARE+WET MASS:	TARE + DRY MASS:	TARE:	WATER CONTENT:
	194.5 g	183.5 g	130.45 g	20.74%
SAMPLE CONDITION: REMOLD	**CONTAINER MASS:** 0.00 g	**SPECIMEN+CONTAINER MASS:** **1178.3** g	**SPECIMEN HEIGHT:** 152.40 mm	**SPECIMEN DIAMETER:** 76.20 mm
TEST ID: N/A	**SPECIMEN VOLUME:** 694.65 cm³	**SPECIMEN WET MASS:** 1178.30 g	**WET UNIT WEIGHT:** 105.89 pcf	**DRY UNIT WEIGHT:** 87.71 pcf

CURRENT, I = .087 (A)	RESISTANCE, r = 523.19 Ω/m	HEAT INPUT, $Q=I^2r$= 3.960 W/m
THERMAL CONDUCTIVITY: λ = 2.158 W/(m·K)	**METHOD OF NEEDLE INSERTION:** PUSHED	**THERMAL RESISTIVITY** ρ = 0.464 (m·K)/W
THERMAL CONDUCTIVITY METER/PROBE ID: KD2 PRO SML1-TPA-1	**CALIBRATION FACTOR:** C =1.124	**DATE VERIFIED:** 7/15/2020

ELAPSED TIME (SEC)	TEMP °C	ELAPSED TIME (SEC)	TEMP °C
10	24.709	310	24.571
20	24.835	320	24.433
30	24.909	330	24.352
40	24.958	340	24.294
50	24.991	350	24.250
60	25.011	360	24.213
70	25.036	370	24.182
80	25.051	380	24.154
90	25.064	390	24.129
100	25.071	400	24.107
110	25.079	410	24.086
120	25.084	420	24.068
130	25.093	430	24.051
140	25.104	440	24.034
150	25.110	450	24.019
160	25.114	460	24.005
170	25.118	470	23.991
180	25.120	480	23.979
190	25.125	490	23.966
200	25.128	500	23.955
210	25.129	510	23.944
220	25.129	520	23.934
230	25.129	530	23.923
240	25.128	540	23.914
250	25.127	550	23.904
260	25.127	560	23.895
270	25.125	570	23.887
280	25.123	580	23.879
290	25.122	590	23.871
300	25.120	600	23.863

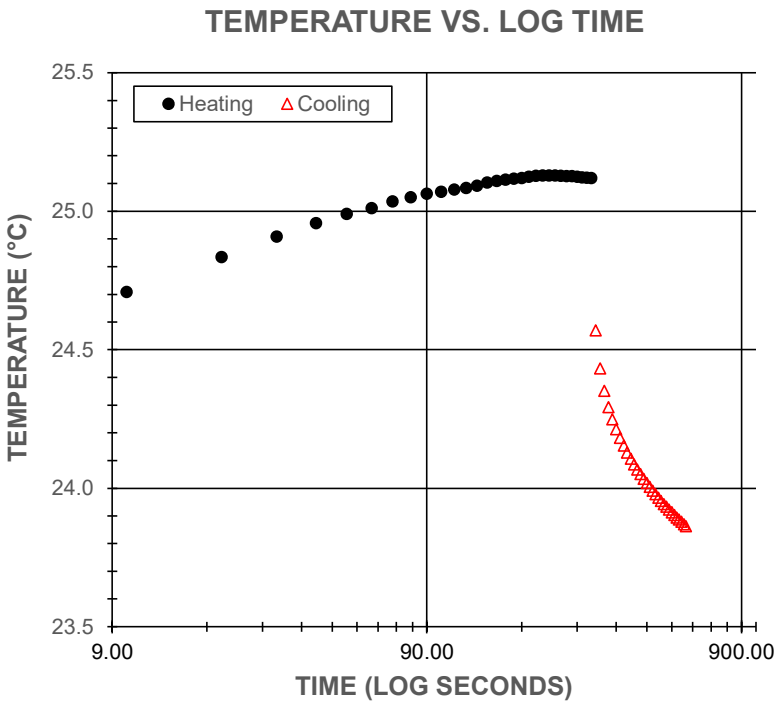

Tested By: JP & RR
Date: 4/21/2022

Input By: JP
Date: 4/21/2022

Reviewed By: PAT
Date: 8/24/2022

THERMAL CONDUCTIVITY TEST
(ASTM D 5334-14)

DATE: 4/21/2022	**PROJECT NAME:** SEWERAGE & WATER BOARD OF NEW ORLEANS - WEST POWER COMP		**PROJECT NO.:** 24753
BORING NO.: BH-1	**SAMPLE NO.:** 1C		**DEPTH:** 1-ft
VISUAL CLASSIFICATION: Moist, gray fine POORLY GRADED SAND			

TARE ID:	**TARE+WET MASS:**	**TARE + DRY MASS:**	**TARE:**	**WATER CONTENT:**
	161.66 g	158.04 g	130.45 g	13.12%
SAMPLE CONDITION:	**CONTAINER MASS:**	**SPECIMEN+CONTAINER MASS:**	**SPECIMEN HEIGHT:**	**SPECIMEN DIAMETER:**
REMOLD	0.00 g	**1074.6** g	152.40 mm	76.20 mm
TEST ID:	**SPECIMEN VOLUME:**	**SPECIMEN WET MASS:**	**WET UNIT WEIGHT:**	**DRY UNIT WEIGHT:**
N/A	694.65 cm³	1074.60 g	96.57 pcf	85.37 pcf

CURRENT, I = .087 (A)	**RESISTANCE, r =** 524.51 Ω/m	**HEAT INPUT, $Q=I^2r=$** 3.970 W/m
THERMAL CONDUCTIVITY: λ = 1.969 W/(m·K)	**METHOD OF NEEDLE INSERTION:** PUSHED	**THERMAL RESISTIVITY** ρ = 0.508 (m·K)/W
THERMAL CONDUCTIVITY METER/PROBE ID: KD2 PRO SML1-TPA-1	**CALIBRATION FACTOR:** C =1.124	**DATE VERIFIED:** 7/15/2020

ELAPSED TIME (SEC)	TEMP °C	ELAPSED TIME (SEC)	TEMP °C
10	26.174	310	25.937
20	26.327	320	25.765
30	26.406	330	25.665
40	26.458	340	25.594
50	26.493	350	25.537
60	26.520	360	25.490
70	26.541	370	25.449
80	26.557	380	25.413
90	26.569	390	25.381
100	26.578	400	25.351
110	26.584	410	25.324
120	26.590	420	25.299
130	26.594	430	25.275
140	26.597	440	25.254
150	26.597	450	25.232
160	26.598	460	25.212
170	26.596	470	25.193
180	26.595	480	25.175
190	26.594	490	25.157
200	26.592	500	25.141
210	26.589	510	25.125
220	26.587	520	25.109
230	26.583	530	25.094
240	26.579	540	25.079
250	26.576	550	25.065
260	26.572	560	25.050
270	26.567	570	25.036
280	26.563	580	25.024
290	26.558	590	25.010
300	26.553	600	24.997

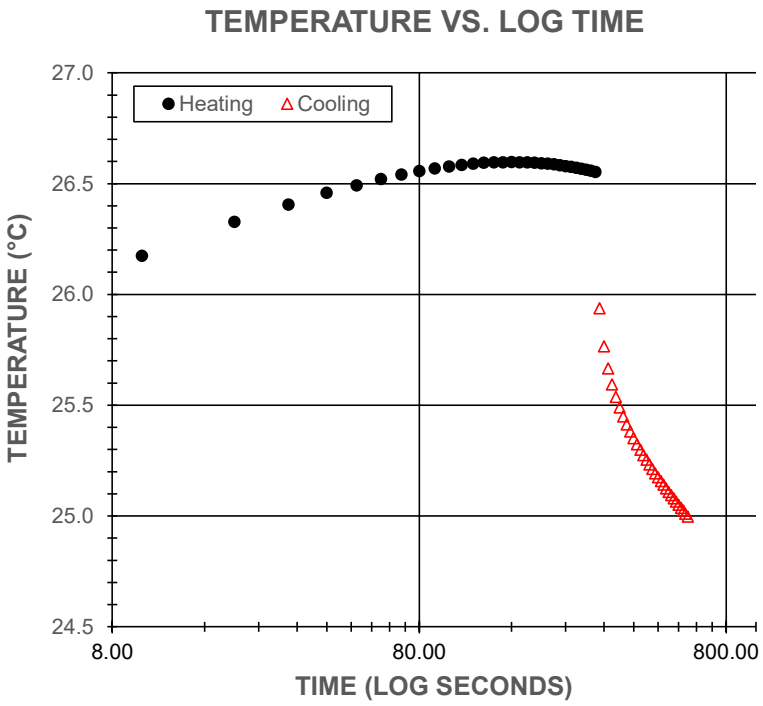

Tested By: JP & RR
Date: 4/21/2022

Input By: JP
Date: 4/21/2022

Reviewed By: PAT
Date: 8/24/2022

THERMAL CONDUCTIVITY TEST
(ASTM D 5334-14)

DATE: 4/21/2022	**PROJECT NAME:** SEWERAGE & WATER BOARD OF NEW ORLEANS - WEST POWER COMP		**PROJECT NO.:** 24753
BORING NO.: BH-1	**SAMPLE NO.:** 1D		**DEPTH:** 1-ft
VISUAL CLASSIFICATION: Moist, gray fine POORLY GRADED SAND			

TARE ID:	**TARE+WET MASS:**	**TARE + DRY MASS:**	**TARE:**	**WATER CONTENT:**
	174.71 g	171.48 g	130.45 g	7.87%
SAMPLE CONDITION:	**CONTAINER MASS:**	**SPECIMEN+CONTAINER MASS:**	**SPECIMEN HEIGHT:**	**SPECIMEN DIAMETER:**
REMOLD	0.00 g	**1085.2** g	152.40 mm	76.20 mm
TEST ID:	**SPECIMEN VOLUME:**	**SPECIMEN WET MASS:**	**WET UNIT WEIGHT:**	**DRY UNIT WEIGHT:**
N/A	694.65 cm³	1085.20 g	97.53 pcf	90.41 pcf

CURRENT, I = .087 (A)	**RESISTANCE, r =** 517.90 Ω/m	**HEAT INPUT, $Q=I^2r=$** 3.920 W/m
THERMAL CONDUCTIVITY: λ = 1.269 W/(m·K)	**METHOD OF NEEDLE INSERTION:** PUSHED	**THERMAL RESISTIVITY** ρ = 0.788 (m·K)/W
THERMAL CONDUCTIVITY METER/PROBE ID: KD2 PRO SML1-TPA-1	**CALIBRATION FACTOR:** C =1.124	**DATE VERIFIED:** 7/15/2020

ELAPSED TIME (SEC)	TEMP °C	ELAPSED TIME (SEC)	TEMP °C
10	23.158	310	23.290
20	23.337	320	23.116
30	23.435	330	23.020
40	23.502	340	22.955
50	23.552	350	22.905
60	23.593	360	22.866
70	23.626	370	22.833
80	23.654	380	22.805
90	23.678	390	22.781
100	23.700	400	22.758
110	23.720	410	22.739
120	23.737	420	22.720
130	23.753	430	22.704
140	23.767	440	22.689
150	23.782	450	22.674
160	23.794	460	22.661
170	23.804	470	22.647
180	23.816	480	22.636
190	23.826	490	22.624
200	23.835	500	22.612
210	23.843	510	22.601
220	23.851	520	22.591
230	23.858	530	22.581
240	23.865	540	22.571
250	23.871	550	22.561
260	23.877	560	22.552
270	23.882	570	22.543
280	23.887	580	22.534
290	23.892	590	22.525
300	23.896	600	22.517

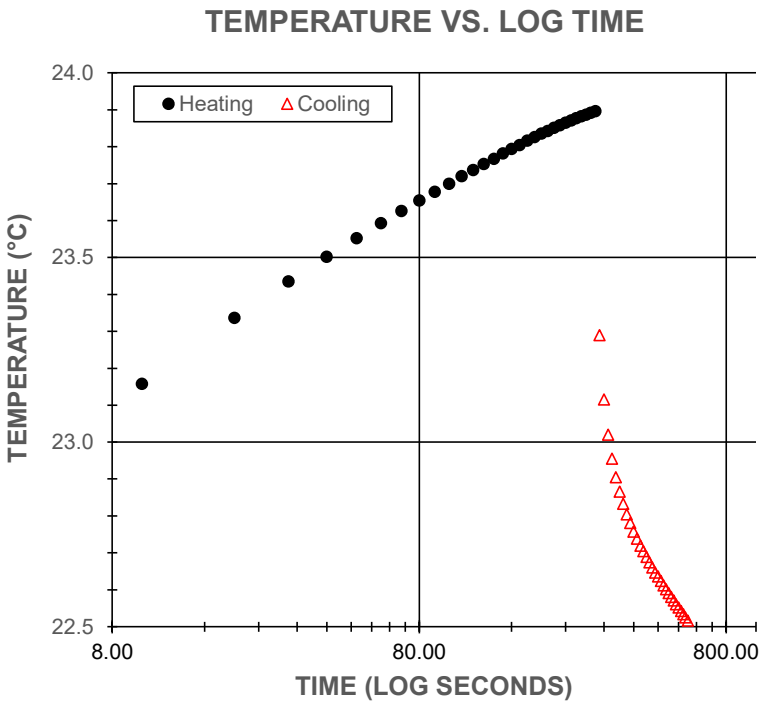

Tested By: JP & RR
Date: 4/21/2022

Input By: JP
Date: 4/21/2022

Reviewed By: PAT
Date: 8/24/2022

THERMAL CONDUCTIVITY TEST
(ASTM D 5334-14)

DATE:	PROJECT NAME:		PROJECT NO.:
4/21/2022	SEWERAGE & WATER BOARD OF NEW ORLEANS - WEST POWER COMP		24753
BORING NO.: BH-1	**SAMPLE NO.:** 2A		**DEPTH:**
VISUAL CLASSIFICATION: Moist, gray fine POORLY GRADED SAND			

TARE ID:	TARE+WET MASS:	TARE + DRY MASS:	TARE:	INITIAL WATER CONTENT:
	160.34 g	155.32 g	130.45 g	20.18%
SAMPLE CONDITION: REMOLD	**CONTAINER MASS:** 0.00 g	**SPECIMEN+CONTAINER MASS:** **2775.1** g	**SPECIMEN HEIGHT:** 304.80 mm	**SPECIMEN DIAMETER:** 76.20 mm
TEST ID: N/A	**SPECIMEN VOLUME:** 1389.30 cm^3	**SPECIMEN WET MASS:** 2775.10 g	**WET UNIT WEIGHT:** 124.70 pcf	**DRY UNIT WEIGHT:** 103.76 pcf

CURRENT, I = .085 (A)	RESISTANCE, r = 520.42 Ω/m	HEAT INPUT, $Q=I^2r$= 3.760 W/m
THERMAL CONDUCTIVITY: λ = 2.064 W/(m·K)	**METHOD OF NEEDLE INSERTION:** PUSHED	**THERMAL RESISTIVITY** ρ = 0.485 (m·K)/W
THERMAL CONDUCTIVITY METER/PROBE ID: KD2 PRO SML1-TPA-1	**CALIBRATION FACTOR:** C =1.124	**DATE VERIFIED:** 7/15/2020

ELAPSED TIME (SEC)	TEMP °C	ELAPSED TIME (SEC)	TEMP °C
10	22.572	310	22.597
20	22.688	320	22.483
30	22.756	330	22.417
40	22.801	340	22.371
50	22.837	350	22.336
60	22.864	360	22.307
70	22.885	370	22.283
80	22.902	380	22.261
90	22.919	390	22.243
100	22.932	400	22.226
110	22.941	410	22.211
120	22.950	420	22.197
130	22.960	430	22.184
140	22.969	440	22.172
150	22.973	450	22.160
160	22.981	460	22.150
170	22.990	470	22.139
180	22.996	480	22.130
190	22.996	490	22.119
200	23.005	500	22.112
210	23.011	510	22.102
220	23.015	520	22.094
230	23.018	530	22.086
240	23.020	540	22.078
250	23.022	550	22.070
260	23.024	560	22.063
270	23.024	570	22.056
280	23.022	580	22.048
290	23.025	590	22.041
300	23.026	600	22.035

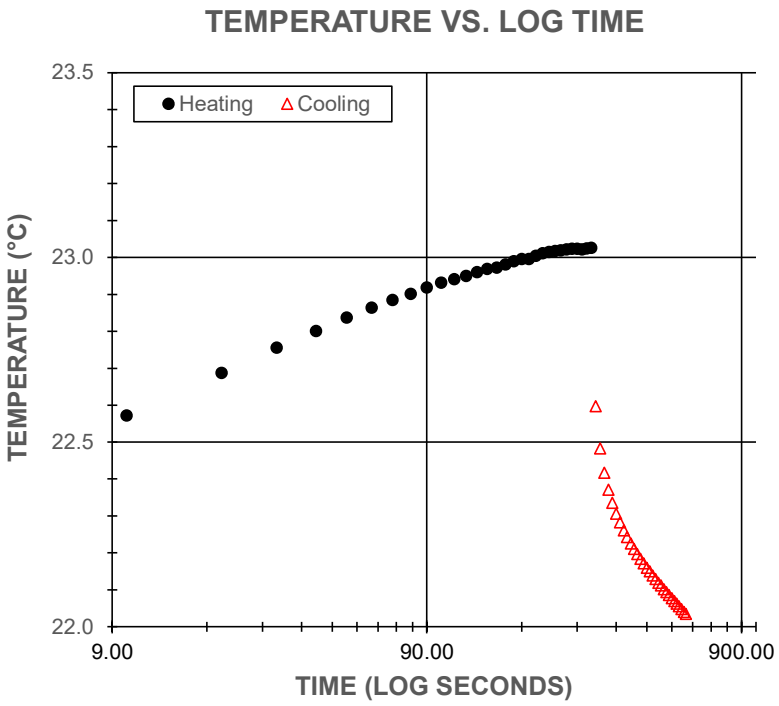

Tested By: JP & RR
Date: 4/21/2022

Input By: JP
Date: 4/21/2022

Reviewed By: PAT
Date: 8/24/2022

THERMAL CONDUCTIVITY TEST
(ASTM D 5334-14)

DATE:	PROJECT NAME:		PROJECT NO.:
4/21/2022	SEWERAGE & WATER BOARD OF NEW ORLEANS - WEST POWER COMP		24753
BORING NO.: BH-1	**SAMPLE NO.:** 2B		**DEPTH:**
VISUAL CLASSIFICATION: Moist, gray fine POORLY GRADED SAND			

TARE ID:	TARE+WET MASS:	TARE + DRY MASS:	TARE:	INITIAL WATER CONTENT:
	174.22 g	167.4 g	130.45 g	18.46%
SAMPLE CONDITION: REMOLD	**CONTAINER MASS:** 0.00 g	**SPECIMEN+CONTAINER MASS:** **1175.8** g	**SPECIMEN HEIGHT:** 152.40 mm	**SPECIMEN DIAMETER:** 76.20 mm
TEST ID: N/A	**SPECIMEN VOLUME:** 694.65 cm³	**SPECIMEN WET MASS:** 1175.80 g	**WET UNIT WEIGHT:** 105.67 pcf	**DRY UNIT WEIGHT:** 89.20 pcf

CURRENT, I = .085 (A)	RESISTANCE, r = 516.26 Ω/m	HEAT INPUT, $Q=I^2r=$ 3.730 W/m
THERMAL CONDUCTIVITY: λ = 1.726 W/(m·K)	**METHOD OF NEEDLE INSERTION:** PUSHED	**THERMAL RESISTIVITY** ρ = 0.579 (m·K)/W
THERMAL CONDUCTIVITY METER/PROBE ID: KD2 PRO SML1-TPA-1	**CALIBRATION FACTOR:** C =1.124	**DATE VERIFIED:** 7/15/2020

ELAPSED TIME (SEC)	TEMP °C	ELAPSED TIME (SEC)	TEMP °C
10	24.638	310	24.596
20	24.764	320	24.458
30	24.833	330	24.379
40	24.878	340	24.323
50	24.908	350	24.279
60	24.938	360	24.245
70	24.959	370	24.215
80	24.975	380	24.189
90	24.987	390	24.166
100	24.999	400	24.146
110	25.006	410	24.127
120	25.014	420	24.111
130	25.019	430	24.095
140	25.023	440	24.080
150	25.024	450	24.066
160	25.027	460	24.053
170	25.049	470	24.042
180	25.061	480	24.029
190	25.068	490	24.017
200	25.073	500	24.007
210	25.077	510	23.997
220	25.080	520	23.986
230	25.083	530	23.976
240	25.084	540	23.965
250	25.087	550	23.956
260	25.088	560	23.947
270	25.089	570	23.938
280	25.090	580	23.929
290	25.091	590	23.920
300	25.092	600	23.911

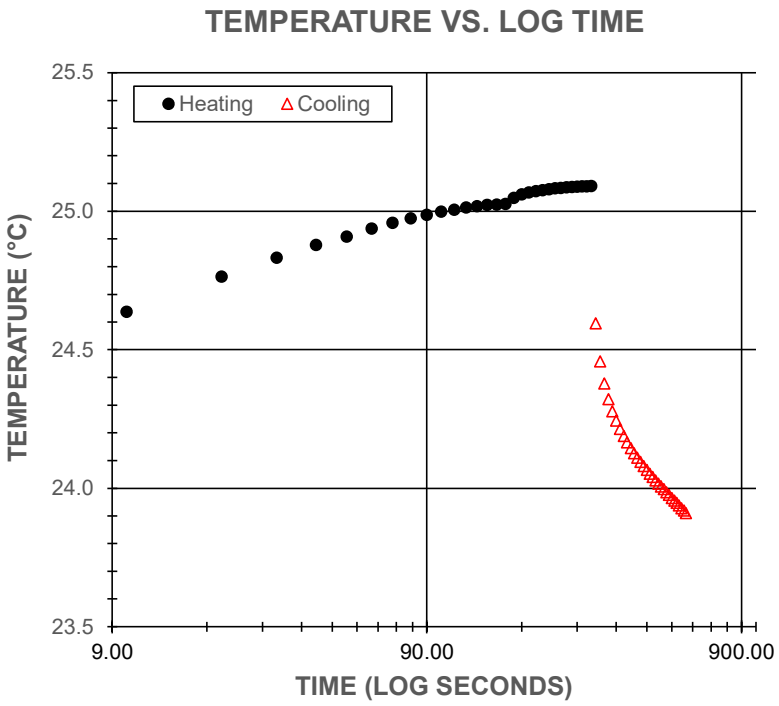

Tested By: JP & RR
Date: 4/21/2022

Input By: JP
Date: 4/21/2022

Reviewed By: PAT
Date: 8/24/2022

THERMAL CONDUCTIVITY TEST
(ASTM D 5334-14)

DATE:	PROJECT NAME:		PROJECT NO.:
4/21/2022	SEWERAGE & WATER BOARD OF NEW ORLEANS - WEST POWER COMP		24753
BORING NO.: BH-1	**SAMPLE NO.:** 2C		**DEPTH:**
VISUAL CLASSIFICATION: Moist, gray fine POORLY GRADED SAND			

TARE ID:	TARE+WET MASS:	TARE + DRY MASS:	TARE:	INITIAL WATER CONTENT:
	186.12 g	178.19 g	130.45 g	16.61%
SAMPLE CONDITION: REMOLD	**CONTAINER MASS:** 0.00 g	**SPECIMEN+CONTAINER MASS:** **1102.4** g	**SPECIMEN HEIGHT:** 152.40 mm	**SPECIMEN DIAMETER:** 76.20 mm
TEST ID: N/A	**SPECIMEN VOLUME:** 694.65 cm³	**SPECIMEN WET MASS:** 1102.40 g	**WET UNIT WEIGHT:** 99.07 pcf	**DRY UNIT WEIGHT:** 84.96 pcf

CURRENT, I = .085 (A)	RESISTANCE, r = 523.18 Ω/m	HEAT INPUT, $Q=I^2r$= 3.780 W/m
THERMAL CONDUCTIVITY: λ = 1.760 W/(m·K)	**METHOD OF NEEDLE INSERTION:** PUSHED	**THERMAL RESISTIVITY** ρ = 0.569 (m·K)/W
THERMAL CONDUCTIVITY METER/PROBE ID: KD2 PRO SML1-TPA-1	**CALIBRATION FACTOR:** C =1.124	**DATE VERIFIED:** 7/15/2020

ELAPSED TIME (SEC)	TEMP °C	ELAPSED TIME (SEC)	TEMP °C
10	23.555	310	23.577
20	23.712	320	23.410
30	23.797	330	23.314
40	23.853	340	23.246
50	23.892	350	23.194
60	23.929	360	23.151
70	23.972	370	23.116
80	24.000	380	23.086
90	24.024	390	23.058
100	24.041	400	23.035
110	24.057	410	23.014
120	24.068	420	22.994
130	24.076	430	22.975
140	24.086	440	22.959
150	24.095	450	22.945
160	24.096	460	22.930
170	24.098	470	22.917
180	24.108	480	22.905
190	24.115	490	22.893
200	24.127	500	22.882
210	24.132	510	22.871
220	24.136	520	22.862
230	24.140	530	22.854
240	24.142	540	22.844
250	24.145	550	22.837
260	24.148	560	22.828
270	24.149	570	22.821
280	24.150	580	22.814
290	24.150	590	22.808
300	24.151	600	22.801

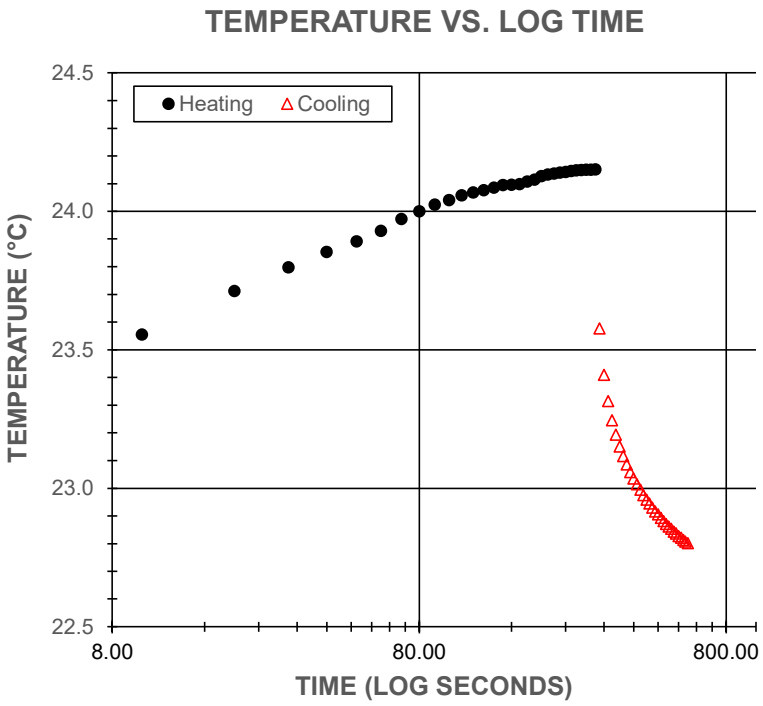

Tested By: JP & RR
Date: 4/21/2022

Input By: JP
Date: 4/21/2022

Reviewed By: PAT
Date: 8/24/2022

THERMAL CONDUCTIVITY TEST
(ASTM D 5334-14)

DATE: 4/21/2022	**PROJECT NAME:** SEWERAGE & WATER BOARD OF NEW ORLEANS - WEST POWER COMP		**PROJECT NO.:** 24753
BORING NO.: BH-1	**SAMPLE NO.:** 2D		**DEPTH:** 5-ft
VISUAL CLASSIFICATION: Moist, gray fine POORLY GRADED SAND			

TARE ID:	**TARE+WET MASS:** 198.22 g	**TARE + DRY MASS:** 189.72 g	**TARE:** 130.45 g	**INITIAL WATER CONTENT:** 14.34%
SAMPLE CONDITION: REMOLD	**CONTAINER MASS:** 0.00 g	**SPECIMEN+CONTAINER MASS:** **1077.7** g	**SPECIMEN HEIGHT:** 152.40 mm	**SPECIMEN DIAMETER:** 76.20 mm
TEST ID: N/A	**SPECIMEN VOLUME:** 694.65 cm³	**SPECIMEN WET MASS:** 1077.70 g	**WET UNIT WEIGHT:** 96.85 pcf	**DRY UNIT WEIGHT:** 84.71 pcf

CURRENT, I = .085 (A)	**RESISTANCE, r =** 517.65 Ω/m	**HEAT INPUT, $Q=I^2r=$** 3.740 W/m
THERMAL CONDUCTIVITY: λ = 2.094 W/(m·K)	**METHOD OF NEEDLE INSERTION:** PUSHED	**THERMAL RESISTIVITY** ρ = 0.478 (m·K)/W
THERMAL CONDUCTIVITY METER/PROBE ID: KD2 PRO SML1-TPA-1	**CALIBRATION FACTOR:** C =1.124	**DATE VERIFIED:** 7/15/2020

ELAPSED TIME (SEC)	TEMP °C	ELAPSED TIME (SEC)	TEMP °C
10	25.114	310	24.947
20	25.282	320	24.766
30	25.370	330	24.662
40	25.428	340	24.588
50	25.468	350	24.533
60	25.499	360	24.486
70	25.522	370	24.446
80	25.540	380	24.412
90	25.555	390	24.381
100	25.566	400	24.354
110	25.575	410	24.329
120	25.582	420	24.306
130	25.587	430	24.285
140	25.591	440	24.265
150	25.595	450	24.247
160	25.596	460	24.230
170	25.597	470	24.213
180	25.598	480	24.199
190	25.597	490	24.183
200	25.596	500	24.170
210	25.594	510	24.156
220	25.592	520	24.144
230	25.589	530	24.132
240	25.588	540	24.120
250	25.585	550	24.110
260	25.581	560	24.098
270	25.578	570	24.088
280	25.574	580	24.078
290	25.571	590	24.068
300	25.567	600	24.060

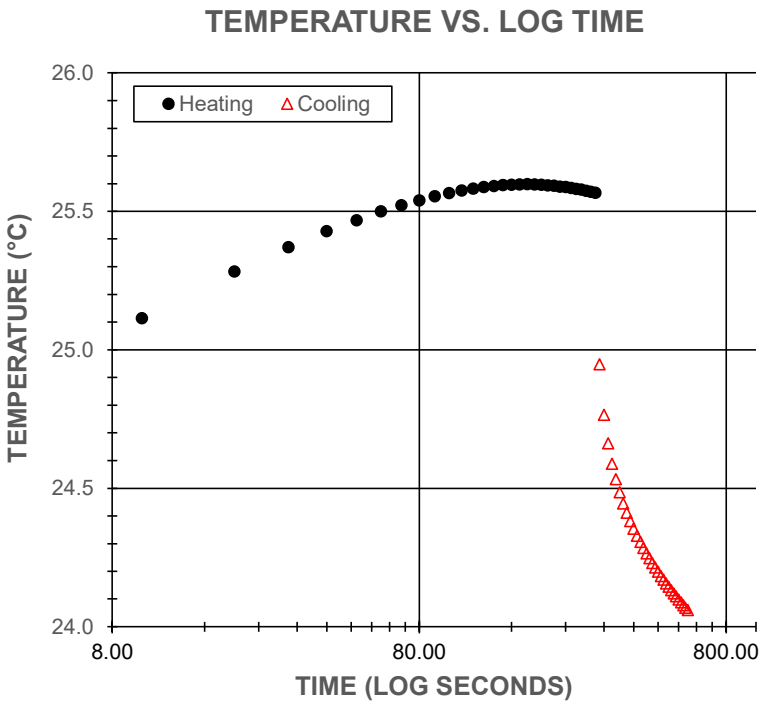

Tested By: JP & RR
Date: 4/21/2022

Input By: JP
Date: 4/21/2022

Reviewed By: PAT
Date: 8/24/2022

APPENDIX IV

EUSTIS
ENGINEERING
SINCE 1946

CONE PENETRATION
SOIL BEHAVIOR TYPE LEGEND



*OVERCONSOLIDATED OR CEMENTED

EUSTIS ENGINEERING SINCE 1946

Sewerage & Water Board of New Orleans
West Power Complex Project
Carrollton Water Plant
New Orleans, Louisiana

CONE PENETRATION TEST

SCPT-1

Project No: 24753
Date: 03/23/2022
Latitude: 29.96106°
Longitude: -90.13164°
CPT ID: DDG1068

Elevation: 3.5
Datum: NAVD88
Est. Water Depth: 0.0 ft
Total Depth: 45.9 ft
Operator: G. Reitmeyer

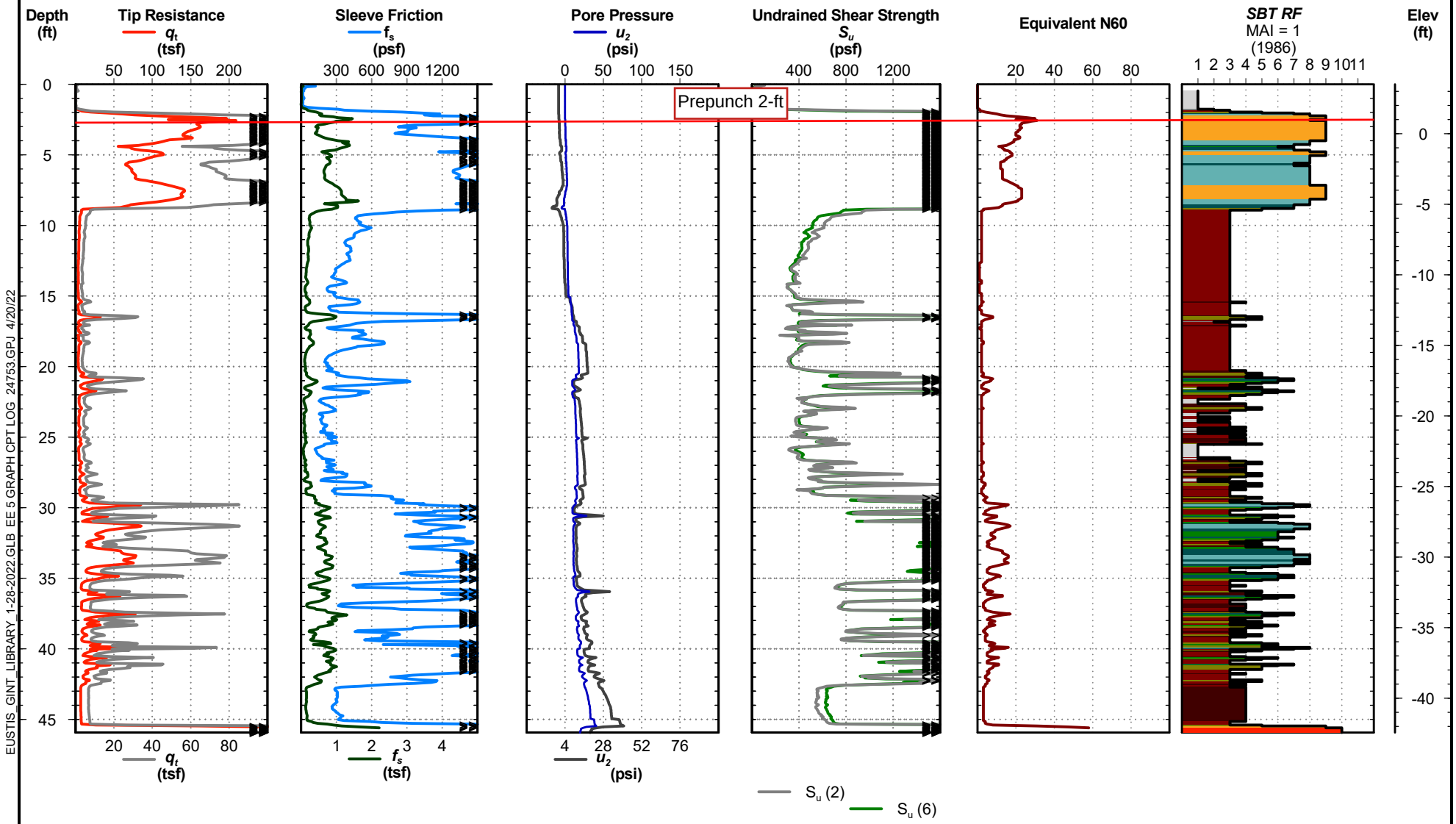

EUSTIS_GINT_LIBRARY_1-28-2022.GLB EE 5 GRAPH CPT LOG 24753.GPJ 4/20/22

Notes: Soil behavior type was determined using friction ratio classification chart (after Robertson*et al.*, 1986).
Test performed in general accordance with ASTM D5778-20.

EUSTIS ENGINEERING SINCE 1946

Sewerage & Water Board of New Orleans
West Power Complex Project
Carrollton Water Plant
New Orleans, Louisiana

CONE PENETRATION TEST

SCPT-1

Project No: 24753
Date: 03/23/2022
Latitude: 29.96106°
Longitude: -90.13164°
CPT ID: DDG1068

Elevation: 3.5
Datum: NAVD88
Est. Water Depth: 0.0 ft
Total Depth: 45.9 ft
Operator: G. Reitmeyer

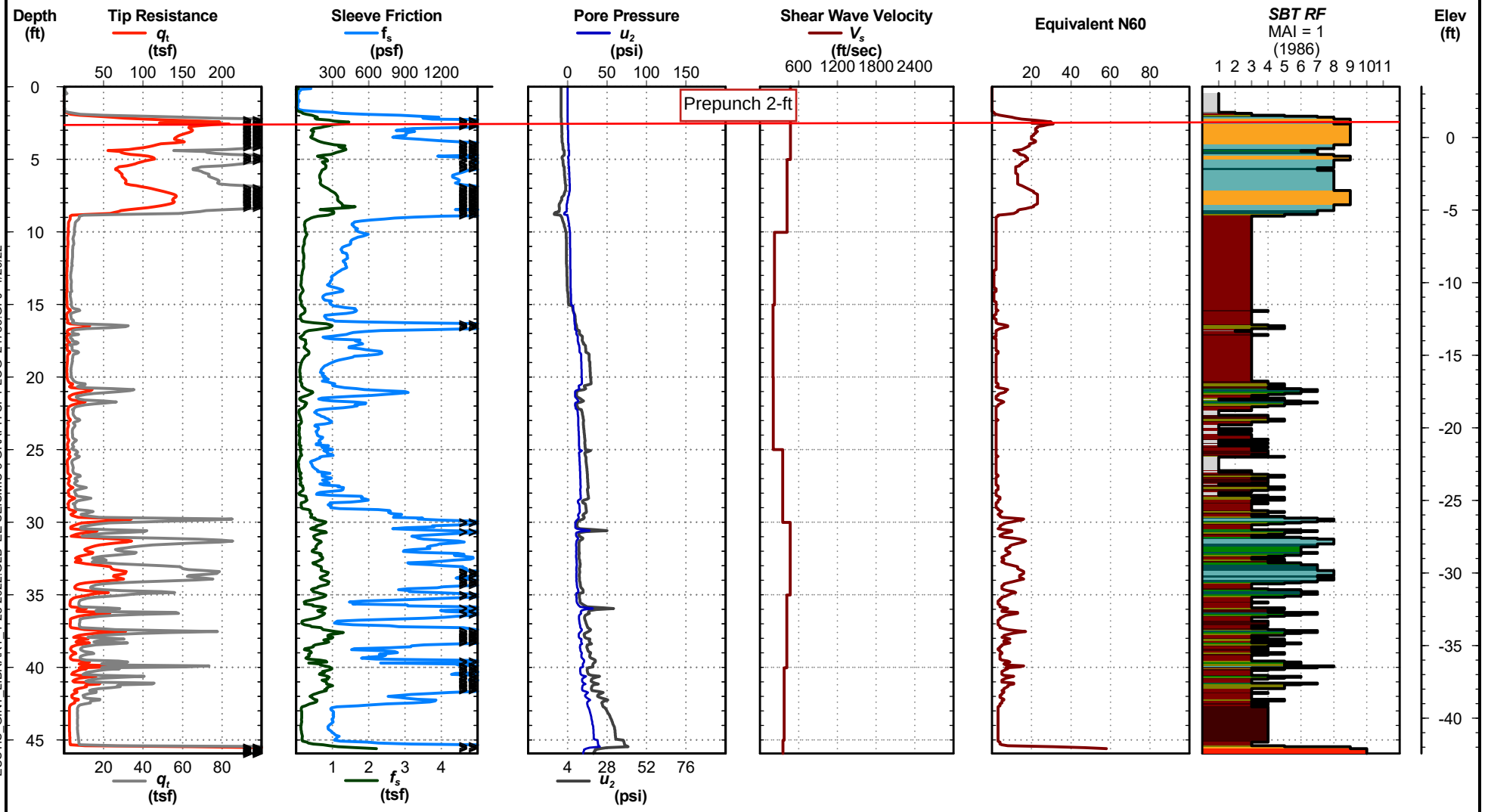

EUSTIS_GINT_LIBRARY_1-28-2022.GLB EE SEISMIC 5 GRAPH CPT LOG 24753.GPJ 4/20/22

Notes: Soil behavior type was determined using friction ratio classification chart (after Robertson *et al.*, 1986).
Test performed in general accordance with ASTM D5778-20.

CPT Correlations

References are in parenthesis next to the appropriate equation.

General

p_a=atmospheric pressure (for unit normalization)
q_t=corrected cone tip resistance (tsf)
f_s=friction sleeve resistance (tsf)
$R_f = 100\% \cdot (f_s/q_t)$
u_2=pore pressure behind cone tip (tsf)
u_0=hydrostatic pressure

$B_q = (u_2-u_0)/(q_t-\sigma_{vo})$
$Q_t=(q_t-\sigma_{vo})/ \sigma'_{vo}$
$F_r=100\% \cdot f_s/(q_t-\sigma_{vo})$
$I_c = ((3.47-\log Q_t)^2 + (\log F_r+1.22)^2)^{0.5}$ 2
$I_{SBT} = ((3.47-\log(q_c/p_a))^2+(\log F_r+1.22)^2)^{0.5}$ 23
$I_{c\ J\&D} = \sqrt{\{3 - \log(Q_t \cdot (1 - B_q)\}^2 + [1.5 + 1.3 \cdot \log(F_r)]^2}$ 27
$I_{c\ J\&B} = \sqrt{\{3 - \log(Q_t \cdot (1 - B_q) + 1\}^2 + [1.5 + 1.3 \cdot \log(F_r)]^2}$ 28

K_o

K_0 (1) $K_o = (1-\sin\varphi)OCR^{\sin\varphi}$
K_0 (2) $K_o = 0.1(Q_t)$ 1

Stress History

$OCR = \sigma_p'/\sigma'_{vo}$
OCR (1) $\sigma_p' = 0.33(q_t - \sigma_{vo})$ - clays 8
OCR (2) $\sigma_p' = 0.53(u_2 - u_o)$ - clays 9
OCR (3) $\sigma_p' = 0.60(q_t - u_2)$ - clays 9
OCR (4) $OCR = 0.25\ Q_t^{1.25}$ – clays 37
OCR (5) $OCR = \left[\frac{0.192*(q_t/p_a)^{0.22}}{(1-\sin(\emptyset')\cdot(\sigma'_{v0}/p_a{}^{0.31})}\right]^{\frac{1}{\sin(\emptyset'-0.27)}}$ – sands 35
OCR (6) $\sigma_p' = .101 \cdot p_a{}^{0.102} \cdot G_{max}{}^{0.478} \cdot \sigma'_{v0}{}^{0.420}$ – all soils 36

N-Value

$N_{60} = (q_t/p_a)/[8.5(1-I_c/4.6)]$ 6

Undrained Shear Strength

S_u (1) $S_u = (u_2 - u_o)/N_u$ where $7 \le N_u \le 9$ 10
S_u (2) $S_u = (q_t - \sigma_{vo})/N_{kT}$ where $15 \le N_{kT} \le 20$ 11
S_u (3) $S_u = 0.091 * ((\sigma'_{vo}{}^{0.2}) * (q_t - \sigma_{vo})^{0.8}$ 21
S_u (4) $S_u = (q_c - \sigma_{vo})/N_k$ where $15 \le N_k \le 20$ 11
S_u (5) $S_u = q_t/N_c$ where $XXX \le N_c \le YYY$
S_u (6) $S_u = q_c/N_c$ where $XXX \le N_c \le YYY$

Effective Cohesion

$c' = 0.02 * \sigma_p'$ 38

Drained Friction Angle

φ' (1)	$\varphi' = 17.6 + 11.0\text{Log}[q_t/(\sigma_{vo}')^{0.5}]$	1
φ' (2)	$\varphi' = \arctan[0.1 + 0.38\text{Log}(q_t/\sigma_{vo}')]$	13
φ' (3)	$\varphi' = 30.8\text{Log}[(f_s/\sigma_{vo}')+1.26]$ (for clays or sands)	14
φ' (4)	$\varphi' = 29.5\ B_q^{0.121}\ (0.256 + 0.33\ B_q + \text{Log}(Q_t))$	24

Unit Weight

$\rho = \gamma/\gamma_w$

$\rho = 0.8\text{Log}(V_s)$ V_s in m/sec 17

Relative Density and Void Ratio

D_R (1)	$D_R = 100(q_{c1}/305)^{1/2}$	where, $q_{c1} = q_c/(\sigma_{vo}')^{1/2}$	1
D_R (2)	$D_R = -1.292 + 0.268\ln(q_c \cdot (\sigma_{vo}'^{-0.5}))$		18
D_R (3)	$D_R = (1/2.41)\cdot\ln(q_{c1}/15.7)$		3
D_R (4)	$D_R = 1/2.91 * \ln((q_c/(61* \sigma'^{0.71}_{vo}))*100$		20
D_R (5)	$D_R = 100*(0.268*\ln((q_t/p_a)/(\sigma'_{vo}/p_a)\text{^}0.5) - 0.675)$		34

$e_o = 1.099 - 0.204\log(q_{c1})$ 1

$E_D = 5\ q_t$ $I_D = 2.0 - 0.14(R_f)$ $K_D = E_D/(34.7\cdot I_D\cdot \sigma_{vo}')$

Compressibility

$M(1) = R_m\ E_D$ where R_m= function(I_D, K_D) see the following table 22

$I_D <= 0.6$	$R_M = 0.14 + 2.36 \log K_D$
$I_D >= 3$	$R_M = 0.5 + 2 \log K_D$
$0.6 < I_D < 3$	$R_M = R_{M,D} + (2.5 - R_{M,D})\log K_D$
	$R_{M,D} = 0.14 + 0.15(I_D - 0.6)$
$K_D > 10$	$R_M = 0.32 + 2.18 \log K_D$
$R_M < 0.85$	$R_M = 0.85$

M (2)	$M = q_c\cdot 10^{(1.09-0.0075D}R^{)}$ *sands*	1
M (3)	$M = 8.25\ (q_t - \sigma_{vo})$ *clays*	1
M (4)	$M = \alpha \cdot G_{max}\ where\ 0.02 < \alpha < 2$ and $G_{max}\ is\ from\ Vs$	33

Rigidity Index

$I_R = exp\left[\left(\frac{1.5}{M} + 2.925\right)\cdot\left(\frac{q_t-\sigma_{vo}}{q_t-u_2}\right) - 2.925\right]$ where $M = 6\sin\emptyset'/(3-\sin\emptyset')$ 39

Sensitivity

S_t (1)	$S_t = 7.5/R_f$	2
S_t (2)	$S_t = (q_t - \sigma_{vo})/(15\cdot f_s)$	2

Fines Content

$FC = [(3.58-\log(q_t))^2+(1.43+\log(R_f))^2]^{1.8}$ 4

$FC = [5.31(I_{cfs})^{2.31}]+9.61$, where $I_{cfs} = [(1.95-\text{Log}Q_t)^2+(\log F_r+1.78)^2]^{0.5}$

Shear Wave Velocity

$V_s(1) = 277 \cdot q_t^{0.13} \cdot {\sigma'_{vo}}^{0.27}$ (sands) - m/s and MPa 29

$V_s(2) = 1.75 \cdot q_t^{0.627}$ (clays) - m/s and kPa 30

$V_s(3) = (10.1 \cdot \log q_t - 11.4)^{1.67} \cdot (\frac{f_s}{q_t} \cdot 100)^{0.3}$ (all soils) – m/s and kPa 31

$V_s(4) = 118.8 \cdot \log f_s + 18.5$ (all soils) – m/s and kPa 32

$G_{max} = \rho V_s^2$

Hydraulic Conductivity

Lookup based on SBT and SBTn (1986 and 1990) 40

Normalized Soil Behavior Types - Robertson & Campanella (1990)

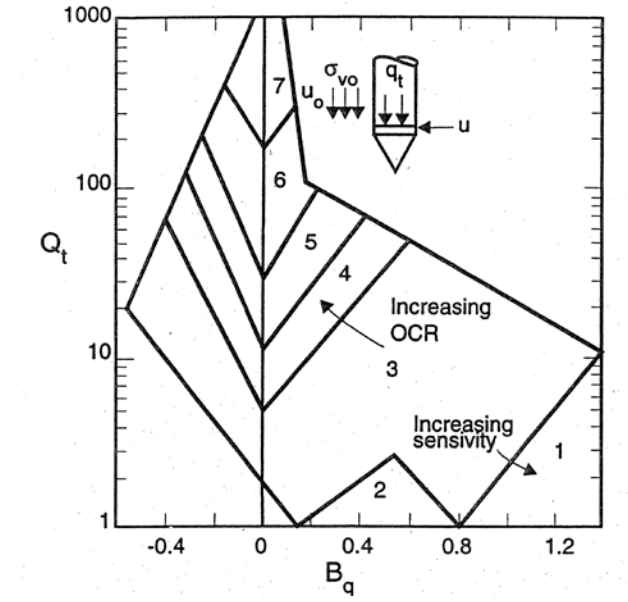

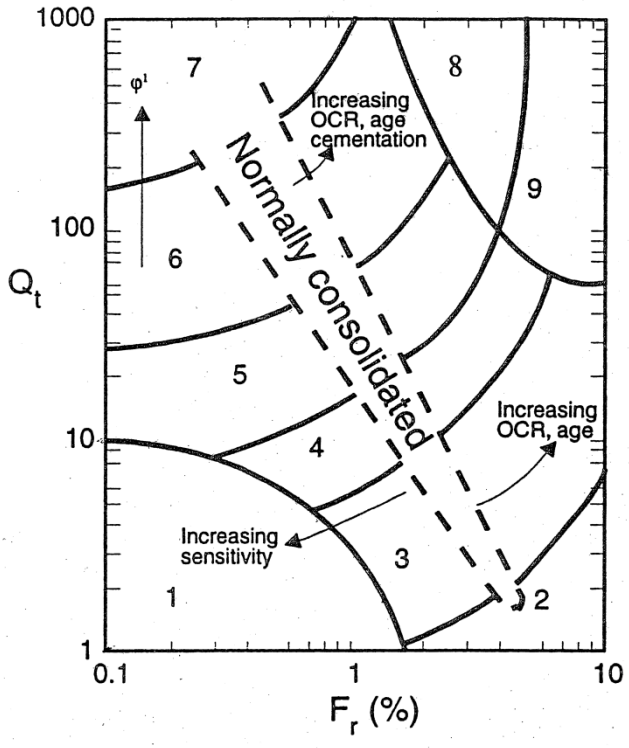

Non-Normalized Soil Behavior Types – Robertson & Campanella (1986)

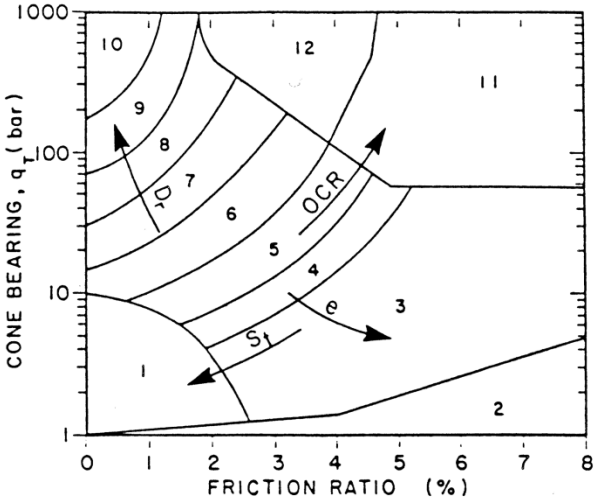

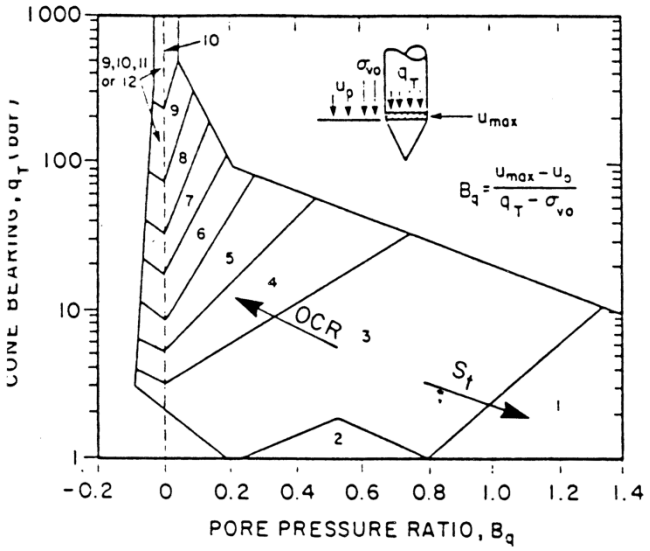

References

1. Kulhawy, F. H., and Mayne, P. W., (1990), "Manual for estimating soil properties for foundation design.", *Report EL-6800,* EPRI, Palo Alto, CA.
2. Lunne, T., Robertson, P.K., and Powell, J.J.M. (1997) Cone Penetration Testing in Geotechnical Practice
3. Baldi, G, Bellotti, R., Ghionna, V., Jamiolkowski, M. and Pasqualini, E. (1986), Interpretation of CPTs and CPTUs; 2nd part: drained penetration of sands, Proceedings of the 4th International Geotechnical Seminar, Singapore.
4. Syms, Frank (2001), Savannah River Site Bechtel Corporation, CPTU Fines Content Determination, Calculation No. K-CIC-G-00065 Revision 0.
5. Marchetti, S. (1980), "In-situ tests by flat dilatometer.", *Journal of Geotechnical Engineering*, Vol. 107, GT3
6 . Jefferies, M. G. and Davies, M. P., (1993), "Use of CPTu to estimate equivalent SPT N_{60}", *ASTM Geotechnical Testing Journal*, Vol. 16, No. 4
7. Robertson, P. K., Campanella, R. G., Gillespie, D. and Grieg, J. (1986), "Use of piezometers cone data". *Proceedings of the ASCE Specialty Conference In Situ '86: Use of In Situ Tests in Geotechnical Engineering*, Blacksburg, VA
8. Mayne, P. W., (1995), "Profiling yield stresses in clays by in situ tests.", *Transportation Research Record No. 1479: Engineering Properties and Practice in Overconsolidated Clays*. National Academy Press, Washington, D.C.
9. Chen, B. S. Y., and Mayne, P. W., (1996), "Statistical relationships between piezocone measurements and stress history of clays", *Canadian Geotechnical Journal*, Vol. 33, No. 3
10. Mayne, P. W. and Holtz, R. D., (1988), "Profiling stress history from piezocone soundings.", *Soils and Foundations*. Vol 28, No. 1
11. Aas, G., Lacasse, S., Lunne, T. and Höeg, K. (1986), "Use of in situ tests for foundation design on clay", *Proceedings of the ASCE Specialty Conference In Situ '86: Use of In Situ Tests in Geotechnical Engineering*, Blacksburg, VA
12. Schmertmann, J. H., (1988) Guidelines for Using the CPT, CPTu, and Marchetti DMT for Geotechnical Design: Volume III – DMT Test Methods and Data Reduction. FHWA-PA-87-024+84-24
13. Robertson, P. K., and Campanella, R. G., (1983), "Interpretation of cone penetrometer test: Part I: Sand". *Canadian Geotechnical Journal*, 20(4)
14. Masood & Mitchell (1993)
15. Robertson, P. K., and Campanella, R. G., (1991), "Use and interpretation of research Dilatometer". *Canadian Geotechnical Journal*, 28(1)
16. Marchetti, S. (1997), "The flat Dilatometer design applications", Third Geotechnical Engineering Conference, Cairo University
17. Mayne (1999) Course Notes
18. Jamiolkowski et al (1985)
19. Reyna & Chameau (1991)
20. Lunne & Christofferson (1983)
21. Wright, S. G, and Duncan, J. M. (2006), Notes for the Short Course "Shear Strength & Slope Stability"

22. Mayne, P.W. “Equivalent CPT Method for Calculating Shallow Foundation Settlements in the Piedmont Residual Soils Based on the DMT Constrained Modulus Approach.” http://geosystems.ce.gatech.edu/Faculty/Mayne/papers/

23. Robertson, P.K. (2010) “Soil behavior type from the CPT: an update” 2nd International Symposium on Cone Penetration Testing, Huntington Beach California

24. Mayne, P.W. and Campanella, R.G., “Versatile Site Characterization by Seismic Piezocone,” *Proceedings, 16th International Conference on Soil Mechanics and Geotechnical Engineering*, Vol. 2 (Osaka), Millpress, Rotterdam, The Netherlands, 2005, pp. 721–724.

25. Zhang Z. and Tumay, M. (1999) “Statistical to Fuzzy Approach Toward CPT Classification” *Journal of Geotechnical Engineering*, Vol. 125, No 3

26. Schneider et al. (2008) “Analysis of Factors Influencing Soil Classification Using Normalized Piezocone Tip Resistance and Pore Pressure Parameters” *Journal of Geotechnical Engineering*, November 2008

27. Jefferies, M.G. and M.P. Davies, “Use of CPTu to Estimate Equivalent SPT N60,” *Geotechnical Testing Journal*, Vol. 16, No. 4, Dec. 1993, pp. 458–468.

28. Jefferies, M. and Been, K. 2006. *Soil Liquefaction: A Critical State Approach*, Taylor and Francis Group, London: 480 p.

29. Baldi, G., R. Bellotti, V.N. Ghionna, M. Jamiolkowski, and D.C.F. LoPresti, “Modulus of Sands from CPTs and DMTs,” *Proceedings, 12th International Conference on Soil Mechanics and Foundation Engineering*, Vol. 1, Rio de Janeiro, Brazil, 1989, Balkema, Rotterdam, The Netherlands, pp. 165–170.

30. Mayne, P.W. and G.J. Rix, “Correlations Between Shear Wave Velocity and Cone Tip Resistance in Clays,” *Soils & Foundations*, Vol. 35, No. 2, 1995, pp. 107–110.

31. Hegazy, Y.A. and P.W. Mayne, “Statistical Correlations Between *Vs* and CPT Data for Different Soil Types,” *Proceedings, Symposium on Cone Penetration Testing*, Vol. 2, Swedish Geotechnical Society, Linköping, Sweden, 1995, pp. 173–178.

32. Mayne, P.W., “The 2nd James K. Mitchell Lecture: Undisturbed Sand Strength from Seismic Cone Tests,” *Geomechanics and Geoengineering*, Vol. 1, No. 4, 2006, pp. 239–247.

33. Burns, S.E. and P.W. Mayne, “Interpretation of Seismic Piezocone Results for the Evaluation of Hydraulic Conductivity in Clays,” *Geotechnical Testing Journal*, Vol. 25, No. 3, 2002b, pp. 333–340.

34. Jamiolkowski, M., D.C.F. LoPresti, and M. Manassero, “Evaluation of Relative Density and Shear Strength of Sands from Cone Penetration Test and Flat Dilatometer Test,” *Soil Behavior and Soft Ground Construction* (GSP 119), American Society of Civil Engineers, Reston, Va., 2001, pp. 201–238.

35. Mayne, P.W., “Integrated Ground Behavior: In-Situ and Lab Tests,” *Deformation Characteristics of Geomaterials*, Vol. 2 (Proc. Lyon, France), Taylor & Francis, London, United Kingdom, 2005, pp. 155–177.

36. Mayne, P.W. and D.A. Brown, “Site Characterization of Piedmont Residuum of North America,” *Characterization and Engineering Properties of Natural Soils*, Vol. 2, Swets and Zeitlinger, Lisse, The Netherlands, 2003, pp. 1323–1339.

37. Robertson, P.K. (2009) “Performance based earthquake deisng using the CPT”, Keynote lecture, IS-Tokyo

38. Mayne, P.W. and H.E. Stewart, “Pore Pressure Response of *K*0 Consolidated Clays,” *Journal of Geotechnical Engineering*, Vol. 114, No. 11, 1988, pp. 1340–1346.

39. Mayne, P.W., “Stress-Strain-Strength-Flow Parameters from Enhanced In-Situ Tests,” *Proceedings, International Conference on In-Situ Measurement of Soil Properties and Case Histories*, Bali, Indonesia, 2001, pp. 27–48.

40. Robertson, P.K. and Cabal, K.L. “Guide to Cone Penetration Testing for Geotechnical Engineering” Gregg Drilling & Testing, Inc. 2009 pp 41-42.

APPENDIX V

FIELD MEASUREMENT OF SOIL RESISTIVITY
USING THE WENNER FOUR-ELECTRODE METHOD

JOB TITLE:	Sewerage and Water Board of New Orleans			
JOB NO.	24753		TECHNICIAN:	M. Blasini
DATE:	3/21/2022	TIME:	9:00 AM	TEMP: 65
LOCATION:	RE-D			29.961176°, -90.131141°
INSTRUMENT:	Miller 400D digital resistance meter			

ELECTRODE SPACING "a" (FEET)	RECOMMENDED PENETRATION (INCHES) [<5% a]	ACTUAL PENETRATION (INCHES)	RESISTANCE (Ohms)	RESISTIVITY (Ohm-m)
1.25	0.75	3	170.00	406.96
2.5	1.5	3	103.00	493.14
5	3	3	45.33	434.01
7.5	4.5	3	16.80	241.30
10	6	3	7.81	149.62
15	9	3	2.33	66.79
20	12	8	0.66	25.28
25	15	8	0.33	15.80
30	18	8	0.23	13.21
40	24	8	0.15	11.49
50	30	8	0.19	18.19
60	36	8	0.16	18.39
80	48	8	0.09	13.79
90 DEGREE ROTATE				
1.25	0.75	3	146.25	350.11
2.5	1.5	3	94.08	450.41
5	3	3	41.40	396.43
7.5	4.5	3	18.50	265.72
10	6	3	9.50	181.98
15	9	3	6.45	185.22
20	12	8	0.88	33.71
25	15	8	0.31	14.84
30	18	8	0.22	12.64
40	24	8	0.17	13.02
50	30	8	0.25	23.94
60	36	8	0.19	21.83
80	48	8	0.16	24.51

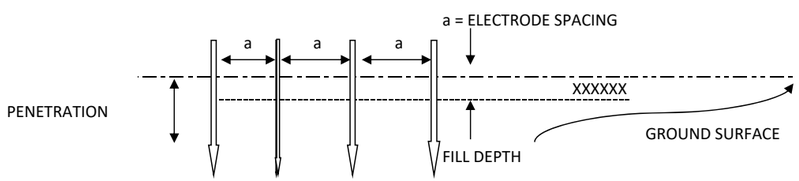

STANDARD VALUES FOR ELECTRICAL RESISTIVITY

Formation	Electrical resistivity range
Sea water	0.1 0.3 Ω m
Salted water	0.3 0.9 Ω m
Brackish water	0.9 5 Ω m
Leachate	0.9 5 Ω m
Fresh water	5 80 Ω m
Clay	5 30 Ω m
Wet sand	20 150 Ω m
Sandstone	30 300 Ω m
Limestone	100 800 Ω m
Dry sand	250 4000 Ω m
Granite	1000 20,000 Ω m

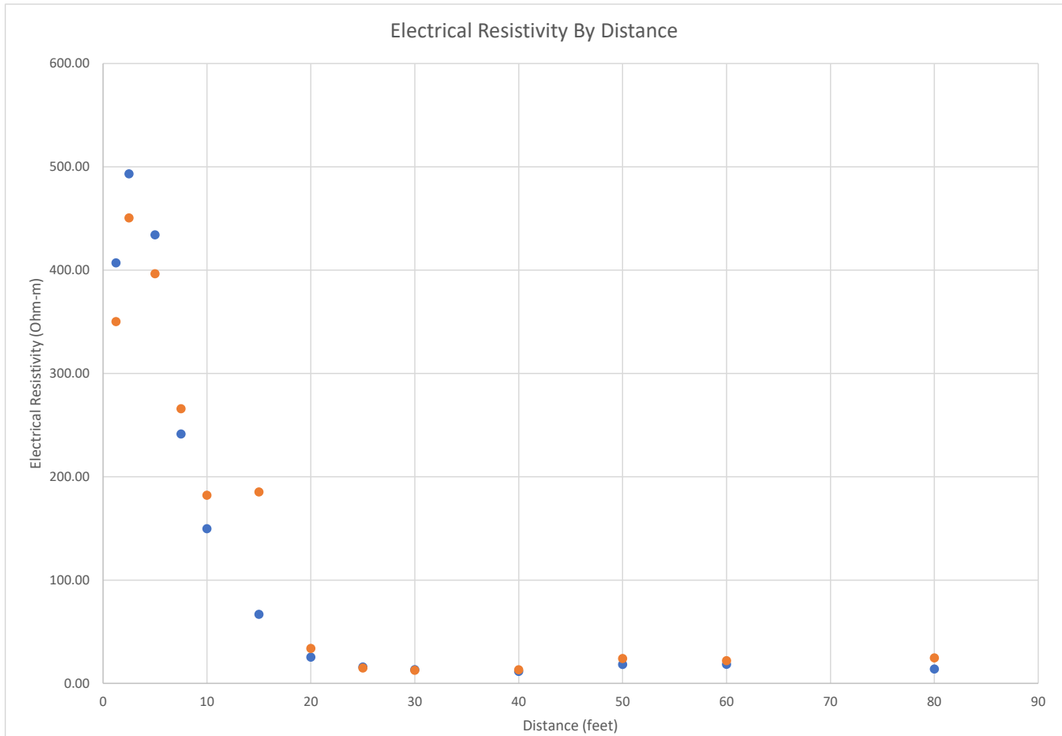

FIELD MEASUREMENT OF SOIL RESISTIVITY
USING THE WENNER FOUR-ELECTRODE METHOD

JOB TITLE:	Sewerage and Water Board of New Orleans			
JOB NO.	24753	TECHNICIAN:	M. Blasini	
DATE:	3/21/2022	TIME: 1:45 PM	TEMP:	75
LOCATION:	RE-C		29.961100°, -90.131550°	
INSTRUMENT:	Miller 400D digital resistance meter			

ELECTRODE SPACING "a" (FEET)	RECOMMENDED PENETRATION (INCHES) [<5% a]	ACTUAL PENETRATION (INCHES)	RESISTANCE (Ohms)	RESISTIVITY (Ohm-m)
1.25	0.75	3	167.00	399.78
2.5	1.5	3	108.00	517.08
5	3	3	49.15	470.64
7.5	4.5	3	23.60	338.98
10	6	3	12.00	229.81
15	9	3	3.25	93.36
20	12	3	1.39	53.24
25	15	3	1.08	51.59
30	18	3	0.90	51.85
40	24	3	0.54	41.56
5	3	3	0.52	5.00
60	36	3	0.75	86.18
80	48	3	0.33	50.56
90 DEGREE ROTATE				
1.25	0.75	3	151.75	363.27
2.5	1.5	3	111.00	531.44
5	3	3	51.89	496.85
7.5	4.5	3	23.90	343.28
10	6	3	11.08	212.10
15	9	3	2.78	79.86
20	12	3	0.94	35.81
25	15	3	0.44	20.83
30	18	3	0.38	21.98
40	24	3	0.25	19.15
50	30	3	0.23	21.78
60	36	3	0.37	42.52
80	48	3	0.37	57.07

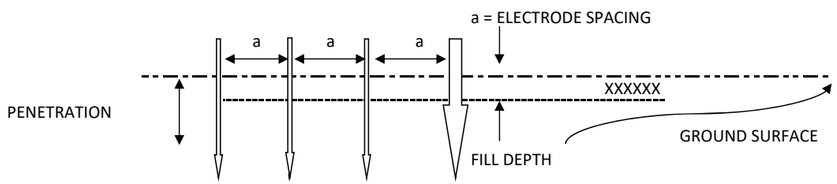

STANDARD VALUES FOR ELECTRICAL RESISTIVITY

Formation	Electrical resistivity range
Sea water	0.1 0.3 Ω m
Salted water	0.3 0.9 Ω m
Brackish water	0.9 5 Ω m
Leachate	0.9 5 Ω m
Fresh water	5 80 Ω m
Clay	5 30 Ω m
Wet sand	20 150 Ω m
Sandstone	30 300 Ω m
Limestone	100 800 Ω m
Dry sand	250 4000 Ω m
Granite	1000 20,000 Ω m

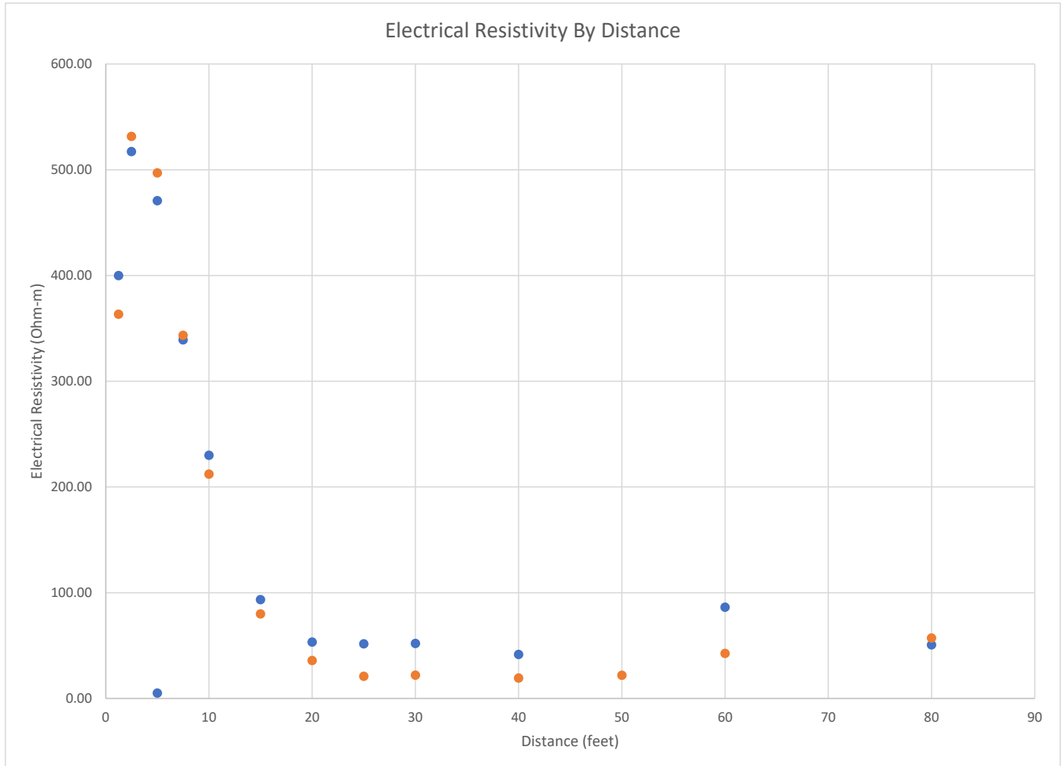

APPENDIX VI

Pace Analytical Services, LLC
1000 Riverbend Blvd - Suite F
St. Rose, LA 70087
(504)469-0333

April 06, 2022

Ryan Rodrigue
Eustis Engineering
3011 28th Street
Metairie, LA 70002

RE: Project: SWBNO-West Power/24753
Pace Project No.: 20238870

Dear Ryan Rodrigue:

Enclosed are the analytical results for sample(s) received by the laboratory on March 29, 2022. The results relate only to the samples included in this report. Results reported herein conform to the applicable TNI/NELAC Standards and the laboratory's Quality Manual, where applicable, unless otherwise noted in the body of the report.

Some analyses were subcontracted outside of the Pace Network. The test report from the external subcontractor is attached to this report in its entirety.

The test results provided in this final report were generated by each of the following laboratories within the Pace Network:

- Pace Analytical Services - New Orleans

If you have any questions concerning this report, please feel free to contact me.

Sincerely,

Karen Brown
karen.brown@pacelabs.com
(504)469-0333
Project Manager

Enclosures

cc: Eustis Project Manager, Eustis Engineering

Pace Analytical Services, LLC
1000 Riverbend Blvd - Suite F
St. Rose, LA 70087
(504)469-0333

CERTIFICATIONS

Project: SWBNO-West Power/24753
Pace Project No.: 20238870

Pace Analytical Services New Orleans

Florida Department of Health (NELAC): E87595
Illinois Environmental Protection Agency: 0025721
Kansas Department of Health and Environment (NELAC): E-10266
Louisiana Dept. of Environmental Quality (NELAC/LELAP): 02006
Texas Commission on Env. Quality (NELAC): T104704405-09-TX
U.S. Dept. of Agriculture Foreign Soil Import: P330-10-00119

This report shall not be reproduced, except in full,
without the written consent of Pace Analytical Services, LLC.

Pace Analytical Services, LLC
1000 Riverbend Blvd - Suite F
St. Rose, LA 70087
(504)469-0333

SAMPLE SUMMARY

Project: SWBNO-West Power/24753
Pace Project No.: 20238870

Lab ID	Sample ID	Matrix	Date Collected	Date Received
20238870001	**BH-2/PB-4**	Solid	03/28/22 00:00	03/29/22 12:30
20238870002	**BH-3/PB-2**	Solid	03/28/22 00:00	03/29/22 12:30

REPORT OF LABORATORY ANALYSIS

This report shall not be reproduced, except in full,
without the written consent of Pace Analytical Services, LLC.

Pace Analytical Services, LLC
1000 Riverbend Blvd - Suite F
St. Rose, LA 70087
(504)469-0333

SAMPLE ANALYTE COUNT

Project: SWBNO-West Power/24753
Pace Project No.: 20238870

Lab ID	Sample ID	Method	Analysts	Analytes Reported	Laboratory
20238870001	**BH-2/PB-4**	EPA 9045	JLH	1	PASI-N
		EPA 120.1 Resistivity	NTG	1	PASI-N
		EPA 9038	MHM	1	PASI-N
		EPA 9251	MHM	1	PASI-N
20238870002	**BH-3/PB-2**	EPA 9045	JLH	1	PASI-N
		EPA 120.1 Resistivity	NTG	1	PASI-N
		EPA 9038	MHM	1	PASI-N
		EPA 9251	MHM	1	PASI-N

PASI-N = Pace Analytical Services - New Orleans

This report shall not be reproduced, except in full,
without the written consent of Pace Analytical Services, LLC.

Pace Analytical Services, LLC
1000 Riverbend Blvd - Suite F
St. Rose, LA 70087
(504)469-0333

PROJECT NARRATIVE

Project: SWBNO-West Power/24753
Pace Project No.: 20238870

Method: **EPA 9045**
Description: 9045 pH Soil
Client: Eustis Engineering
Date: April 06, 2022

General Information:
2 samples were analyzed for EPA 9045 by Pace Analytical Services New Orleans. All samples were received in acceptable condition with any exceptions noted below or on the chain-of custody and/or the sample condition upon receipt form (SCUR) attached at the end of this report.

Hold Time:
The samples were analyzed within the method required hold times with any exceptions noted below.

Method Blank:
All analytes were below the report limit in the method blank, where applicable, with any exceptions noted below.

Laboratory Control Spike:
All laboratory control spike compounds were within QC limits with any exceptions noted below.

Matrix Spikes:
All percent recoveries and relative percent differences (RPDs) were within acceptance criteria with any exceptions noted below.

Duplicate Sample:
All duplicate sample results were within method acceptance criteria with any exceptions noted below.

Additional Comments:

This report shall not be reproduced, except in full,
without the written consent of Pace Analytical Services, LLC.

Pace Analytical Services, LLC
1000 Riverbend Blvd - Suite F
St. Rose, LA 70087
(504)469-0333

PROJECT NARRATIVE

Project: SWBNO-West Power/24753
Pace Project No.: 20238870

Method: **EPA 120.1 Resistivity**
Description: Resistivity
Client: Eustis Engineering
Date: April 06, 2022

General Information:
2 samples were analyzed for EPA 120.1 Resistivity by Pace Analytical Services New Orleans. All samples were received in acceptable condition with any exceptions noted below or on the chain-of custody and/or the sample condition upon receipt form (SCUR) attached at the end of this report.

Hold Time:
The samples were analyzed within the method required hold times with any exceptions noted below.

Method Blank:
All analytes were below the report limit in the method blank, where applicable, with any exceptions noted below.

Laboratory Control Spike:
All laboratory control spike compounds were within QC limits with any exceptions noted below.

Matrix Spikes:
All percent recoveries and relative percent differences (RPDs) were within acceptance criteria with any exceptions noted below.

Additional Comments:

This report shall not be reproduced, except in full,
without the written consent of Pace Analytical Services, LLC.

Pace Analytical Services, LLC
1000 Riverbend Blvd - Suite F
St. Rose, LA 70087
(504)469-0333

PROJECT NARRATIVE

Project: SWBNO-West Power/24753
Pace Project No.: 20238870

Method: **EPA 9038**
Description: 9038 Sulfate, Turbidimetric
Client: Eustis Engineering
Date: April 06, 2022

General Information:
2 samples were analyzed for EPA 9038 by Pace Analytical Services New Orleans. All samples were received in acceptable condition with any exceptions noted below or on the chain-of custody and/or the sample condition upon receipt form (SCUR) attached at the end of this report.

Hold Time:
The samples were analyzed within the method required hold times with any exceptions noted below.

Sample Preparation:
The samples were prepared in accordance with EPA 9038 with any exceptions noted below.

Method Blank:
All analytes were below the report limit in the method blank, where applicable, with any exceptions noted below.

Laboratory Control Spike:
All laboratory control spike compounds were within QC limits with any exceptions noted below.

Matrix Spikes:
All percent recoveries and relative percent differences (RPDs) were within acceptance criteria with any exceptions noted below.

Duplicate Sample:
All duplicate sample results were within method acceptance criteria with any exceptions noted below.

Additional Comments:

This report shall not be reproduced, except in full,
without the written consent of Pace Analytical Services, LLC.

Pace Analytical Services, LLC
1000 Riverbend Blvd - Suite F
St. Rose, LA 70087
(504)469-0333

PROJECT NARRATIVE

Project: SWBNO-West Power/24753
Pace Project No.: 20238870

Method: **EPA 9251**
Description: 9251 Chloride
Client: Eustis Engineering
Date: April 06, 2022

General Information:
2 samples were analyzed for EPA 9251 by Pace Analytical Services New Orleans. All samples were received in acceptable condition with any exceptions noted below or on the chain-of custody and/or the sample condition upon receipt form (SCUR) attached at the end of this report.

Hold Time:
The samples were analyzed within the method required hold times with any exceptions noted below.

Sample Preparation:
The samples were prepared in accordance with EPA 9251 with any exceptions noted below.

Method Blank:
All analytes were below the report limit in the method blank, where applicable, with any exceptions noted below.

Laboratory Control Spike:
All laboratory control spike compounds were within QC limits with any exceptions noted below.

Matrix Spikes:
All percent recoveries and relative percent differences (RPDs) were within acceptance criteria with any exceptions noted below.

Duplicate Sample:
All duplicate sample results were within method acceptance criteria with any exceptions noted below.

Additional Comments:

Analyte Comments:

QC Batch: 251637

D3: Sample was diluted due to the presence of high levels of non-target analytes or other matrix interference.

- BH-3/PB-2 (Lab ID: 20238870002)
  - Chloride
- DUP (Lab ID: 1195437)
  - Chloride
- MS (Lab ID: 1195438)
  - Chloride

This data package has been reviewed for quality and completeness and is approved for release.

This report shall not be reproduced, except in full,
without the written consent of Pace Analytical Services, LLC.

Pace Analytical Services, LLC
1000 Riverbend Blvd - Suite F
St. Rose, LA 70087
(504)469-0333

ANALYTICAL RESULTS

Project: SWBNO-West Power/24753
Pace Project No.: 20238870

Sample: BH-2/PB-4 **Lab ID: 20238870001** Collected: 03/28/22 00:00 Received: 03/29/22 12:30 Matrix: Solid

Results reported on a "wet-weight" basis

Parameters	Results	Units	Report Limit	DF	Prepared	Analyzed	CAS No.	Qual
9045 pH Soil	Analytical Method: EPA 9045 Pace Analytical Services - New Orleans							
pH at 25 Degrees C	**8.6**	Std. Units	0.010	1		04/04/22 17:04		
Resistivity	Analytical Method: EPA 120.1 Resistivity Pace Analytical Services - New Orleans							
Resistivity	**3120**	ohms-cm	0.50	1		04/06/22 08:48		
9038 Sulfate, Turbidimetric	Analytical Method: EPA 9038 Preparation Method: EPA 9038 Pace Analytical Services - New Orleans							
Sulfate	**7970**	mg/kg	2350	50	03/31/22 12:01	04/01/22 11:27	14808-79-8	
9251 Chloride	Analytical Method: EPA 9251 Preparation Method: EPA 9251 Pace Analytical Services - New Orleans							
Chloride	**388**	mg/kg	94.2	10	03/31/22 12:01	04/01/22 11:09	16887-00-6	

Sample: BH-3/PB-2 **Lab ID: 20238870002** Collected: 03/28/22 00:00 Received: 03/29/22 12:30 Matrix: Solid

Results reported on a "wet-weight" basis

Parameters	Results	Units	Report Limit	DF	Prepared	Analyzed	CAS No.	Qual
9045 pH Soil	Analytical Method: EPA 9045 Pace Analytical Services - New Orleans							
pH at 25 Degrees C	**10.2**	Std. Units	0.010	1		04/04/22 17:05		
Resistivity	Analytical Method: EPA 120.1 Resistivity Pace Analytical Services - New Orleans							
Resistivity	**4150**	ohms-cm	0.50	1		04/06/22 08:48		
9038 Sulfate, Turbidimetric	Analytical Method: EPA 9038 Preparation Method: EPA 9038 Pace Analytical Services - New Orleans							
Sulfate	ND	mg/kg	481	10	03/31/22 12:01	04/01/22 11:15	14808-79-8	
9251 Chloride	Analytical Method: EPA 9251 Preparation Method: EPA 9251 Pace Analytical Services - New Orleans							
Chloride	ND	mg/kg	96.1	10	03/31/22 12:01	04/01/22 11:09	16887-00-6	D3

REPORT OF LABORATORY ANALYSIS

This report shall not be reproduced, except in full,
without the written consent of Pace Analytical Services, LLC.

Pace Analytical Services, LLC
1000 Riverbend Blvd - Suite F
St. Rose, LA 70087
(504)469-0333

QUALITY CONTROL DATA

Project: SWBNO-West Power/24753
Pace Project No.: 20238870

QC Batch: 251709
QC Batch Method: EPA 9045
Analysis Method: EPA 9045
Analysis Description: 9045 pH
Laboratory: Pace Analytical Services - New Orleans

Associated Lab Samples: 20238870001, 20238870002

LABORATORY CONTROL SAMPLE: 1195859

Parameter	Units	Spike Conc.	LCS Result	LCS % Rec	% Rec Limits	Qualifiers
pH at 25 Degrees C	Std. Units	6	6.0	101	97-103	

SAMPLE DUPLICATE: 1195860

Parameter	Units	20237642001 Result	Dup Result	RPD	Max RPD	Qualifiers
pH at 25 Degrees C	Std. Units	3.9	3.8	2	20	

Results presented on this page are in the units indicated by the "Units" column except where an alternate unit is presented to the right of the result.

REPORT OF LABORATORY ANALYSIS

This report shall not be reproduced, except in full,
without the written consent of Pace Analytical Services, LLC.

Pace Analytical Services, LLC
1000 Riverbend Blvd - Suite F
St. Rose, LA 70087
(504)469-0333

QUALITY CONTROL DATA

Project: SWBNO-West Power/24753
Pace Project No.: 20238870

QC Batch: 251611
QC Batch Method: EPA 9038
Analysis Method: EPA 9038
Analysis Description: 9038 Sulfate, Turbidimetric
Laboratory: Pace Analytical Services - New Orleans
Associated Lab Samples: 20238870001, 20238870002

METHOD BLANK: 1195282 Matrix: Solid
Associated Lab Samples: 20238870001, 20238870002

Parameter	Units	Blank Result	Reporting Limit	Analyzed	Qualifiers
Sulfate	mg/kg	ND	50.0	04/01/22 11:01	

LABORATORY CONTROL SAMPLE: 1195283

Parameter	Units	Spike Conc.	LCS Result	LCS % Rec	% Rec Limits	Qualifiers
Sulfate	mg/kg	200	218	109	90-110	

MATRIX SPIKE SAMPLE: 1195285

Parameter	Units	20239084006 Result	Spike Conc.	MS Result	MS % Rec	% Rec Limits	Qualifiers
Sulfate	mg/kg	11100	485	11600	93	75-125	

SAMPLE DUPLICATE: 1195284

Parameter	Units	20239084006 Result	Dup Result	RPD	Max RPD	Qualifiers
Sulfate	mg/kg	11100	11100	1	20	

Results presented on this page are in the units indicated by the "Units" column except where an alternate unit is presented to the right of the result.

REPORT OF LABORATORY ANALYSIS

This report shall not be reproduced, except in full,
without the written consent of Pace Analytical Services, LLC.

Pace Analytical Services, LLC
1000 Riverbend Blvd - Suite F
St. Rose, LA 70087
(504)469-0333

QUALITY CONTROL DATA

Project: SWBNO-West Power/24753
Pace Project No.: 20238870

QC Batch: 251637
QC Batch Method: EPA 9251
Analysis Method: EPA 9251
Analysis Description: 9251 Chloride
Laboratory: Pace Analytical Services - New Orleans
Associated Lab Samples: 20238870001, 20238870002

METHOD BLANK: 1195435 Matrix: Solid
Associated Lab Samples: 20238870001, 20238870002

Parameter	Units	Blank Result	Reporting Limit	Analyzed	Qualifiers
Chloride	mg/kg	ND	10.0	04/01/22 11:09	

LABORATORY CONTROL SAMPLE: 1195436

Parameter	Units	Spike Conc.	LCS Result	LCS % Rec	% Rec Limits	Qualifiers
Chloride	mg/kg	577	551	96	90-110	

MATRIX SPIKE SAMPLE: 1195438

Parameter	Units	20238870002 Result	Spike Conc.	MS Result	MS % Rec	% Rec Limits	Qualifiers
Chloride	mg/kg	ND	9450	8760	92	75-125	D3

SAMPLE DUPLICATE: 1195437

Parameter	Units	20238870002 Result	Dup Result	RPD	Max RPD	Qualifiers
Chloride	mg/kg	ND	ND		20	D3

Results presented on this page are in the units indicated by the "Units" column except where an alternate unit is presented to the right of the result.

REPORT OF LABORATORY ANALYSIS

This report shall not be reproduced, except in full,
without the written consent of Pace Analytical Services, LLC.

Pace Analytical Services, LLC
1000 Riverbend Blvd - Suite F
St. Rose, LA 70087
(504)469-0333

QUALIFIERS

Project: SWBNO-West Power/24753
Pace Project No.: 20238870

DEFINITIONS

DF - Dilution Factor, if reported, represents the factor applied to the reported data due to dilution of the sample aliquot.

ND - Not Detected at or above adjusted reporting limit.

TNTC - Too Numerous To Count

J - Estimated concentration above the adjusted method detection limit and below the adjusted reporting limit.

MDL - Adjusted Method Detection Limit.

PQL - Practical Quantitation Limit.

RL - Reporting Limit - The lowest concentration value that meets project requirements for quantitative data with known precision and bias for a specific analyte in a specific matrix.

S - Surrogate

1,2-Diphenylhydrazine decomposes to and cannot be separated from Azobenzene using Method 8270. The result for each analyte is a combined concentration.

Consistent with EPA guidelines, unrounded data are displayed and have been used to calculate % recovery and RPD values.

LCS(D) - Laboratory Control Sample (Duplicate)

MS(D) - Matrix Spike (Duplicate)

DUP - Sample Duplicate

RPD - Relative Percent Difference

NC - Not Calculable.

SG - Silica Gel - Clean-Up

U - Indicates the compound was analyzed for, but not detected.

N-Nitrosodiphenylamine decomposes and cannot be separated from Diphenylamine using Method 8270. The result reported for each analyte is a combined concentration.

Reported results are not rounded until the final step prior to reporting. Therefore, calculated parameters that are typically reported as "Total" may vary slightly from the sum of the reported component parameters.

Pace Analytical is TNI accredited. Contact your Pace PM for the current list of accredited analytes.

TNI - The Nelac Institute

ANALYTE QUALIFIERS

D3	Sample was diluted due to the presence of high levels of non-target analytes or other matrix interference.

This report shall not be reproduced, except in full,
without the written consent of Pace Analytical Services, LLC.

Pace Analytical Services, LLC
1000 Riverbend Blvd - Suite F
St. Rose, LA 70087
(504)469-0333

QUALITY CONTROL DATA CROSS REFERENCE TABLE

Project: SWBNO-West Power/24753
Pace Project No.: 20238870

Lab ID	Sample ID	QC Batch Method	QC Batch	Analytical Method	Analytical Batch
20238870001	**BH-2/PB-4**	EPA 9045	251709		
20238870002	**BH-3/PB-2**	EPA 9045	251709		
20238870001	**BH-2/PB-4**	EPA 120.1 Resistivity	252018		
20238870002	**BH-3/PB-2**	EPA 120.1 Resistivity	252018		
20238870001	**BH-2/PB-4**	EPA 9038	251611	EPA 9038	251635
20238870002	**BH-3/PB-2**	EPA 9038	251611	EPA 9038	251635
20238870001	**BH-2/PB-4**	EPA 9251	251637	EPA 9251	251639
20238870002	**BH-3/PB-2**	EPA 9251	251637	EPA 9251	251639

This report shall not be reproduced, except in full,
without the written consent of Pace Analytical Services, LLC.

EUSTIS
ENGINEERING L.L.C.
SINCE 1946

WO# : 20238870

20238870

ain of Custody Record

Project No.	Project Name	Project Location
24753	SWBNO-West Power	

Sample No./ Identification	Date and Time	Grab	Comp	Type Sample/ Container (Size/No.)	PRESERVATION		ANALYSIS REQUESTED		LABORATORY REMARKS
					Chemicals Added	Iced	TEST	METHOD	
BH-2/PB-4	3/28/22						Chloride pH, Resistivity, Sulfate		
BH-3/PB-2	3/28/22						"		

Samplers: (Signature)	Relinquished by: (Signature)	Date: 3/29/22 Time: 12:30	Received by: (Signature)	Date: 3/29/22 Time: 12:30	Intact
					Yes AMB°
Affiliation:	Relinquished by: (Signature)	Date: Time:	Received by: (Signature)	Date: Time:	Intact
	Relinquished by: (Signature)	Date: Time:	Received by: (Signature)	Date: Time:	Intact

REMARKS:

WO#: 20238870

Pace Analytical

1000 Riverbend. Blvd., Suite F
St. Rose, LA 70087

Sample Condition Upor

PM: KHB Due Date: 04/08/22
CLIENT: 20-EUSTIS

PI

Courier: ☐ Pace Courier ☐ Hired Courier ☐ Fed X ☐ UPS ☐ DHL ☐ USPS ☑ Customer ☐ Other

Custody Seal on Cooler/Box Present: [see COC] **Custody Seals intact:** ☐Yes ☐No

Therometer Used: ☐ Therm Fisher IR 7 ☐ Therm Fisher IR 10

Type of Ice: Wet Blue (None) Samples on ice: [see COC]

Cooler Temperature: [see COC] Temp should be above freezing to 6°C

Date and Initials of person examining contents: 3-29-22

Temp must be measured from Temperature blank when present

			Comments:
Temperature Blank Present"?	☐Yes	☐No ☐N/A	1
Chain of Custody Present:	☑Yes	☐No ☐N/A	2
Chain of Custody Complete:	☑Yes	☐No ☐N/A	3
Chain of Custody Relinquished:	☑Yes	☐No ☐N/A	4
Sampler Name & Signature on COC:	☑Yes	☐No ☐N/A	5
Samples Arrived within Hold Time:	☑Yes	☐No ☐N/A	6
Sufficient Volume:	☑Yes	☐No ☐N/A	7
Correct Containers Used:	☑Yes	☐No ☐N/A	8
Filtered vol. Rec. for Diss. tests	☐Yes	☐No ☑N/A	9
Sample Labels match COC:	☑Yes	☐No ☐N/A	10
All containers received within manafacture's precautionary and/or expiration dates.	☐Yes	☐No ☑N/A	11 Zip lock bags
All containers needing chemical preservation have been checked (except VOA, coliform, & O&G).	☐Yes	☐No ☑N/A	12
All containers preservation checked found to be in compliance with EPA recommendation.	☐Yes	☐No ☑N/A	13 If No, was preserative added? ☐Yes ☐No If added record lot no.: HNO3 _____ H2SO4 _____
Headspace in VOA Vials (>6mm):	☐Yes	☐No ☑N/A	14
Trip Blank Present:	☐Yes	☐No	15

Client Notification/ Resolution:

Person Contacted: Date/Time:

Comments/ Resolution:

EASI Job Number: 61093

Laboratory Report prepared for:

PACE ANALYTICAL NEW ORLEANS
1000 Riverbend Blvd
Suite F
St. Rose, LA 70087
Attention: Ms. Karen Brown

Workorder Name: SWBNO-West Power/24753

Report Narrative

On March 29, 2022 two (2) samples were received for analytical characterization. Sample results are shown on the following pages. The chain of custody and the quality assurance / quality control data is attached to the report. If you have any questions regarding this report, please contact me at your convenience.

APPROVED BY: _____ DATE: 04/05/22

Michael Antoine
Laboratory Director

The results contained within this report relate only to the analyses conducted and to the samples received by the laboratory. The results also conform to current requirements of LAC 33:1, AIHA and NELAC unless noted. This report shall not be reproduced, except in full, without written approval of EASI, LLC. EASI, LLC is accredited by the American Industrial Hygiene Association, **AIHA Lab number 102300**, and the Louisiana Department of Environmental Quality, **LELAP Certificate number 02036.**

NOTE: This report is intended only for the use of the individual to whom it is addressed and may contain information that is privileged and/or confidential. If this report was received via facsimile or e-mail and the reader is not the intended recipient or the employee responsible for delivering the report to the intended recipient, you are hereby notified that any dissemination, distribution, or copying of this document is

Laboratory Report

Sample Identification: 20238870001 - BH-2/PB-4
Sample Date: March 28, 2022
Sample Time: 0000
Laboratory Number: 6109301
Matrix: Water

Analysis Parameter	Analysis Result	Analysis Units	PQL	Method	Analysis Date & Time	By
Specific Conductance	321	mg/l	1.0	120.1	040122/1430	KH

Sample Identification: 20238870002 - BH-3/PB-2
Sample Date: March 28, 2022
Sample Time: 0000
Laboratory Number: 6109302
Matrix: Water

Analysis Parameter	Analysis Result	Analysis Units	PQL	Method	Analysis Date & Time	By
Specific Conductance	241	mg/l	1.0	120.1	040122/1430	KH

Reference: Methods for Chemical Analysis of Water and Wastes, EPA 600/4-79-020.

Quality Assurance / Quality Control

Parameter	QC Batch ID	Method Blank Result	Spike Added, mg/l	LCS % Recovery
Specific Conductance	040122	BQL	1413	100

PQL - Practical Quantitation Limit

BQL - Below Quantitation Limit

Chain of Custody

PASI New Orleans Laboratory

61 093

Pace Analytical®
www.pacelabs.com

Workorder: 20238870 **Workorder Name:** SWBNO-West Power/24753 **Results Requested By:** 4/8/2022

Report / Invoice To	Subcontract To
Karen Brown Pace Analytical New Orleans 1000 Riverbend Blvd Suite F St. Rose, LA 70087 Phone (504)469-0333 Email: karen.brown@pacelabs.com	P.O. 20238870 EAS1

State of Sample Origin: LA

Item	Sample ID	Collect Date/Time	Lab ID	Matrix	Preserved Containers: Unpreserved	Requested Analysis: Resistivity	LAB USE ONLY
1	BH-2/PB-4	3/28/2022 00:00	20238870001	Solid	1	X	
2	BH-3/PB-2	3/28/2022 00:00	20238870002	Solid	1	X	
3							
4							
5							

Transfers	Released By	Date/Time	Received By	Date/Time
1	[signature] / Pace	3-29-22	[signature]	1450
2				
3				

Comments

Cooler Temperature on Receipt °C | **Custody Seal** Y or N | **Received on Ice** Y or N | **Samples Intact** Y or N

APPENDIX VII

Elevation Record for C8 Settlement Plates

	PLATE NO. 1			PLATE NO. 2			PLATE NO. 3			PLATE NO. 4		
GPS Northing	533871.362			533692.045			533583.046			533708.79		
GPS Easting	3661575.734			3661798.115			3661732.934			3661501.475		
Date	Plate Elev.	Fill Elev.	Fill Type	Plate Elev.	Fill Elev.	Fill Type	Plate Elev.	Fill Elev.	Fill Type	Plate Elev.	Fill Elev.	Fill Type
08/17/21	6.24	-1.53	Sand	7.24	-1.35	Sand	6.85	-1.67	Sand	7.21	-1.08	Sand
08/24/21	6.22	0.03	Sand	7.24	0.08	Sand	6.85	-0.72	Sand	7.21	0.12	Sand
08/31/21	Hurricane Ida											
09/07/21	6.21	-0.01	Sand	7.24	0.03	Sand	6.81	0.1	Sand	7.21	0.6	LWA
09/14/21	6.21	0.83	LWA	7.24	0.01	Sand	6.8	0.04	Sand	7.21	2.86	LWA
09/21/21	6.19	2.09	LWA	7.24	0.00	Sand	6.8	0.01	Sand	7.21	2.81	LWA
09/28/21	6.19	2.08	LWA	7.24	0.01	Sand	6.8	0	Sand	7.21	2.82	LWA
10/05/21	6.19	1.99	LWA	7.24	0.08	Sand	6.8	0.12	Sand	7.21	3.69	610
10/12/21	6.19	2.03	LWA	7.24	0.49	Sand	6.8	0.27	Sand	7.21	3.69	610
10/19/21	6.18	2.21	LWA	7.24	0.61	LWA	6.79	2.69	LWA	7.21	3.83	610
10/26/21	6.15	3.05	LWA	7.24	3.60	LWA	6.78	2.84	LWA	7.21	3.55	610
11/02/21	6.15	3.02	LWA	7.24	3.56	LWA	6.78	2.81	LWA	7.21	3.67	610
11/09/21	6.15	3.03	LWA	7.24	3.71	LWA	6.78	2.99	LWA	7.21	3.69	610
11/19/21	6.15	2.98	LWA	7.24	3.57	LWA	6.69	2.69	LWA	7.21	3.51	610
12/06/21	6.13	3.04	LWA	7.24	3.54	LWA	6.66	2.69	LWA	7.21	3.51	610
12/16/21	6.13	3.05	LWA	7.24	3.56	LWA	6.66	4.23	610	7.2	3.57	610
12/28/21	6.13	3.63	610	7.24	3.91	610	6.66	3.91	610	7.2	4.1	610
01/06/22	6.13	3.05	610	7.24	4.68	610	6.66	3.83	610	7.2	3.65	610
02/08/22	6.11	3.00	610	7.22	4.63	610	6.64	3.72	610	7.19	3.58	610
02/21/22	6.11	2.98	610	7.2	4.50	610	6.63	3.62	610	7.18	3.61	610
03/02/22	6.11	3.02	610	7.2	4.50	610	6.63	3.69	610	7.18	3.63	610
03/08/22	6.11	3.03	610	7.19	4.51	610	6.63	3.65	610	7.18	3.69	610
03/15/22	6.11	3.05	610	7.19	4.52	610	6.63	3.6	610	7.18	3.61	610
03/22/22	6.11	3.04	610	7.19	4.53	610	6.63	3.65	610	7.18	3.49	610

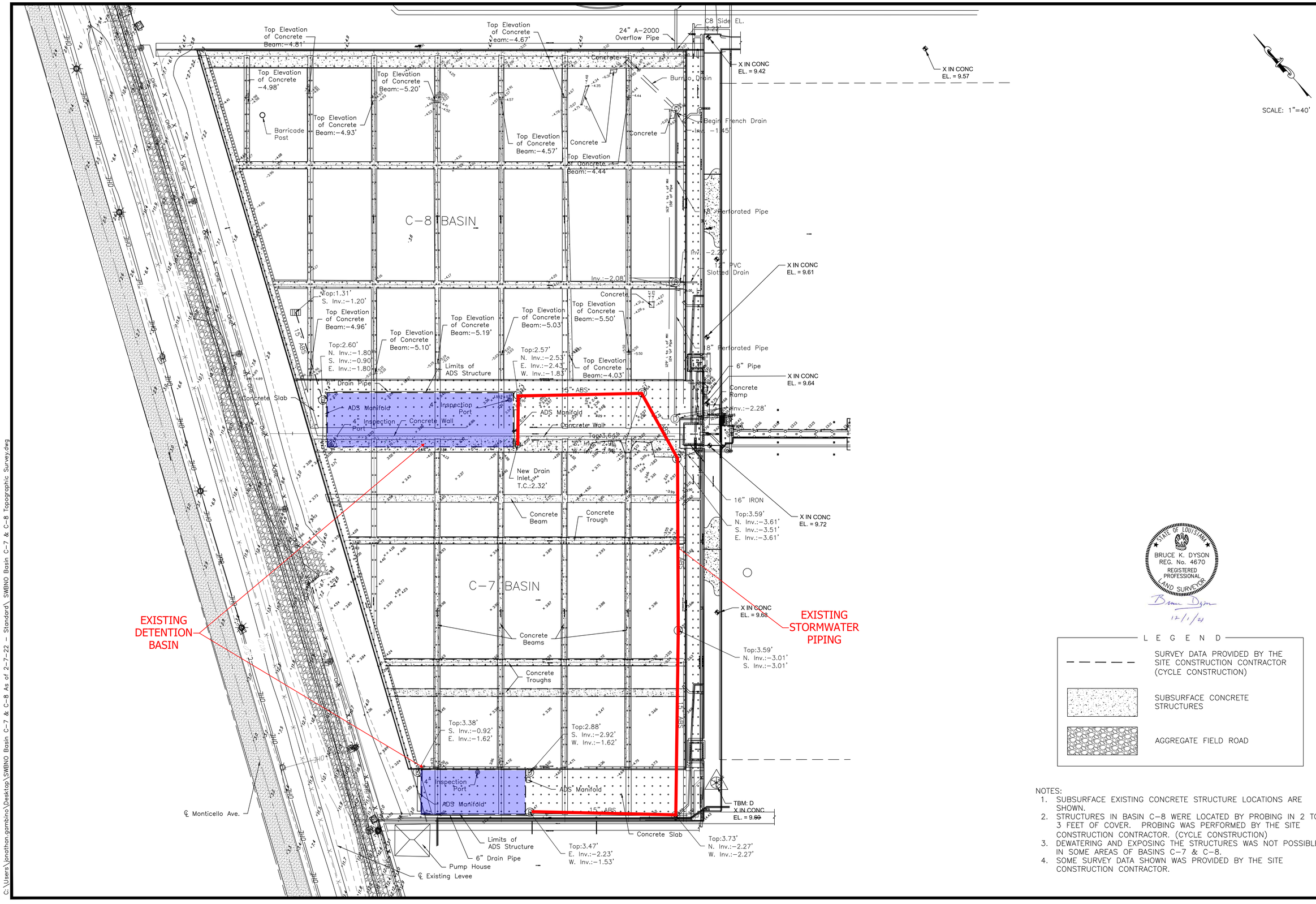

C:\Users\jonathan.gombino\Desktop\SWBNO Basin C-7 & C-8 As of 2-7-22 - Standard\ SWBNO Basin C-7 & C-8 Topographic Survey.dwg

Project No.: 773 | Sheet No.:

SEWERAGE & WATER BOARD N.O.
BASIN C-7 & C-8
TOPOGRAPHIC SURVEY

NO.	DATE	REVISIONS

STATE OF LOUISIANA
BRUCE K. DYSON
REG. No. 4670
REGISTERED PROFESSIONAL LAND SURVEYOR
12/1/21

L E G E N D

- SURVEY DATA PROVIDED BY THE SITE CONSTRUCTION CONTRACTOR (CYCLE CONSTRUCTION)
- SUBSURFACE CONCRETE STRUCTURES
- AGGREGATE FIELD ROAD

NOTES:
1. SUBSURFACE EXISTING CONCRETE STRUCTURE LOCATIONS ARE SHOWN.
2. STRUCTURES IN BASIN C-8 WERE LOCATED BY PROBING IN 2 TO 3 FEET OF COVER. PROBING WAS PERFORMED BY THE SITE CONSTRUCTION CONTRACTOR. (CYCLE CONSTRUCTION)
3. DEWATERING AND EXPOSING THE STRUCTURES WAS NOT POSSIBLE IN SOME AREAS OF BASINS C-7 & C-8.
4. SOME SURVEY DATA SHOWN WAS PROVIDED BY THE SITE CONSTRUCTION CONTRACTOR.

C. GOTECH, INC.
CONSULTING ENGINEERS | 8383 BLUEBONNET BLVD. | BATON ROUGE, LA. 70810
PHONE: (225)766-5358 | FAX: (225)766-5879

DESIGNED:	BKD
DRAWN:	SDM
CHECKED:	RAP
APPROVED:	BKD
SCALE:	1" = 40'
DATE:	DEC 1, 2021

APPENDIX VIII

ASCE 7 Hazards Report

Address:
No Address at This Location

Standard:	ASCE/SEI 7-10	**Elevation:**	-2.97 ft (NAVD 88)
Risk Category:	IV	**Latitude:**	29.961565
Soil Class:	E - Soft Clay Soil	**Longitude:**	-90.131034

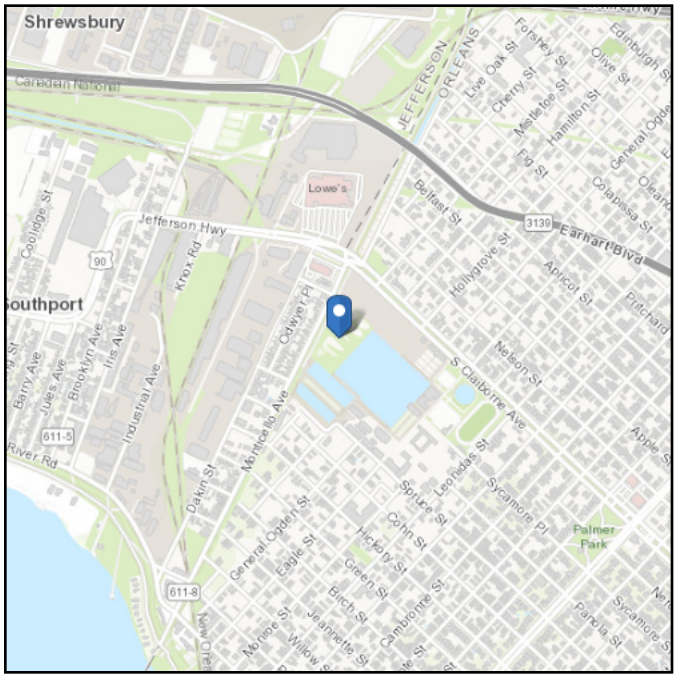

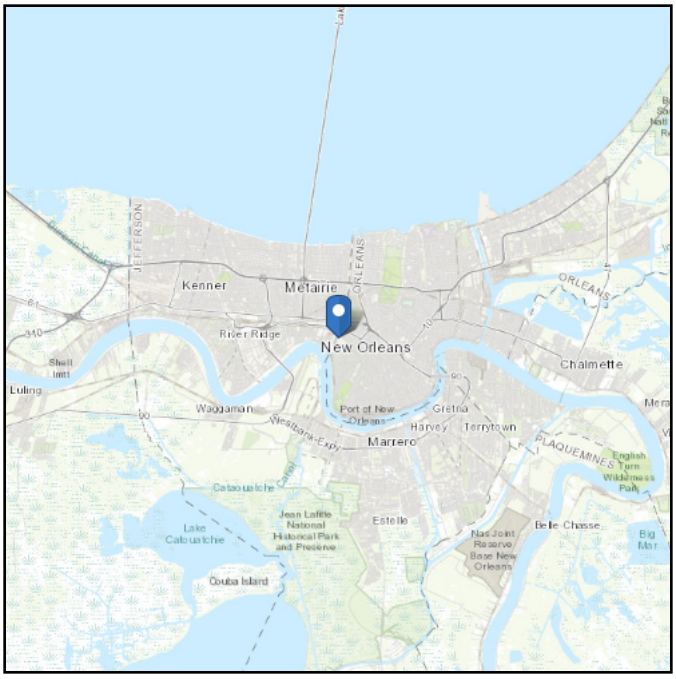

Seismic

Site Soil Class: E - Soft Clay Soil

Results:

S_S :	0.096	S_{DS} :	0.161
S_1 :	0.052	S_{D1} :	0.12
F_a :	2.5	T_L :	12
F_v :	3.5	PGA :	0.046
S_{MS} :	0.241	PGA_M :	0.116
S_{M1} :	0.18	F_{PGA} :	2.5
		I_e :	1.5

Seismic Design Category C

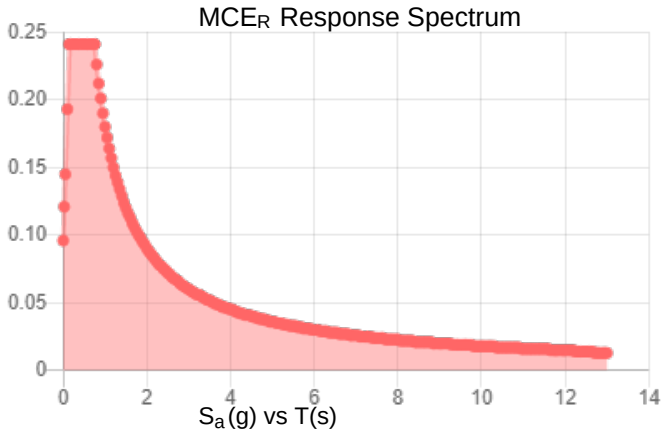

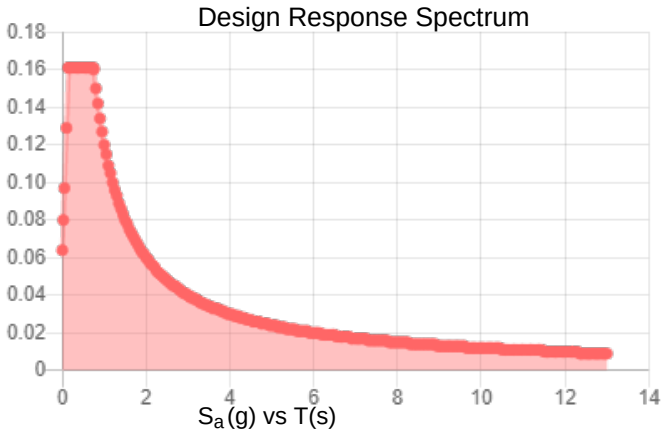

Data Accessed: **Mon May 23 2022**

Date Source:

USGS Seismic Design Maps based on ASCE/SEI 7-10, incorporating Supplement 1 and errata of March 31, 2013, and ASCE/SEI 7-10 Table 1.5-2. Additional data for site-specific ground motion procedures in accordance with ASCE/SEI 7-10 Ch. 21 are available from USGS.

The ASCE 7 Hazard Tool is provided for your convenience, for informational purposes only, and is provided "as is" and without warranties of any kind. The location data included herein has been obtained from information developed, produced, and maintained by third party providers; or has been extrapolated from maps incorporated in the ASCE 7 standard. While ASCE has made every effort to use data obtained from reliable sources or methodologies, ASCE does not make any representations or warranties as to the accuracy, completeness, reliability, currency, or quality of any data provided herein. Any third-party links provided by this Tool should not be construed as an endorsement, affiliation, relationship, or sponsorship of such third-party content by or from ASCE.

ASCE does not intend, nor should anyone interpret, the results provided by this Tool to replace the sound judgment of a competent professional, having knowledge and experience in the appropriate field(s) of practice, nor to substitute for the standard of care required of such professionals in interpreting and applying the contents of this Tool or the ASCE 7 standard.

In using this Tool, you expressly assume all risks associated with your use. Under no circumstances shall ASCE or its officers, directors, employees, members, affiliates, or agents be liable to you or any other person for any direct, indirect, special, incidental, or consequential damages arising from or related to your use of, or reliance on, the Tool or any information obtained therein. To the fullest extent permitted by law, you agree to release and hold harmless ASCE from any and all liability of any nature arising out of or resulting from any use of data provided by the ASCE 7 Hazard Tool.

APPENDIX IX

EE 24753 SWBNO - 12-in. OSP Fixed

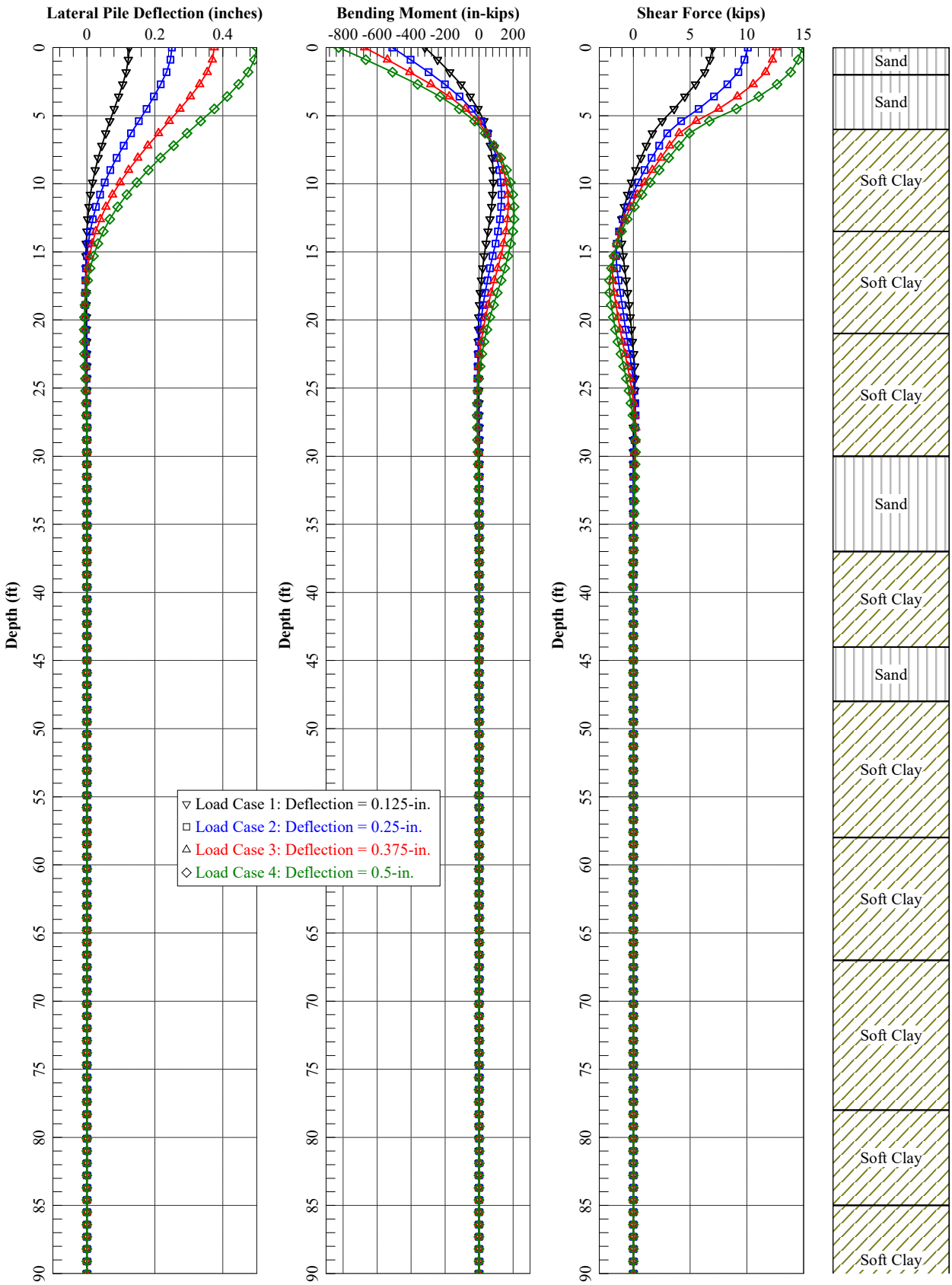

EE 24753 SWBNO - 14-in. OSP Fixed

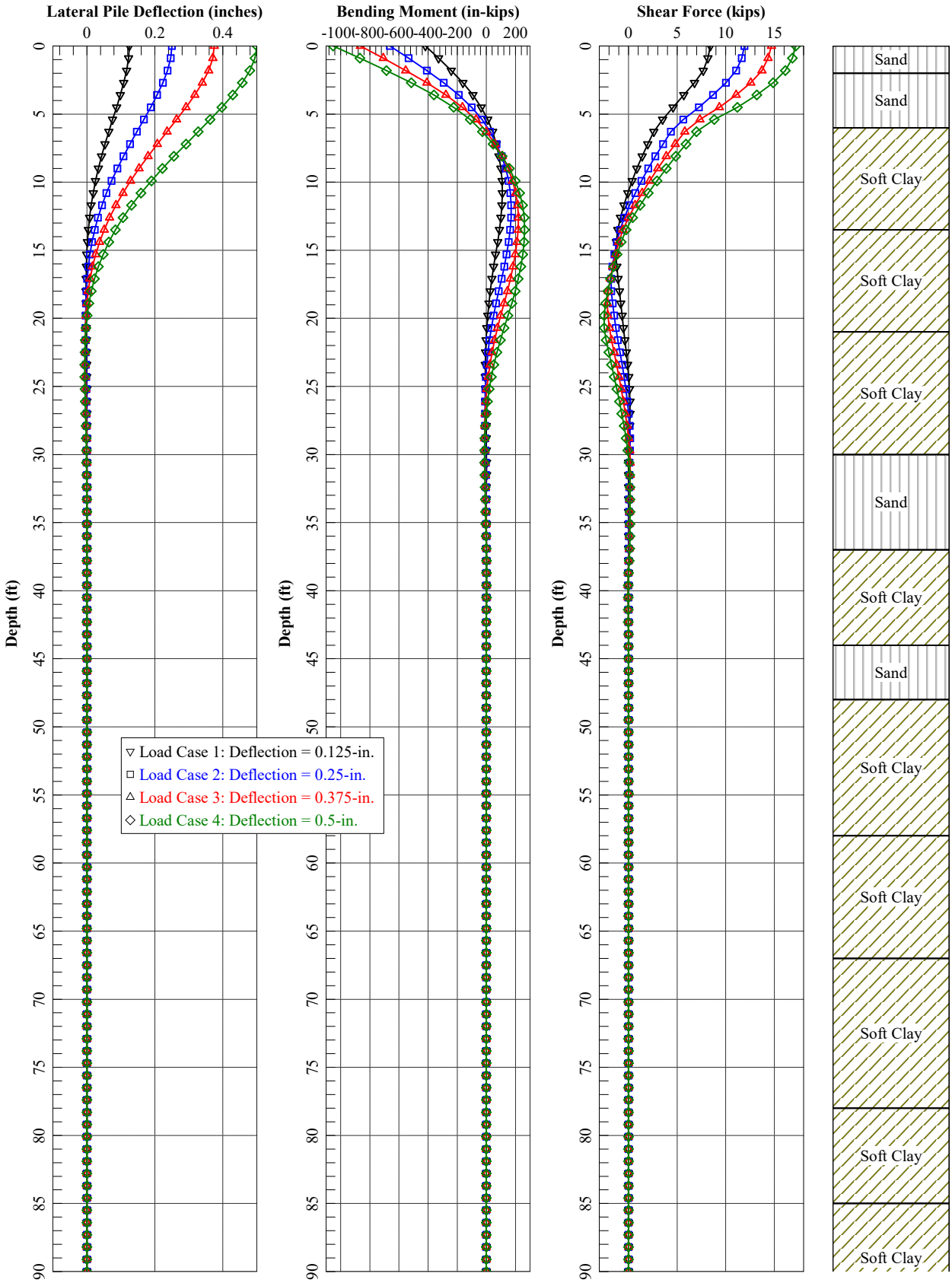

EE 24753 SWBNO - 18-in. OSP Fixed

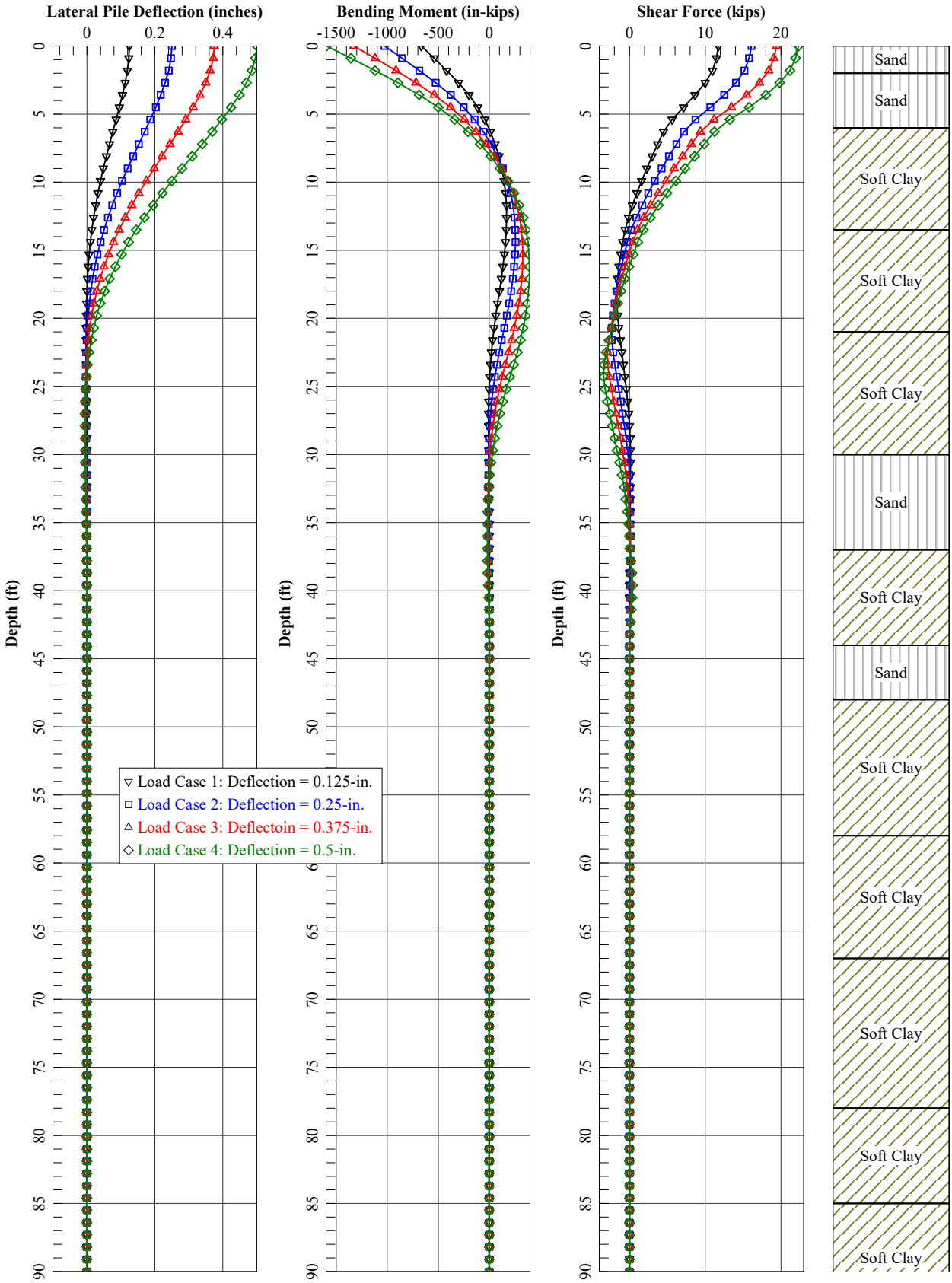

EE 24753 SWBNO - 24-in. OSP Fixed

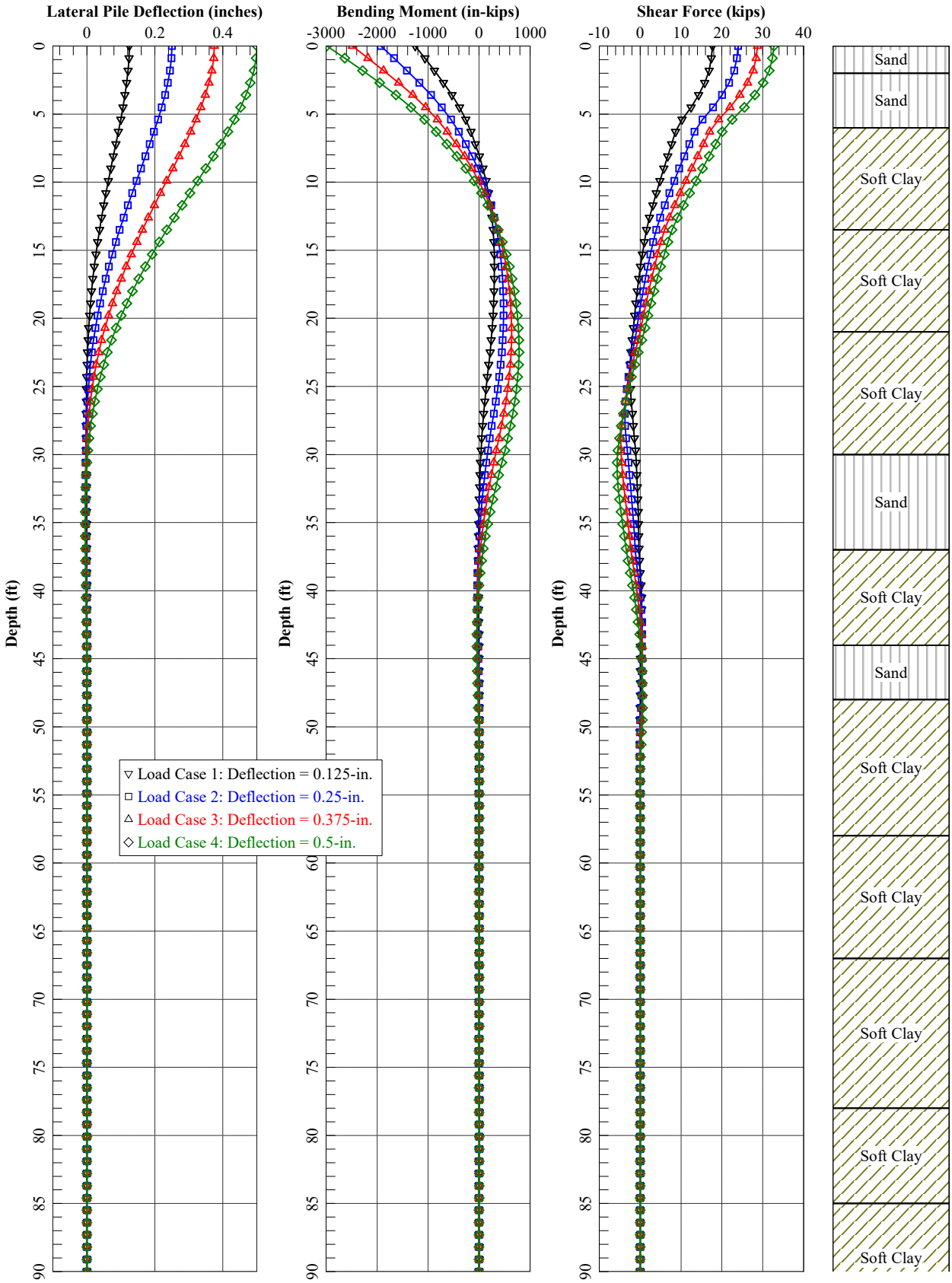

EE 24753 SWBNO - 12-in. OSP Free

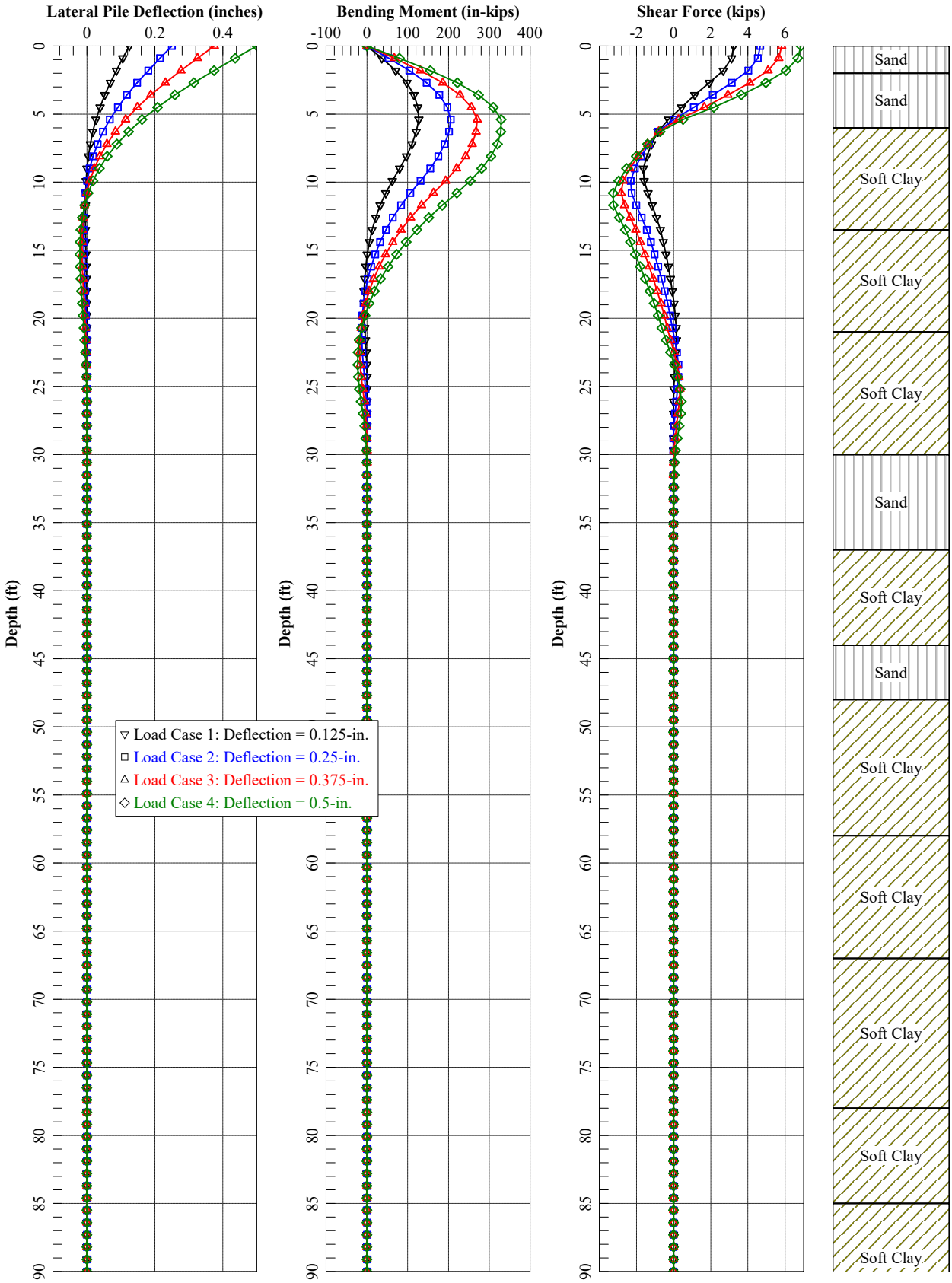

EE 24753 SWBNO - 14-in. OSP Free

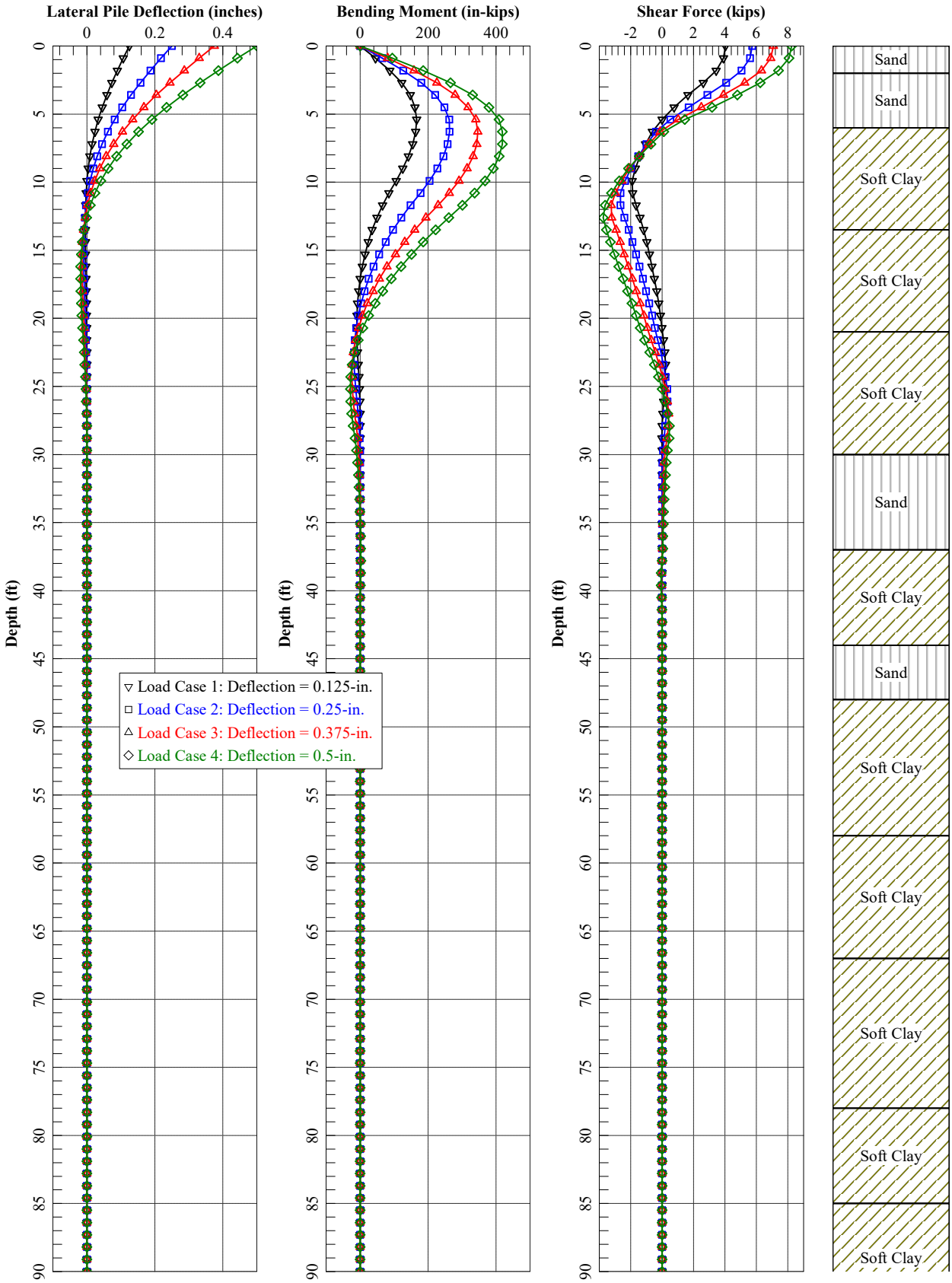

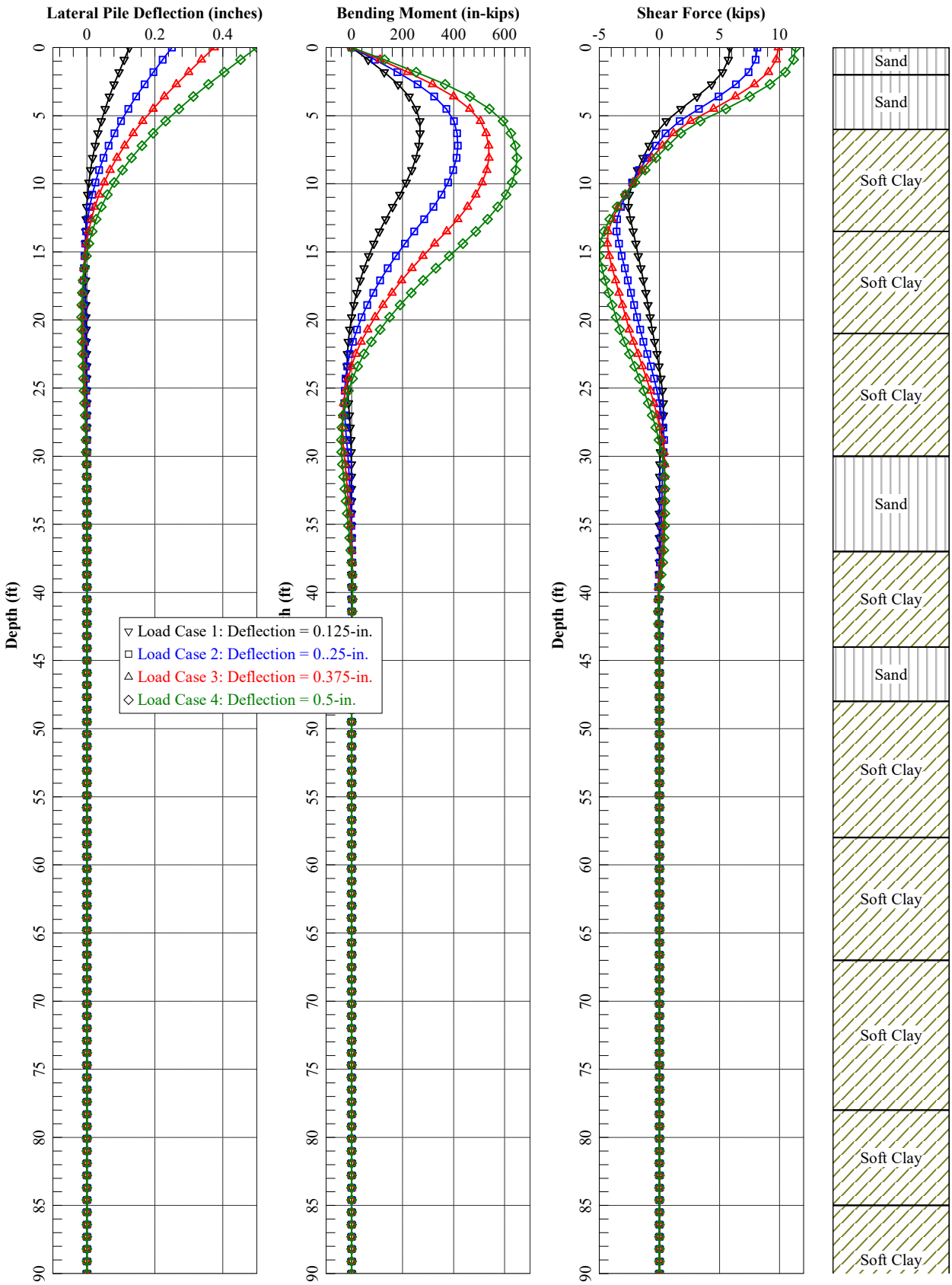
EE 24753 SWBO - 18-in. OSP Free
Lateral Pile Deflection (inches)
Bending Moment (in-kips)
Shear Force (kips)
Depth (ft)
Load Case 1: Deflection = 0.125-in.
Load Case 2: Deflection = 0..25-in.
Load Case 3: Deflection = 0.375-in.
Load Case 4: Deflection = 0.5-in.
Sand
Soft Clay

EE 24753 SWBNO - 24-in. OSP Free

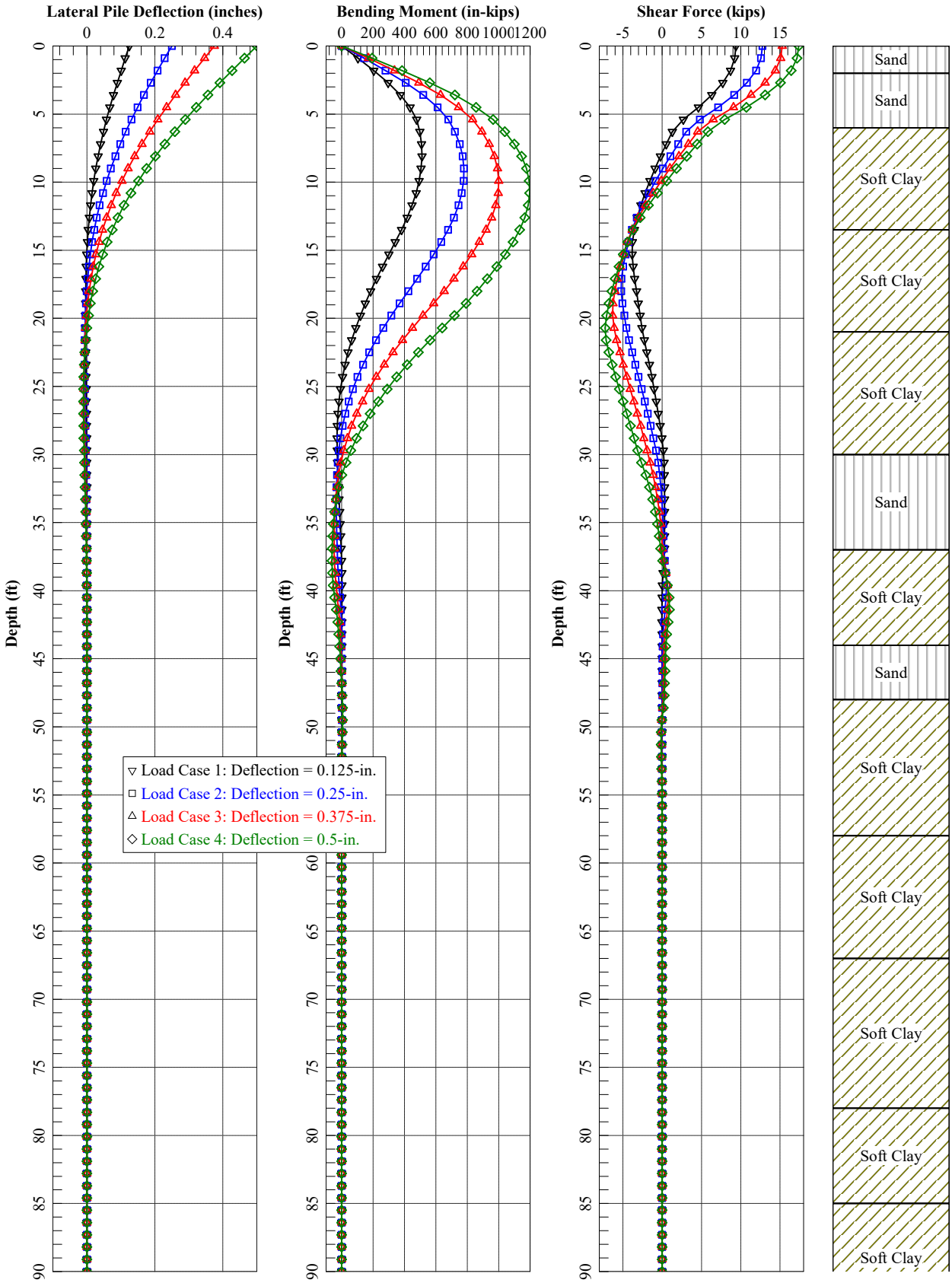

REFERENCE INFORMATION

APPENDIX A2

Stormwater Management Plan (SWMP), including Preliminary Stormwater Pollution Prevention Plan (SWPPP), Volkert, Dated September 2022

STORMWATER MANAGEMENT PLAN (SWMP)

WEST POWER COMPLEX AND OTHER SITE IMPROVEMENTS AT THE CARROLLTON WATER TREATMENT PLANT

Owner:
Sewerage & Water Board of New Orleans
8800 S. Claiborne Avenue
New Orleans, LA 70119

Engineer
Volkert, Inc.
4141 Bienville St. Suite 102
New Orleans, LA 70119

Version 2

Rev. September, 2022

Table of Contents:

1. SITE ASSESSMENT
- **1.1 Existing Site Plan**
- **1.2 Existing Storm Drainage Site Plan**
- **1.3 Existing Storm Drainage Conditions Description**
- **1.4 Infiltration Test**

2. SITE DESIGN
- **2.1 Proposed Site Plan**
- **2.2 Proposed Storm Drainage Area Map**
- **2.3 Proposed Storm Drainage Site Plan**
- **2.4 Existing BMP Plans**
- **2.5 Proposed Storm Drainage Conditions Narrative**

3. CALCULATIONS
- **3.1 Runoff & Containment Calculations**
- **3.2 Pollutant Load Calculations**

4. OPERATIONS & MAINTENANCE PLAN
- **5.1 O&M Plan**
- **5.3 O&M Agreement**

5. PRELIMINARY SWPPP (CONTRACTOR TO PROVIDE FINAL SWPPP)

6. LANDSCAPE PLAN

APPENDICES
- **A. SWMP Requirements (CZO Article 23) Guidance**
- **B. Site Photos**

1.1 EXISTING SITE PLAN

Scale : 1" = 50'

LEGEND

- CITY–PARISH LIMIT LINE
- LIMITS OF PROPOSED WORK
- S&WB PROPERTY LINE
- FENCE

STATE OF LOUISIANA
ELIZABETH S. LONIELLO
License No. 41579
PROFESSIONAL ENGINEER
IN
CIVIL ENGINEERING
3/14/18

JEFFERSON PARISH
ORLEANS PARISH

CANAL

MONTICELLO AVENUE

GRAVEL ROAD

MONTICELLO LEVEE (ORLEANS LEVEE DISTRICT)

MISTLETOE STREET

TANK

TANK

TANK

TANK

TANK

CARROLLTON WATER PLANT
8800 S. CLAIBORNE AVENUE

CLAIBORNE AVENUE (US-90) EASTBOUND

CLAIBORNE AVENUE (US-90) WESTBOUND

BASIN C-7
(ABANDONED)

BASIN C-8
(ABANDONED)

BASIN L-4
(ACTIVE)

BASIN C-5
(ACTIVE)

BASIN C-6
(ACTIVE)

ACCESSORY BUILDING

ACCESSORY BUILDING

ACCESSORY BUILDING

PRELIMINARY
FOR PERMIT PURPOSES ONLY

ENGINEER: ELIZABETH S. LONIELLO
LICENSE #: 41579
DATE: 02/15/2018

NO.	DATE	DESCRIPTION	BY

SEWERAGE AND WATER BOARD
OF NEW ORLEANS

CONTRACT 1403

DEMOLITION OF ABANDONED C-7 & C-8 BASINS
AND OTHER SITE IMPROVEMENTS
AT THE CARROLLTON WATER TREATMENT PLANT

EXISTING
SITE PLAN

DR.	
TRC.	
CK.	
AP.	
SCALE	1" = 50'
DATE	2/15/18

VOLKERT, INC.
3801 CANAL ST. SUITE 210
NEW ORLEANS, LA, 70119
(504) 488-8002

JOB NO.

SHEET NO. 1.1

1.2 EXISTING STORM DRAINAGE SITE PLAN

Scale : 1" = 30'

CENTERLINE OF LEVEE

TOP OF SLOPE

TOE OF SLOPE

REQ'D CMP RISER
W/ ACCESS COVER
TOP: 2.67
INV.: −1.70

REQ'D MANHOLE
W/ GRATE INLET
TOP: 2.00
INV.: −1.00

REQ'D 72'
15" SDP

REQ'D CMP RISER
W/ ACCESS COVER
TOP: 2.50
INV.: −1.70

REQ'D CMP DETENTION SYSTEM
CONTECH OR APPROVED EQUAL
MIN. STORAGE VOLUME 20,000
CU.FT.

REQ'D CMP RISER
W/ GRATE INLET
TOP: 2.30
INV.: −1.70

REQ'D CMP RISER
W/ ACCESS COVER
TOP: 3.50
INV.: −2.00

REQ'D CMP RISER
W/ GRATE INLET
TOP: 3.00
INV.: −2.00

REQ'D CMP DETENTION SYSTEM
CONTECH OR APPROVED EQUAL
MIN. STORAGE VOLUME 10,000
CU.FT.

C-7/L-4 WALL

D.A. = 5.8 AC.

D.A. = 2.1 AC.

REQ'D OUTLET CONTROL
7"ø ORIFICE PLATE
INV.: −2.20

REQ'D 112'
15" SDP

REQ'D OUTLET CONTROL
8.5"ø ORIFICE PLATE
INV.: −2.00

REQ'D 116'
15" SDP

REQ'D 172'
15" SDP

REQ'D ACCESS
MANHOLE
TOP: 3.67
INV.: −2.85

REQ'D 167'
15" SDP

NEW ACCESS
MANHOLE
TOP: 3.67
INV.: −3.35

REQ'D 55'
15" SDP

REQ'D ACCESS
MANHOLE
TOP: 3.67
INV.: −2.85

REQ'D 20'
15" SDP

CLEAN & TAP
EXIST. OVERFLOW
STAND PIPE

REQ'D ACCESS
MANHOLE
TOP: 3.67
INV.: −2.35

REQ'D WALL PERFORATION 2 16|17

1 16|17

3 16|17

CENTERLINE OF PASSAGE

EXIST. 20" DUCTILE IRON
GRAVITY DRAIN PIPE TO CLAIBORNE AVE.

BACK OF SIDEWALK

NOTES:

1. DETENTION SYSTEM SHALL BE 36" 16-GAGE POLYMER-COATED CORRUGATED METAL PIPE, CONTECH OR APPROVED EQUAL. 2 1
2. 15" SDP PIPE SHALL HAVE A SMOOTH INTERIOR AND ANNULAR EXTERIOR CORRUGATIONS AND MEET OR EXCEED ASTM F2881 AND AASHTO M330. PIPE SHALL BE JOINED WITH A GASKETED INTEGRAL BELL & SPIGOT JOINT MEETING THE REQUIRMENTS OF ASTM F2881.

HYDRAULIC DESIGN TABLE	
DESIGN STORM FREQUENCY	500 YR
DESIGN STORM DURATION	24 HR
DESIGN STORM DEPTH	15.1 IN
DESIGN FILL MATERIAL INFILTRATION RATE	120 MM/HR
METHOD	GREEN-AMPT
RAINFALL EXCESS VOLUME	30,000 CU.FT.
MAX OUTFLOW AT CONTROL STRUCTURE, SYSTEM A	2 CFS ±
MAX OUTFLOW AT CONTROL STRUCTURE, SYSTEM B	3 CFS ±

LEGEND:

— — — DRAINAGE BOUNDARY

EDGE OF EXIST. BURIED PILE-SUPPORTED STRUT OR SLAB

EXIST. PILE

REQ'D. FLOW DIRECTION

STATE OF LOUISIANA
J. L. EVANS
REG. NO. 21307
REGISTERED
PROFESSIONAL ENGINEER
IN
CIVIL ENGINEERING

REV.	DATE	DESCRIPTION	BY
4	03/16/21	MOVED TOE SLOPE	JE
3	02/17/21	MOVED OUTLET PIPE	JE
2	01/27/21	ADDED DRAIN PIPE NOTE	JE
1	07/13/20	REMOVAL OF NOTE PERTAINING TO CMP	JE

SEWERAGE AND WATER BOARD OF NEW ORLEANS

CONTRACT 1403

DEMOLITION OF ABANDONED C-7 & C-8 BASINS AT THE CARROLLTON WATER TREATMENT PLANT

C-7 & C-8 DRAINAGE PLAN

DR.	E.L.
TRC.	P.L.
CK.	L.F.
AP.	E.L.
SCALE:	1" = 400'
DATE:	06/05/2018

DWG. No. **12157-W-25**

SET NO.

SHEET NO. 16 OF 42

1.3 EXISTING STORM DRAINAGE CONDITIONS DESCRIPTION

Site Location:

The site is at the north corner of the Carrollton Water Plant (CWP), 8800 S. Claiborne Avenue, New Orleans, Louisiana. The site consists of two adjacent clarification basins, namely C-7 and C-8, which were built in the early 1900s but have subsequently been decommissioned.

Site Size:

The C-7 basin covers an area of 3.0 acres. The C-8 basin covers an area of 3.9 areas. The total drainage area to these basins is 7.9 acres due to the additional tributary area from the adjacent Monticello levee.

Adjacent Property:

The Monticello levee parallels the site along the northwest perimeter of the basins. The Monticello levee separates Orleans and Jefferson Parishes. On the opposite side of the levee is Monticello Avenue and a residential area of Jefferson Parish.

On the northeast perimeter of the site are the existing water storage tanks which are part of the Carrollton Water Plant and are visible from Claiborne Avenue.

The southwest and southeast perimeters of the site abut with existing active water treatment basins at the Carrollton Water Plant.

Existing Topography, Land Cover Type, & Structures:

There are three small accessory buildings (housing pumps and electrical equipment), but most of the area is open basin, filled with sand and coarse lightweight aggregate. This fill is topped with a gravel surface that is sloped to a 0.5% grade. Most of the concrete slab, previously located at the bottom of the basins, has been removed, allowing for the free movement of groundwater. The tributary area from the levee is primarily grassed, with some gravel roadway.

USDA NRCS Soil Type:

Per the NRCS Soil Survey, the soil underlying the gravel and lightweight fill of the basins are primarily Schriever clay with a very small amount of Cancienne silty clay loam. Geotechnical investigations confirm that the upper layers are primarily clay, and indicate that there is a layer of sand below the clay.

Existing Drainage Infrastructure:

The existing site conditions provides for the majority of rainfall to be infiltrated into the sand fill. The excess rainfall is stored in two underground stormwater storage tanks, fabricated from perforated 36” corrugated metal pipe (CMP). The larger detention system can store 31,000 cubic feet, and the smaller system can store approximately 10,000 cubic feet. Water is gathered into these detention systems through various manholes and grate inlets and is then discharged through controlling orifice plates into 15” storm drainage pipes, leading to an overflow standpipe. For a 10-year storm event, the detention systems are designed to have an outflow of 1.70 cfs.

1.4 INFILTRATION TEST

The infiltrating materials at this site are in-situ soils. For the purposes of stormwater calculations, a saturated hydraulic conductivity (K_s) rate of 120 mm/hr was assumed. Actual rates for materials from local sources are expected to be higher, but this value was chosen conservatively from the following data:

K_{sat} (mm/hr)	*Soil Type*	*Source*
152 to 508	Sand	NRCS
120	Sand	Chin, David A. Water Resources Engineering. 2nd Edition.
180	Clean Sand	Lindeburg, Michael R. Civil Engineering Reference Manual for the PE Exam. 14th Edition.
1800	Gravelly Sand	Lindeburg, Michael R. Civil Engineering Reference Manual for the PE Exam. 14th Edition.

Accordingly, the project specifications will require infiltration testing of any replaced borrow material with a minimum saturated hydraulic conductivity of 120 mm/hr or more; and a waiver of infiltration test results for permitting requirements is requested.

2.1 PROPOSED SITE PLAN

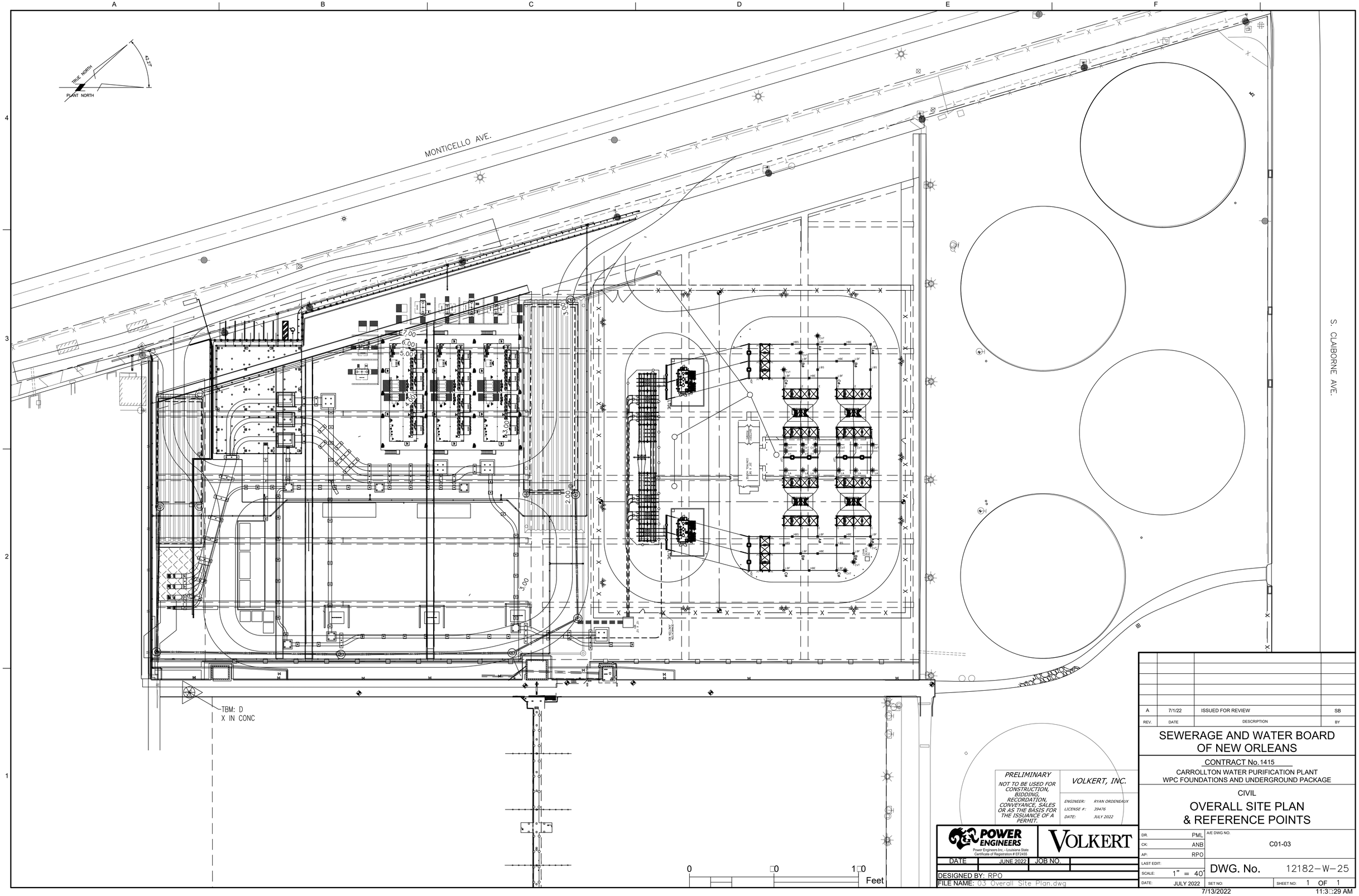

REV.	DATE	DESCRIPTION	BY
A	7/1/22	ISSUED FOR REVIEW	SB

SEWERAGE AND WATER BOARD OF NEW ORLEANS

CONTRACT No. 1415

CARROLLTON WATER PURIFICATION PLANT
WPC FOUNDATIONS AND UNDERGROUND PACKAGE

CIVIL

OVERALL SITE PLAN & REFERENCE POINTS

PRELIMINARY
NOT TO BE USED FOR CONSTRUCTION, BIDDING, RECORDATION, CONVEYANCE, SALES OR AS THE BASIS FOR THE ISSUANCE OF A PERMIT.

VOLKERT, INC.
ENGINEER: RYAN ORDENEAUX
LICENSE #: 39476
DATE: JULY 2022

POWER ENGINEERS
Power Engineers Inc. - Louisiana State Certificate of Registration # EF2435

VOLKERT

DR:	PML
CK:	ANB
AP:	RPO
LAST EDIT:	
SCALE:	1" = 40'
DATE:	JULY 2022

A/E DWG NO. C01-03

DWG. No. 12182-W-25

SET NO: SHEET NO: 1 OF 1

DATE JUNE 2022 JOB NO.

DESIGNED BY: RPO
FILE NAME: 03 Overall Site Plan.dwg

7/13/2022
11:3□:29 AM

ISSUED FOR REVIEW NOT FOR CONSTRUCTION

2.2 PROPOSED STORM DRAINAGE AREA MAP

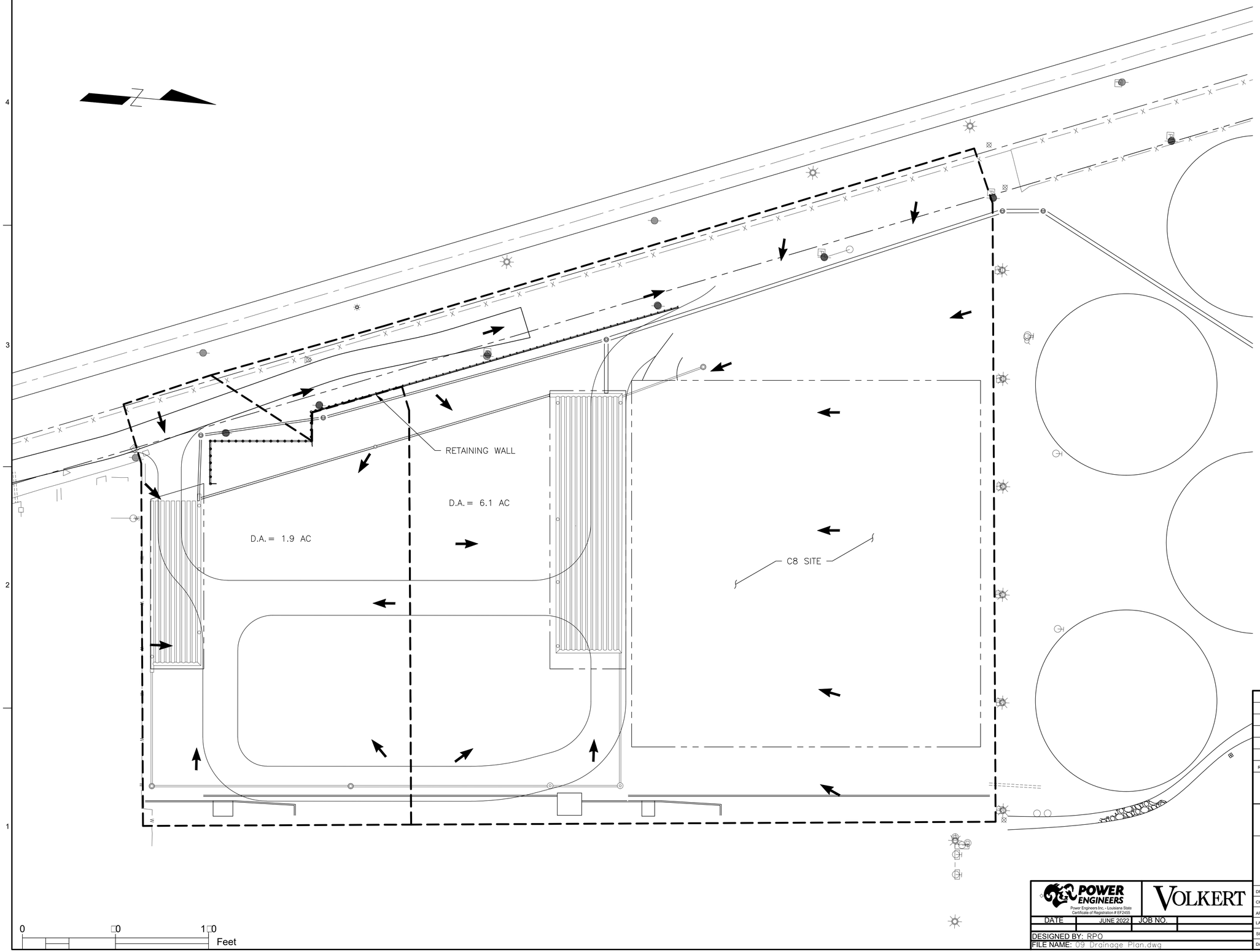

PRELIMINARY
NOT TO BE USED FOR CONSTRUCTION, BIDDING, RECORDATION, CONVEYANCE, SALES OR AS THE BASIS FOR THE ISSUANCE OF A PERMIT.

VOLKERT, INC.
ENGINEER: RYAN ORDENEAUX
LICENSE #: 39476
DATE: JUNE 2022

REV.	DATE	DESCRIPTION	BY
A	7/1/22	ISSUED FOR REVIEW	SB

SEWERAGE AND WATER BOARD OF NEW ORLEANS

CONTRACT No. 1415

CARROLLTON WATER PURIFICATION PLANT
WPC FOUNDATIONS AND UNDERGROUND PACKAGE

CIVIL

PROPOSED DRAINAGE AREAS

POWER ENGINEERS
Power Engineers Inc. - Louisiana State Certificate of Registration # EF2455

VOLKERT

DATE	JUNE 2022
JOB NO.	
DESIGNED BY:	RPO
FILE NAME:	09 Drainage Plan.dwg
DR.	PML
CK:	ANB
AP:	RPO
LAST EDIT:	
SCALE:	1" = 50'
DATE:	JULY 2022
A/E DWG NO.	C01-09
DWG. No.	12182-W-25
SET NO:	SHEET NO: 1 OF 1

7/14/2022 4:39:47 PM

ISSUED FOR REVIEW NOT FOR CONSTRUCTION

2.3 PROPOSED STORM DRAINAGE SITE PLA

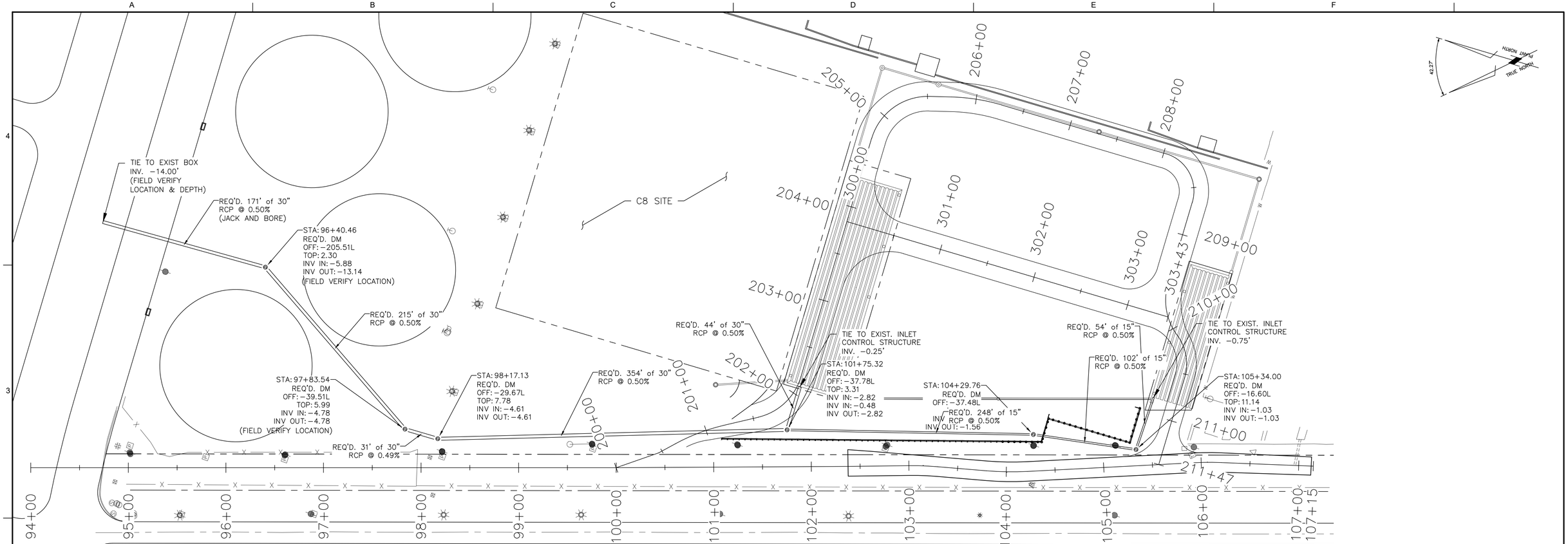

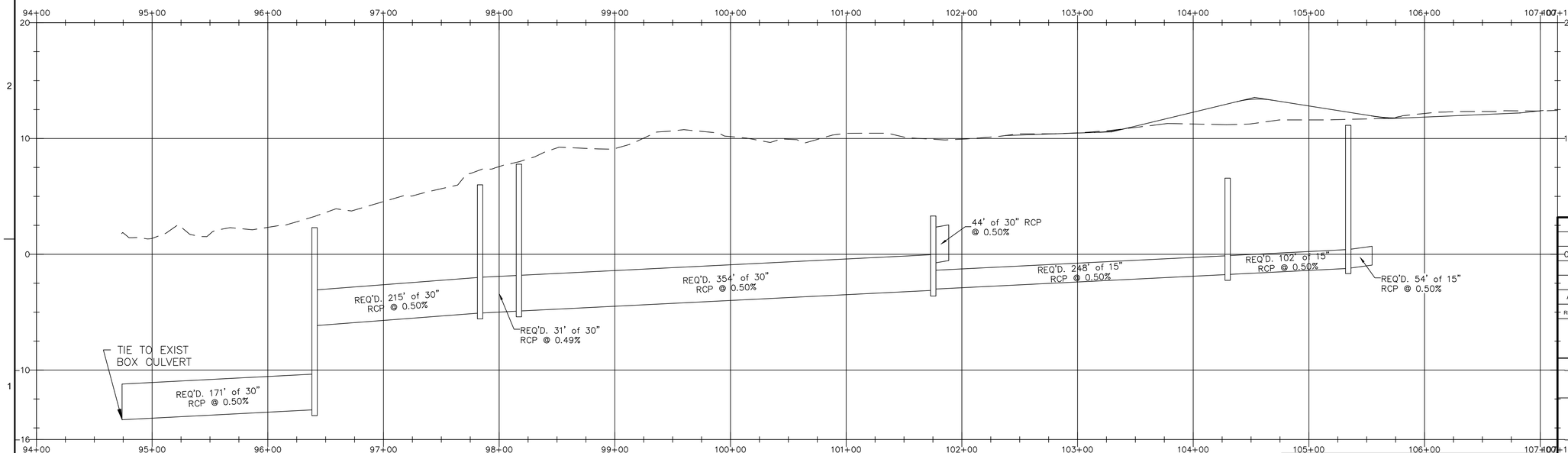

0 50' 100'

SCALE: 1" = 50'

PRELIMINARY
NOT TO BE USED FOR CONSTRUCTION, BIDDING, RECORDATION, CONVEYANCE, SALES OR AS THE BASIS FOR THE ISSUANCE OF A PERMIT.

VOLKERT, INC.

ENGINEER: RYAN ORDENEAUX
LICENSE #: 39476
DATE: JUNE 2022

REV.	DATE	DESCRIPTION	BY
A	7/1/22	ISSUED FOR REVIEW	SB

SEWERAGE AND WATER BOARD OF NEW ORLEANS

CONTRACT No.1415

CARROLLTON WATER PURIFICATION PLANT
WPC FOUNDATIONS AND UNDERGROUND PACKAGE

CIVIL

DRAINAGE PLAN & PROFILE

POWER ENGINEERS
Power Engineers Inc. - Louisiana State Certificate of Registration # EF2455

VOLKERT

DATE	JUNE 2022
JOB NO.	
DESIGNED BY:	RPO
FILE NAME:	09 Drainage Plan.dwg
DR:	PML
CK:	ANB
AP:	RPO
LAST EDIT:	
SCALE:	1" = 50'
DATE:	JULY 2022
A/E DWG NO.	C01-09
DWG. No.	12182−W−25
SET NO:	
SHEET NO:	1 OF 1

ISSUED FOR REVIEW NOT FOR CONSTRUCTION

7/1/2022 10:49:11 AM

2.4 EXISTING BMP PLANS

PROJECT INFORMATION	
ENGINEERED PRODUCT MANAGER:	BRANDON FACIANE 504-259-6556 BRANDON.FACIANE@ADS-PIPE.COM
ADS SALES REP:	RENE DAIGLE 337-366-5701 RENE.DAIGLE@ADS-PIPE.COM
PROJECT NO:	S192224

ADVANCED DRAINAGE SYSTEMS, INC.

SiteASSIST™ by StormTech

FOR STORMTECH INSTRUCTIONS, DOWNLOAD THE INSTALLATION APP

DETENTION BASINS 7 & 8

NEW ORLEANS, LA

SC-740 STORMTECH CHAMBER SPECIFICATIONS

1. CHAMBERS SHALL BE STORMTECH SC-740.
2. CHAMBERS SHALL BE ARCH-SHAPED AND SHALL BE MANUFACTURED FROM VIRGIN, IMPACT-MODIFIED POLYPROPYLENE COPOLYMERS.
3. CHAMBERS SHALL MEET THE REQUIREMENTS OF ASTM F2418-16a, "STANDARD SPECIFICATION FOR POLYPROPYLENE (PP) CORRUGATED WALL STORMWATER COLLECTION CHAMBERS".
4. CHAMBER ROWS SHALL PROVIDE CONTINUOUS, UNOBSTRUCTED INTERNAL SPACE WITH NO INTERNAL SUPPORTS THAT WOULD IMPEDE FLOW OR LIMIT ACCESS FOR INSPECTION.
5. THE STRUCTURAL DESIGN OF THE CHAMBERS, THE STRUCTURAL BACKFILL, AND THE INSTALLATION REQUIREMENTS SHALL ENSURE THAT THE LOAD FACTORS SPECIFIED IN THE AASHTO LRFD BRIDGE DESIGN SPECIFICATIONS, SECTION 12.12, ARE MET FOR: 1) LONG-DURATION DEAD LOADS AND 2) SHORT-DURATION LIVE LOADS, BASED ON THE AASHTO DESIGN TRUCK WITH CONSIDERATION FOR IMPACT AND MULTIPLE VEHICLE PRESENCES.
6. CHAMBERS SHALL BE DESIGNED, TESTED AND ALLOWABLE LOAD CONFIGURATIONS DETERMINED IN ACCORDANCE WITH ASTM F2787, "STANDARD PRACTICE FOR STRUCTURAL DESIGN OF THERMOPLASTIC CORRUGATED WALL STORMWATER COLLECTION CHAMBERS". LOAD CONFIGURATIONS SHALL INCLUDE: 1) INSTANTANEOUS (<1 MIN) AASHTO DESIGN TRUCK LIVE LOAD ON MINIMUM COVER 2) MAXIMUM PERMANENT (75-YR) COVER LOAD AND 3) ALLOWABLE COVER WITH PARKED (1-WEEK) AASHTO DESIGN TRUCK.
7. REQUIREMENTS FOR HANDLING AND INSTALLATION:
   - TO MAINTAIN THE WIDTH OF CHAMBERS DURING SHIPPING AND HANDLING, CHAMBERS SHALL HAVE INTEGRAL, INTERLOCKING STACKING LUGS.
   - TO ENSURE A SECURE JOINT DURING INSTALLATION AND BACKFILL, THE HEIGHT OF THE CHAMBER JOINT SHALL NOT BE LESS THAN 2".
   - TO ENSURE THE INTEGRITY OF THE ARCH SHAPE DURING INSTALLATION, a) THE ARCH STIFFNESS CONSTANT AS DEFINED IN SECTION 6.2.8 OF ASTM F2418 SHALL BE GREATER THAN OR EQUAL TO 550 LBS/IN/IN. AND b) TO RESIST CHAMBER DEFORMATION DURING INSTALLATION AT ELEVATED TEMPERATURES (ABOVE 73° F / 23° C), CHAMBERS SHALL BE PRODUCED FROM REFLECTIVE GOLD OR YELLOW COLORS.
8. ONLY CHAMBERS THAT ARE APPROVED BY THE SITE DESIGN ENGINEER WILL BE ALLOWED. UPON REQUEST BY THE SITE DESIGN ENGINEER OR OWNER, THE CHAMBER MANUFACTURER SHALL SUBMIT A STRUCTURAL EVALUATION FOR APPROVAL BEFORE DELIVERING CHAMBERS TO THE PROJECT SITE AS FOLLOWS:
   - THE STRUCTURAL EVALUATION SHALL BE SEALED BY A REGISTERED PROFESSIONAL ENGINEER.
   - THE STRUCTURAL EVALUATION SHALL DEMONSTRATE THAT THE SAFETY FACTORS ARE GREATER THAN OR EQUAL TO 1.95 FOR DEAD LOAD AND 1.75 FOR LIVE LOAD, THE MINIMUM REQUIRED BY ASTM F2787 AND BY SECTIONS 3 AND 12.12 OF THE AASHTO LRFD BRIDGE DESIGN SPECIFICATIONS FOR THERMOPLASTIC PIPE.
   - THE TEST DERIVED CREEP MODULUS AS SPECIFIED IN ASTM F2418 SHALL BE USED FOR PERMANENT DEAD LOAD DESIGN EXCEPT THAT IT SHALL BE THE 75-YEAR MODULUS USED FOR DESIGN.
9. CHAMBERS AND END CAPS SHALL BE PRODUCED AT AN ISO 9001 CERTIFIED MANUFACTURING FACILITY.

IMPORTANT - NOTES FOR THE BIDDING AND INSTALLATION OF THE SC-740 SYSTEM

1. STORMTECH SC-740 CHAMBERS SHALL NOT BE INSTALLED UNTIL THE MANUFACTURER'S REPRESENTATIVE HAS COMPLETED A PRE-CONSTRUCTION MEETING WITH THE INSTALLERS.
2. STORMTECH SC-740 CHAMBERS SHALL BE INSTALLED IN ACCORDANCE WITH THE "STORMTECH SC-310/SC-740/DC-780 CONSTRUCTION GUIDE".
3. CHAMBERS ARE NOT TO BE BACKFILLED WITH A DOZER OR AN EXCAVATOR SITUATED OVER THE CHAMBERS. STORMTECH RECOMMENDS 3 BACKFILL METHODS:
   - STONESHOOTER LOCATED OFF THE CHAMBER BED.
   - BACKFILL AS ROWS ARE BUILT USING AN EXCAVATOR ON THE FOUNDATION STONE OR SUBGRADE.
   - BACKFILL FROM OUTSIDE THE EXCAVATION USING A LONG BOOM HOE OR EXCAVATOR.
4. THE FOUNDATION STONE SHALL BE LEVELED AND COMPACTED PRIOR TO PLACING CHAMBERS.
5. JOINTS BETWEEN CHAMBERS SHALL BE PROPERLY SEATED PRIOR TO PLACING STONE.
6. MAINTAIN MINIMUM - 6" (150 mm) SPACING BETWEEN THE CHAMBER ROWS.
7. EMBEDMENT STONE SURROUNDING CHAMBERS MUST BE A CLEAN, CRUSHED, ANGULAR STONE 3/4-2" (20-50 mm).
8. THE CONTRACTOR MUST REPORT ANY DISCREPANCIES WITH CHAMBER FOUNDATION MATERIALS BEARING CAPACITIES TO THE SITE DESIGN ENGINEER.
9. ADS RECOMMENDS THE USE OF "FLEXSTORM CATCH IT" INSERTS DURING CONSTRUCTION FOR ALL INLETS TO PROTECT THE SUBSURFACE STORMWATER MANAGEMENT SYSTEM FROM CONSTRUCTION SITE RUNOFF.

NOTES FOR CONSTRUCTION EQUIPMENT

1. STORMTECH SC-740 CHAMBERS SHALL BE INSTALLED IN ACCORDANCE WITH THE "STORMTECH SC-310/SC-740/DC-780 CONSTRUCTION GUIDE".
2. THE USE OF CONSTRUCTION EQUIPMENT OVER SC-740 CHAMBERS IS LIMITED:
   - NO EQUIPMENT IS ALLOWED ON BARE CHAMBERS.
   - NO RUBBER TIRED LOADERS, DUMP TRUCKS, OR EXCAVATORS ARE ALLOWED UNTIL PROPER FILL DEPTHS ARE REACHED IN ACCORDANCE WITH THE "STORMTECH SC-310/SC-740/DC-780 CONSTRUCTION GUIDE".
   - WEIGHT LIMITS FOR CONSTRUCTION EQUIPMENT CAN BE FOUND IN THE "STORMTECH SC-310/SC-740/DC-780 CONSTRUCTION GUIDE".
3. FULL 36" (900 mm) OF STABILIZED COVER MATERIALS OVER THE CHAMBERS IS REQUIRED FOR DUMP TRUCK TRAVEL OR DUMPING.

USE OF A DOZER TO PUSH EMBEDMENT STONE BETWEEN THE ROWS OF CHAMBERS MAY CAUSE DAMAGE TO THE CHAMBERS AND IS NOT AN ACCEPTABLE BACKFILL METHOD. ANY CHAMBERS DAMAGED BY THE "DUMP AND PUSH" METHOD ARE NOT COVERED UNDER THE STORMTECH STANDARD WARRANTY.

CONTACT STORMTECH AT 1-888-892-2694 WITH ANY QUESTIONS ON INSTALLATION REQUIREMENTS OR WEIGHT LIMITS FOR CONSTRUCTION EQUIPMENT.

©2013 ADS, INC.

PROPOSED LAYOUT NORTH BED

275	STORMTECH SC-740 CHAMBERS
22	STORMTECH SC-740 END CAPS
6	STONE ABOVE (in)
6	STONE BELOW (in)
40	% STONE VOID
21202	**INSTALLED SYSTEM VOLUME (CF) ABOVE ELEVATION -2.00 (PERIMETER STONE INCLUDED)**
10312	SYSTEM AREA (ft²)
488	SYSTEM PERIMETER (ft)

PROPOSED ELEVATIONS NORTH BED

8.80	MAXIMUM ALLOWABLE GRADE (TOP OF PAVEMENT/UNPAVED)
2.80	MINIMUM ALLOWABLE GRADE (UNPAVED WITH TRAFFIC)
2.30	MINIMUM ALLOWABLE GRADE (UNPAVED NO TRAFFIC)
2.30	MINIMUM ALLOWABLE GRADE (BASE OF FLEXIBLE PAVEMENT)
2.30	MINIMUM ALLOWABLE GRADE (TOP OF RIGID PAVEMENT)
1.30	TOP OF STONE
0.80	TOP OF SC-740 CHAMBER
-0.66	12" TOP MANIFOLD INVERT
-1.60	12" BOTTOM CONNECTION INVERT
-1.69	24" ISOLATOR ROW PLUS CONNECTION INVERT
-1.70	BOTTOM OF SC-740 CHAMBER
-2.20	UNDERDRAIN INVERT
-2.20	BOTTOM OF STONE

TOTAL VOLUME: 31,518 CF

NOTES

- MANIFOLD SIZE TO BE DETERMINED BY SITE DESIGN ENGINEER. SEE TECHNICAL NOTE 6.32 FOR MANIFOLD SIZING GUIDANCE.
- DUE TO THE ADAPTATION OF THIS CHAMBER SYSTEM TO SPECIFIC SITE AND DESIGN CONSTRAINTS, IT MAY BE NECESSARY TO CUT AND COUPLE ADDITIONAL PIPE TO STANDARD MANIFOLD COMPONENTS IN THE FIELD.
- THIS CHAMBER SYSTEM WAS DESIGNED WITHOUT SITE-SPECIFIC INFORMATION ON SOIL CONDITIONS OR BEARING CAPACITY. THE SITE DESIGN ENGINEER IS RESPONSIBLE FOR DETERMINING THE SUITABILITY OF THE SOIL AND PROVIDING THE BEARING CAPACITY OF THE INSITU SOILS. THE BASE STONE DEPTH MAY BE INCREASED OR DECREASED ONCE THIS INFORMATION IS PROVIDED.

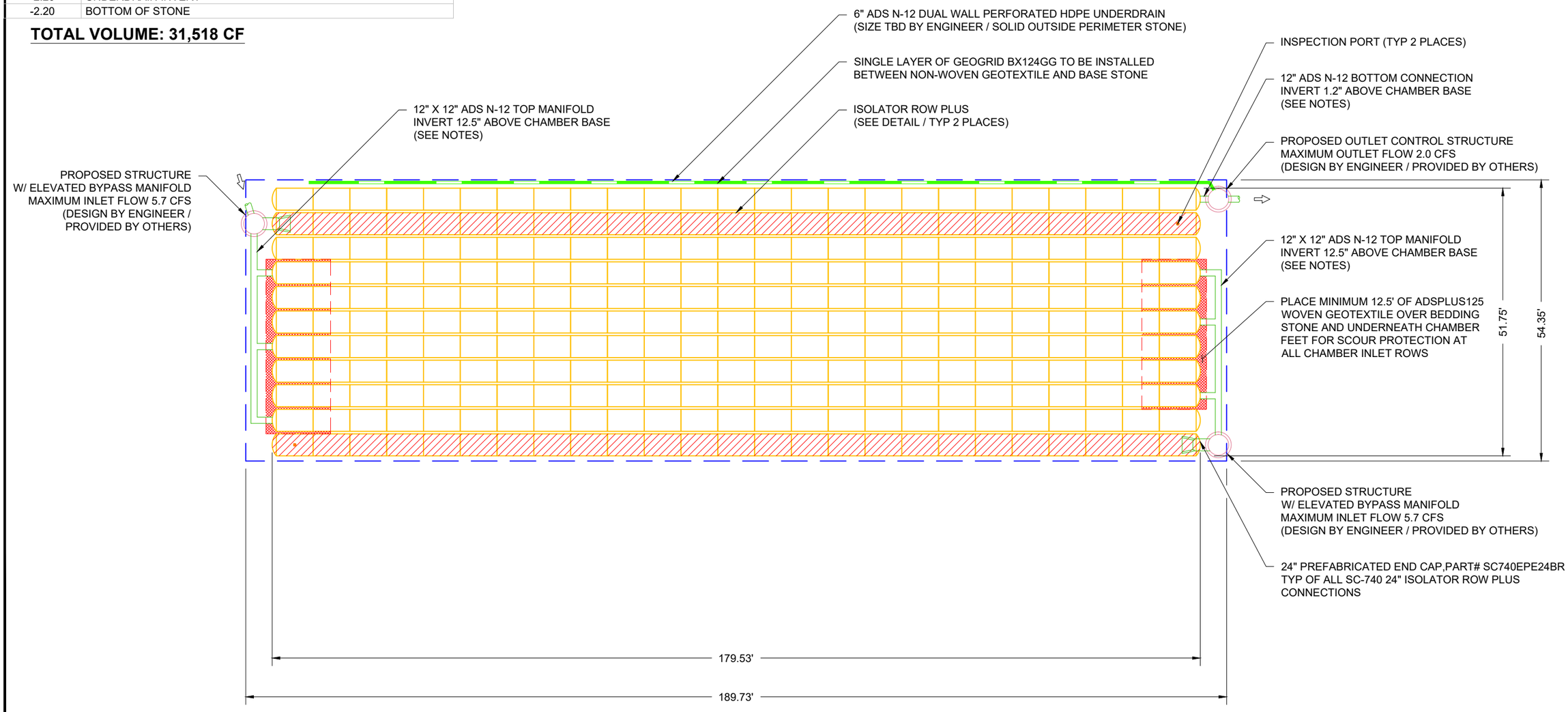

DETENTION BASINS 7 & 8
NEW ORLEANS, LA

DATE: 10/17/20 DRAWN: CJD
PROJECT #: S192224 CHECKED: CJD

DATE	DRWN	CHKD	DESCRIPTION
02/11/21	SLV	DHC	REVISED TO MEET NEW VOLUMES
01/22/21	DHC	ALI	ADDED GEOGRID BX124GG TO SYSTEM
01/13/21	DHC	N/A	REDUCED EAST BED
01/11/21	GDL	NAB	REDRAW SYSTEM
11/19/20	SLV	RWD	REVISED PER PLAN
10/21/20	SLV	NAB	REVISED BOTH BEDS, LOWERED WEST BED

StormTech
Detention+Retention+Water Quality
520 CROMWELL AVENUE | ROCKY HILL | CT | 06067
860-529-8188 | 888-892-2694 | WWW.STORMTECH.COM

ADS ADVANCED DRAINAGE SYSTEMS, INC.
4640 TRUEMAN BLVD
HILLIARD, OH 43026

0' 20' 40'

THIS DRAWING HAS BEEN PREPARED BASED ON INFORMATION PROVIDED TO ADS UNDER THE DIRECTION OF THE SITE DESIGN ENGINEER OR OTHER PROJECT REPRESENTATIVE. THE SITE DESIGN ENGINEER SHALL REVIEW THIS DRAWING PRIOR TO CONSTRUCTION. IT IS THE ULTIMATE RESPONSIBILITY OF THE SITE DESIGN ENGINEER TO ENSURE THAT THE PRODUCT(S) DEPICTED AND ALL ASSOCIATED DETAILS MEET ALL APPLICABLE LAWS, REGULATIONS, AND PROJECT REQUIREMENTS.

PROPOSED LAYOUT - SOUTH BED

126	STORMTECH SC-740 CHAMBERS
18	STORMTECH SC-740 END CAPS
6	STONE ABOVE (in)
6	STONE BELOW (in)
40	% STONE VOID
10316	**INSTALLED SYSTEM VOLUME (CF) (PERIMETER STONE INCLUDED)**
4887	SYSTEM AREA (ft²)
313	SYSTEM PERIMETER (ft)

PROPOSED ELEVATIONS SOUTH BED

9.00	MAXIMUM ALLOWABLE GRADE (TOP OF PAVEMENT/UNPAVED)
3.00	MINIMUM ALLOWABLE GRADE (UNPAVED WITH TRAFFIC)
2.50	MINIMUM ALLOWABLE GRADE (UNPAVED NO TRAFFIC)
2.50	MINIMUM ALLOWABLE GRADE (BASE OF FLEXIBLE PAVEMENT)
2.50	MINIMUM ALLOWABLE GRADE (TOP OF RIGID PAVEMENT)
1.50	TOP OF STONE
1.00	TOP OF SC-740 CHAMBER
-0.75	15" TOP MANIFOLD INVERT
-1.39	15" BOTTOM CONNECTION INVERT
-1.49	24" ISOLATOR ROW PLUS CONNECTION INVERT
-1.50	BOTTOM OF SC-740 CHAMBER
-2.00	UNDERDRAIN INVERT
-2.00	BOTTOM OF STONE

TOTAL VOLUME: 31,518 CF

NOTES

- MANIFOLD SIZE TO BE DETERMINED BY SITE DESIGN ENGINEER. SEE TECHNICAL NOTE 6.32 FOR MANIFOLD SIZING GUIDANCE.
- DUE TO THE ADAPTATION OF THIS CHAMBER SYSTEM TO SPECIFIC SITE AND DESIGN CONSTRAINTS, IT MAY BE NECESSARY TO CUT AND COUPLE ADDITIONAL PIPE TO STANDARD MANIFOLD COMPONENTS IN THE FIELD.
- THIS CHAMBER SYSTEM WAS DESIGNED WITHOUT SITE-SPECIFIC INFORMATION ON SOIL CONDITIONS OR BEARING CAPACITY. THE SITE DESIGN ENGINEER IS RESPONSIBLE FOR DETERMINING THE SUITABILITY OF THE SOIL AND PROVIDING THE BEARING CAPACITY OF THE INSITU SOILS. THE BASE STONE DEPTH MAY BE INCREASED OR DECREASED ONCE THIS INFORMATION IS PROVIDED.

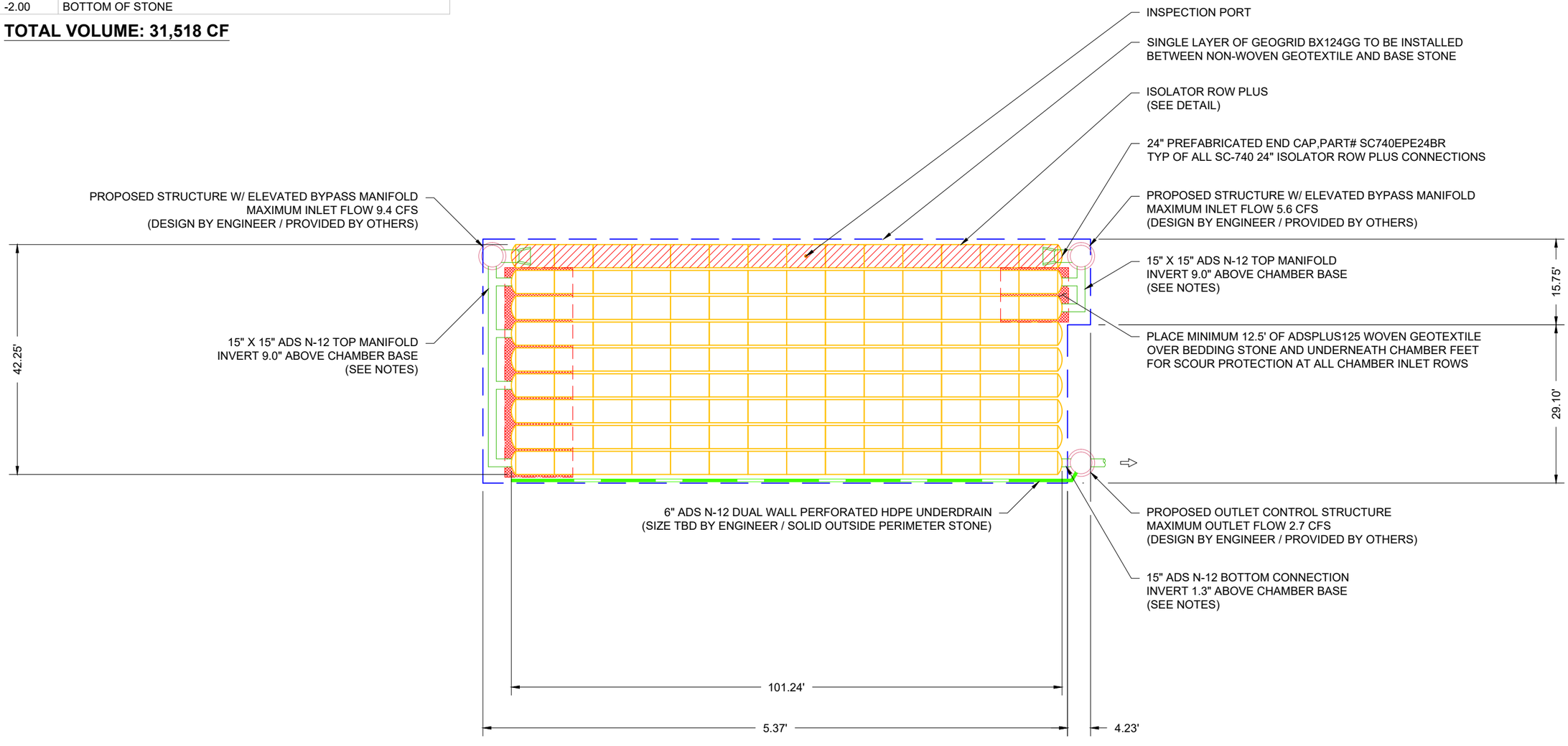

DETENTION BASINS 7 & 8
NEW ORLEANS, LA

DATE: 10/17/20 DRAWN: CJD
PROJECT #: S192224 CHECKED: CJD

DATE	DRWN	CHKD	DESCRIPTION
02/11/21	SLV	DHC	REVISED TO MEET NEW VOLUMES
01/22/21	DHC	ALI	ADDED GEOGRID BX124GG TO SYSTEM
01/13/21	DHC	N/A	REDUCED EAST BED
01/11/21	GDL	NAB	REDRAW SYSTEM
11/19/20	SLV	RWD	REVISED PER PLAN
10/21/20	SLV	NAB	REVISED BOTH BEDS, LOWERED WEST BED

StormTech
Detention • Retention • Water Quality
520 CROMWELL AVENUE | ROCKY HILL | CT | 06067
860-529-8188 | 888-892-2694 | WWW.STORMTECH.COM

ADS
ADVANCED DRAINAGE SYSTEMS, INC.
4640 TRUEMAN BLVD
HILLIARD, OH 43026

0' 20' 40'

THIS DRAWING HAS BEEN PREPARED BASED ON INFORMATION PROVIDED TO ADS UNDER THE DIRECTION OF THE SITE DESIGN ENGINEER OR OTHER PROJECT REPRESENTATIVE. THE SITE DESIGN ENGINEER SHALL REVIEW THIS DRAWING PRIOR TO CONSTRUCTION. IT IS THE ULTIMATE RESPONSIBILITY OF THE SITE DESIGN ENGINEER TO ENSURE THAT THE PRODUCT(S) DEPICTED AND ALL ASSOCIATED DETAILS MEET ALL APPLICABLE LAWS, REGULATIONS, AND PROJECT REQUIREMENTS.

ACCEPTABLE FILL MATERIALS: STORMTECH SC-740 CHAMBER SYSTEMS

MATERIAL LOCATION		DESCRIPTION	AASHTO MATERIAL CLASSIFICATIONS	COMPACTION / DENSITY REQUIREMENT
D	**FINAL FILL:** FILL MATERIAL FOR LAYER 'D' STARTS FROM THE TOP OF THE 'C' LAYER TO THE BOTTOM OF FLEXIBLE PAVEMENT OR UNPAVED FINISHED GRADE ABOVE. NOTE THAT PAVEMENT SUBBASE MAY BE PART OF THE 'D' LAYER.	ANY SOIL/ROCK MATERIALS, NATIVE SOILS, OR PER ENGINEER'S PLANS. CHECK PLANS FOR PAVEMENT SUBGRADE REQUIREMENTS.	N/A	PREPARE PER SITE DESIGN ENGINEER'S PLANS. PAVED INSTALLATIONS MAY HAVE STRINGENT MATERIAL AND PREPARATION REQUIREMENTS.
C	**INITIAL FILL:** FILL MATERIAL FOR LAYER 'C' STARTS FROM THE TOP OF THE EMBEDMENT STONE ('B' LAYER) TO 18" (450 mm) ABOVE THE TOP OF THE CHAMBER. NOTE THAT PAVEMENT SUBBASE MAY BE A PART OF THE 'C' LAYER.	GRANULAR WELL-GRADED SOIL/AGGREGATE MIXTURES, <35% FINES OR PROCESSED AGGREGATE. MOST PAVEMENT SUBBASE MATERIALS CAN BE USED IN LIEU OF THIS LAYER.	AASHTO M145[1] A-1, A-2-4, A-3 OR AASHTO M43[1] 3, 357, 4, 467, 5, 56, 57, 6, 67, 68, 7, 78, 8, 89, 9, 10	BEGIN COMPACTIONS AFTER 12" (300 mm) OF MATERIAL OVER THE CHAMBERS IS REACHED. COMPACT ADDITIONAL LAYERS IN 6" (150 mm) MAX LIFTS TO A MIN. 95% PROCTOR DENSITY FOR WELL GRADED MATERIAL AND 95% RELATIVE DENSITY FOR PROCESSED AGGREGATE MATERIALS. ROLLER GROSS VEHICLE WEIGHT NOT TO EXCEED 12,000 lbs (53 kN). DYNAMIC FORCE NOT TO EXCEED 20,000 lbs (89 kN).
B	**EMBEDMENT STONE:** FILL SURROUNDING THE CHAMBERS FROM THE FOUNDATION STONE ('A' LAYER) TO THE 'C' LAYER ABOVE.	CLEAN, CRUSHED, ANGULAR STONE	AASHTO M43[1] 3, 357, 4, 467, 5, 56, 57	NO COMPACTION REQUIRED.
A	**FOUNDATION STONE:** FILL BELOW CHAMBERS FROM THE SUBGRADE UP TO THE FOOT (BOTTOM) OF THE CHAMBER.	CLEAN, CRUSHED, ANGULAR STONE	AASHTO M43[1] 3, 357, 4, 467, 5, 56, 57	PLATE COMPACT OR ROLL TO ACHIEVE A FLAT SURFACE.[2,3]

PLEASE NOTE:
1. THE LISTED AASHTO DESIGNATIONS ARE FOR GRADATIONS ONLY. THE STONE MUST ALSO BE CLEAN, CRUSHED, ANGULAR. FOR EXAMPLE, A SPECIFICATION FOR #4 STONE WOULD STATE: "CLEAN, CRUSHED, ANGULAR NO. 4 (AASHTO M43) STONE".
2. STORMTECH COMPACTION REQUIREMENTS ARE MET FOR 'A' LOCATION MATERIALS WHEN PLACED AND COMPACTED IN 6" (150 mm) (MAX) LIFTS USING TWO FULL COVERAGES WITH A VIBRATORY COMPACTOR.
3. WHERE INFILTRATION SURFACES MAY BE COMPROMISED BY COMPACTION, FOR STANDARD DESIGN LOAD CONDITIONS, A FLAT SURFACE MAY BE ACHIEVED BY RAKING OR DRAGGING WITHOUT COMPACTION EQUIPMENT. FOR SPECIAL LOAD DESIGNS, CONTACT STORMTECH FOR COMPACTION REQUIREMENTS.
4. ONCE LAYER 'C' IS PLACED, ANY SOIL/MATERIAL CAN BE PLACED IN LAYER 'D' UP TO THE FINISHED GRADE. MOST PAVEMENT SUBBASE SOILS CAN BE USED TO REPLACE THE MATERIAL REQUIREMENTS OF LAYER 'C' OR 'D' AT THE SITE DESIGN ENGINEER'S DISCRETION.

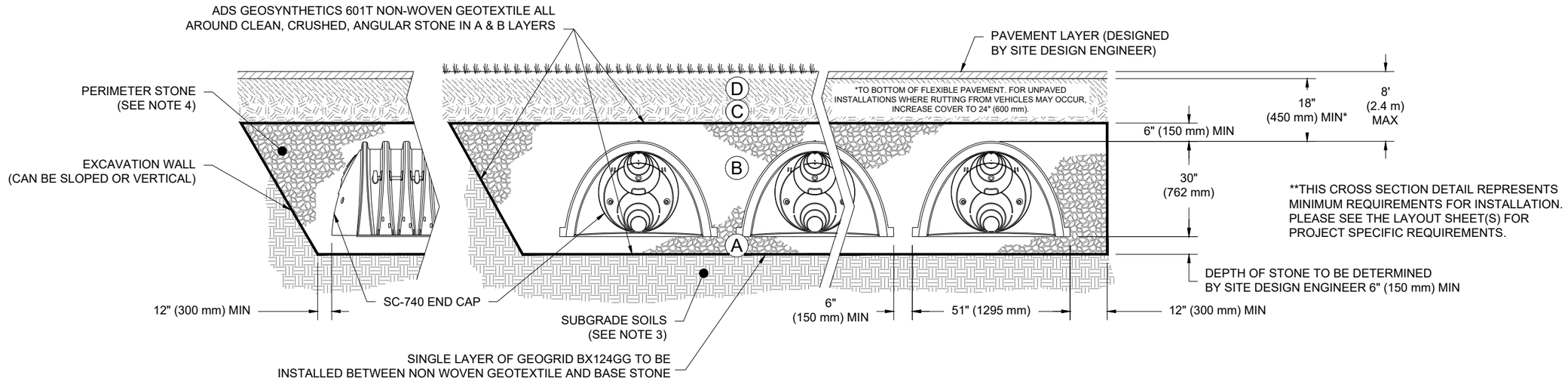

NOTES:

1. CHAMBERS SHALL MEET THE REQUIREMENTS OF ASTM F2418-16a, "STANDARD SPECIFICATION FOR POLYPROPYLENE (PP) CORRUGATED WALL STORMWATER COLLECTION CHAMBERS".
2. SC-740 CHAMBERS SHALL BE DESIGNED IN ACCORDANCE WITH ASTM F2787 "STANDARD PRACTICE FOR STRUCTURAL DESIGN OF THERMOPLASTIC CORRUGATED WALL STORMWATER COLLECTION CHAMBERS".
3. THE SITE DESIGN ENGINEER IS RESPONSIBLE FOR ASSESSING THE BEARING RESISTANCE (ALLOWABLE BEARING CAPACITY) OF THE SUBGRADE SOILS AND THE DEPTH OF FOUNDATION STONE WITH CONSIDERATION FOR THE RANGE OF EXPECTED SOIL MOISTURE CONDITIONS.
4. PERIMETER STONE MUST BE EXTENDED HORIZONTALLY TO THE EXCAVATION WALL FOR BOTH VERTICAL AND SLOPED EXCAVATION WALLS.
5. REQUIREMENTS FOR HANDLING AND INSTALLATION:
   - TO MAINTAIN THE WIDTH OF CHAMBERS DURING SHIPPING AND HANDLING, CHAMBERS SHALL HAVE INTEGRAL, INTERLOCKING STACKING LUGS.
   - TO ENSURE A SECURE JOINT DURING INSTALLATION AND BACKFILL, THE HEIGHT OF THE CHAMBER JOINT SHALL NOT BE LESS THAN 2".
   - TO ENSURE THE INTEGRITY OF THE ARCH SHAPE DURING INSTALLATION, a) THE ARCH STIFFNESS CONSTANT AS DEFINED IN SECTION 6.2.8 OF ASTM F2418 SHALL BE GREATER THAN OR EQUAL TO 550 LBS/IN/IN. AND b) TO RESIST CHAMBER DEFORMATION DURING INSTALLATION AT ELEVATED TEMPERATURES (ABOVE 73° F / 23° C), CHAMBERS SHALL BE PRODUCED FROM REFLECTIVE GOLD OR YELLOW COLORS.

DETENTION BASINS 7 & 8
NEW ORLEANS, LA
DATE: 10/17/20 DRAWN: CJD
PROJECT #: S192224 CHECKED: CJD

DRWN	CHKD	DESCRIPTION	DATE
SLV	DHC	REVISED TO MEET NEW VOLUMES	02/11/21
DHC	ALI	ADDED GEOGRID BX124GG TO SYSTEM	01/22/21
DHC	N/A	REDUCED EAST BED	01/13/21
GDL	NAB	REDRAW SYSTEM	01/11/21
SLV	RWD	REVISED PER PLAN	11/19/20
SLV	NAB	REVISED BOTH BEDS, LOWERED WEST BED	10/21/20

StormTech
Detention•Retention•Water Quality
520 CROMWELL AVENUE | ROCKY HILL | CT | 06067
860-529-8188 | 888-892-2694 | WWW.STORMTECH.COM

ADS
ADVANCED DRAINAGE SYSTEMS, INC.
4640 TRUEMAN BLVD
HILLIARD, OH 43026

THIS DRAWING HAS BEEN PREPARED BASED ON INFORMATION PROVIDED TO ADS UNDER THE DIRECTION OF THE SITE DESIGN ENGINEER OR OTHER PROJECT REPRESENTATIVE. THE SITE DESIGN ENGINEER SHALL REVIEW THIS DRAWING PRIOR TO CONSTRUCTION. IT IS THE ULTIMATE RESPONSIBILITY OF THE SITE DESIGN ENGINEER TO ENSURE THAT THE PRODUCT(S) DEPICTED AND ALL ASSOCIATED DETAILS MEET ALL APPLICABLE LAWS, REGULATIONS, AND PROJECT REQUIREMENTS.

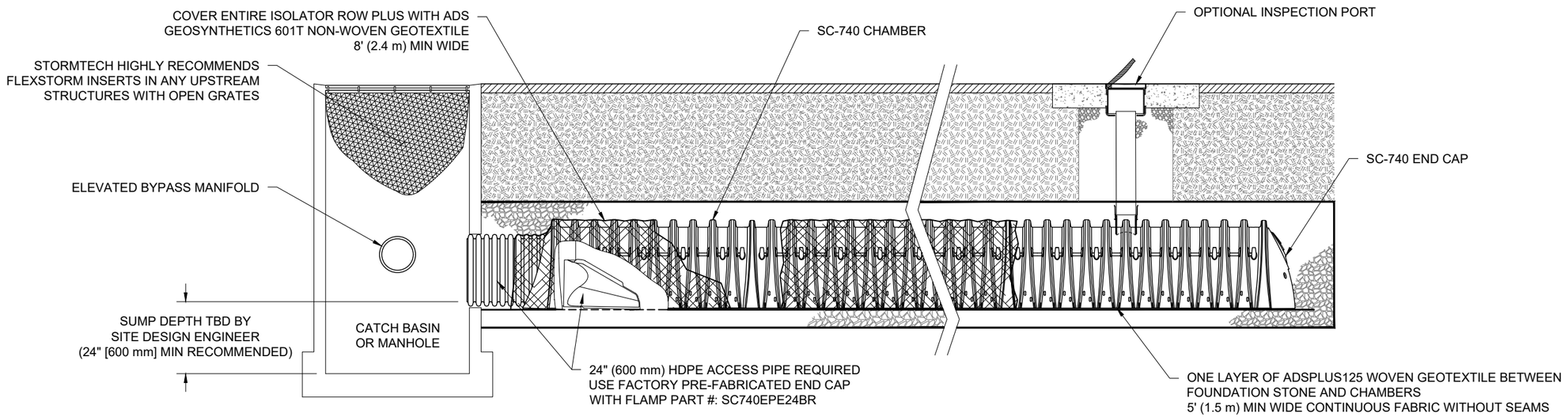

SC-740 ISOLATOR ROW PLUS DETAIL
NTS

INSPECTION & MAINTENANCE

STEP 1) INSPECT ISOLATOR ROW PLUS FOR SEDIMENT
- A. INSPECTION PORTS (IF PRESENT)
  - A.1. REMOVE/OPEN LID ON NYLOPLAST INLINE DRAIN
  - A.2. REMOVE AND CLEAN FLEXSTORM FILTER IF INSTALLED
  - A.3. USING A FLASHLIGHT AND STADIA ROD, MEASURE DEPTH OF SEDIMENT AND RECORD ON MAINTENANCE LOG
  - A.4. LOWER A CAMERA INTO ISOLATOR ROW PLUS FOR VISUAL INSPECTION OF SEDIMENT LEVELS (OPTIONAL)
  - A.5. IF SEDIMENT IS AT, OR ABOVE, 3" (80 mm) PROCEED TO STEP 2. IF NOT, PROCEED TO STEP 3.
- B. ALL ISOLATOR PLUS ROWS
  - B.1. REMOVE COVER FROM STRUCTURE AT UPSTREAM END OF ISOLATOR ROW PLUS
  - B.2. USING A FLASHLIGHT, INSPECT DOWN THE ISOLATOR ROW PLUS THROUGH OUTLET PIPE
    - i) MIRRORS ON POLES OR CAMERAS MAY BE USED TO AVOID A CONFINED SPACE ENTRY
    - ii) FOLLOW OSHA REGULATIONS FOR CONFINED SPACE ENTRY IF ENTERING MANHOLE
  - B.3. IF SEDIMENT IS AT, OR ABOVE, 3" (80 mm) PROCEED TO STEP 2. IF NOT, PROCEED TO STEP 3.

STEP 2) CLEAN OUT ISOLATOR ROW PLUS USING THE JETVAC PROCESS
- A. A FIXED CULVERT CLEANING NOZZLE WITH REAR FACING SPREAD OF 45" (1.1 m) OR MORE IS PREFERRED
- B. APPLY MULTIPLE PASSES OF JETVAC UNTIL BACKFLUSH WATER IS CLEAN
- C. VACUUM STRUCTURE SUMP AS REQUIRED

STEP 3) REPLACE ALL COVERS, GRATES, FILTERS, AND LIDS; RECORD OBSERVATIONS AND ACTIONS.

STEP 4) INSPECT AND CLEAN BASINS AND MANHOLES UPSTREAM OF THE STORMTECH SYSTEM.

NOTES

1. INSPECT EVERY 6 MONTHS DURING THE FIRST YEAR OF OPERATION. ADJUST THE INSPECTION INTERVAL BASED ON PREVIOUS OBSERVATIONS OF SEDIMENT ACCUMULATION AND HIGH WATER ELEVATIONS.
2. CONDUCT JETTING AND VACTORING ANNUALLY OR WHEN INSPECTION SHOWS THAT MAINTENANCE IS NECESSARY.

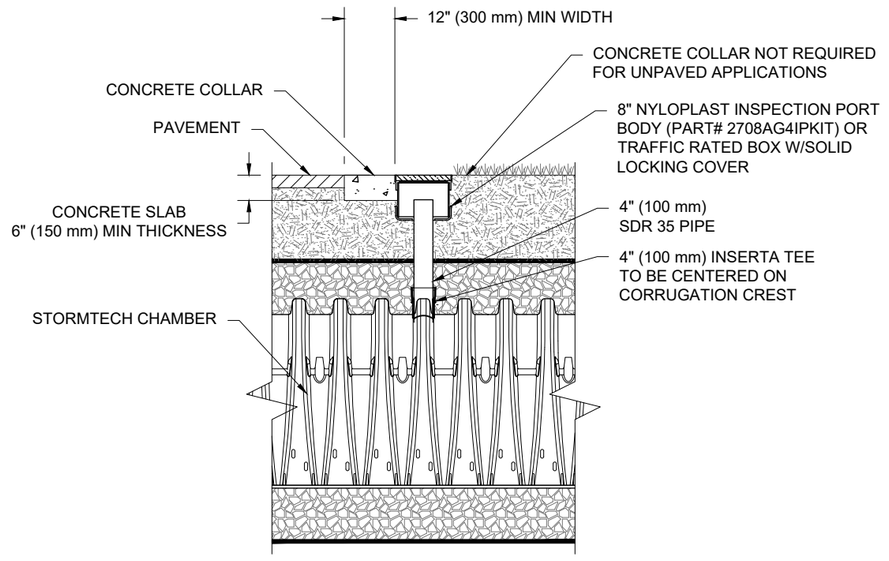

NOTE:
INSPECTION PORTS MAY BE CONNECTED THROUGH ANY CHAMBER CORRUGATION CREST.

4" PVC INSPECTION PORT DETAIL (SC SERIES CHAMBER)
NTS

DETENTION BASINS 7 & 8
NEW ORLEANS, LA

DATE: 10/17/20 DRAWN: CJD
PROJECT #: S192224 CHECKED: CJD

DATE	DRWN	CHKD	DESCRIPTION
02/11/21	SLV	DHC	REVISED TO MEET NEW VOLUMES
01/22/21	DHC	ALI	ADDED GEOGRID BX124GG TO SYSTEM
01/13/21	DHC	N/A	REDUCED EAST BED
01/11/21	GDL	NAB	REDRAW SYSTEM
11/19/20	SLV	RWD	REVISED PER PLAN
10/21/20	SLV	NAB	REVISED BOTH BEDS, LOWERED WEST BED

StormTech
Detention • Retention • Water Quality
520 CROMWELL AVENUE | ROCKY HILL | CT | 06067
860-529-8188 | 888-892-2694 | WWW.STORMTECH.COM

ADS
ADVANCED DRAINAGE SYSTEMS, INC.
4640 TRUEMAN BLVD
HILLIARD, OH 43026

THIS DRAWING HAS BEEN PREPARED BASED ON INFORMATION PROVIDED TO ADS UNDER THE DIRECTION OF THE SITE DESIGN ENGINEER OR OTHER PROJECT REPRESENTATIVE. THE SITE DESIGN ENGINEER SHALL REVIEW THIS DRAWING PRIOR TO CONSTRUCTION. IT IS THE ULTIMATE RESPONSIBILITY OF THE SITE DESIGN ENGINEER TO ENSURE THAT THE PRODUCT(S) DEPICTED AND ALL ASSOCIATED DETAILS MEET ALL APPLICABLE LAWS, REGULATIONS, AND PROJECT REQUIREMENTS.

UNDERDRAIN DETAIL

NTS

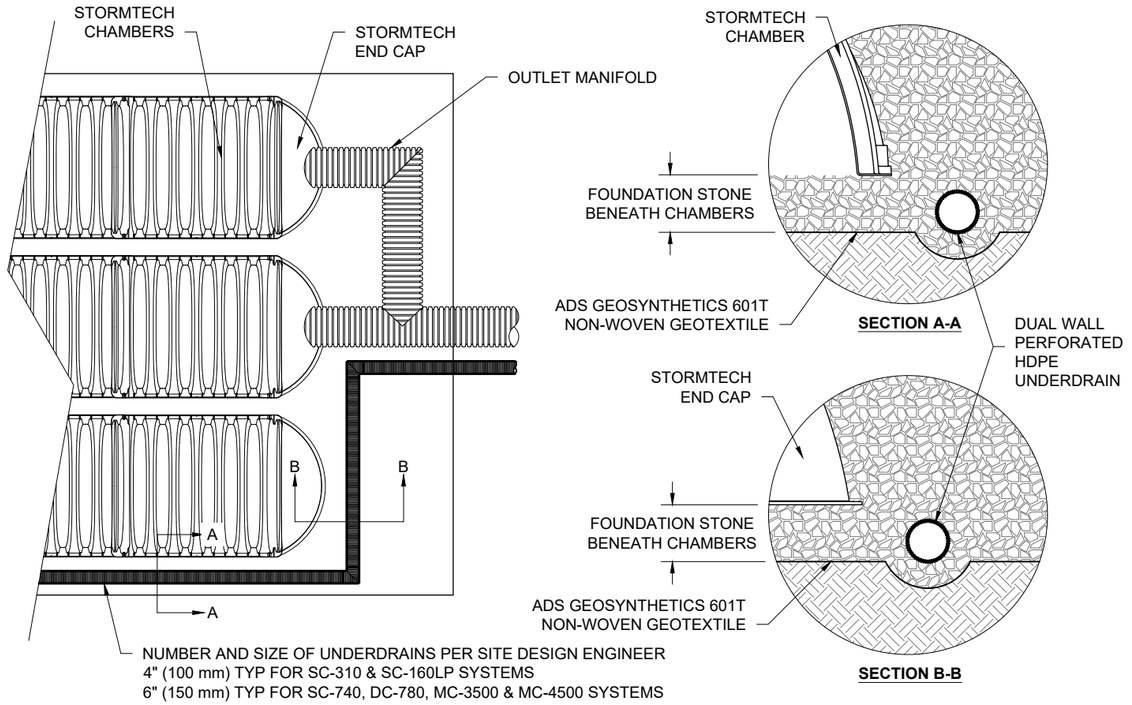

SC-740 TECHNICAL SPECIFICATION

NTS

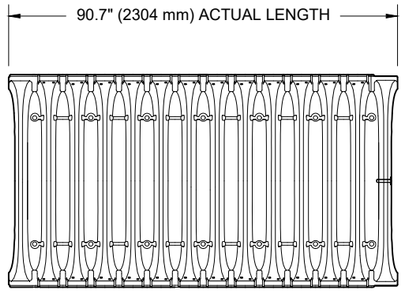

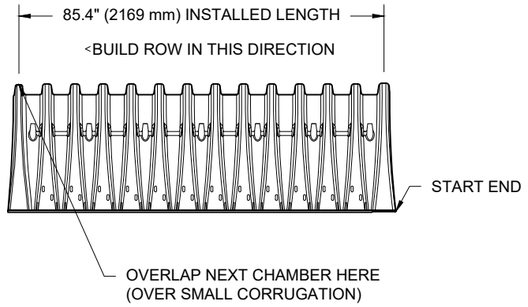

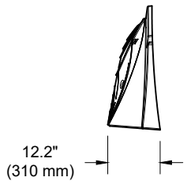

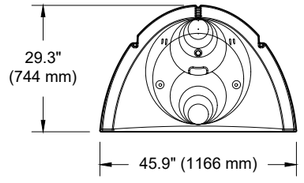

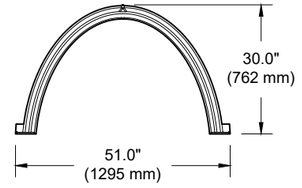

NOMINAL CHAMBER SPECIFICATIONS

SIZE (W X H X INSTALLED LENGTH)	51.0" X 30.0" X 85.4"	(1295 mm X 762 mm X 2169 mm)
CHAMBER STORAGE	45.9 CUBIC FEET	(1.30 m³)
MINIMUM INSTALLED STORAGE*	74.9 CUBIC FEET	(2.12 m³)
WEIGHT	75.0 lbs.	(33.6 kg)

*ASSUMES 6" (152 mm) STONE ABOVE, BELOW, AND BETWEEN CHAMBERS

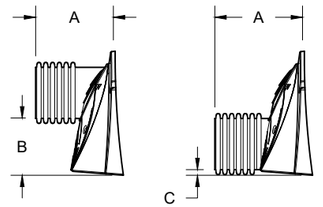

PRE-FAB STUB AT BOTTOM OF END CAP WITH FLAMP END WITH "BR"
PRE-FAB STUBS AT BOTTOM OF END CAP FOR PART NUMBERS ENDING WITH "B"
PRE-FAB STUBS AT TOP OF END CAP FOR PART NUMBERS ENDING WITH "T"
PRE-CORED END CAPS END WITH "PC"

PART #	STUB	A	B	C
SC740EPE06T / SC740EPE06TPC	6" (150 mm)	10.9" (277 mm)	18.5" (470 mm)	---
SC740EPE06B / SC740EPE06BPC			---	0.5" (13 mm)
SC740EPE08T /SC740EPE08TPC	8" (200 mm)	12.2" (310 mm)	16.5" (419 mm)	---
SC740EPE08B / SC740EPE08BPC			---	0.6" (15 mm)
SC740EPE10T / SC740EPE10TPC	10" (250 mm)	13.4" (340 mm)	14.5" (368 mm)	---
SC740EPE10B / SC740EPE10BPC			---	0.7" (18 mm)
SC740EPE12T / SC740EPE12TPC	12" (300 mm)	14.7" (373 mm)	12.5" (318 mm)	---
SC740EPE12B / SC740EPE12BPC			---	1.2" (30 mm)
SC740EPE15T / SC740EPE15TPC	15" (375 mm)	18.4" (467 mm)	9.0" (229 mm)	---
SC740EPE15B / SC740EPE15BPC			---	1.3" (33 mm)
SC740EPE18T / SC740EPE18TPC	18" (450 mm)	19.7" (500 mm)	5.0" (127 mm)	---
SC740EPE18B / SC740EPE18BPC			---	1.6" (41 mm)
SC740EPE24B*	24" (600 mm)	18.5" (470 mm)	---	0.1" (3 mm)
SC740EPE24BR*	24" (600 mm)	18.5" (470 mm)	---	0.1" (3 mm)

ALL STUBS, EXCEPT FOR THE SC740EPE24B/SC740EPE24BR ARE PLACED AT BOTTOM OF END CAP SUCH THAT THE OUTSIDE DIAMETER OF THE STUB IS FLUSH WITH THE BOTTOM OF THE END CAP. FOR ADDITIONAL INFORMATION CONTACT STORMTECH AT 1-888-892-2694.

* FOR THE SC740EPE24B/SC740EPE24BR THE 24" (600 mm) STUB LIES BELOW THE BOTTOM OF THE END CAP APPROXIMATELY 1.75" (44 mm). BACKFILL MATERIAL SHOULD BE REMOVED FROM BELOW THE N-12 STUB SO THAT THE FITTING SITS LEVEL.

NOTE: ALL DIMENSIONS ARE NOMINAL

DETENTION BASINS 7 & 8
NEW ORLEANS, LA

DATE: 10/17/20 DRAWN: CJD
PROJECT #: S192224 CHECKED: CJD

DATE	DRWN	CHKD	DESCRIPTION
02/11/21	SLV	DHC	REVISED TO MEET NEW VOLUMES
01/22/21	DHC	ALI	ADDED GEOGRID BX12GG TO SYSTEM
01/13/21	DHC	N/A	REDUCED EAST BED
01/11/21	GDL	NAB	REDRAW SYSTEM
11/19/20	SLV	RWD	REVISED PER PLAN
10/21/20	SLV	NAB	REVISED BOTH BEDS, LOWERED WEST BED

StormTech
Detention • Retention • Water Quality
520 CROMWELL AVENUE | ROCKY HILL | CT | 06067
860-529-8188 | 888-892-2694 | WWW.STORMTECH.COM

ADS
ADVANCED DRAINAGE SYSTEMS, INC.
4640 TRUEMAN BLVD
HILLIARD, OH 43026

THIS DRAWING HAS BEEN PREPARED BASED ON INFORMATION PROVIDED TO ADS UNDER THE DIRECTION OF THE SITE DESIGN ENGINEER OR OTHER PROJECT REPRESENTATIVE. THE SITE DESIGN ENGINEER SHALL REVIEW THIS DRAWING PRIOR TO CONSTRUCTION. IT IS THE ULTIMATE RESPONSIBILITY OF THE SITE DESIGN ENGINEER TO ENSURE THAT THE PRODUCT(S) DEPICTED AND ALL ASSOCIATED DETAILS MEET ALL APPLICABLE LAWS, REGULATIONS, AND PROJECT REQUIREMENTS.

CENTERLINE OF LEVEE

TOP OF SLOPE

TOE OF SLOPE

REQ'D 150'
15" SDP

REQ'D ACCESS
MANHOLE
TOP: 2.67
INV.: -1.85

REQ'D CMP RISER
W/ ACCESS COVER
TOP: 2.50
INV.: -2.00

REQ'D CMP RISER
W/ GRATE INLET
TOP: 2.00
INV.: -2.00

REQ'D CMP DETENTION SYSTEM
CONTECH OR APPROVED EQUAL
MIN. STORAGE VOLUME 10,000
CU.FT.

REQ'D CMP RISER
W/ GRATE INLET
TOP: 2.00
INV.: -2.00

REQ'D CMP RISER
W/ ACCESS COVER
TOP: 2.50
INV.: -2.00

REQ'D OUTLET CONTROL
8.5"ø ORIFICE PLATE
INV.: -2.00

D.A. = 2.1 AC.

C-7/L-4 WAL

REQ'D OUTLET CONTROL
7"ø ORIFICE PLATE
INV.: -1.70

REQ'D CMP RISER
W/ ACCESS COVER
TOP: 2.67
INV.: -1.70

REQ'D CMP RISER
W/ ACCESS COVER
TOP: 2.50
INV.: -1.70

REQ'D 150'
15" SDP

REQ'D CMP RISER
W/ GRATE INLET
TOP: 2.30
INV.: -1.70

REQ'D CMP RISER
W/ GRATE INLET
TOP: 2.30
INV.: -1.70

REQ'D CMP RISER
W/ GRATE INLET
TOP: 2.30
INV.: -1.70

REQ'D 72'
15" SDP

REQ'D CMP DETENTION SYSTEM
CONTECH OR APPROVED EQUAL
MIN. STORAGE VOLUME 20,000
CU.FT.

2.5 PROPOSED STORM DRAINAGE CONDITIONS NARRATIVE

Site Location:

See section 1.4 (no change)

Site Size:

See section 1.4 (no change)

Adjacent Property:

See section 1.4 (no change)

Proposed Topography, Land Cover Type, & Structures:

The proposed site will include a new energy substation, corresponding equipment, operations building, SFC areas and an access road through the site. The site will be graded at a 0.50% slope and will all drain to the

Proposed Drainage Infrastructure:

The two existing underground stormwater detention systems will remain as a part of the proposed drainage infrastructure. For the permit storm (10-year, 24-hour), all stormwater will either be infiltrated or collected in the CMP detention systems and will controlled through the outlet by orifice control. The northern and southern beds will have a 30" RCP and 15" RCP overflow pipe, consecutively. They will then connect to a 30" RCP that discharges into an existing box culvert along Claiborne Avenue. This connection will only be utilized during storm events larger than the 10-year, 24-hour storm

- Top of Grate Elev., Inlets: +2.30 ft. (northern detention system) / +3.00 ft. (southern detention system)
- Invert, Storage Tanks: -1.7 ft. (northern detention system) / -2.00 ft. (southern detention system)
- Invert, Outflow Pipes: varies -1.70 ft. to -3.40 ft.
- Invert, Overflow Stand Pipe (Existing): -8.00 ft. (estimated)
- Invert, Emergency Overflow 30" RCP: varies -0.25' to -14.00'

3.1 RUNOFF CALCULATIONS

Pre-Development:

The pre-development runoff rate is **0.00 cfs** in the permit storm (10-Year, 24-Hour).

In storms larger than the permit storm, the runoff is routed through a detention tank and a control structures. The detention tank is designed for a 500-Year, 24-Hour storm using extrapolated precipitation data from the Louisiana Department of Transportation and Development (LaDOTD). However, available data from NOAA is more conservative than the LaDOTD data; and according to NOAA precipitation data the design storm may be closer to a 150-year storm.

Post-Development:

The total post-development runoff rate will be **2.25 cfs** in the permit storm (10-Year, 24-Hour). This is the combined runoff of the northern drainage area (0.98 gpm) and the southern drainage area (1.34 gpm). This increase in runoff from the pre-development runoff rate is a result of the increase in impervious areas throughout the proposed site. For the permit storm, all runoff that is not infiltrated will be routed into the detention systems and discharged through the orifice controls.

In storms larger than the permit storm, the runoff will be routed through a 30” RCP that ties into a box culvert on Claiborne Avenue.

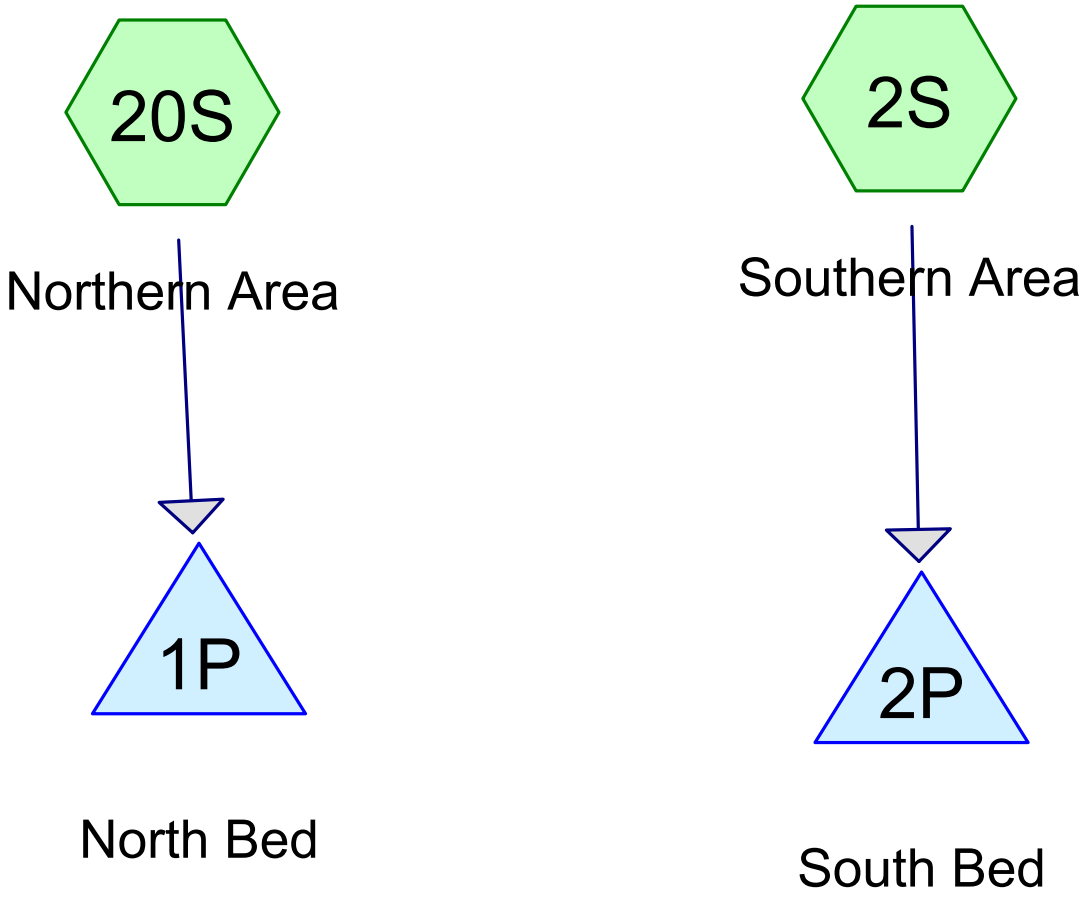

Subcat Reach Pond Link

Routing Diagram for Power Complex Drainage- original
Prepared by Volkert Inc, Printed 6/14/2022
HydroCAD® 10.20-2d s/n 05267 © 2021 HydroCAD Software Solutions LLC

Rainfall Events Listing (selected events)

Event#	Event Name	Storm Type	Curve	Mode	Duration (hours)	B/B	Depth (inches)	AMC
1	10-Year	Type III 24-hr		Default	24.00	1	7.80	2
2	100-Year	Type III 24-hr		Default	24.00	1	12.60	2
3	500-Year	Type III 24-hr		Default	24.00	1	15.70	2

Area Listing (all nodes)

Area (sq-ft)	CN	Description (subcatchment-numbers)
55,408	98	(2S, 20S)
246,898	40	(2S, 20S)
9,583	50	(2S, 20S)
311,890	**51**	**TOTAL AREA**

Soil Listing (all nodes)

Area (sq-ft)	Soil Group	Subcatchment Numbers
0	HSG A	
0	HSG B	
0	HSG C	
0	HSG D	
311,890	Other	2S, 20S
311,890		**TOTAL AREA**

Ground Covers (all nodes)

HSG-A (sq-ft)	HSG-B (sq-ft)	HSG-C (sq-ft)	HSG-D (sq-ft)	Other (sq-ft)	Total (sq-ft)	Ground Cover	Subcatchment Numbers
0	0	0	0	311,890	311,890		2S, 20S
0	**0**	**0**	**0**	**311,890**	**311,890**	**TOTAL AREA**	

Pipe Listing (all nodes)

Line#	Node Number	In-Invert (feet)	Out-Invert (feet)	Length (feet)	Slope (ft/ft)	n	Width (inches)	Diam/Height (inches)	Inside-Fill (inches)
1	1P	-0.25	-13.00	800.0	0.0159	0.013	0.0	30.0	0.0
2	2P	-0.75	-2.73	400.0	0.0049	0.013	0.0	15.0	0.0

Time span=0.00-30.00 hrs, dt=0.10 hrs, 301 points
Runoff by SCS TR-20 method, UH=SCS, Weighted-CN
Reach routing by Stor-Ind+Trans method - Pond routing by Stor-Ind method

Subcatchment 2S: Southern Area Runoff Area=1.840 ac 29.35% Impervious Runoff Depth=2.97"
Flow Length=350' Slope=0.0050 '/' Tc=49.6 min CN=58 Runoff=2.71 cfs 19,824 cf

Subcatchment 20S: Northern Area Runoff Area=5.320 ac 13.76% Impervious Runoff Depth=1.93"
Flow Length=350' Slope=0.0050 '/' Tc=49.6 min CN=48 Runoff=4.63 cfs 37,217 cf

Pond 1P: North Bed Peak Elev=-0.30' Storage=13,304 cf Inflow=4.63 cfs 37,217 cf
Primary=1.37 cfs 34,372 cf Secondary=0.00 cfs 0 cf Outflow=1.37 cfs 34,372 cf

Pond 2P: South Bed Peak Elev=-0.83' Storage=3,636 cf Inflow=2.71 cfs 19,824 cf
Primary=1.75 cfs 19,782 cf Secondary=0.00 cfs 0 cf Outflow=1.75 cfs 19,782 cf

Total Runoff Area = 311,890 sf Runoff Volume = 57,041 cf Average Runoff Depth = 2.19"
82.23% Pervious = 256,481 sf 17.77% Impervious = 55,408 sf

Summary for Subcatchment 2S: Southern Area

Runoff = 2.71 cfs @ 12.67 hrs, Volume= 19,824 cf, Depth= 2.97"
Routed to Pond 2P : South Bed

Runoff by SCS TR-20 method, UH=SCS, Weighted-CN, Time Span= 0.00-30.00 hrs, dt= 0.10 hrs
Type III 24-hr 10-Year Rainfall=7.80"

	Area (ac)	CN	Description
*	0.540	98	
*	1.190	40	
*	0.110	50	
	1.840	58	Weighted Average
	1.300		70.65% Pervious Area
	0.540		29.35% Impervious Area

Tc (min)	Length (feet)	Slope (ft/ft)	Velocity (ft/sec)	Capacity (cfs)	Description
48.9	300	0.0050	0.10		**Sheet Flow, Segment AB** Grass: Dense n= 0.240 P2= 4.80"
0.7	50	0.0050	1.14		**Shallow Concentrated Flow, Segment BC** Unpaved Kv= 16.1 fps
49.6	350	Total			

Subcatchment 2S: Southern Area

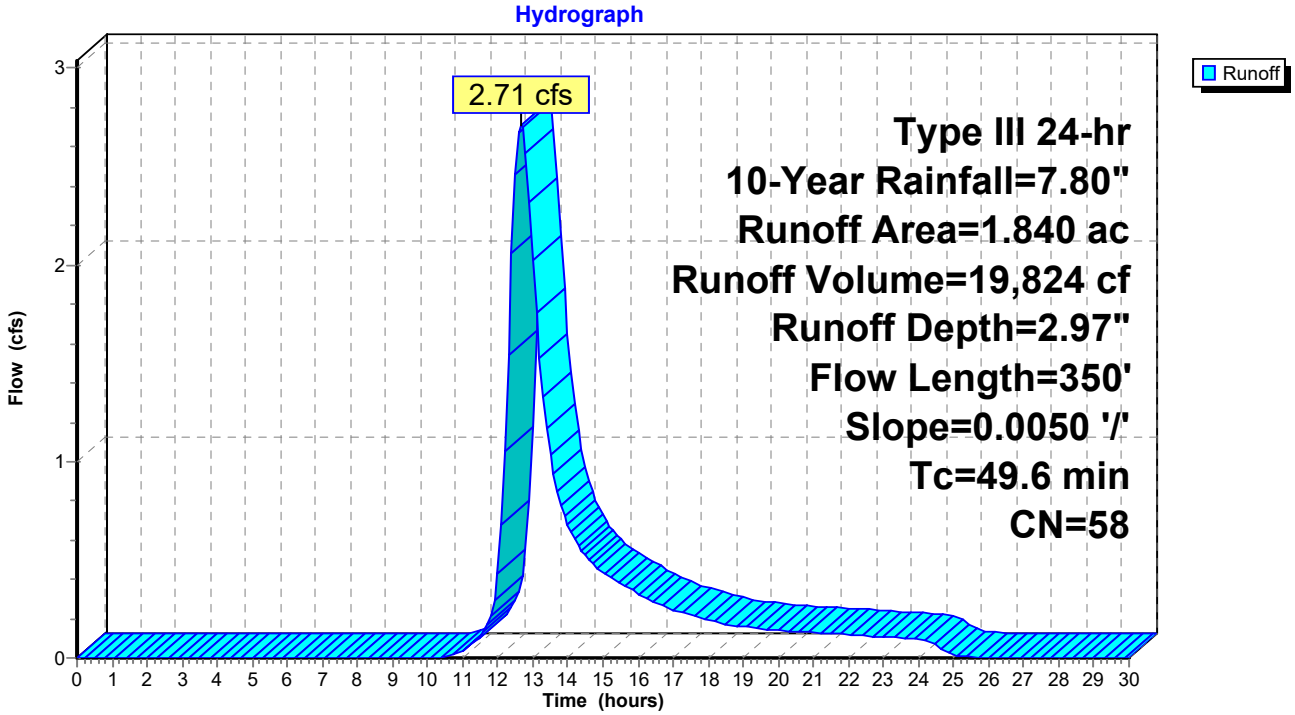

Hydrograph for Subcatchment 2S: Southern Area

Time (hours)	Precip. (inches)	Excess (inches)	Runoff (cfs)
0.00	0.00	0.00	0.00
0.50	0.04	0.00	0.00
1.00	0.08	0.00	0.00
1.50	0.12	0.00	0.00
2.00	0.16	0.00	0.00
2.50	0.20	0.00	0.00
3.00	0.24	0.00	0.00
3.50	0.29	0.00	0.00
4.00	0.34	0.00	0.00
4.50	0.39	0.00	0.00
5.00	0.44	0.00	0.00
5.50	0.50	0.00	0.00
6.00	0.56	0.00	0.00
6.50	0.63	0.00	0.00
7.00	0.71	0.00	0.00
7.50	0.79	0.00	0.00
8.00	0.89	0.00	0.00
8.50	1.00	0.00	0.00
9.00	1.14	0.00	0.00
9.50	1.29	0.00	0.00
10.00	1.47	0.00	0.00
10.50	1.69	0.01	0.01
11.00	1.95	0.03	0.04
11.50	2.32	0.09	0.11
12.00	3.90	0.62	0.43
12.50	5.48	1.44	**2.46**
13.00	5.85	1.66	**2.03**
13.50	6.11	1.83	1.04
14.00	6.33	1.96	0.68
14.50	6.51	2.08	0.52
15.00	6.66	2.18	0.44
15.50	6.80	2.27	0.38
16.00	6.91	2.35	0.33
16.50	7.01	2.41	0.28
17.00	7.09	2.47	0.24
17.50	7.17	2.53	0.22
18.00	7.24	2.57	0.19
18.50	7.30	2.61	0.17
19.00	7.36	2.66	0.16
19.50	7.41	2.69	0.15
20.00	7.46	2.73	0.14
20.50	7.51	2.77	0.14
21.00	7.56	2.80	0.13
21.50	7.61	2.83	0.12
22.00	7.65	2.86	0.12
22.50	7.69	2.89	0.11
23.00	7.73	2.92	0.11
23.50	7.77	2.94	0.10
24.00	**7.80**	**2.97**	0.10
24.50	7.80	2.97	0.06
25.00	7.80	2.97	0.02
25.50	7.80	2.97	0.00
26.00	7.80	2.97	0.00
26.50	7.80	2.97	0.00
27.00	7.80	2.97	0.00
27.50	7.80	2.97	0.00
28.00	7.80	2.97	0.00
28.50	7.80	2.97	0.00
29.00	7.80	2.97	0.00
29.50	7.80	2.97	0.00
30.00	7.80	2.97	0.00

Summary for Subcatchment 20S: Northern Area

Runoff = 4.63 cfs @ 12.72 hrs, Volume= 37,217 cf, Depth= 1.93"
Routed to Pond 1P : North Bed

Runoff by SCS TR-20 method, UH=SCS, Weighted-CN, Time Span= 0.00-30.00 hrs, dt= 0.10 hrs
Type III 24-hr 10-Year Rainfall=7.80"

	Area (ac)	CN	Description
*	0.732	98	
*	4.478	40	
*	0.110	50	
	5.320	48	Weighted Average
	4.588		86.24% Pervious Area
	0.732		13.76% Impervious Area

Tc (min)	Length (feet)	Slope (ft/ft)	Velocity (ft/sec)	Capacity (cfs)	Description
48.9	300	0.0050	0.10		**Sheet Flow, Segment AB** Grass: Dense n= 0.240 P2= 4.80"
0.7	50	0.0050	1.14		**Shallow Concentrated Flow, Segment BC** Unpaved Kv= 16.1 fps
49.6	350	Total			

Subcatchment 20S: Northern Area

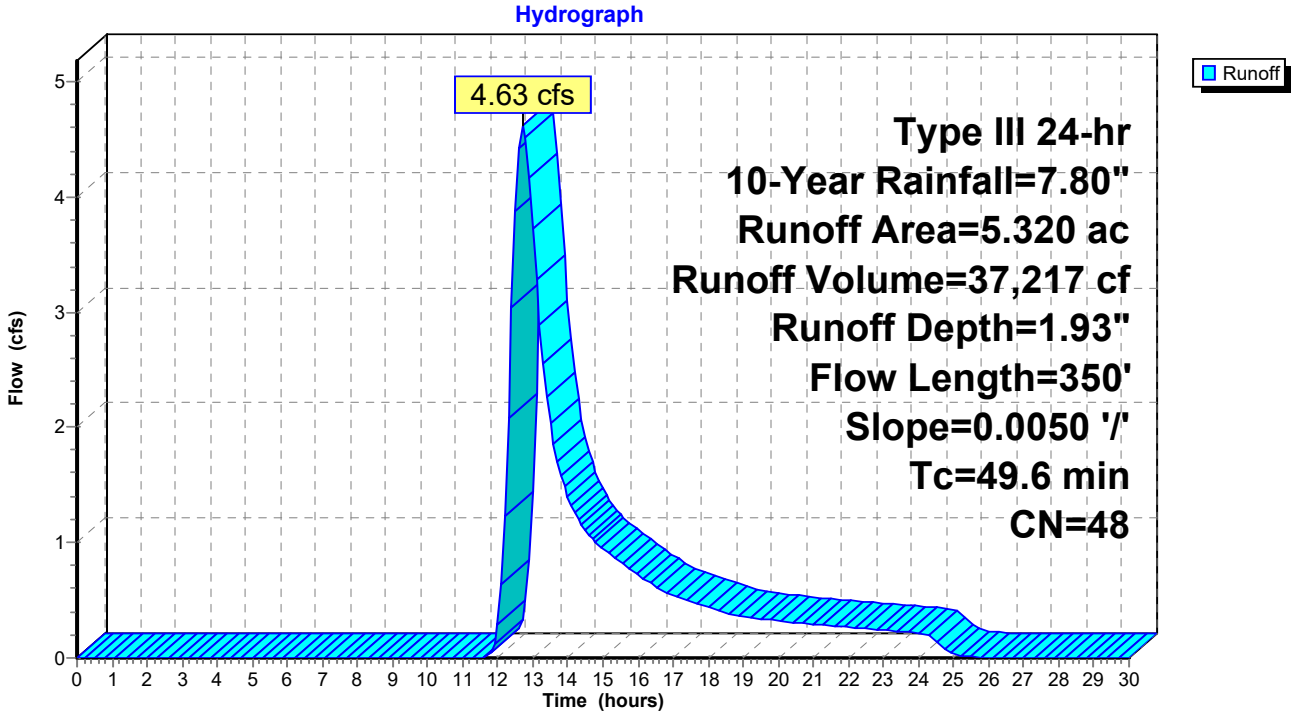

Hydrograph for Subcatchment 20S: Northern Area

Time (hours)	Precip. (inches)	Excess (inches)	Runoff (cfs)
0.00	0.00	0.00	0.00
0.50	0.04	0.00	0.00
1.00	0.08	0.00	0.00
1.50	0.12	0.00	0.00
2.00	0.16	0.00	0.00
2.50	0.20	0.00	0.00
3.00	0.24	0.00	0.00
3.50	0.29	0.00	0.00
4.00	0.34	0.00	0.00
4.50	0.39	0.00	0.00
5.00	0.44	0.00	0.00
5.50	0.50	0.00	0.00
6.00	0.56	0.00	0.00
6.50	0.63	0.00	0.00
7.00	0.71	0.00	0.00
7.50	0.79	0.00	0.00
8.00	0.89	0.00	0.00
8.50	1.00	0.00	0.00
9.00	1.14	0.00	0.00
9.50	1.29	0.00	0.00
10.00	1.47	0.00	0.00
10.50	1.69	0.00	0.00
11.00	1.95	0.00	0.00
11.50	2.32	0.00	0.00
12.00	3.90	0.24	0.28
12.50	5.48	0.77	**3.87**
13.00	5.85	0.93	**3.72**
13.50	6.11	1.05	2.04
14.00	6.33	1.15	1.40
14.50	6.51	1.24	1.11
15.00	6.66	1.32	0.94
15.50	6.80	1.39	0.83
16.00	6.91	1.44	0.72
16.50	7.01	1.49	0.62
17.00	7.09	1.54	0.54
17.50	7.17	1.58	0.49
18.00	7.24	1.62	0.43
18.50	7.30	1.65	0.39
19.00	7.36	1.68	0.36
19.50	7.41	1.71	0.34
20.00	7.46	1.74	0.32
20.50	7.51	1.77	0.31
21.00	7.56	1.79	0.29
21.50	7.61	1.82	0.28
22.00	7.65	1.84	0.27
22.50	7.69	1.87	0.26
23.00	7.73	1.89	0.24
23.50	7.77	1.91	0.23
24.00	**7.80**	**1.93**	0.22
24.50	7.80	1.93	0.15
25.00	7.80	1.93	0.04
25.50	7.80	1.93	0.01
26.00	7.80	1.93	0.00
26.50	7.80	1.93	0.00
27.00	7.80	1.93	0.00
27.50	7.80	1.93	0.00
28.00	7.80	1.93	0.00
28.50	7.80	1.93	0.00
29.00	7.80	1.93	0.00
29.50	7.80	1.93	0.00
30.00	7.80	1.93	0.00

Summary for Pond 1P: North Bed

Inflow Area = 231,739 sf, 13.76% Impervious, Inflow Depth = 1.93" for 10-Year event
Inflow = 4.63 cfs @ 12.72 hrs, Volume= 37,217 cf
Outflow = 1.37 cfs @ 14.04 hrs, Volume= 34,372 cf, Atten= 70%, Lag= 79.2 min
Primary = 1.37 cfs @ 14.04 hrs, Volume= 34,372 cf
Secondary = 0.00 cfs @ 0.00 hrs, Volume= 0 cf

Routing by Stor-Ind method, Time Span= 0.00-30.00 hrs, dt= 0.10 hrs
Peak Elev= -0.30' @ 14.04 hrs Surf.Area= 10,312 sf Storage= 13,304 cf

Plug-Flow detention time= 164.2 min calculated for 34,257 cf (92% of inflow)
Center-of-Mass det. time= 126.8 min (1,042.8 - 916.0)

Volume	Invert	Avail.Storage	Storage Description
#1	-2.20'	9,383 cf	**54.35'W x 189.73'L x 3.50'H Prismatoid** 36,091 cf Overall - 12,634 cf Embedded = 23,458 cf x 40.0% Voids
#2	-1.70'	12,634 cf	**ADS_StormTech SC-740 +Cap** x 275 Inside #1 Effective Size= 44.6"W x 30.0"H => 6.45 sf x 7.12'L = 45.9 cf Overall Size= 51.0"W x 30.0"H x 7.56'L with 0.44' Overlap 275 Chambers in 11 Rows
		22,017 cf	Total Available Storage

Device	Routing	Invert	Outlet Devices
#1	Primary	-1.70'	**7.0" Vert. Orifice/Grate** C= 0.610 Limited to weir flow at low heads
#2	Secondary	-0.25'	**30.0" Round Culvert** L= 800.0' RCP, rounded edge headwall, Ke= 0.100 Inlet / Outlet Invert= -0.25' / -13.00' S= 0.0159 '/' Cc= 0.900 n= 0.013 Concrete pipe, bends & connections, Flow Area= 4.91 sf

Primary OutFlow Max=1.37 cfs @ 14.04 hrs HW=-0.30' (Free Discharge)
↑—**1=Orifice/Grate** (Orifice Controls 1.37 cfs @ 5.14 fps)

Secondary OutFlow Max=0.00 cfs @ 0.00 hrs HW=-2.20' (Free Discharge)
↑—**2=Culvert** (Controls 0.00 cfs)

Pond 1P: North Bed

Hydrograph

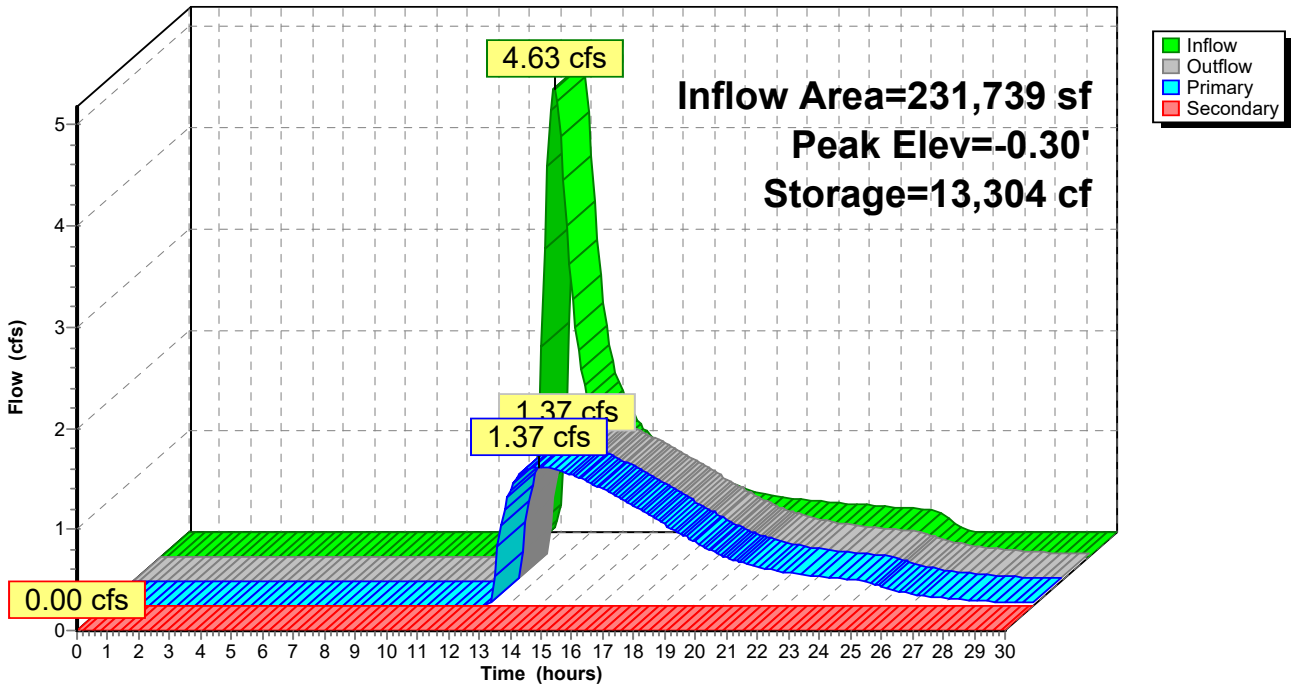

Pond 1P: North Bed

Stage-Discharge

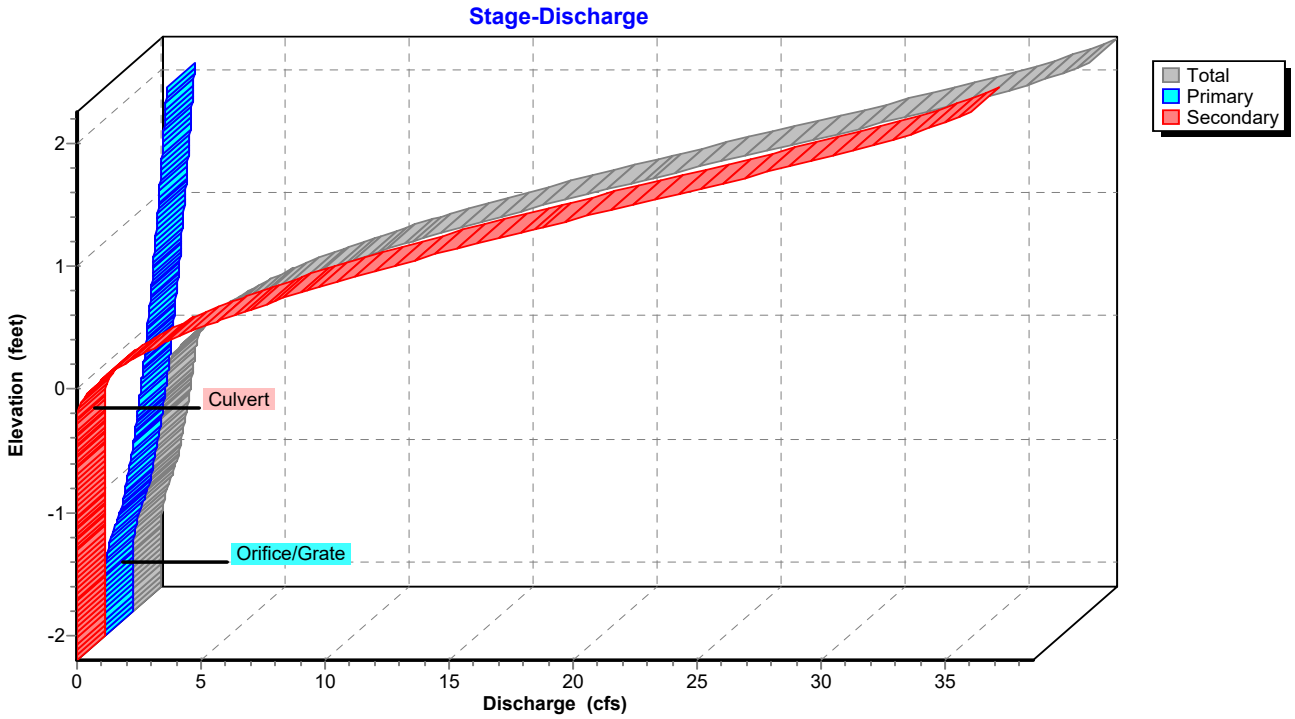

Pond 1P: North Bed

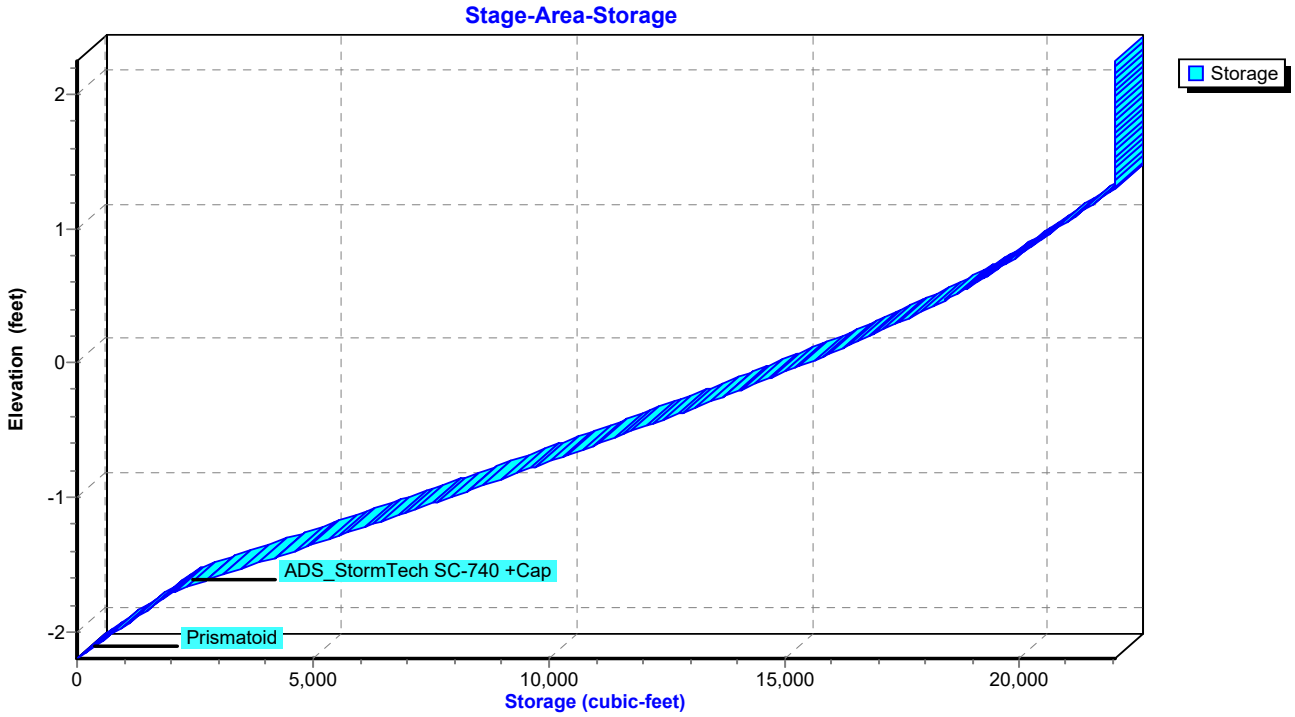

Hydrograph for Pond 1P: North Bed

Time (hours)	Inflow (cfs)	Storage (cubic-feet)	Elevation (feet)	Outflow (cfs)	Primary (cfs)	Secondary (cfs)
0.00	0.00	0	-2.20	0.00	0.00	**0.00**
1.00	0.00	0	-2.20	0.00	0.00	0.00
2.00	0.00	0	-2.20	0.00	0.00	0.00
3.00	0.00	0	-2.20	0.00	0.00	0.00
4.00	0.00	0	-2.20	0.00	0.00	0.00
5.00	0.00	0	-2.20	0.00	0.00	0.00
6.00	0.00	0	-2.20	0.00	0.00	0.00
7.00	0.00	0	-2.20	0.00	0.00	0.00
8.00	0.00	0	-2.20	0.00	0.00	0.00
9.00	0.00	0	-2.20	0.00	0.00	0.00
10.00	0.00	0	-2.20	0.00	0.00	0.00
11.00	0.00	0	-2.20	0.00	0.00	0.00
12.00	**0.28**	120	-2.17	0.00	0.00	0.00
13.00	**3.72**	9,953	-0.74	1.07	1.07	0.00
14.00	1.40	**13,302**	**-0.30**	**1.37**	**1.37**	0.00
15.00	0.94	12,506	-0.41	1.31	1.31	0.00
16.00	0.72	11,028	-0.61	1.17	1.17	0.00
17.00	0.54	9,347	-0.82	1.00	1.00	0.00
18.00	0.43	7,810	-1.01	0.82	0.82	0.00
19.00	0.36	6,561	-1.16	0.65	0.65	0.00
20.00	0.32	5,739	-1.26	0.49	0.49	0.00
21.00	0.29	5,266	-1.32	0.39	0.39	0.00
22.00	0.27	4,975	-1.36	0.33	0.33	0.00
23.00	0.24	4,770	-1.38	0.29	0.29	0.00
24.00	0.22	4,603	-1.40	0.26	0.26	0.00
25.00	0.04	4,246	-1.44	0.20	0.20	0.00
26.00	0.00	3,722	-1.50	0.12	0.12	0.00
27.00	0.00	3,373	-1.55	0.08	0.08	0.00
28.00	0.00	3,139	-1.57	0.05	0.05	0.00
29.00	0.00	2,975	-1.59	0.04	0.04	0.00
30.00	0.00	2,851	-1.61	0.03	0.03	0.00

Stage-Discharge for Pond 1P: North Bed

Elevation (feet)	Discharge (cfs)	Primary (cfs)	Secondary (cfs)
-2.20	0.00	0.00	0.00
-2.15	0.00	0.00	0.00
-2.10	0.00	0.00	0.00
-2.05	0.00	0.00	0.00
-2.00	0.00	0.00	0.00
-1.95	0.00	0.00	0.00
-1.90	0.00	0.00	0.00
-1.85	0.00	0.00	0.00
-1.80	0.00	0.00	0.00
-1.75	0.00	0.00	0.00
-1.70	0.00	0.00	0.00
-1.65	0.01	0.01	0.00
-1.60	0.03	0.03	0.00
-1.55	0.07	0.07	0.00
-1.50	0.13	0.13	0.00
-1.45	0.19	0.19	0.00
-1.40	0.26	0.26	0.00
-1.35	0.34	0.34	0.00
-1.30	0.43	0.43	0.00
-1.25	0.51	0.51	0.00
-1.20	0.60	0.60	0.00
-1.15	0.67	0.67	0.00
-1.10	0.73	0.73	0.00
-1.05	0.78	0.78	0.00
-1.00	0.84	0.84	0.00
-0.95	0.89	0.89	0.00
-0.90	0.93	0.93	0.00
-0.85	0.98	0.98	0.00
-0.80	1.02	1.02	0.00
-0.75	1.06	1.06	0.00
-0.70	1.10	1.10	0.00
-0.65	1.14	1.14	0.00
-0.60	1.18	1.18	0.00
-0.55	1.21	1.21	0.00
-0.50	1.25	1.25	0.00
-0.45	1.28	1.28	0.00
-0.40	1.31	1.31	0.00
-0.35	1.35	1.35	0.00
-0.30	1.38	1.38	0.00
-0.25	1.41	1.41	0.00
-0.20	1.46	1.44	0.02
-0.15	1.55	1.47	0.08
-0.10	1.69	1.50	0.20
-0.05	1.89	1.52	0.36
0.00	2.14	1.55	0.58
0.05	2.43	1.58	0.85
0.10	2.75	1.61	1.15
0.15	3.12	1.63	1.49
0.20	3.53	1.66	1.87
0.25	3.98	1.68	2.29
0.30	4.47	1.71	2.76
0.35	4.99	1.73	3.26
0.40	5.56	1.76	3.80
0.45	6.15	1.78	4.37
0.50	6.79	1.81	4.98
0.55	7.45	1.83	5.62
0.60	8.15	1.85	6.30
0.65	8.88	1.88	7.01
0.70	9.65	1.90	7.75
0.75	10.43	1.92	8.51
0.80	11.25	1.94	9.31
0.85	12.10	1.97	10.13
0.90	12.96	1.99	10.98
0.95	13.86	2.01	11.85
1.00	14.77	2.03	12.74
1.05	15.71	2.05	13.65
1.10	16.66	2.07	14.59
1.15	17.63	2.09	15.54
1.20	18.62	2.11	16.50
1.25	19.62	2.13	17.49
1.30	20.63	2.15	18.48
1.35	21.66	2.17	19.48
1.40	22.69	2.19	20.50
1.45	23.73	2.21	21.52
1.50	24.77	2.23	22.54
1.55	25.82	2.25	23.57
1.60	26.86	2.27	24.59
1.65	27.90	2.29	25.62
1.70	28.94	2.31	26.63
1.75	29.97	2.33	27.64
1.80	30.98	2.34	28.64
1.85	31.98	2.36	29.62
1.90	32.95	2.38	30.57
1.95	33.90	2.40	31.51
2.00	34.82	2.42	32.41
2.05	35.70	2.43	33.27
2.10	36.53	2.45	34.08
2.15	37.30	2.47	34.83
2.20	37.99	2.49	35.50
2.25	**38.54**	**2.50**	**36.03**

Stage-Area-Storage for Pond 1P: North Bed

Elevation (feet)	Storage (cubic-feet)
-2.20	0
-2.15	206
-2.10	412
-2.05	619
-2.00	825
-1.95	1,031
-1.90	1,237
-1.85	1,444
-1.80	1,650
-1.75	1,856
-1.70	2,062
-1.65	2,487
-1.60	2,911
-1.55	3,335
-1.50	3,758
-1.45	4,179
-1.40	4,599
-1.35	5,018
-1.30	5,435
-1.25	5,851
-1.20	6,265
-1.15	6,677
-1.10	7,087
-1.05	7,496
-1.00	7,902
-0.95	8,306
-0.90	8,709
-0.85	9,109
-0.80	9,506
-0.75	9,902
-0.70	10,295
-0.65	10,686
-0.60	11,074
-0.55	11,458
-0.50	11,840
-0.45	12,219
-0.40	12,594
-0.35	12,966
-0.30	13,335
-0.25	13,701
-0.20	14,062
-0.15	14,420
-0.10	14,774
-0.05	15,124
0.00	15,468
0.05	15,807
0.10	16,140
0.15	16,468
0.20	16,791
0.25	17,108
0.30	17,418
0.35	17,721
0.40	18,015
0.45	18,300
0.50	18,573
0.55	18,831
0.60	19,075
0.65	19,306
0.70	19,528
0.75	19,745
0.80	19,954
0.85	20,161
0.90	20,367
0.95	20,573
1.00	20,779
1.05	20,985
1.10	21,192
1.15	21,398
1.20	21,604
1.25	21,810
1.30	**22,017**
1.35	22,017
1.40	22,017
1.45	22,017
1.50	22,017
1.55	22,017
1.60	22,017
1.65	22,017
1.70	22,017
1.75	22,017
1.80	22,017
1.85	22,017
1.90	22,017
1.95	22,017
2.00	22,017
2.05	22,017
2.10	22,017
2.15	22,017
2.20	22,017
2.25	22,017

Summary for Pond 2P: South Bed

Inflow Area = 80,150 sf, 29.35% Impervious, Inflow Depth = 2.97" for 10-Year event
Inflow = 2.71 cfs @ 12.67 hrs, Volume= 19,824 cf
Outflow = 1.75 cfs @ 13.11 hrs, Volume= 19,782 cf, Atten= 36%, Lag= 26.6 min
Primary = 1.75 cfs @ 13.11 hrs, Volume= 19,782 cf
Secondary = 0.00 cfs @ 0.00 hrs, Volume= 0 cf

Routing by Stor-Ind method, Time Span= 0.00-30.00 hrs, dt= 0.10 hrs
Peak Elev= -0.83' @ 13.11 hrs Surf.Area= 4,971 sf Storage= 3,636 cf

Plug-Flow detention time= 33.4 min calculated for 19,716 cf (99% of inflow)
Center-of-Mass det. time= 32.7 min (922.2 - 889.5)

Volume	Invert	Avail.Storage	Storage Description
#1	-2.00'	4,644 cf	**44.85'W x 110.84'L x 3.50'H Prismatoid** 17,399 cf Overall - 5,788 cf Embedded = 11,611 cf x 40.0% Voids
#2	-1.50'	5,788 cf	**ADS_StormTech SC-740 +Cap** x 126 Inside #1 Effective Size= 44.6"W x 30.0"H => 6.45 sf x 7.12'L = 45.9 cf Overall Size= 51.0"W x 30.0"H x 7.56'L with 0.44' Overlap 126 Chambers in 9 Rows
		10,433 cf	Total Available Storage

Device	Routing	Invert	Outlet Devices
#1	Primary	-2.00'	**8.5" Vert. Orifice/Grate** C= 0.610 Limited to weir flow at low heads
#2	Secondary	-0.75'	**15.0" Round Culvert** L= 400.0' RCP, rounded edge headwall, Ke= 0.100 Inlet / Outlet Invert= -0.75' / -2.73' S= 0.0049 '/' Cc= 0.900 n= 0.013 Concrete pipe, bends & connections, Flow Area= 1.23 sf

Primary OutFlow Max=1.74 cfs @ 13.11 hrs HW=-0.83' (Free Discharge)
↑—**1=Orifice/Grate** (Orifice Controls 1.74 cfs @ 4.43 fps)

Secondary OutFlow Max=0.00 cfs @ 0.00 hrs HW=-2.00' (Free Discharge)
↑—**2=Culvert** (Controls 0.00 cfs)

Pond 2P: South Bed

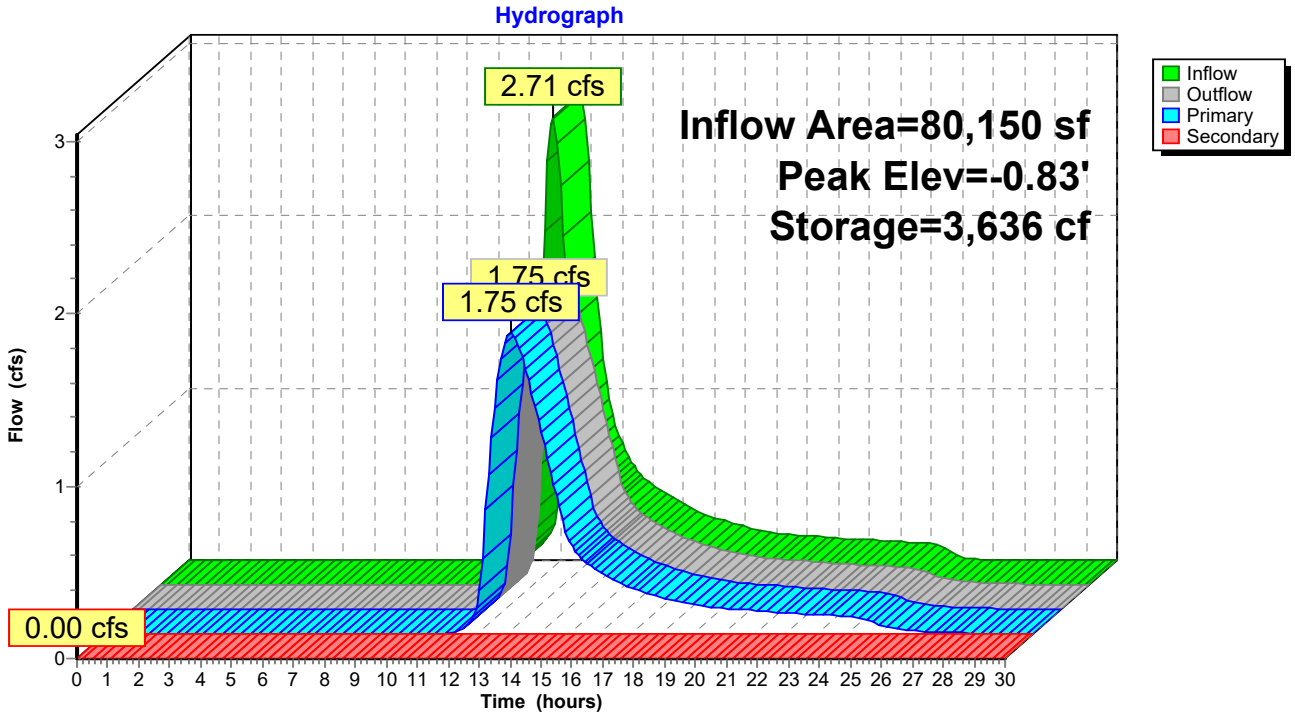

Pond 2P: South Bed

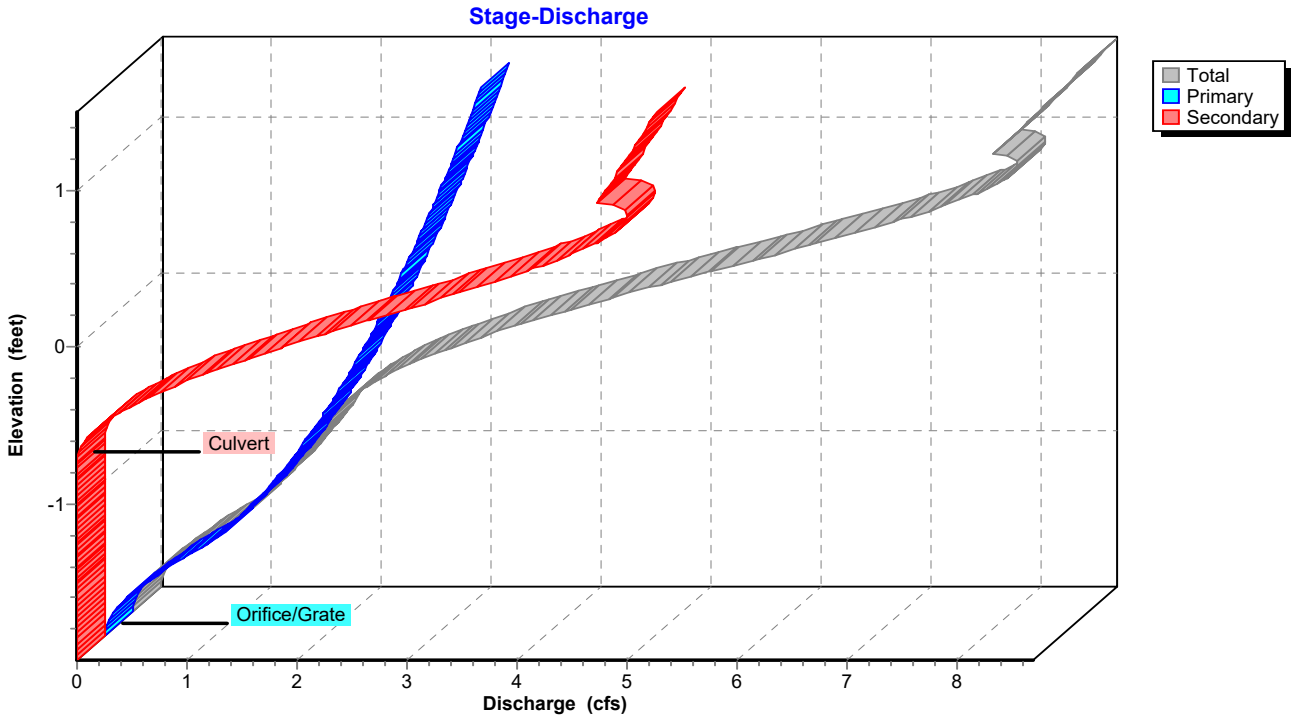

Pond 2P: South Bed

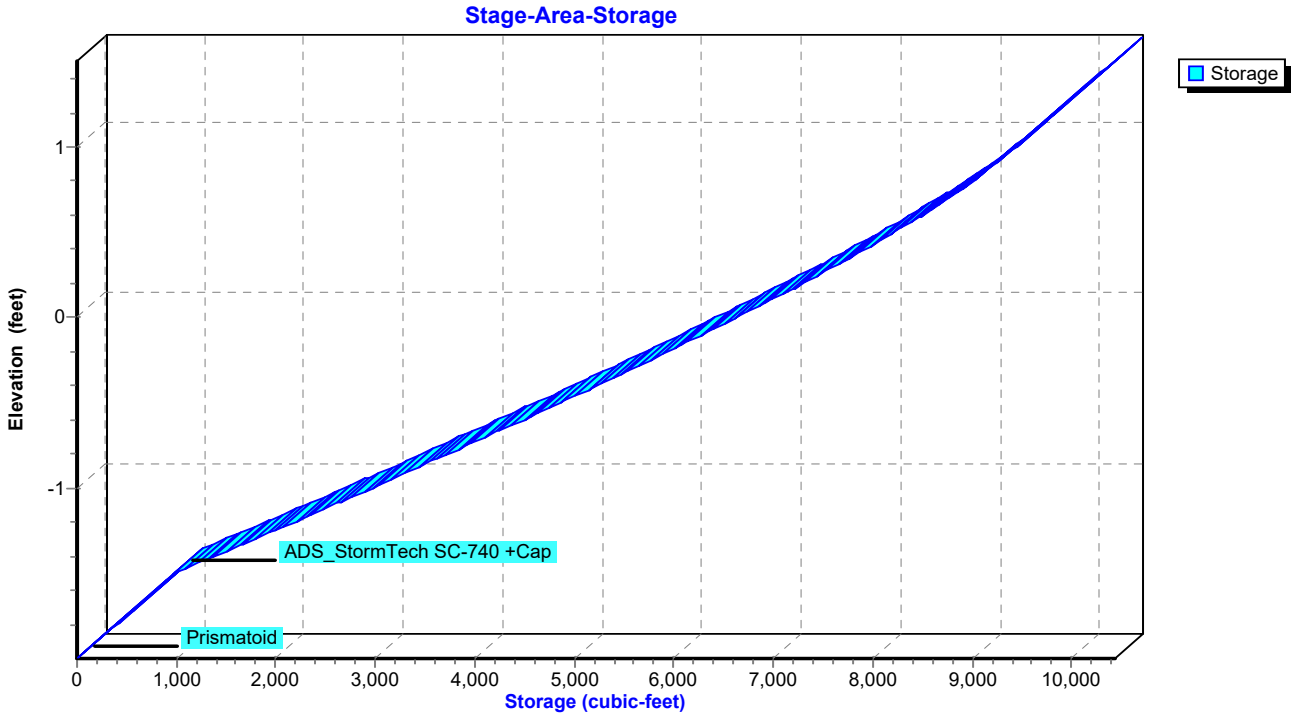

Hydrograph for Pond 2P: South Bed

Time (hours)	Inflow (cfs)	Storage (cubic-feet)	Elevation (feet)	Outflow (cfs)	Primary (cfs)	Secondary (cfs)
0.00	0.00	0	-2.00	0.00	0.00	**0.00**
1.00	0.00	0	-2.00	0.00	0.00	0.00
2.00	0.00	0	-2.00	0.00	0.00	0.00
3.00	0.00	0	-2.00	0.00	0.00	0.00
4.00	0.00	0	-2.00	0.00	0.00	0.00
5.00	0.00	0	-2.00	0.00	0.00	0.00
6.00	0.00	0	-2.00	0.00	0.00	0.00
7.00	0.00	0	-2.00	0.00	0.00	0.00
8.00	0.00	0	-2.00	0.00	0.00	0.00
9.00	0.00	0	-2.00	0.00	0.00	0.00
10.00	0.00	0	-2.00	0.00	0.00	0.00
11.00	0.04	36	-1.98	0.00	0.00	0.00
12.00	**0.43**	417	-1.79	0.15	0.15	0.00
13.00	**2.03**	**3,579**	**-0.84**	**1.73**	**1.73**	0.00
14.00	0.68	**2,063**	**-1.23**	**1.24**	**1.24**	0.00
15.00	0.44	830	-1.58	0.54	0.54	0.00
16.00	0.33	658	-1.67	0.36	0.36	0.00
17.00	0.24	558	-1.72	0.27	0.27	0.00
18.00	0.19	492	-1.75	0.21	0.21	0.00
19.00	0.16	437	-1.78	0.17	0.17	0.00
20.00	0.14	408	-1.79	0.15	0.15	0.00
21.00	0.13	386	-1.81	0.13	0.13	0.00
22.00	0.12	368	-1.81	0.12	0.12	0.00
23.00	0.11	351	-1.82	0.11	0.11	0.00
24.00	0.10	333	-1.83	0.10	0.10	0.00
25.00	0.02	246	-1.88	0.06	0.06	0.00
26.00	0.00	141	-1.93	0.02	0.02	0.00
27.00	0.00	93	-1.95	0.01	0.01	0.00
28.00	0.00	69	-1.97	0.00	0.00	0.00
29.00	0.00	54	-1.97	0.00	0.00	0.00
30.00	0.00	42	-1.98	0.00	0.00	0.00

Stage-Discharge for Pond 2P: South Bed

Elevation (feet)	Discharge (cfs)	Primary (cfs)	Secondary (cfs)
-2.00	0.00	0.00	0.00
-1.95	0.01	0.01	0.00
-1.90	0.04	0.04	0.00
-1.85	0.08	0.08	0.00
-1.80	0.14	0.14	0.00
-1.75	0.22	0.22	0.00
-1.70	0.30	0.30	0.00
-1.65	0.40	0.40	0.00
-1.60	0.50	0.50	0.00
-1.55	0.61	0.61	0.00
-1.50	0.73	0.73	0.00
-1.45	0.84	0.84	0.00
-1.40	0.95	0.95	0.00
-1.35	1.06	1.06	0.00
-1.30	1.14	1.14	0.00
-1.25	1.21	1.21	0.00
-1.20	1.29	1.29	0.00
-1.15	1.36	1.36	0.00
-1.10	1.43	1.43	0.00
-1.05	1.49	1.49	0.00
-1.00	1.55	1.55	0.00
-0.95	1.61	1.61	0.00
-0.90	1.67	1.67	0.00
-0.85	1.72	1.72	0.00
-0.80	1.77	1.77	0.00
-0.75	1.83	1.83	0.00
-0.70	1.88	1.88	0.01
-0.65	1.96	1.93	0.03
-0.60	2.05	1.97	0.08
-0.55	2.16	2.02	0.14
-0.50	2.29	2.06	0.22
-0.45	2.43	2.11	0.32
-0.40	2.59	2.15	0.44
-0.35	2.77	2.20	0.57
-0.30	2.96	2.24	0.72
-0.25	3.16	2.28	0.89
-0.20	3.38	2.32	1.06
-0.15	3.61	2.36	1.25
-0.10	3.85	2.40	1.45
-0.05	4.10	2.44	1.66
0.00	4.35	2.47	1.88
0.05	4.62	2.51	2.10
0.10	4.88	2.55	2.33
0.15	5.15	2.59	2.57
0.20	5.42	2.62	2.80
0.25	5.69	2.66	3.04
0.30	5.96	2.69	3.27
0.35	6.22	2.73	3.50
0.40	6.48	2.76	3.72
0.45	6.73	2.79	3.94
0.50	6.97	2.83	4.15
0.55	7.20	2.86	4.34
0.60	7.41	2.89	4.52
0.65	7.60	2.92	4.68
0.70	7.77	2.95	4.82
0.75	7.91	2.99	4.92
0.80	8.00	3.02	4.98
0.85	8.04	3.05	4.99
0.90	7.97	3.08	4.89
0.95	7.86	3.11	4.75
1.00	7.94	3.14	4.80
1.05	8.02	3.17	4.85
1.10	8.10	3.20	4.90
1.15	8.17	3.23	4.95
1.20	8.25	3.25	4.99
1.25	8.32	3.28	5.04
1.30	8.40	3.31	5.08
1.35	8.47	3.34	5.13
1.40	8.54	3.37	5.18
1.45	8.61	3.39	5.22
1.50	**8.69**	**3.42**	**5.26**

Stage-Area-Storage for Pond 2P: South Bed

Elevation (feet)	Storage (cubic-feet)
-2.00	0
-1.95	99
-1.90	199
-1.85	298
-1.80	398
-1.75	497
-1.70	597
-1.65	696
-1.60	795
-1.55	895
-1.50	994
-1.45	1,194
-1.40	1,393
-1.35	1,592
-1.30	1,791
-1.25	1,989
-1.20	2,186
-1.15	2,383
-1.10	2,579
-1.05	2,774
-1.00	2,969
-0.95	3,163
-0.90	3,356
-0.85	3,548
-0.80	3,739
-0.75	3,929
-0.70	4,118
-0.65	4,307
-0.60	4,494
-0.55	4,680
-0.50	4,865
-0.45	5,049
-0.40	5,231
-0.35	5,413
-0.30	5,592
-0.25	5,771
-0.20	5,948
-0.15	6,123
-0.10	6,297
-0.05	6,470
0.00	6,640
0.05	6,809
0.10	6,976
0.15	7,141
0.20	7,304
0.25	7,464
0.30	7,622
0.35	7,777
0.40	7,930
0.45	8,080
0.50	8,227
0.55	8,371
0.60	8,511
0.65	8,646
0.70	8,776
0.75	8,899
0.80	9,016
0.85	9,126
0.90	9,233
0.95	9,337
1.00	9,438
1.05	9,538
1.10	9,637
1.15	9,737
1.20	9,836
1.25	9,936
1.30	10,035
1.35	10,134
1.40	10,234
1.45	10,333
1.50	**10,433**

Events for Subcatchment 2S: Southern Area

Event	Rainfall (inches)	Runoff (cfs)	Volume (cubic-feet)	Depth (inches)
10-Year	7.80	2.71	19,824	2.97
100-Year	12.60	6.38	45,160	6.76
500-Year	**15.70**	**8.93**	**63,119**	**9.45**

Events for Subcatchment 20S: Northern Area

Event	Rainfall (inches)	Runoff (cfs)	Volume (cubic-feet)	Depth (inches)
10-Year	7.80	4.63	37,217	1.93
100-Year	12.60	13.65	98,847	5.12
500-Year	**15.70**	**20.39**	**145,155**	**7.52**

Events for Pond 1P: North Bed

Event	Inflow (cfs)	Outflow (cfs)	Primary (cfs)	Secondary (cfs)	Elevation (feet)	Storage (cubic-feet)
10-Year	4.63	1.37	1.37	0.00	-0.30	13,304
100-Year	13.65	12.97	1.99	10.99	0.90	20,370
500-Year	**20.39**	**20.16**	**2.14**	**18.02**	**1.28**	**21,921**

Events for Pond 2P: South Bed

Event	Inflow (cfs)	Outflow (cfs)	Primary (cfs)	Secondary (cfs)	Elevation (feet)	Storage (cubic-feet)
10-Year	2.71	1.75	1.75	0.00	-0.83	3,636
100-Year	6.38	5.47	2.63	2.84	0.21	7,331
500-Year	**8.93**	**7.94**	**2.99**	**4.94**	**0.76**	**8,925**

TABLE OF CONTENTS

Project Reports
1 Routing Diagram
2 Rainfall Events Listing (selected events)
3 Area Listing (all nodes)
4 Soil Listing (all nodes)
5 Ground Covers (all nodes)
6 Pipe Listing (all nodes)

10-Year Event
7 Node Listing
8 Subcat 2S: Southern Area
10 Subcat 20S: Northern Area
12 Pond 1P: North Bed
18 Pond 2P: South Bed

100-Year Event
24 Node Listing
25 Subcat 2S: Southern Area
27 Subcat 20S: Northern Area
29 Pond 1P: North Bed
35 Pond 2P: South Bed

500-Year Event
41 Node Listing
42 Subcat 2S: Southern Area
44 Subcat 20S: Northern Area
46 Pond 1P: North Bed
52 Pond 2P: South Bed

Multi-Event Tables
58 Subcat 2S: Southern Area
59 Subcat 20S: Northern Area
60 Pond 1P: North Bed
61 Pond 2P: South Bed

3.2 POLLUTANT LOAD CALCULATIONS

Total Project Site Area:	7.9	acres	
C-7 Area:	44%		
C-8 Area:	56%		
Total volume required to be detained:	35,846	cubic feet	*(first 1 ¼ " of rainfall)*
Total volume detained and filtered:	240,313	cubic feet	*(entire 10-yr, 24-hr storm)*

	Existing*		**Proposed**	
Total volume detained	0	cubic feet	240,313	cubic feet
Impervious surface area	309276	square feet	20473	square feet
Composite "Q" Value - 10 Year (cfs)	9.5	cu. ft. / sec	0	cu. ft. / sec

TOTAL POLLUTANT LOADS (10-YR 24-HOUR STORM)

	PRE-development*		**POST-development**	
% rainfall treated	0	percent	100	percent
Total Suspended Solids (TSS)	162	lbs	0	lbs
Total Phosphorous (TP)	6.8	lbs	0	lbs
Total Nitrogen (TN)	24.8	lbs	0	lbs
Total Copper (TCu)	0.00	lbs	0	lbs
Total Zinc (TZn)	0.00	lbs	0	lbs

assume unclogged conditions.

mg/L to lb/cu.ft. conversion factor: 0.000062428

Pace Analytical Services, LLC
1000 Riverbend Blvd - Suite F
St. Rose, LA 70087
(504)469-0333

ANALYTICAL RESULTS

Project: NPDES Testing
Pace Project No.: 2071865

Sample: C-8 **Lab ID: 2071865001** Collected: 03/06/18 12:30 Received: 03/06/18 13:20 Matrix: Water

Parameters	Results	Units	Report Limit	DF	Prepared	Analyzed	CAS No.	Qual
200.7 Metals, Total	Analytical Method: EPA 200.7 Preparation Method: EPA 200.7							
Copper	ND	mg/L	0.010	1	03/07/18 08:01	03/07/18 14:54	7440-50-8	
Zinc	ND	mg/L	0.020	1	03/07/18 08:01	03/07/18 14:54	7440-66-6	
2540D Total Suspended Solids	Analytical Method: SM 2540D							
Total Suspended Solids	**9.0**	mg/L	4.0	1		03/07/18 09:19		
Total Nitrogen Calculation	Analytical Method: 40CFR PART 432.2							
Nitrogen	**1.7**	mg/L	1.0	1		03/13/18 11:00	7727-37-9	
351.2 Total Kjeldahl Nitrogen	Analytical Method: EPA 351.2 Preparation Method: EPA 351.2							
Nitrogen, Kjeldahl, Total	**0.96**	mg/L	0.10	1	03/07/18 13:13	03/08/18 09:33	7727-37-9	
365.4 Total Phosphorus	Analytical Method: EPA 365.4 Preparation Method: EPA 365.4							
Phosphorus	**0.42**	mg/L	0.050	1	03/07/18 13:15	03/09/18 11:14	7723-14-0	M1
4500NO3-F, NO3-NO2	Analytical Method: SM 4500-NO3 F							
Nitrogen, NO2 plus NO3	**0.70**	mg/L	0.050	1		03/07/18 11:41		

Sample: C-7 **Lab ID: 2071865002** Collected: 03/06/18 12:40 Received: 03/06/18 13:20 Matrix: Water

Parameters	Results	Units	Report Limit	DF	Prepared	Analyzed	CAS No.	Qual
200.7 Metals, Total	Analytical Method: EPA 200.7 Preparation Method: EPA 200.7							
Copper	ND	mg/L	0.010	1	03/07/18 08:01	03/07/18 14:58	7440-50-8	
Zinc	ND	mg/L	0.020	1	03/07/18 08:01	03/07/18 14:58	7440-66-6	
2540D Total Suspended Solids	Analytical Method: SM 2540D							
Total Suspended Solids	**13.0**	mg/L	4.0	1		03/07/18 09:19		
Total Nitrogen Calculation	Analytical Method: 40CFR PART 432.2							
Nitrogen	**1.6**	mg/L	1.0	1		03/13/18 11:00	7727-37-9	
351.2 Total Kjeldahl Nitrogen	Analytical Method: EPA 351.2 Preparation Method: EPA 351.2							
Nitrogen, Kjeldahl, Total	**1.2**	mg/L	0.10	1	03/07/18 13:13	03/08/18 09:38	7727-37-9	
365.4 Total Phosphorus	Analytical Method: EPA 365.4 Preparation Method: EPA 365.4							
Phosphorus	**0.49**	mg/L	0.050	1	03/07/18 13:15	03/09/18 11:15	7723-14-0	
4500NO3-F, NO3-NO2	Analytical Method: SM 4500-NO3 F							
Nitrogen, NO2 plus NO3	**0.42**	mg/L	0.050	1		03/07/18 11:43		

REPORT OF LABORATORY ANALYSIS

This report shall not be reproduced, except in full,
without the written consent of Pace Analytical Services, LLC.

4.1 O&M PLAN

Problem	*Solution*	*Maintenance Frequency*
Sedimentation of Infiltration Material: Deposition of sediment from sources outside of the basins may clog the upper layers of infiltration material.	If unexpected surface ponding occurs, the top layer of aggregate should be removed and washed or replaced; and the filter fabric should be replaced, with care being taken not to contaminate lower layers with fine sediments.	Inspection: Immediately After Large Rain Events
Sedimentation of Storage Tanks: Soil, grit, and other materials may be flushed into the drainage system, effectively reducing storage volumes and clogging outlet orifices.	Because the site will be surfaced with coarse aggregates, and low activity is expected on the site, the sediment load is expected to be very low and cleaning needs may be very infrequent. However, a bi-annual visual inspection via opening of manhole covers will be conducted to assess cleaning needs.	Inspection: 2 years Cleaning: As-Needed
Settlement of Drainage Pipes: Cracking of drainage pipes and loss of positive drainage slopes may occur as a result of differential settlement of the subgrade soils due to the addition of fill material. Most settlement will occur within the first few years.	Concurrently with the above inspections, an assessment will be made of the effectiveness of the drainage flow paths. CCTV may also be used to assess the pipes. If adverse pipe slopes or cracking due to settlement are evident, the pipes must be re-laid or replaced.	Inspection: 2 years Repair: As-Needed
Intrusion of Corrosive Substances: Some substances in the runoff water could corrode the metal storage tanks and render them structurally unsound.	This is more problematic in northern climates where salting agents are used. But, if a spill of a corrosive substance occurs, the system will be flushed with water.	Flushing: As-Needed

O&M Contact Person:

General Superintendent
625 Saint Joseph Street, Room 311
New Orleans, LA 70165
Phone: 504-585-2365

4.2 O&M AGREEMENT

It is assumed that this agreement is not applicable to the Sewerage & Water Board as a public entity. All operations & maintenance will be performed under the supervision of the Sewerage & Water Board.

5.1 PRELIMINARY SWPPP

PRELIMINARY

Stormwater Pollution Prevention Plan

(SWPPP)

Prepared by:

VOLKERT

4141 Bienville St., Suite 102
New Orleans, LA, 70119

Revised: September 2022

1 INTRODUCTION

This preliminary SWPPP has been developed to indicate the general scope of stormwater pollution prevention for Stormwater Management Plan review purposes. A **final SWPPP will be developed by the contractor** and their subcontractors after award of the construction contract. The SWPPP will be developed in accordance with the Louisiana Department of Environmental Quality (LDEQ) General Permit for Discharges of Storm Water from Construction Activities Five (5) Acres or More (Master General Permit No. LAR 100000); and will be submitted with a Notice of Intent (NOI) prior to beginning work.

2 EXISTING CONDITIONS

2.1 Site Location:

The site is at the north corner of the Carrollton Water Plant (CWP), 8800 S. Claiborne Avenue, New Orleans, Louisiana. The site consists of two previously adjacent reinforced concrete clarification basins, namely C-7 and C-8, which were built in the early 1900s but have subsequently been decommissioned and filled in with sand and lightweight fill.

2.2 Site Size:

The C-7 basin covers an area of 3.0 acres. The C-8 basin covers an area of 3.9 areas. The total drainage area to these basins is 7.9 acres due to the additional tributary area from the adjacent Monticello levee.

2.3 Adjacent Property:

The Monticello levee parallels the site along the northwest perimeter of the basins. The Monticello levee separates Orleans and Jefferson Parishes. On the opposite side of the levee is Monticello Avenue and a residential area of Jefferson Parish.

On the northeast perimeter of the site are the existing water storage tanks which are part of the Carrollton Water Plant and are visible from Claiborne Avenue.

The southwest and southeast perimeters of the site abut with existing active water treatment basins at the Carrollton Water Plant.

2.4 Existing Topography, Land Cover Type, & Structures:

C-7 and C-8 is covered in crushed stone across the entire site and graded at a 0.5% grade.

The tributary area from the levee is primarily grassed, with some gravel roadway.

2.5 USDA NRCS Soil Type:

Per the NRCS Soil Survey, the soil underlying the concrete bottom slabs of these basins are primarily Schriever clay with a very small amount of Cancienne silty clay loam. Geotechnical investigations confirm that the upper layers are primarily clay and indicate that there is a layer of sand below the clay.

2.6 Existing Drainage Infrastructure:

1. Two underground stormwater storage tanks will be fabricated from perforated 36" corrugated metal pipe (CMP). While the majority of rainfall will be infiltrated in 10-year or lesser storms, any excess rainfall will be collected through grate inlets at the surface and stored in the CMP storage tanks. The tanks will be placed in series. A connection will be made to the existing gravity drain to Claiborne Avenue through one of the existing overflow stand pipes. Outflow control structures will limit the total outflow from the site to Claiborne Avenue to 3.0 cfs in a 10-year storm event. The perforations in the tanks will allow for additional infiltration while the runoff is in storage.

   The groundwater table elevation is expected to normalize around elevation -1.0 or -2.0 post-construction, which is approximately three to four feet above the existing concrete bottom elevation and into the sand fill, below the invert of the proposed permanent stormwater storage tanks.
2. Any storm event that is 10 years and under will flow through a connection between the storm chamber collection system and an existing 20" cast iron gravity drain pipe which outfalls to one of the two box culverts in the Claiborne Avenue neutral ground, which are 20'x9' and 18'x9'. This outlet can be engaged and disengaged through a valve in the drain pipe located in the CWP near Claiborne Avenue.
3. There are two overflow standpipes located near the perimeter of the basins. These standpipes are elevated significantly above the existing water surfaces (near elevation +10.0). These overflows were designed for the water treatment process and are not likely to engage even under high-intensity storms. The standpipes tie into the existing 20" ductile iron gravity drain pipe, upstream of the mud collection system tie-in.

4. A French drain is also running along the southwest remaining wall of the C-7 and C-8 basins that is intended to capture much of the leaking from the water basins and discharges into the 20" ductile iron pipe.

3 HISTORICAL DETERMINATION

After reviewing the National Register of Historic Places website, it was determined that none of the listed sites are located in the vicinity of the project site, nor will any listed site be affected by the project.

4 EXISTING NATURAL RESOURCES

4.1 Waterbodies

As previously discussed runoff from the site drains into the existing subsurface drainage along Claiborne Avenue. This subsurface drainage system discharges to the 17th Street Canal and subsequently to Lake Pontchartrain. However, it can also be directed to outflow into the Mississippi River with the use of the facility's mud pumps.

4.2 Wetlands

The project site does not contain any state-regulated fresh water wetlands.

4.3 Threatened or Endangered Species

Upon further investigation of the listed endangered and threatened species listed for Orleans Parish it was determined that there are no species or critical habitat located within the proximity of the facility.

5 SITE HYDROLOGY

5.1 The permanent BMPs utilized in this project are expected to ensure that storm water discharges are in compliance with the TMDL for this site.

Summary of permanent BMPs planned for this development:

- 2- 36" CMP perforated detention systems
    - 44'x133' with a storage capacity of 10,068 Cu. Ft.
    - 54'x226' with a storage capacity of 21,627 Cu. Ft.

5.2 Pipes will be installed to capture the flow that above a 10 year storm that the storm chambers cannot contain. This piping system contains a 15" pipe from storm chamber 1 and a 30" from storm chamber 2 and then a 30" out to the existing box that runs along S. Claiborne Ave.

6 ANTICIPATED PERMITS

The following is a list of the anticipated authorizations for the construction activities associated with the proposed project:

- LDEQ General Permit for Discharges of Storm Water from Construction Activities Five (5) Acres or More
- Orleans Levee District Levee Safety Permit

7 TEMPORARY EROSION AND SEDIMENT CONTROLS

The following are specific erosion control measures that should be utilized for this project.

7.1 Silt Fence

The use of silt fence should be applied along the project limits that are downstream from the project site run off.

7.2 Inlet Protection

Drainage inlets should be well protected with silt fencing, hay bales, or dirt bags to prevent sediment and silt from entering the drainage system.

7.3 Soil Stockpile

All soils that are stockpiled on-site should be protected and stabilized by seed, mulch, or appropriate measures, when activities have ceased for more than 7 days.

7.4 Dust Control

If necessary during the demolition process debris and any disturbed earth should be wetted to control dust.

7.5 Dewatering

All discharges should be strictly uncontaminated under this permit. Any contaminated discharges will require additional permitting by the appropriate authorities. Turbidity barriers, filters, or other methods may be used to ensure the clarity of pumped discharges.

8 INSPECTION AND MAINTENANCE

Inspections throughout the construction phases should be conducted by a qualified inspector (hired by the owner). Records of inspections should be update and kept on-site. Site inspections should be conducted at least every 7 days or at least every 14 calendar days (TBD), before anticipated storm events, and within 24 hours of the end a storm event of 0.5 inches or greater.

For each inspection required above the inspector's report must cover at a minimum the following information.

- The inspection date
- Names, titles, and qualifications of personnel making the inspection
- Weather information for the period since the last inspection including a best estimate of the beginning of each storm event (in inches), and whether any discharges occurred
- Weather information and a description of any discharges occurring at the time of the inspection
- Location(s) of discharges of sediment or other pollutants from the site
- Locations(s) of BMPs that failed to operate as designed or proved inadequate for a particular location
- Location(s) of BMPs that need to be maintained
- Location(s) where additional BPMs are needed that did not exist at the time of the inspection
- Corrective action required including implementation dates

Upon finishing inspections and filing of report the inspector will notify the Owner or Operator/Applicant and appropriate Contractor (and subcontractor) of any corrective actions needed within one business day. The Contractor (or Subcontractor) shall begin implementing the corrective actions within one business day of this notification and shall complete the corrective actions in a reasonable time frame.

Appendix A: SWMP Requirements (CZO Article 23) Guidance

ARTICLE 23. LANDSCAPE, STORMWATER MANAGEMENT, & SCREENING

23.1 PURPOSE
23.2 ENFORCEMENT OF LANDSCAPE PROVISIONS
23.3 LANDSCAPE AND STORMWATER MANAGEMENT PLANS
23.4 SELECTION, INSTALLATION, AND MAINTENANCE OF PLANT MATERIALS
23.5 GENERAL LANDSCAPE DESIGN STANDARDS
23.6 BUILDING FOUNDATION LANDSCAPE AND LANDSCAPE YARDS
23.7 PARKING LOT LANDSCAPE
23.8 BUFFER YARDS
23.9 REQUIRED LANDSCAPE ILLUSTRATION
23.10 TREE PRESERVATION
23.11 PARKWAY TREES
23.12 STORMWATER MANAGEMENT REQUIREMENTS
23.13 SCREENING REQUIREMENTS

23.1 PURPOSE

The landscape, stormwater management, and screening requirements established by this Article are intended to:

A. Assist in the development of a sustainable New Orleans by encouraging sustainable practices for landscape design, construction and landscape maintenance.

B. Reduce urban runoff and mitigate the effect of new development, redevelopment, or infill development on the existing drainage system by ensuring the preservation of permeable surfaces and requiring the installation of stormwater Best Management Practice (BMPs) to slow surface flow of stormwater runoff and promote filtration, plant uptake, absorption, and infiltration into sub-soils to reduce subsidence rates.

C. Increase compatibility between abutting land uses and between land uses and public rights-of-way by providing landscape screening or buffers.

D. Provide for the conservation of water resources through the efficient use of irrigation, appropriate mix of plant materials, recycling water elements, and regular maintenance of landscaped areas.

E. Protect public health, safety, and welfare by preserving and enhancing the positive visual experience of the built environment, promoting urban forestry, providing appropriate transition between different land uses, preserving neighborhood character, and enhancing pedestrian and vehicular traffic safety.

F. Reduce the urban heat island effect, enhance the local micro-climate, increase species biodiversity, reduce consumption of energy by proper placement of shade trees and incorporate tree canopy concepts as set forth in the City's Master Plan.

23.2 ENFORCEMENT OF LANDSCAPE PROVISIONS

A. No building permit or certificate of occupancy may be issued for any lot or use subject to the requirements of this Article unless all the requirements of this Article have been met. Failure to implement the landscape and/or stormwater management plan, or to maintain the lot or use in conformance with the landscape and/or stormwater management plan, is cause for revocation of the certificate of occupancy and/or the application of fines and penalties, as established in this Ordinance. In addition, all landscape is subject to periodic inspection.

B. Prior to the issuance of a certificate of occupancy, as applicable, a landscape architect or professional engineer licensed in Louisiana shall certify with signature and seal in an affidavit that the landscape and stormwater management measures have been installed in accordance with all approved plans and specifications, subject to existing conditions and unless otherwise specified.

C. When the landscape and stormwater management plans are approved, the City requires performance bond in the amount of twenty-five (25%) percent of the initial combined costs, which shall be posted prior to the issuance of the building permit to ensure that the needed replacement and continued maintenance of materials occurs during the two (2) years following construction and installation.

23.3 LANDSCAPE AND STORMWATER MANAGEMENT PLANS

A. Applicability

1. A landscape plan is required for all developments, with the exception of single-family dwellings, two-family dwellings, and multi-family dwellings of six (6) units or less.

2. In order to comply with federal, state, and local regulations for urban stormwater management, a stormwater management plan shall be submitted as part of any new development, including redevelopment, of a site of five thousand (5,000) square feet or more of impervious surface, or any new development, including redevelopment, of a site of one (1) acre or more in size.

3. Single-family and two-family residential developments do not require submittal of a stormwater management plan, but shall comply with all other applicable federal, state, and local stormwater ordinances.

B. Content of Landscape Plan

Landscape plans shall be prepared by a registered landscape architect licensed by the Louisiana Horticulture Commission. A horticulturist/landscape contractor licensed in Louisiana may be used for projects that do not require a stormwater management plan. A landscape plan shall contain the following information:

1. The location and dimensions of all existing and proposed structures, property lines, servitudes, parking lots and drives, roadways and rights-of-way, sidewalks, signs, refuse disposal and recycling areas, sidewalks, bicycle paths and parking facilities, fences, electrical equipment, recreational facilities, drainage facilities, and other freestanding structures, as determined necessary by the Executive Director of the City Planning Commission.

2. The location, quantity, size, name, and condition, both botanical and common, of all existing plant materials and trees, and a description of all tree preservation measures.

3. The location, quantity, size, name, and condition of all plant material and trees in the right-of-way, and indicating plant material and trees to be retained and removed.

4. The location, quantity, size, and name, both botanical and common, of all proposed plant material including, but not limited to, shade and evergreen trees, shrubs, groundcover, annuals, perennials, and turf.

5. The existing and proposed grading of the site indicating contours at one (1) foot intervals.

6. Building elevations of all proposed fences, walls, steps, and fixed retaining walls (cast concrete, unitized walls) on the site.

7. Landscape plans and specifications shall be designed following sustainability principles as set forth in the sustainable landscaping Louisiana Yards and Neighborhoods (LYN) Program published by the LSU AgCenter, latest edition.

8. Other details as deemed necessary by the Executive Director of the City Planning Commission.

C. Content of Stormwater Management Plan

Stormwater Management Plans shall be prepared by a registered landscape architect licensed by the Louisiana Horticulture Commission or a registered professional engineer licensed by the Louisiana Professional Engineering and Land Surveying Board (LAPELS). For all sites one (1) acre or more, a registered professional engineer must approve (stamp) all pertinent drainage and retention calculations. The CPC Executive Director reserves the right to require a registered landscape architect to approve (stamp) and/or delineate all pertinent green infrastructure planting BMP improvements. All Stormwater Management Plans shall include the pre-development and post-development runoff rates and shall contain the following:

1. The location of the petitioned property and adjacent developments, to include all above ground, surface and sub-surface infrastructure.

2. Existing site conditions, including a description and topographic map of land cover, contours, description and map of soil types and estimated pollutant load.

3. Description and development plan of the proposed development, including land cover, contours, and empirically expected pollutant load.

4. All storm drainage systems, including existing and proposed drain lines, culverts, catch basins, headwalls, hydrants, manholes, and temporary and permanent stormwater Best Management Practices (BMPs). Site BMPs shall consist primarily of green stormwater infrastructure features for the purpose of extending the time of concentration to the drainage system, filtering runoff through plants and soil and reducing total runoff.

5. All pertinent calculations and specifications used in the design and construction of the permanent stormwater BMPs to retain, detain, and filter the first one and one quarter (1.25) inch of stormwater runoff during each rain event. Safeguards to prevent short-circuiting of permanent stormwater BMPs shall be designed into the system. Capacities of BMPs shall show surface and sub-surface volumes (in aggregate, chambers, cisterns, etc.) in gallons.

6. Plan implementation and anticipated timeline.

7. A plan showing site sub-catchment areas, retention BMP areas and capacities, detention BMP areas and capacities, conveyance BMPs, and stormwater runoff treatment train of BMPs in which runoff is directed before leaving the site(surface or sub-surface). The applicant shall also describe the receiving stream, canal, pipe, culvert, ditch or other drainage structure into which the runoff from the property flows.
8. Description of how the proposed drainage and temporary and permanent stormwater BMPs will be maintained.

9. The estimated and itemized cost of proposed drainage and temporary and permanent stormwater BMPs.

10. All SWP's shall meet or exceed the requirements of the Landscape Plan.

11. For all currently developed sites, the post-development runoff rate shall be less than the pre-development runoff rate.

12. For all construction sites consisting a one (1) acre or more, a Stormwater Pollution Prevention Plan (SWPPP) shall also be prepared, submitted and followed at the time of permitting, in accordance with all state and federal water quality regulations.

13. A ten (10) year Operations and Maintenance (O&M) Plan or Program for all site BMPs.

D. Minor Changes to Approved Landscape Plans

Minor changes to the landscape plan that do not result in a reduction in the net amount of plant material as specified on the approved landscape plan or a reduction in the net amount of water detained or stored and filtered on-site may be approved by the Director of the Department of Safety and Permits or the Executive Director of the City Planning Commission. Changes to the size and amount of plant materials of an approved landscape plan are not considered a minor change. Major changes shall be approved by the body initially granting approval of the landscape plan.

E. Alternative Compliance

1. The landscape and stormwater management standards contained in this Article are intended to encourage development that is environmentally functional, economically viable, and aesthetically pleasing. The following standards are not intended to inhibit creative development. Project conditions associated with individual sites may justify approval of alternative methods of compliance when landscape is part of an integrated water management strategy. It is acknowledged that conditions may arise where normal compliance is impractical or impossible, a design proposal offers superior results, or maximum achievement of the City's objectives can only be obtained through alternative compliance.

2. Requests for alternative compliance will be accepted for any permit application to which the requirements of this Article apply, when one (1) or more of the following conditions are met:

a. Topography, soil, vegetation, drainage, or other site conditions are such that full compliance is impractical.

b. Improved environmental quality would result from the alternative compliance of the provisions of this Article.

c. Spatial limitations, unusually shaped pieces of land, unusual servitude requirements, or prevailing practices in the surrounding area may justify alternative compliance for infill sites.

3. A request for alternative compliance shall be submitted at the time the landscape and/or stormwater management plan is submitted. In no case shall the landscape requirements be reduced by more than twenty-five percent (25%). Request for alternative compliance shall be accompanied by a written explanation of such alternatives to allow appropriate valuation and decision by the by the Executive Director of the City Planning Commission.

23.4 SELECTION, INSTALLATION, AND MAINTENANCE OF PLANT MATERIALS

A. Selection

All planting materials used shall be of good quality and meet American Association of Nurserymen (ANNS) standards for minimum acceptable form, quality, and size for species selected, and capable to withstand the seasonal temperature variations, as well as the individual site micro-climates. The use of wet-tolerant native species in stormwater BMPs or drought-tolerant native species is encouraged. Size and density of plant material, both at the time of planting and at maturity, shall be considered when selecting plant material.

B. Installation

All landscape materials shall be installed in accordance with the current planting procedures established by the "Louisiana Nurseryman's Manual for the Environmental Horticultural Industry," latest edition, as published by the Louisiana Nursery and Landscape Association. All trees on City property, including street trees, shall be in compliance with the Department of Parks and Parkways Section 02481, "Installation of Plant Materials". All plant materials shall be free of disease and installed so that soil is of sufficient volume, composition, and nutrient balance to sustain healthy growth.

C. Wet- and Drought-Tolerant Plant Requirements

Plant selection should emphasize wet-tolerant native species in stormwater BMPs whenever possible. When this is not feasible, drought-tolerant native species with irrigation systems may be installed. Wet-tolerant and drought-tolerant species shall be grouped by common irrigation need.

1. Plant Materials

a. Plant selection shall first emphasize a variety of wet-tolerant native species incorporated in stormwater management BMPs. A minimum of fifty percent (50%) of all required landscaped areas shall be designed, constructed and maintained as green stormwater infrastructure features.

b. For all projects that include landscape areas not included within stormwater BMPs, at least fifty percent (50%) of the landscaped area shall be drought-tolerant plants.

c. For all projects that include total landscape areas not within stormwater BMPs, the landscape plan shall contain irrigation water calculations and shall not exceed the maximum applied water allowance of twenty-five (25) gallons per square foot of landscape area. The applicant shall indicate the square footage and the water use calculation for each irrigated landscape area.

2. Groupings

Landscape areas having plants with similar water needs shall be grouped together and irrigated by a dedicated irrigation controller station. All plants listed in the landscape plan shall be classified and grouped by category of water use calculations. Water use calculations shall be grouped as low, medium, and high.

D. Protection of Existing Vegetation

All construction projects are subject to the requirements of Chapter 106, Article IV of the City Code. Additionally, construction projects which impact public trees are subject to the Department of Parks and Parkways Section 02480 “Landscape Protection During Construction.”

E. Required Element

Landscape materials depicted on landscape plans approved by the City are required development plan elements in the same manner as structures, parking, and other improvements. As such, the owner of record is responsible for the maintenance, repair, and replacement of all landscape materials, fences, steps, retaining walls, and similar landscape elements over the entire life of the development.

F. Maintenance

All landscape materials shall be maintained in good condition, present a healthy, neat and orderly appearance, and kept free of weeds, refuse, and debris. Any dead, unhealthy, or missing plants shall be replaced within six (6) months of notification by the City. Fences, steps, retaining walls, and similar landscape elements shall be maintained in good repair. The owner of the premises is responsible for the maintenance, repair, and replacement of all landscape materials, fences, steps, retaining walls, and similar landscape elements, and all refuse disposal areas. Irrigation systems, when provided, shall be maintained in good operating condition to promote the health of the plant material and the conservation of water.

23.5 GENERAL LANDSCAPE DESIGN STANDARDS

Landscape plans, as described above, shall be prepared by a registered landscape architect licensed by the Louisiana Horticulture Commission. However, a horticulturalist/landscape contractor licensed in Louisiana may be used for projects that do not require a stormwater management plan and where the horticulturalist/landscape contractor is performing the installation. A landscape plan shall be evaluated and approved based on the following design criteria.

A. Scale and Nature of Landscape Material

The scale and nature of landscape materials shall be appropriate to the size of the site and related structures.

B. Selection of Plant Material

Plant material shall be selected for its form, texture, color, pattern of growth, and suitability to local conditions. All landscape plans shall incorporate at least fifty percent (50%) of native trees and shrubs into required plant materials to provide habitat for wildlife, reduce irrigation requirements and promote the sustainability and survivability of plant material.

C. Trees

1. When adjacent to sidewalks, trees shall have a minimum height of twelve (12) feet at planting with a minimum canopy clearance of six and a half (6.5) feet in order to allow pedestrian passage.

2. All deciduous shade trees at the time of installation shall have a minimum caliper of two and one-half (2.5) inches for single trunk trees and one and one-quarter (1.25) inches for multi-trunk trees, and a clear trunk height of at least six (6) feet, unless otherwise

specified. Caliper is measured at six (6) inches above the ground for trees up to four (4) inches in caliper. If the caliper exceeds four (4) inches at six (6) inches above the ground, caliper is measured at twelve (12) inches above the ground as per ANSI Z60.

3. Evergreen trees shall have a minimum height of eight (8) feet at planting.

4. Single stem ornamental trees shall have a minimum caliper of three (3) inches taken at six (6) inches above ground, unless otherwise specified. Multiple stem ornamental trees shall have a minimum height of eight (8) feet at planting and a minimum of three (3) trunks with a minimum one and a half (1.5) inch caliper each, with five (5) trucks maximum.

D. Shrubs

1. Unless otherwise specified, all large deciduous and evergreen shrubs shall have minimum height of three (3) feet at installation, and all small deciduous and evergreen shrubs shall have a minimum height of eighteen (18) inches at installation.

2. Large shrubs are those species that reach five (5) or more feet in height at maturity. Small shrubs are those species that can grow up to five (5) feet in height if left unmaintained, but are generally kept at heights of eighteen (18) to thirty-six (36) inches.

E. Perennials and Groundcover

Unless otherwise specified, perennials and groundcover shall be a minimum of four (4) inch container stock.

F. Mulch

Unless otherwise specified, mulch shall be a minimum two (2) inch dressing and shall be applied on all exposed soil surfaces of planting areas, except turf, creeping or rooting groundcovers, or direct seeding applications, where mulch is contra-indicated. Mulch shall be kept from direct contact with tree trunks and organic material.

G. Irrigation

Sprinkler irrigation systems are required for landscaped areas when natural systems are not available or are not part of a stormwater BMP. The type of plant material, the condition, and growing medium where they are installed, and sun exposure shall dictate the type of sprinkler irrigation system(s). All irrigation systems shall be designed to minimize the use of water and shall be approved as part of the landscape plan. When irrigation is installed, it shall comply with the following standards:

1. Automatic controllers shall be set to water between 7:00 p.m. and 10:00 a.m. to reduce evaporation.

2. Irrigation systems shall be designed to avoid runoff, low-head drainage, overspray, or other similar conditions where water flows or drifts onto adjacent property, non-irrigated areas, walks, roadways, or structures.

3. Irrigation equipment shall comply with the following standards.

a. Low-volume irrigation systems with automatic controllers are required. Low-volume irrigation systems include low-volume sprinkler heads, dry emitters, and bubbler emitters.

b. Drip, trickle or other low-volume irrigation shall be provided on at least ninety percent (90%) of the landscape areas except for those areas devoted to turf and flat groundcover plants. If a licensed landscape architect or landscape contractor verifies that a drip or trickle system is not feasible due to location, the required percentage of drip or trickle irrigation may be reduced by technical decision of staff approving the landscape plan.

c. Integral, under-the-head, or in-line anti-drain valves shall be installed as needed to prevent low-head drainage.

d. Automatic control systems shall be able to accommodate all aspects of the design. Automatic controllers shall be digital, have multiple programs, multiple cycles, and sensor input capabilities.

e. Soil moisture sensors and rain or moisture-sensing override devices are mandatory.

f. Sprinkler heads shall be selected and spaced for proper area coverage, application rate, operating pressure, and adjustment capability. Sprinklers shall have matched precipitation and application rates within each control valve circuit.

g. Drip irrigation systems are permitted if commercial or agricultural grade materials are used. Components shall be installed below the soil except for emitters.

h. Backflow prevention devices are required.

i. Rainwater harvesting and/or dedicated landscape water meters are recommended on all landscape areas to facilitate water management and cost reduction.

H. Water Waste Prevention

Water waste resulting from inefficient landscape irrigation is prohibited. Water waste from irrigation is defined as runoff that leaves the target landscape due to low head drainage, overspray, or similar conditions where water flows onto adjacent properties, non-irrigated areas, walks, or roadways. Overspray and runoff are not considered water waste from irrigation if either one of the following conditions are met:

1. The landscape area is adjacent to semi-pervious or pervious surfaces.

2. The adjacent non-permeable surfaces are designed and constructed to drain entirely to landscape.

I. Energy Conservation

Plant material placement shall be designed to reduce the energy consumption needs of the development. Shade trees shall be included on the exposed west and south elevations when landscape is required.

J. Species Diversity

Diversity among required plant material for on-site landscape is required. This provides visual interest and reduces the risk of losing a large population of plants due to disease. Table 23-1: Diversity Requirements indicates the percentage of diversity required based on the total quantity of species being used. For example, if a development requires forty-five (45) shade trees, no more than eighteen (18) trees nor less than five (5) trees can be of one (1) species, and there shall be a minimum of five (5) different species within the forty-five (45) trees.

TABLE 23-1: DIVERSITY REQUIREMENTS			
TOTAL NUMBER OF PLANTS PER PLANT TYPE	DIVERSITY REQUIREMENTS		MINIMUM NUMBER OF SPECIES
	MAXIMUM OF ANY SPECIES	MINIMUM OF ANY SPECIES	
1-4	100%	Not Applicable	1
5-10	60%	40%	2
11-15	45%	20%	3
16-75	40%	10%	5
76-500	25%	5%	8
500-1,000	30%	5%	10
1,000+	15%	4%	15

K. Planting

In order to meet the landscaping requirements of this Ordinance, plant material shall be planted in the ground. Landscape planted within planters and raised planter boxes are not considered to meet the landscape requirements.

L. LYN Sustainable Landscaping Principles

Landscape plans shall contain ample notes, specifications, and details to guide landscape horticulturist (contractors) and landscape maintenance companies, master gardeners, general gardeners, lawn service companies, irrigation installers and property owners to do their share in getting the landscape to maintain its self in a sustainable manner subject to the landscaping principals published by the LSU AgCenter, Louisiana Yards and Neighborhoods (LYN) Program, *A Guide to Louisiana-Friendly Landscaping,* latest addition.

23.6 BUILDING FOUNDATION LANDSCAPE AND LANDSCAPE YARDS

A. Building Foundation Landscape

For all multi-family dwellings of seven (7) or more dwelling units, mixed-use developments, and non-residential uses that maintain a front or corner side yard of ten (10) or more feet and no parking is located within that front or corner side yard, the following building foundation plantings are required: (Figure 23-1: Building Foundation Landscape)

1. A single hedge row is required, planted with one (1) shrub every thirty-six (36) inches on center, spaced linearly. The shrubs shall measure a minimum of twenty-four (24) inches at planting, and a minimum of thirty-six (36) inches to a maximum of forty-eight (48) inches in height at maturity. The equivalent quantity of shrubs may be arranged at the discretion of the designer subject to approval by the City.

2. The remainder of the area shall be planted with vegetative cover.

3. These plantings may be supplemented with trees and perennials.

4. Plantings are not required where walkways and driveways are located.

FIGURE 23-1: BUILDING FOUNDATION LANDSCAPE

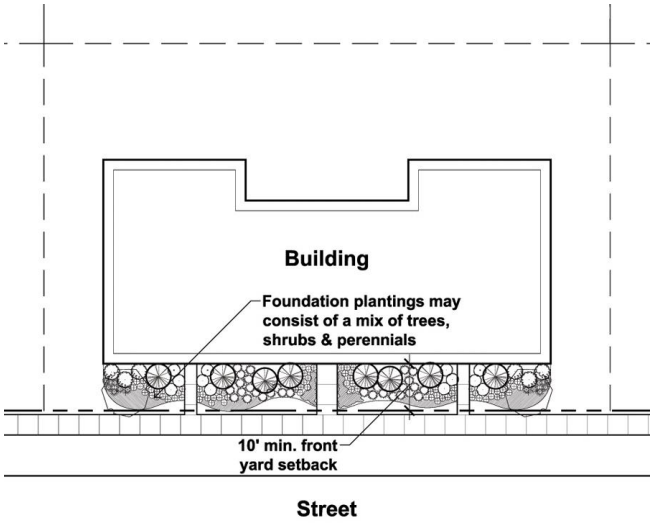

B. Front Landscape Yard

Where a multi-family dwelling of seven (7) or more dwelling units, mixed-use development, or non-residential use maintains parking in front of the principal building, a front landscape yard a minimum of ten (10) feet in width shall be installed along the front lot line. In this case, the front landscape yard requirements control rather than the perimeter parking lot landscape requirements.

1. Five (5) plant unit options are presented in Table 23-2: Plant Unit Examples. Any alternative or a combination of alternatives may be used. Plantings may be spaced at various intervals and/or clustered based on specific site requirements or design scheme, to be approved as part of the landscape plan.

2. One (1) plant unit per one-hundred (100) linear feet shall be provided.

3. When figuring the number of plant units or quantity of plant material required, the number shall be rounded up. For example, three and one-tenths (3.1) shade trees is rounded up to four (4) shade trees.

4. All plant materials, excluding trees, shall be in the bedline. All plant materials in raised planters do not meet the requirements of this section.

5. Use of rocks or bare earth in lieu of groundcover plantings may not exceed twenty percent (20%) of the total front yard landscape area, excluding driveways, walkways or other access points.

TABLE 23-2: PLANT UNIT EXAMPLES		
PLANT UNIT OPTIONS	**QUANTITY & TYPE OF PLANTS**	**ILLUSTRATION**
EXAMPLE UNIT A	1 Shade Tree 2 Ornamental Trees 20 Shrubs	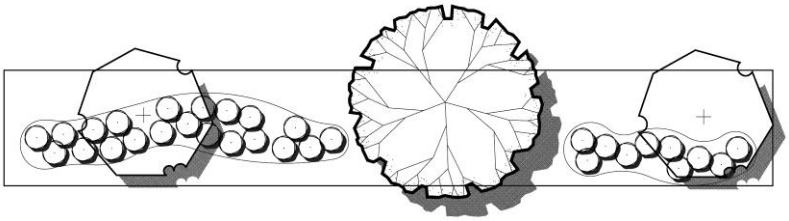
EXAMPLE UNIT B	1 Shade Tree 1 Ornamental Tree 1 Evergreen Tree 30 Shrubs	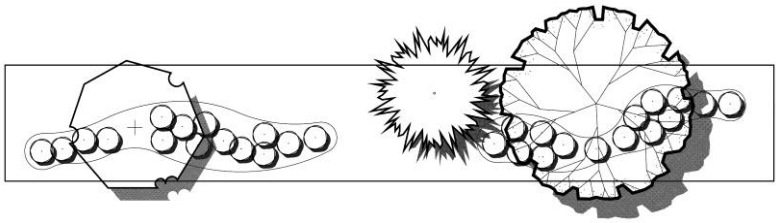
EXAMPLE UNIT C	2 Ornamental Trees 3 Evergreen Trees 25 Shrubs	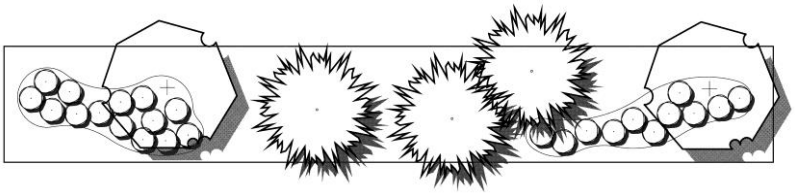
EXAMPLE UNIT D	4 Evergreen Trees 34 Shrubs	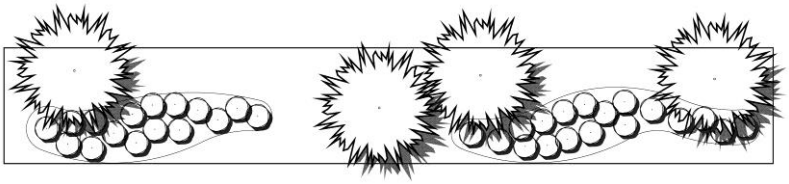

23.7 PARKING LOT LANDSCAPE

A. Required Parking Lot Landscape

1. All parking lots of ten (10) or more spaces require a landscape plan as a condition of obtaining a building permit.

2. Perimeter parking lot landscape is required for all parking lots, whether an accessory or principal use, and shall be established along the edge of the parking lot that abuts a public right-of-way, excluding alleys.

3. Interior parking lot landscape, whether an accessory or principal use, is required for parking lots of ten (10) or more spaces.

4. For existing parking lots that currently do not comply with the required parking lot landscape, such landscape shall be provided when any one (1) of the following occurs:

a. A new principal building is constructed.

b. A building addition is constructed that expands the building footprint by thirty percent (30%) or more.

c. Over fifty percent (50%) of the total area of an existing parking lot is reconstructed.

d. When an existing parking lot less than ten thousand (10,000) square feet in area is expanded by fifty percent (50%) or more in total surface area.

e. When an existing parking lot over ten thousand (10,000) square feet in area is expanded by twenty-five percent (25%) or more in total surface area.

5. When an existing parking lot is required by this section to provide landscape, which would result in creating a parking area that no longer conforms to the parking regulations of this Ordinance, the existing parking lot is not required to install all or a portion of the required landscape. The applicant is required to show that landscape cannot be accommodated on the site. If only certain requirements can be accommodated on the site, only those elements are required. The Director of Department of Safety and Permits will make the determination that all or a portion of required landscape does not have to be installed.

6. An above ground sun lit parking lot stormwater detention BMP shall be worked into the interior or the perimeter of every parking facility to capture, filter, infiltrate and store the first flush (<1.25") coming off of the parking surface. The detention BMP may be grassed or naturalized with ornamental wetland plants to reflect a Louisiana wetland environment. Outflow facilities shall be included for all storm events over 1.25" of rainfall and must be completely infiltrated and evaporated within 48 hours of the storm event.

7. Nothing in this section prevents the applicant's voluntary installation of additional parking lot landscape, so long as parking space requirements and parking lot design requirements are complied with.

B. Perimeter Parking Lot Landscape

Perimeter parking lot landscape provides for the enhancement and screening of parking lots by requiring a scheme of landscape along public streets. A perimeter landscape yard is required for all parking lots and the landscape treatment shall run the full length of the parking lot where it abuts a public right-of-way, excluding an alley. In the case of parking located at the front of the building, the front landscape yard requirements control. The perimeter parking lot landscape yard shall be improved as follows: (Figure 23-2: Parking Lot Perimeter Landscape Yard)

1. The perimeter landscape yard shall be a minimum of five (5) feet in width.

2. A single hedge row is required, planted with one (1) shrub every thirty-six (36) inches on center to form a continuous visual buffer. At the time of planting, the shrubs shall be at three (3) to five (5) gallons in size or twenty-four (24) inches in height and a minimum of thirty-six (36) inches to a maximum of forty-eight (48) inches in height at maturity.

3. A minimum one (1) foot of width of groundcover or mulch. All mulch shall derive from a living, natural source.

4. One (1) shade tree every forty (40) feet on center or one (1) ornamental tree every twenty-five (25) feet on center spaced linearly. Trees may be spaced at various intervals and/or clustered based on specific site requirements or design scheme to be approved as part of the landscape plan. Shade trees are defined as having a height of over forty (40) feet at maturity, ornamental trees are defined as having a height of less than forty (40) feet at maturity.

5. An ornamental fence a minimum of four (4) feet in height is required, subject to the following materials:

   a. Metal Picket

   b. Wood

   c. Masonry

6. Alternatively, a low pedestrian wall, the height of which provides effective screening to a maximum height of three (3) feet, may be used instead of shrubs and an ornamental fence. Where possible, plant materials shall be installed between the sidewalk and the wall to provide a softening effect on the wall.

7. All perimeter parking lot landscape areas shall be protected with raised concrete curbs.

FIGURE 23-2: PARKING LOT PERIMETER LANDSCAPE YARD

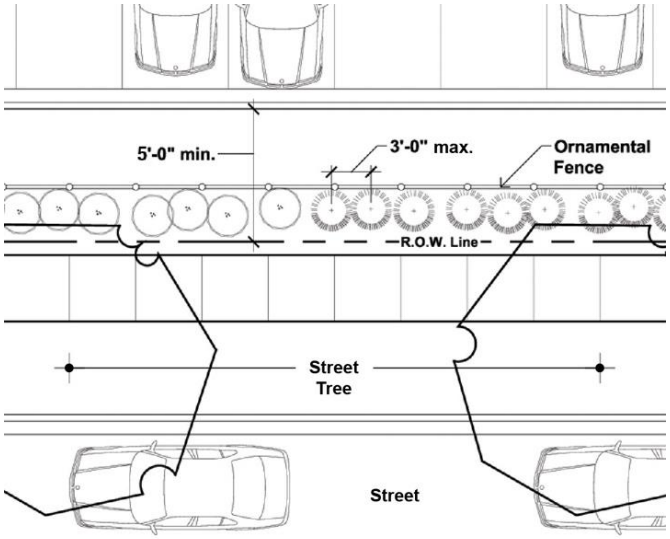

C. Interior Parking Lot Landscape

For parking lots consisting of ten (10) or more spaces, interior parking lot landscape is required. (Figure 23-3: Interior Parking Lot Landscape) However, these planting provisions may be waived if the applicant presents an alternate landscape plan that provides a combination of tree canopy, landscape design elements, and/or non-reflective auto canopies, including solar panels and solar powered electric auto recharging stations, that shade a minimum of fifty percent (50%) of the parking lot paved surface within five (5) years of completion.

1. One (1) parking lot island shall be provided between every ten (10) contiguous parking spaces. As part of the landscape plan approval, parking lot island locations may be varied based on specific site requirements or design scheme, to be approved as part of the landscape plan, but the total number of islands shall be no less than the amount required of one (1) island for every ten (10) spaces.

2. In addition to parking lot islands, additional landscaped areas shall be provided within the interior of parking lots. All rows of parking spaces shall terminate in a parking lot island or landscaped area. The minimum total landscaped area, including parking lot islands, is ten percent (10%) of the total parking lot area, excluding any area of perimeter parking lot landscape.

3. Parking lot islands or landscaped areas shall be at least one-hundred sixty (160) square feet in area. However, parking lot islands shall be the same dimension as the parking stall. Double rows of parking shall provide parking lot islands that are the same dimension as the double row.

4. Parking lot islands or landscaped areas shall be designed to apply sustainable techniques allowing the flow and access of stormwater. Such islands and landscaped areas shall be protected by tire stops or curbing with gaps that allows runoff to flow through.

5. The following plantings are required in parking lot islands and landscaped areas:

a. Trees, preferably with capacity for high water retention, shall be the primary plant materials used in parking lot islands and landscaped areas. Other plant materials may be used to supplement the shade tree plantings but shall not create visibility concerns for automobiles and pedestrians.

b. One (1) shade tree is required every parking lot island or landscaped area. If the island extends the width of a double row, then two (2) shade trees are required.

c. Shrubs shall be planted within the parking island to provide another layer of planting for visual interest.

d. A minimum of seventy-five percent (75%) of every parking lot island shall be planted in live groundcover, perennials, or ornamental grasses. Mulch is required to fill in planting areas for early growth protection until the groundcover is established and covers the planting area. It is encouraged to mulch bare areas for three (3) to five (5) years, or until the plant material is fully established in the parking islands.

FIGURE 23-3: INTERIOR PARKING LOT LANDSCAPE

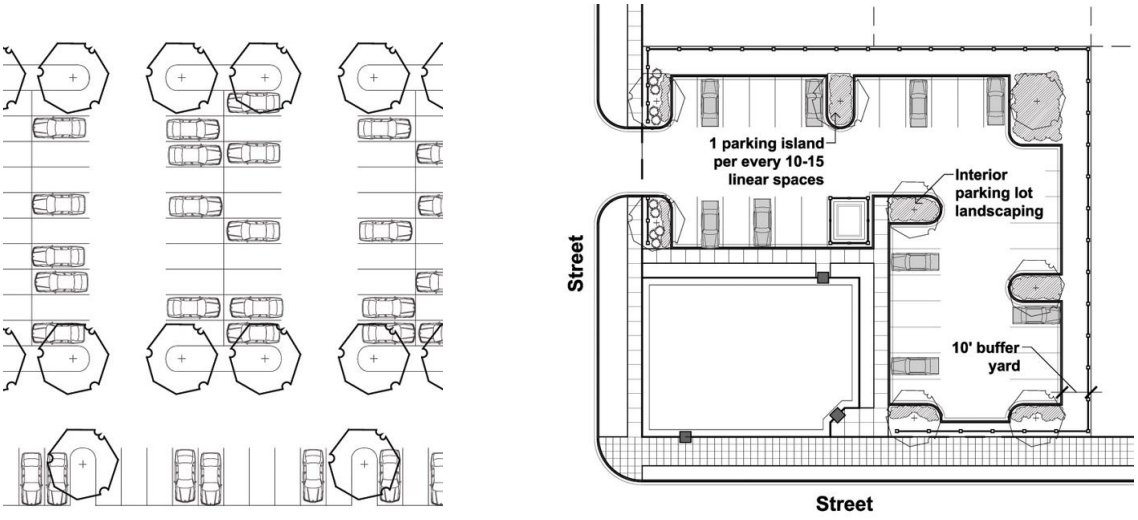

23.8 BUFFER YARDS

A. Buffer yards maintain an appropriate relationship between adjacent developments by clarifying the delineation between properties, and creating attractive and effective buffers between uses.

B. Where the parking lot of a non-residential use or district abuts a residential district, a buffer yard of ten (10) feet shall be provided along the lot line that abuts a residential district.

C. The buffer yard shall be landscaped as follows:

1. A solid fence, constructed of wood or simulated wood, or a wall a minimum of seven (7) feet in height is required. Chain-link fences are prohibited.

2. One (1) shade tree for every forty (40) feet or one ornamental tree for every twenty-five (25) linear feet of the adjacent property line. Shade trees are defined as having a height of over forty (40) feet at maturity; ornamental trees are defined as having a height of less than forty (40) feet at maturity.

3 A single hedge row planted with one (1) shrub every thirty-six (36) inches on center, spaced linearly. The shrubs shall measure a minimum of twenty-four (24) inches at planting, and a minimum of thirty-six (36) inches to a maximum of forty-eight (48) inches in height at maturity.

4. The remainder of the area shall be planted with turf or groundcover.

23.9 REQUIRED LANDSCAPE ILLUSTRATION

Figure 23-4: Landscape Requirements illustrates the location of the landscape requirements in this Article.

FIGURE 23-4: LANDSCAPE REQUIREMENTS

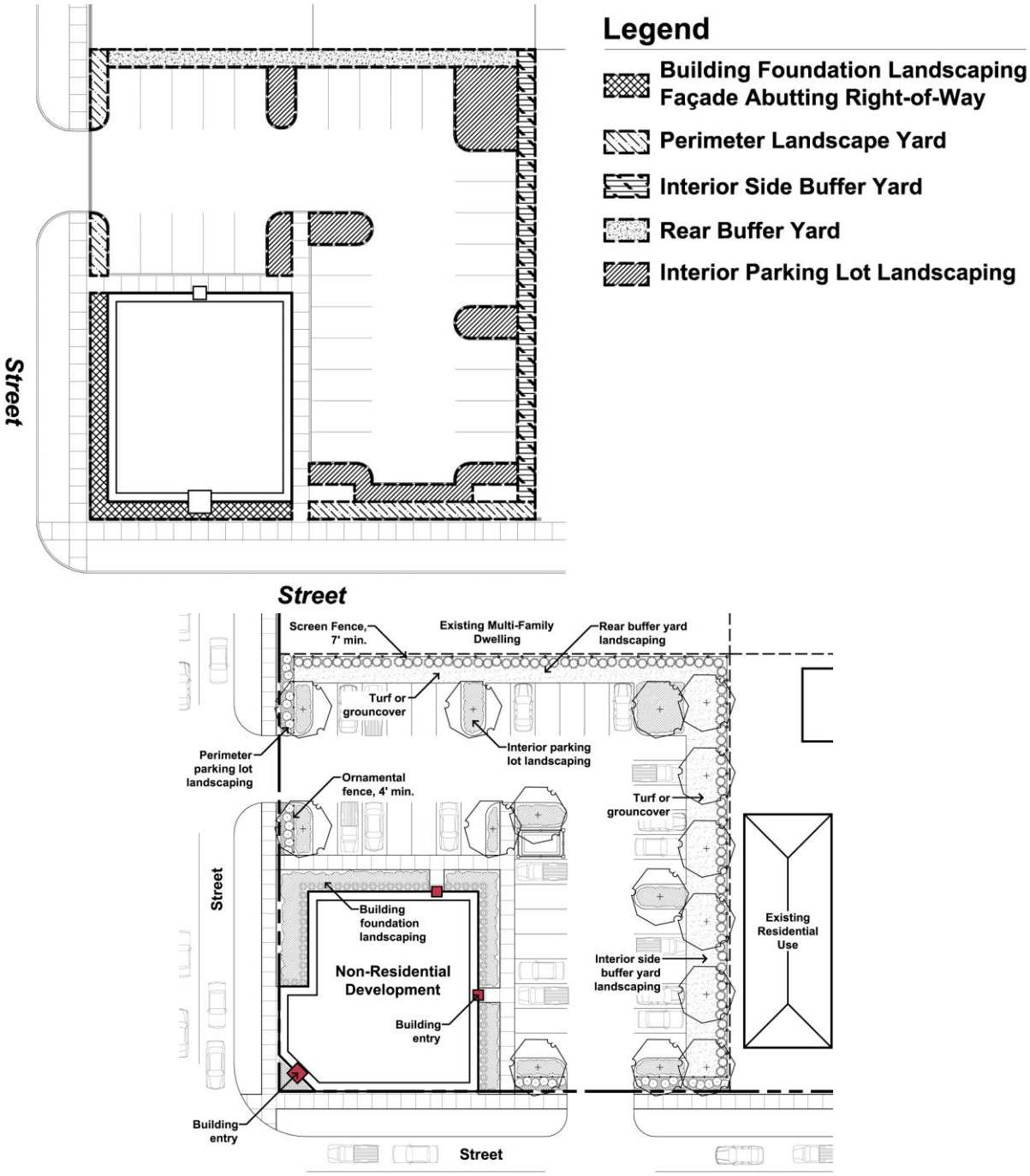

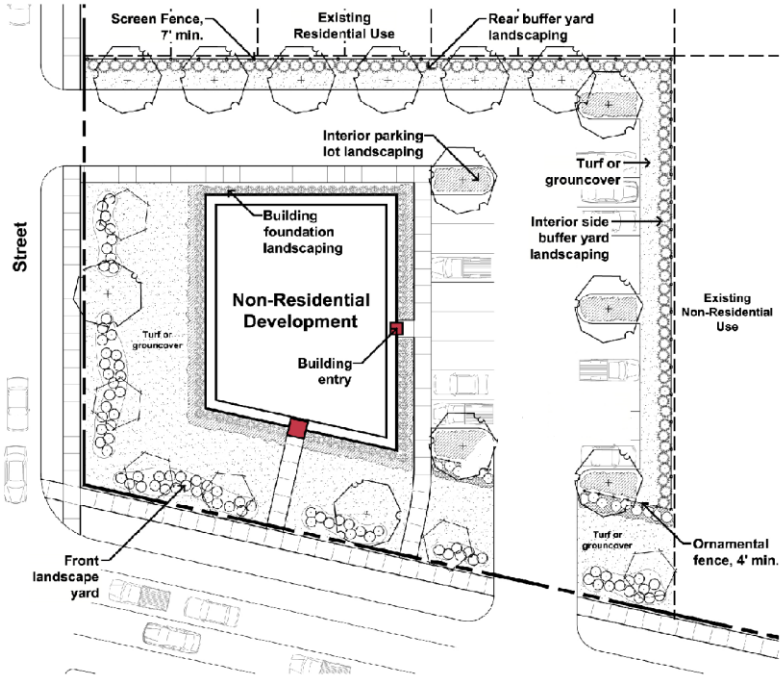

23.10 TREE PRESERVATION

A. Approval of a landscape plan requires preservation of all public right-of-way or street trees with a diameter at breast height of over six (6) inches, subject to the exceptions granted in this ordinance. Such trees shall be protected during construction in accordance with the requirements of the City Code and the Department of Parks and Parkways Section 02480 "Landscape Protection During Construction."

B. Trees may only be removed in one (1) of the following situations. The Executive Director of the City Planning Commission, as part of landscape plan approval, may approve tree removal. The Director may consult the Department of Parks and Parkways to verify that tree removal is necessary.

1. The tree poses a hazard. In order to verify that a hazard exists, the City may require a tree hazard assessment to be performed by a qualified arborist.

2. The tree is planted too close to an existing structure, such that it is either damaging or has the clear potential to damage the structure.

3. The roots of the tree are causing damage to paved areas or sewer and plumbing lines.

4. The tree has an incurable disease or pest infestation that cannot be eliminated. The City may require this condition to be verified by a qualified arborist.

5. The tree is out of keeping in character with a proposed comprehensive landscape plan or with an otherwise cohesive existing landscape.

6. The tree has been damaged to the point that it cannot recover and grow properly, or it will grow in a misshapen or unsightly manner.

7. The Executive Director of the City Planning Commission determines that the removal of the tree is necessary to carry out construction in compliance with approved plans.

C. A tree that is removed shall be replaced with a tree of a species and in a location to replace the removed tree without posing the hazards for which the tree was removed.

D. The Executive Director of the City Planning Commission may allow trees to be replaced with other types of landscape if one (1) of the following conditions are met:

1. The property includes other trees that provide sufficient shade so that additional trees are not necessary.

2. If a replacement tree would be out of character in conjunction with an approved landscape plan.

3. If in the opinion of the Executive Director of the City Planning Commission there is no suitable location on the property for a replacement tree.

E. Clear-cutting of forests is prohibited, unless the property owner has an forest management plan, prepared by a licensed forester, which includes a replanting plan. The forest management plan shall be approved by the State Department of Agriculture

23.11 PARKWAY TREES

The following requirements apply to parkways (i.e., those areas within the public right-of-way located between the curb and the sidewalk) within the Central Business District and Commercial Center and Institutional Campus Districts. All parkways shall be landscaped in conformance with this Ordinance, all provisions of the City Code, and with the approval of the Department of Parks and Parkways.

A. Parkway trees shall be planted at the equivalent of one (1) tree for every forty (40) linear feet for shade trees and every twenty-five (25) linear feet for ornamental trees. Where appropriate, parkway trees may be clustered or spaced differently as determined appropriate or necessary by the Department of Parks and Parkways. Shade trees are defined as having a height of over forty (40) feet at maturity; ornamental trees are defined as having a height of less than forty (40) feet at maturity.

B. A variety of compatible species should be included in the planting plan for a specific site or development. The selecting of tree species shall be reviewed and approved by the Department of Parks and Parkways with particular regard for site-appropriate species.

23.12 STORMWATER MANAGEMENT REQUIREMENTS

A. Stormwater Management Measures

1. Effective on-site stormwater management is supported by a combination of stormwater BMPs, as outlined in Section 23.12(B), guided by the following strategies:

a. First, create conditions that allow detention and infiltration of stormwater runoff on-site through the use of pervious paving, open vegetated areas, green roofs, blue roofs, and other methods that allow water to permeate back into the ground.

b. Next, additional stormwater runoff should be detained, stored, infiltrated, and/or filtered through the use of BMPs.

c. Finally, runoff in excess of the first one and one quarter (1.25) inch shall exit the site through surface or subsurface drainage.

2. Infiltration practices shall be utilized to reduce runoff volume increases, stabilize sub-soils, and recharge shallow groundwater.

3. Best Management Practices (BMP) shall be employed to minimize pollutants in stormwater runoff prior to discharge into a separate storm drainage system or water body.

4. All stormwater management facilities shall be designed to provide an emergency overflow system, and incorporate measures to provide a non-erosive velocity of flow along its length and at any outfall.

5. The designed release rate of any stormwater structure shall be modified if any increase in flooding or stream channel erosion would result at a downstream dam, highway, structure, or normal point of restricted stream flow.

B. Stormwater Best Management Practices

Stormwater best management practices (BMP) minimize runoff, increase infiltration, recharge groundwater, and improve water quality. In order to accomplish the performance standard required by this section, stormwater BMPs shall be used. Stormwater BMPs shall be designed as described in "Bayou Land RC&D Stormwater BMP Guidance Tool." Alternate BMPs may be considered but shall be approved as part of the stormwater management plan. The following list of stormwater BMPs are not prescriptive, but provide guidance for establishing a site-specific stormwater management regime, and include, but are not limited to:

1. Bioswales

Bioswales are vegetated swales planted with native plants or ornamental grasses. They transport water, allow some to infiltrate, and can be designed as a landscape feature. Bioswales are not grassed but are planted with a variety of wetland plant species that flower, fruit, and have ornamental qualities.

2. Circular Depressions

Circular grassed depressions are similar to rain groves, but are smaller and contain only grass within the depressions. It is preferable to use multiple circular grassed depressions. Circular grassed depressions should be six (6) inches deep and range in diameter from thirty-six (36) inches to seventy-two (72) inches.

3. Constructed Wetlands

Constructed wetlands, such as wet ponds, are commonly used on large development projects such as golf courses, shopping centers, business parks and industrial sites. These wetlands shall be designed as part of an integrated drainage system, built around lakes and ponds that may include detention areas, retention areas, irrigation ponds, or low-lying areas that collect and store stormwater.

4. Detention/Retention Basins

a. Wet retention basins are constructed, naturalistic ponds with a permanent or seasonal pool of water (also called a "wet pool" or "dead storage"). Aquascape facilities, such as artificial lakes, are a form of wet pool facility that can incorporate innovative design elements to allow them to function as a stormwater treatment facility in addition to a water feature.

b. Dry extended detention (ED) basins are basins whose outlets have been designed to drain from a full condition within thirty-six (36) to forty-eight (48) hours to allow sediment particles and associated pollutants to settle and be removed. Dry ED basins to not have a permanent pool and are designed to drain completely between storm events. The slopes, bottom, and forebay of dry ED basins should be vegetated.

5. Disconnected Roof Tops, Recycling, and Irrigation

A disconnected roof top is one where stormwater falling on a building roof is captured and prevented from being added to stormwater runoff from a construction site. Since the water is relatively clean, it can be reused for certain domestic use or recycled through an irrigation system for evaporative disposal or to feed moisture to landscape beds, lawns, and tree stands.

6. Ditch Gardens

Louisiana ditch gardens are a variant of a bioswale that increases water quality. These are constructed by designing long thin but shallow depressions that can be planted with Louisiana wetland plants that trap sediments, infiltrate water, and clean water of pollutants.

7. Flow Diffusers

Flow diffusers consist of several design features that can accept channelized flow and convert it to sheet flow to disengage the erosive power of running water. Examples of flow diffusers include turf grass panels, vegetative meadows, shallow stone filtration trenches, or basins reinforced with very low earth berms.

8. French Drains, Infiltration Trenches, and Dry Wells

Infiltration trenches are excavated into the ground either horizontally or vertically and filled with stone aggregate to capture and allow exfiltration of stormwater runoff into the surrounding soils from the bottom and sides of the trench or well. Pollutant removal is achieved by filtration of the runoff through the stone aggregate and soil, as well as biological and chemical activity within the soil. This is called a French drain in Louisiana, and can be fitted with an outflow if soil types warrant such treatment.

9. Grassed Swales

Grassed swales are designed conveyance devices used to transport water over the surface of the ground to a point of disposal that may be a catch basin, ditch, water body, or a stormwater BMP that will filter, infiltrate, evaporate, and clean the water of TSS, solid waste, and other pollutants. Swales are often appropriate along property lines, public streets, and around buildings.

10. Habitat Preservation and Protection Areas

Habitat Protection Areas (HPA) are large tree protection areas in which a complete habitat of plants, soils, water regimes, animal life, and nutrients work together to produce clean air, pure water, rich soils, and a population of animal life living and growing off of the biological productivity and diversity.

11. Permeable Pavers, Porous Surfaces, Grass Paving, and Structural Soils

Porous paving reduces site runoff and allows the infiltration of stormwater. Structural soils are designed to bear the weight of heavy construction such as parking lots, terraces, and courtyard, but also provide void space for tree roots and stormwater infiltration.

12. Planted Stormwater Buffers

Planted stormwater buffers can absorb stormwater falling on development sites. Planted buffers can improve internal drainage and be linked for maximum stormwater collection during rainfall events. Buffers can be built for stormwater management along roadways, at property edges, parallel to walkways, driveways, structures, and almost any place on a development site in which open space can be found that can be planted.

13. Preserved Forest Floors

Rain falling on the tree canopy is managed as soon as raindrops fall on leaves and continues until the roots uptake the water hours after the storm event. This preserves trees and manages stormwater, as well as preserves natural habitat and remnant forest stands on development sites.

14. Preserved Wetlands

Wetlands are characterized as vegetated parcels of land that have standing water for part of the year. Wetlands are also delineated according to existing vegetation and soil types. The Army Corps of Engineers designate a wetland as any low area meeting certain jurisdictional requirements of water, soil, and vegetation. Wetlands within cities are often low areas that trap and hold rainfall and release it at very slow rates of water flow.

15. Rain Gardens

Rain gardens are small shallow depressions planted with a variety of native or ornamental plants that can treat small amounts of runoff to improve water quality. Rain gardens are generally small collections of water loving plants planted on a low site area that naturally collects rainfall.

16. Rain Groves

Rain groves are miniature forests that provide multiple services. They provide habitat for birds and other fauna that live close to developed areas. A rain grove will intercept runoff to provide a suitable habitat to grow a variety of wetland trees and shrubs.

17. Rooftop Runoff Management

Rooftop runoff management captures stormwater through a variety of techniques, including green roofs, blue roofs, cisterns, and rain barrels.

18. Sand Filters

Sand filters are depressions, trenches, barriers, or sand lens constructed of porous mineral matter that improve groundwater recharge to filter, clean, and trap waterborne pollutants.

19. Stream Bank or Riparian Buffers

A stream bank buffer is a protected area along a waterbody, such as a stream, bayou, pond, or lake, where development is restricted or prohibited. They can vary in width from twenty (20) feet to two-hundred fifty (250) feet. The width of the buffer zone is dependent upon the size of the stream, its drainage load, and overflow characteristics, although other factors such as slope, soils, and amount of vegetation are considered.

20. Tree Protection Areas

Tree Protection Areas (TPA) are small Habitat Preservation Areas (HPA) that are set aside as an area around the trunk of a tree to be preserved on a development site. The purpose of the TPA is to protect the critical root zone (CRZ) of the tree and to prevent damage or interference during construction. This area is established in relation to the tree size, diameter of the crown, diameter of the tree at DBH, and location of feeder roots where most of the water and plant nutrients are absorbed.

21. Cisterns and Underground Stormwater Chambers

Aboveground stormwater cisterns and underground stormwater chambers are effective long-term stormwater management systems. They are primarily used for landscape irrigation with grey water, or to temporarily store and release at a predictable rate of stormwater flow.

23.13 SCREENING REQUIREMENTS

A. Refuse Disposal Dumpsters, Recycling Containers, and Refuse Storage Areas

All refuse and recycling containers shall be fully enclosed on three (3) sides by a solid fence, a masonry wall, or principal structure wall seven (7) feet in height. The enclosure shall be gated. The materials used for screening, including the enclosure, shall complement the architecture of the principal building. An extension of an exterior principal building wall may be used as one of the screening walls for a refuse container, provided that the wall meets the minimum seven (7) foot height requirement and is of the same building materials as the principal building. The wall may not serve as the required gated enclosure.

B. Loading Berths

Where feasible, loading berths shall be located and oriented so as not be visible from the street and adjacent properties, while still allowing access to the use served. In addition, loading berths shall be screened as much as possible, unless such screening is determined unnecessary by the body approving the landscape plan. Such screening shall consist of a masonry wall or a solid fence at least seven (7) feet in height.

C. Outdoor Storage and Display Areas

1. Outdoor Storage Areas

a. All outdoor storage areas shall be completely screened by an opaque masonry wall of stone, stucco, or brick, or a solid fence of wood or simulated wood no less than seven (7) feet in height. Where feasible, plant materials shall be installed along the fence or wall located along the public right-of-way to provide a softening effect. No materials stored outdoors may exceed the height of the required fence or wall with the exception of construction material.

b. Outdoor storage areas shall provide landscape and shading of the interior with a combination of tree canopy and non-reflective canopies covering twenty-five percent (25%) of the site.

2. Outdoor Sales and Display Areas

a. When the rear or interior side yard of an outdoor display area abuts a residential district, the outdoor display area shall be effectively screened from view by a masonry wall, solid fence, or dense evergreen hedge at least seven (7) feet in height.

b. All outdoor display areas shall be designed with a landscape yard along the public right-of-way, excluding alleys, a minimum of ten (10) feet in width and planted with shade or evergreen trees at a rate of one (1) tree per twenty-five (25) feet, and supplemented with shrubs and perennials to enhance the view from the public right-of-way. These screening requirements are not intended to prohibit openings necessary for access drives and walkways.

c. Motor vehicle dealerships or rental establishments with outdoor sales and display lots shall be designed with permanent screening along the right-of-way, excluding alleys. The screening shall consist of small shrubs and an ornamental fence or a low pedestrian wall no less than three (3) foot in height. Shrubs shall be planted with one (1) shrub every thirty-six (36) inches on center, spaced linearly. The shrubs shall measure a minimum of twenty-four (24) inches at planting, and a minimum of thirty-six (36) inches to a maximum of forty-eight (48) inches in height at maturity.

d. Growing areas for nursery stock located in the front or corner side yard are considered to meet outdoor sales and display screening requirements.

Appendix B: Site Photos



Top of ramp looking SE into C7



View from walkway along SW edge of C7 looking NW toward levee road



View of manhole within C7 looking SE



View along levee road looking NE

SEWERAGE and WATER BOARD

of

NEW ORLEANS

VOLUME 3

CONTRACT DRAWINGS

OF THE

CONTRACT DOCUMENTS

FOR

CONTRACT 1444

WEST POWER COMPLEX @ CWTP

FUEL OIL DELIVERY SYSTEM

Issued for Bid

August 2026

SEWERAGE AND WATER BOARD OF NEW ORLEANS

ENGINEERING DEPARTMENT

CONTRACT 1444
WEST POWER COMPLEX AT CWP
FUEL OIL DELIVERY SYSTEM

PROJECT TEAM:

WSP USA INC.
ONE PENN PLAZA, 11TH FLOOR,
NEW YORK, NY 10119
CERTIFICATE OF REGISTRATION # EF.0000023

Infinity Engineering Consultants, LLC
Civil | Structural | Mechanical | Electrical | Marine | Transportation
Metairie, LA www.infinityec.com 504-304-0548

Jacobs

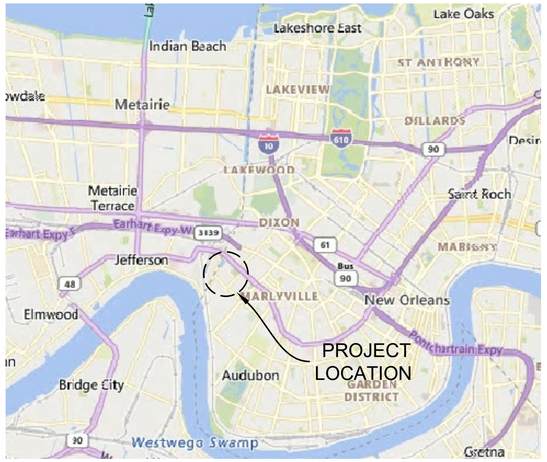

VICINITY MAP

SCALE: NTS

CARROLLTON WATER PURIFICATION PLANT
8800 S. CLAIBORNE AVENUE

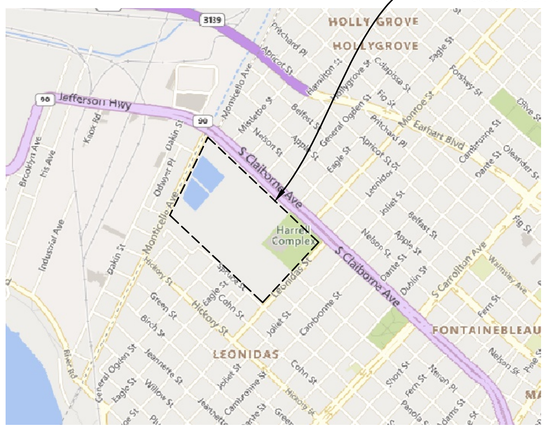

LOCATION MAP

SCALE: NTS

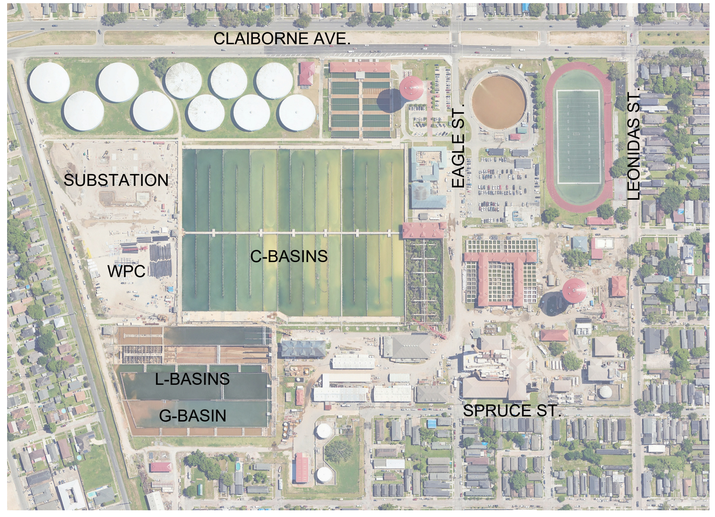

PLANT MAP

SCALE: NTS

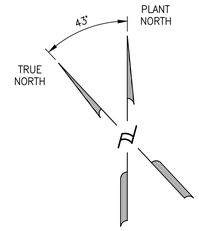

THIS ACKNOWLEDGES THAT THE ATTACHED DRAWINGS HAVE BEEN RECEIVED BY THE SEWERAGE & WATER BOARD OF NEW ORLEANS AND HEREBY FORWARDED FOR PROCUREMENT.
THE SEWERAGE & WATER BOARD OF NEW ORLEANS DOES NOT RELEASE CONSULTANT/DESIGNER FROM ANY LEGAL LIABILITY THAT MAY ARISE FROM THE BOARD'S ACCEPTANCE OR USE OF THE ATTACHED DRAWINGS FOR THEIR INTENDED PURPOSE.

GENERAL SUPERINTENDENT

REV.	DATE	DESCRIPTION	BY
0	03/11/2026	ISSUED FOR BID	LEK

LAURA ELIZABETH KELLY
License No. 39645
PROFESSIONAL ENGINEER
IN
MECHANICAL ENGINEERING
3/11/2026

WSP USA INC.
ONE PENN PLAZA, 11TH FLOOR,
NEW YORK, NY 10119
CERTIFICATE OF REGISTRATION # EF.0000023

Infinity Engineering Consultants, LLC
Civil | Structural | Mechanical | Electrical | Marine | Transportation
Metairie, LA www.infinityec.com 504-304-0548
FIRM No. LA – EF. 0003109

DATE	03/11/2026	JOB NO.	22-017
DESIGNED BY: L. KELLY			
FILE NAME: Title Sheet & Location Maps.dwg			

SEWERAGE AND WATER BOARD OF NEW ORLEANS

CONTRACT No. 1444
WEST POWER COMPLEX @ CWPT
FUEL OIL DELIVERY SYSTEM

TITLE

TITLE SHEET & LOCATION MAPS

DR.	F. CHERRY
CK:	L. KELLY
AP:	L. KELLY
LAST EDIT:	
SCALE:	AS NOTED
DATE:	03/11/2026

A/E DWG NO.
T1.00

DWG. No. 12196-W-24

SET NO: SHEET NO: 1 OF 72

BID PACKAGE - NOT FOR CONSTRUCTION

DRAWING INDEX–OUTSIDE WPC

SHEET NUMBER	SHEET TITLE
TITLE	
T1.00	TITLE SHEET & LOCATION MAPS
T2.00	DRAWING INDEX
GENERAL	
G1.00	GENERAL NOTES
G2.00	OVERALL SITE PLAN
MECHANICAL	
M1.00	MECHANICAL NOTES & LEGEND
M3–0–1	PIPING AND INSTRUMENTATION DIAGRAM LEGEND
M3–0–2	PIPING AND INSTRUMENTATION DIAGRAM LEGEND
M3–2	PIPING AND INSTRUMENTATION DIAGRAM FUEL OIL
M2.00	OVERALL PIPING PLAN
M2.01	UNDERGROUND PIPING PLAN
M2.02	UNDERGROUND PIPING PLAN
M2.03	UNDERGROUND PIPING PLAN
M2.04	UNDERGROUND PIPING PLAN
M2.05	UNDERGROUND PIPING PLAN
M2.06	UNDERGROUND PIPING PLAN
M2.07	ABOVEGROUND PIPING PLAN
M2.08	ABOVEGROUND PIPING PLAN
M2.09	ABOVEGROUND PIPING PLAN
M2.10	ABOVEGROUND PIPING PLAN
M2.11	ABOVEGROUND PIPING PLAN
M2.12	UNDERGROUND PIPING PLAN
M2.13	UNDERGROUND PIPING PLAN
M2.14	UNDERGROUND PIPING PLAN
M2.15	FUEL STORAGE CONTAINMENT PIPING PLAN
M2.16	FUEL STORAGE CONTAINMENT PIPING PLAN
M3.00	CROSS SECTIONS
M3.01	CROSS SECTIONS
M3.02	CROSS SECTIONS
M3.03	PIPING SECTIONS
M3.04	PIPING SECTIONS
M4.00	TP–05 LOCATION PLAN & DETAILS
M4.01	TP–06 LOCATION PLAN & DETAILS
M4.02	TP–07 LOCATION PLAN & DETAILS
M4.03	TP–08 LOCATION PLAN & DETAILS
M5.00	PIPE SUPPORT DETAILS
STRUCTURAL	
S00–01	STRUCTURAL GENERAL NOTES
S00–02	STRUCTURAL STEEL GENERAL NOTES
S00–03	STRUCTURAL STEEL GENERAL NOTES
S03–07–01	STRUCTURAL FUEL FORWARDING PUMP PLATFORM FRAMING PLAN
S04–07–01	STRUCTURAL FUEL FORWARDING PUMP PLATFORM SECTIONS
S05–00–01	STRUCTURAL HORIZONTAL AND VERTICAL BRACING CONNECTION DETAILS
S05–00–02	STRUCTURAL GUARDRAIL DETAILS
S05–00–03	STRUCTURAL GRATING DETAILS
S05–00–04	STRUCTURAL LADDER DETAILS
ELECTRICAL	
E01–40	ONE LINE DIAGRAM MCC – G3/G4 & FUEL FORWARDING SKID
E13–20	BLOCK DIAGRAM FUEL OIL LEAK DETECTION SYSTEM
E1.00	GENERAL NOTES
E1.10	GENERAL LEGEND & ABBREVIATIONS
E3.00	ELECTRICAL KEY PLAN
E3.10	ELECTRICAL PLAN 1
E3.20	ELECTRICAL PLAN 2
E3.30	ELECTRICAL PLAN 3
E3.40	ELECTRICAL PLAN 4
E3.50	ELECTRICAL PLAN 5
E6.00	CONDUIT–CABLE SCHEDULE

DRAWING INDEX–INSIDE WPC

SHEET NUMBER	SHEET TITLE
P001	P&ID LEGEND
P550	FUEL OIL
P080	SEQUENCE OF OPERATIONS
M110	ABOVEGROUND PIPING KEY PLAN
M111	ABOVEGROUND PLAN – WPCAUX
M500	MECHANICAL DETAILS
M601	EQUIPMENT SCHEDULE
M603	PIPING SPECIFICATION
IC001	NETWORK SYMBOLS AND LEGENDS
IC100	NETWORK OVERVIEW
IC700	ELECTRICAL DISTRIBUTION
IC702	FIBER COMMUNICATION DETAILS
IC711	GROUNDING AND BONDING DETAIL
IC712–IC715	I&C STANDARD DETAILS

REV.	DATE	DESCRIPTION	BY
0	03/11/2026	ISSUED FOR BID	LEK

STATE OF LOUISIANA
LAURA LYMAN KELLY
License No. 59645
PROFESSIONAL ENGINEER
IN
MECHANICAL ENGINEERING
3/11/2026

WSP USA INC.
ONE PENN PLAZA, 4TH FLOOR,
NEW YORK, NY 10119
CERTIFICATE OF REGISTRATION # EF.0000923

FIRM No: LA – EF. 0003109
Infinity Engineering Consultants, LLC
IEC Project No. 21-017
Civil | Structural | Mechanical | Electrical | Marine | Transportation
Metairie, LA www.infinityec.com 504-304-0548

DATE	03/11/2026	JOB NO.	22-017

DESIGNED BY: L. KELLY
FILE NAME: Drawing Index.dwg

SEWERAGE AND WATER BOARD OF NEW ORLEANS

CONTRACT No. 1444
WEST POWER COMPLEX @ CWPT
FUEL OIL DELIVERY SYSTEM

TITLE

DRAWING INDEX

DR:	Q. VU
CK:	L. KELLY
AP:	L. KELLY
LAST EDIT:	
SCALE:	AS NOTED
DATE:	03/11/2026

A/E DWG NO.: T2.00

DWG. No. 12196-W-24

SET NO: SHEET NO: 2 OF 72

BID PACKAGE - NOT FOR CONSTRUCTION

1.0 ENGINEERING LAYOUT

1.1 THE CONTRACTOR SHALL BE RESPONSIBLE TO VERIFY THE PROJECT TEMPORARY BENCH MARKS SHOWN ON PLAN WITH THE PERMANENT BENCH MARK INDICATED ON THE INDEX SHEET.

1.2 THE CONTRACTOR SHALL BE RESPONSIBLE FOR LAYING OUT THE WORK AND VERIFYING ALL MEASUREMENTS, EXISTING ELEVATIONS, AND GRADES PRIOR TO BEGINNING OF CONSTRUCTION. IT SHALL BE THE RESPONSIBILITY OF THE CONTRACTOR TO ESTABLISH THE PROJECT CENTERLINE AND ADDITIONAL TEMPORARY BENCH MARKS FOR CONSTRUCTION PURPOSES BEFORE DESTROYING EXISTING MONUMENTS/NAILS/CROSS CUTS, ETC..

1.3 THE LINES AND GRADES SHOWN ON THE PLANS MAY BE VARIED SLIGHTLY BY THE ENGINEER IN THE FIELD IF CONDITIONS JUSTIFY SUCH A VARIATION. THE CONTRACTOR SHALL NOT BE ENTITLED TO AN EXTRA PAYMENT OTHER THAN WHATEVER CHANGE IN CONTRACT QUANTITIES IS INVOLVED.

1.4 THE EXISTING PLAN IS DOCUMENTED ON THE DRAWINGS IN ACCORDANCE WITH A LIMITED NUMBER OF AVAILABLE ORIGINAL CONSTRUCTION DRAWINGS AND FIELD INVESTIGATIONS. VARIANCE OF ACTUAL EXISTING CONDITIONS FROM THOSE ILLUSTRATED ON THESE DOCUMENTS MAY OCCUR. THE GENERAL CONTRACTOR SHALL VERIFY EXISTING CONDITIONS PRIOR TO COMMENCING WORK AND REPORT ANY AND ALL DISCREPANCIES TO THE OWNER OR OWNER'S REPRESENTATIVE.

2.0 UTILITIES

2.1 IT SHALL BE THE RESPONSIBILITY OF THE CONTRACTOR TO VERIFY LOCATION AND DEPTH OF ALL EXISTING UTILITIES BEFORE STARTING CONSTRUCTION. THE SEWERAGE AND WATER BOARD IS NOT RESPONSIBLE FOR ACCURACY OF THE LOCATION OF THESE UTILITIES SHOWN ON THE PLANS. THE CONTRACTOR IS CAUTIONED THAT MANY OF THE UNDERGROUND UTILITY PIPES, LINES, CONDUITS, CABLES, ETC., ARE LOCATED IMMEDIATELY BELOW THE EXISTING GRADE.

2.2 THE CONTRACTOR SHALL BE RESPONSIBLE FOR DAMAGE TO EXISTING UTILITIES WHICH OCCURS DURING CONSTRUCTION AND SHALL IMMEDIATELY REPORT ANY DAMAGE TO THE UTILITY ENTITIES. ALL REPAIRS OF THE DAMAGED UTILITIES SHALL BE DONE BY THE RESPECTIVE UTILITY ENTITY, EXCEPT S&WB POWER FEEDER, WHICH SHALL BE REPAIRED BY THE CONTRACTOR. ALL REPAIR COSTS SHALL BE BORNE BY THE CONTRACTOR.

2.3 ALL PRIVATELY OWNED UTILITY MANHOLES AND OTHER STRUCTURES WILL BE ADJUSTED BY THE UTILITY COMPANIES. IT SHALL BE THE RESPONSIBILITY OF THE CONTRACTOR TO CONTACT THE UTILITY COMPANIES AND REQUEST THE NECESSARY ADJUSTMENTS. THE ABOVE REQUEST SHALL BE MADE AT LEAST 2 WEEKS PRIOR TO CONSTRUCTION IN AREA OF CONFLICT TO ALLOW THE REQUIRED UTILITY COMPANY SUFFICIENT TIME FOR PERFORMING THE WORK.

3.0 SEWERAGE & WATER BOARD ITEMS

3.1 CONTRACTOR SHALL BE AWARE THAT THE CARROLLTON WATER TREATMENT PLANT IS A FULLY OPERATIONAL PLANT WHOSE OPERATIONS MUST BE MAINTAINED AT ALL TIMES. SHOULD ANY TEMPORARY SHUT DOWNS BE REQUIRED TO COMPLETE THE WORK SPECIFIED, APPROVAL FROM THE OWNER WILL BE PROVIDED IN WRITING.

3.2 THE CONTRACTOR SHALL BE AWARE THAT THE OWNER HAS THE SOLE DISCRETION TO ALLOW ANY TEMPORARY SHUT DOWN TO PLANT OPERATIONS.

3.3 THE OWNER WILL WORK WITH THE CONTRACTOR TO THE GREATEST EXTENT POSSIBLE TO ALLOW FOR ANY TEMPORARY SHUT DOWNS. THERE WILL BE NO ADDITIONAL COST INCURRED TO THE OWNER SHOULD A SHUT DOWN NOT BE ALLOWED AT A TIME CONDUCIVE TO THE CONTRACTOR'S SCHEDULE.

3.4 CONTRACTOR SHALL COORDINATE AND COMPLY WITH ALL OWNER REQUIREMENTS FOR SITE ACCESS AND PLANT OPERATIONS THROUGHOUT CONSTRUCTION.

3.5 STAGING AREAS SHALL BE COORDINATED WITH OWNER PRIOR TO MOBILIZATION OF ANY MATERIAL, EQUIPMENT, PERSONNEL, ETC. OWNER MAY REQUIRE THE CONTRACTOR TO RELOCATE STORED MATERIALS THAT ARE IN CONFLICT WITH PLANT OPERATIONS DURING CONSTRUCTION, AT NO ADDITIONAL COST TO THE OWNER.

3.6 AT NO TIME DURING CONSTRUCTION SHALL THE CONTRACTOR IMPEDE ACCESS TO ANY BUILDINGS, ROADS, STRUCTURES, PIPING, TRANSFORMERS, RAILS, ETC IN AREAS NOT DESIGNATED AS A STAGING AREA WITHOUT PRIOR OWNER CONSENT.

3.7 DESIGN AND CONSTRUCTION SHALL COMPLY WITH THE PROJECT SPECIFICATIONS, THESE GENERAL NOTES, AND ALL CURRENT VERSIONS OF THE APPLICABLE FEDERAL, STATE, AND LOCAL CODES. CONTRACTOR SHALL NOTIFY ENGINEER OF ANY DEFICIENCIES OR CONFLICTS PRIOR TO THE COMPLETION OF WORK.

3.8 ALL WORK TO BE PERFORMED IN ACCORDANCE WITH THE CURRENT GENERAL SPECIFICATIONS AND THE STANDARD DRAWINGS OF THE S&WB OF NEW ORLEANS, LOUISIANA EXCEPT WHERE OTHERWISE NOTED IN THE CONSTRUCTION DOCUMENTS.

3.9 THE LOCATION OF EXISTING UTILITIES SHOWN ARE APPROXIMATE. THE CONTRACTOR SHALL VERIFY THE SAME AND SHALL TAKE NECESSARY PRECAUTIONS TO PROTECT THEM.

3.10 THE CONTRACTOR SHALL VERIFY ELEVATION OF EXISTING INVERTS THAT ARE A PART OF THIS JOB. PRIOR TO INSTALLING NEW UTILITY, CONTRACTOR SHALL REPORT ANY DISCREPANCIES TO THE ENGINEER.

3.11 ALL CHANGES FROM THESE DRAWINGS MUST BE APPROVED BY THE S&WB PRIOR TO BEGINNING THE CONSTRUCTION WITH WHICH THEY ARE CONCERNED.

3.12 THE CONTRACTOR SHALL NOTIFY THE CHIEF OF ENGINEERING OF THE S&WB IN WRITING NOT LESS THAN THREE (3) NOR MORE THAN TEN (10) WORKING DAYS IN ADVANCE OF STARTING THE CONSTRUCTION.

3.13 BEFORE FINAL INSPECTION OF THE WORK, THE CONTRACTOR SHALL SUBMIT AN "AS-BUILT" DRAWING TO THE S&WB SHOWING CHANGES IN LINE OR GRADE FROM THE ORIGINAL DRAWINGS.

3.14 THE CONTRACTOR IS HEREBY ADVISED THAT CONTINUOUS OPERATION OF THE DRAINAGE, SEWER, POWER AND WATER SYSTEMS ARE VITAL TO THE HEALTH, SAFETY AND WELFARE OF THE CITY OF NEW ORLEANS. THE CONTRACTOR SHALL PERFORM NO WORK OR CAUSE ANY SYSTEM OUTAGE WHICH MAY JEOPARDIZE THE OPERATION OF THE DRAINAGE, SEWER, POWER AND WATER SYSTEM. AS SUCH, THE SWBNO POWER DISPATCHER ON DUTY WILL HAVE FULL AUTHORITY TO DENY ANY NEW OUTAGE REQUESTS OR REQUIRE THE RETURN INTO SERVICE, ANY SWBNO POWER CABLES, WHICH MAY DELAY THE PROGRESS OF THE WORK.

3.15 FEEDER OUTAGES ARE REQUIRED FOR SAFETY OF THE PERSONNEL AND EQUIPMENT IN ANY AREAS WHERE THE NEW CONSTRUCTION COMES WITHIN 10 FEET OF SWBNO UNDERGROUND OR AERIAL MEDIUM VOLTAGE POWER CABLES. CONTRACTOR SHALL FOLLOW ELECTRICAL SYSTEM OUTAGE PROCEDURES PER CONTRACT DOCUMENTS.

3.16 THE CONTRACTOR IS REQUIRED TO INFORM CENTRAL CONTROL BY PHONE (504-865-0575) AND THE ASSIGNED PROJECT PM IMMEDIATELY, IF ANY EXISTING SWBNO CABLES OR OWNER PROPERTY ARE DAMAGED OR ASSUMED DAMAGED IN CONNECTION WITH THIS PROJECT. CONTRACTOR SHALL PAY FOR ALL CABLE AND /OR ELECTRICAL EQUIPMENT REPAIRS RESULTING FROM THE WORK PERFORMED UNDER THIS CONTRACT.

3.17 CONTRACTOR SHALL PROTECT ALL EXISTING STRUCTURES AND PIPING TO REMAIN AGAINST DAMAGE THROUGHOUT CONSTRUCTION. ALL EXISTING IMPROVEMENTS ARE TO REMAIN UNLESS OTHERWISE NOTED.

3.18 CONTRACTOR SHALL NOTIFY OWNER OF ANY DEFECTS AND/OR DAMAGED/DECAYING MATERIALS FOUND IN THE EXISTING STRUCTURES OR WORK PRIOR TO ENCLOSING REQUIRED CONSTRUCTION.

3.19 HEAVY EQUIPMENT SHALL BE MATTED AND SHALL NOT BE OPERATED WITHIN 30' OF ANY STRUCTURE TANK WALLS.

3.20 CONTRACTOR SHALL COORDINATE HIS WORK LEADING UP TO AND DURING SAID CABLE OUTAGES WITH THE BOARD REPRESENTATIVE WHO SHALL BE GIVEN (1) WEEK ADVANCED NOTICE. ANY ELECTRICAL CLEARANCES REQUIRING POWER CABLES AND BREAKER OUTAGES SHALL BE SUBMITTED TO THE FOLLOWING EMAIL: FEEDERREQUEST@SWBNO.ORG FOR REVIEW.

4.0 TRAFFIC CONTROL

4.1 PRIOR TO THE START OF CONSTRUCTION, THE CONTRACTOR SHALL SUBMIT TO THE CITY TRAFFIC ENGINEER FOR REVIEW AND APPROVAL A COMPLETE CONSTRUCTION SIGNAGE, TRAFFIC MAINTENANCE, AND PUBLIC SAFETY PLAN, PER SECTION C129 OF THE GENERAL SPECIFICATIONS, WHICH, AT A MINIMUM, INCLUDE THE FOLLOWING:

A. A PLAN FOR THE PROPOSED ROUTE ON WHICH CONSTRUCTION MATERIALS AND EQUIPMENT ARE TO BE TRANSPORTED TO OR FROM THE CONSTRUCTION SITE.

B. THE NAME AND TELEPHONE NUMBER OF THE RESPONSIBLE PERSON IN CHARGE OF THE PROJECT.

5.0 GENERAL

5.1 CONTRACTOR SHALL DEVELOP AND SUBMIT SITE-SPECIFIC SAFETY AND HEALTH PLAN, TO INCLUDE SAFE WORK PRACTICES FOR REVIEW.

5.2 SITE ACCESS AND LAY DOWN AREAS SHALL BE DIRECTED BY THE OWNER. THE CONTRACTOR SHALL BE RESPONSIBLE FOR SAFETY PRECAUTIONS, MEANS, METHODS, TECHNIQUES, SEQUENCES, PROCEDURES, ETC. REQUIRED FOR PERFORMANCE OF THE WORK.

5.3 THE CONTRACTOR SHALL BE RESPONSIBLE FOR ALL LAYOUT AND SURVEYING REQUIRED FOR THE CONSTRUCTION AS SHOWN ON THE DRAWINGS. DRAWINGS SHALL NOT BE SCALED FOR CONSTRUCTION PURPOSES. PROVIDED RECORD DRAWINGS AND BACKGROUNDS UTILIZED FOR PREPARATION OF THESE PLANS HAVE BEEN SCALED AND ROTATED TO BEST FIT EXISTING SITE CONDITIONS. FIELD VERIFICATION OF ALL STRUCTURES AND DIMENSIONS SHALL BE DONE PRIOR TO FABRICATION OF ANY ASPECT OF THE REQUIRED WORK. ALL ELEVATIONS SHOWN REFER TO N.G.V.D. = NATIONAL GEODETIC VERTICAL DATUM = 0.00 FT. CONTRACTOR SHALL BE RESPONSIBLE TO VERIFY ALL DIMENSIONS AND ELEVATIONS SHOWN ON THE DRAWINGS PRIOR TO FABRICATION. NOTIFY ENGINEER WITH ANY DISCREPANCIES.

5.4 CONTRACTOR SHALL BE RESPONSIBLE FOR ALL TEMPORARY CONSTRUCTION SERVICES, INCLUDING TEMPORARY LIGHTING DURING CONSTRUCTION.

5.5 CONTRACTOR SHALL BE RESPONSIBLE FOR MAINTAINING ALL SERVICES DURING CONSTRUCTION. ANY PRIVATE UTILITY AND OTHER CONCERNED AGENCIES SHALL BE CONTACTED AT LEAST 72 HOURS IN ADVANCE,

5.6 CONTRACTOR SHALL BE RESPONSIBLE TO MAINTAIN TEMPORARY DRAINAGE WITHIN THE PROJECT AREA DURING CONSTRUCTION. CONTRACTOR SHALL NOT IMPEDE EXISTING OR ANY REQUIRED DRAINAGE DURING RAINSTORMS OR WHEN A STORM IS IMMINENT WITHIN THE CONSTRUCTION SITE.

5.7 CONTRACTOR SHALL PROVIDE THE OWNER AND ENGINEER THE NAMES, PHONE NUMBERS, AND EMAIL ADDRESSES OF PERSONNEL WHO ARE AVAILABLE ON A 24 HOUR BASIS FOR REMOVING ANY TEMPORARY IMPEDIMENT TO DRAINAGE OR WATER SERVICES DURING CONSTRUCTION.

5.8 CONTRACTOR SHALL BE RESPONSIBLE FOR HOUSEKEEPING OF THE PROJECT SITE AND ALL ACCESS ROADS ON A DAILY BASIS AND SHALL KEEP THE AREA CLEAN AND FREE OF ALL TRASH AND DEBRIS.

5.9 CONSTRUCTION TRAFFIC CONTROL SIGNS, BARRICADES, WARNING LIGHTS, DEVICES AND METHODS, SHALL COMPLY WITH MANUAL OF UNIFORM TRAFFIC CONTROL DEVICES AND THESE CONTRACT DOCUMENTS, UNLESS OTHERWISE NOTED IN THE FIELD BY THE OWNER.

5.10 NO SIGNS OR SIGNALS SHALL BE REMOVED WITHOUT THE APPROVAL OF THE OWNER. THE CONTRACTOR ACCEPTS ALL RESPONSIBILITY DURING THE TIME OF REMOVAL. THE CONTRACTOR MUST NOTIFY THE OWNER IN WRITING TEN (10) WORKING DAYS PRIOR TO THE REMOVAL OF ANY TRAFFIC CONTROL DEVICES.

5.11 ALL EQUIPMENT OR MATERIALS HAULED TO OR FROM THE CONSTRUCTION SITE WILL BE BY A ROUTE APPROVED OR DESIGNATED BY THE CITY OF NEW ORLEANS, DEPARTMENT OF PUBLIC WORKS TRAFFIC DIVISION PRIOR TO THE START OF CONSTRUCTION.

5.12 THE CONTRACTOR SHALL BE RESPONSIBLE TO DESIGN, PROVIDE, INSTALL AND MAINTAIN SHEETING, SHORING, BRACING, FALSEWORK, ETC REQUIRED TO COMPLETE THE WORK IN A CONTINUOUS SAFE MANNER. THE CONTRACTOR SHALL ASSUME ALL RESPONSIBILITY FOR THE STABILITY AND ADEQUACY OF ALL DESIGNED SYSTEMS CONSTRUCTED AND ALL COSTS AND DAMAGES RESULTING FROM ANY FAILURE THEREOF.

5.13 TRACKED CONSTRUCTION EQUIPMENT WHICH IS NOT ON MATS SHALL NOT BE ALLOWED ON EXISTING STREETS OR PAVED CONSTRUCTION ACCESS AREAS.

5.14 CONTRACTOR SHALL BE RESPONSIBLE TO REPAIR DAMAGES AS A RESULT OF CONSTRUCTION, INCLUDING DEMOLITION ACTIVITIES.

5.15 PRIOR TO STORMS, CONTRACTOR SHALL BE RESPONSIBLE FOR SECURING CONSTRUCTION MATERIALS, EQUIPMENT, AND TEMPORARY STRUCTURES. CONTRACTOR SHALL BE ABLE TO DROP THE BOOM OF ANY CRANE ON SHORT NOTICE IN THE EVENT OF A SEVERE STORM.

6.0 ENVIRONMENTAL PROTECTION

6.1 THE CONTRACTOR SHALL COMPLY WITH FEDERAL, STATE AND LOCAL LAWS AND REGULATIONS CONTROLLING POLLUTION OF THE ENVIRONMENT, INCLUDING AIR, WATER AND NOISE. THE CONTRACTOR SHALL TAKE PRECAUTIONS TO PREVENT POLLUTION OF WATERS WITH FUELS, OILS, ASPHALTS, CHEMICALS OR OTHER HARMFUL MATERIALS AND TO PREVENT POLLUTION OF THE ATMOSPHERE FROM PARTICULATE AND GASEOUS MATTER.

A. THE CONTRACTOR SHALL MAINTAIN AND OPERATE EQUIPMENT TO MINIMIZE NOISE, ENGINES SHALL BE EQUIPPED WITH PROPERLY FUNCTIONING MUFFLERS. THE CONTRACTOR SHALL LIMIT ACTIVITY NEAR NOISE SENSITIVE AREAS, SUCH AS CHURCHES, HOSPITALS AND SCHOOLS, SO NORMAL ACTIVITIES ARE NOT UNDULY DISRUPTED.

B. THE CONTRACTOR SHALL TAKE REASONABLE MEASURES TO PREVENT UNNECESSARY DUST. SURFACES SUBJECT TO DUSTING SHALL BE KEPT MOIST WITH WATER OR BY APPLICATION OF CHEMICAL DUST SUPPRESSANT. DUSTY MATERIALS STORED OR IN TRANSIT SHALL BE COVERED TO PREVENT THE DUST FROM BLOWING.

C. CONTRACTOR SHALL PROTECT SWBNO PROCESS FROM CONTAMINATION BY CONSTRUCTION ACTIVITIES.

D. NO FUELED EQUIPMENT, OR FLUID OF ANY KIND OTHER THAN WATER, IS ALLOWED ON TOP OF C-BASIN ELEVATED CONCRETE WALKWAY.

REV.	DATE	DESCRIPTION	BY
0	03/11/2026	ISSUED FOR BID	LEK

STATE OF LOUISIANA
LAURA EYMAN KELLY
License No. 59645
PROFESSIONAL ENGINEER
IN
MECHANICAL ENGINEERING
3/11/2026

wsp USA Inc.
ONE PENN PLAZA 11TH FLOOR
NEW YORK, NY 10119
CERTIFICATE OF REGISTRATION # EF.0000623

FIRM No LA - EF. 0003109
Infinity Engineering Consultants, LLC
Civil | Structural | Mechanical | Electrical | Marine | Transportation
Metairie, LA www.infinityec.com 504-304-0548

DATE	03/11/2026	JOB NO.	22-017

DESIGNED BY: L. KELLY
FILE NAME: G1.00 GENERAL NOTES.dwg

SEWERAGE AND WATER BOARD OF NEW ORLEANS

CONTRACT No. 1444
WEST POWER COMPLEX @ CWPT
FUEL OIL DELIVERY SYSTEM

GENERAL

GENERAL NOTES

DR:	F. CHERRY
CK:	L. KELLY
AP:	L. KELLY
LAST EDIT:	
SCALE:	AS NOTED
DATE:	03/11/2026

A/E DWG NO.
G1.00

DWG. No. 12196-W-24

SET NO: SHEET NO: 3 OF 72

BID PACKAGE - NOT FOR CONSTRUCTION

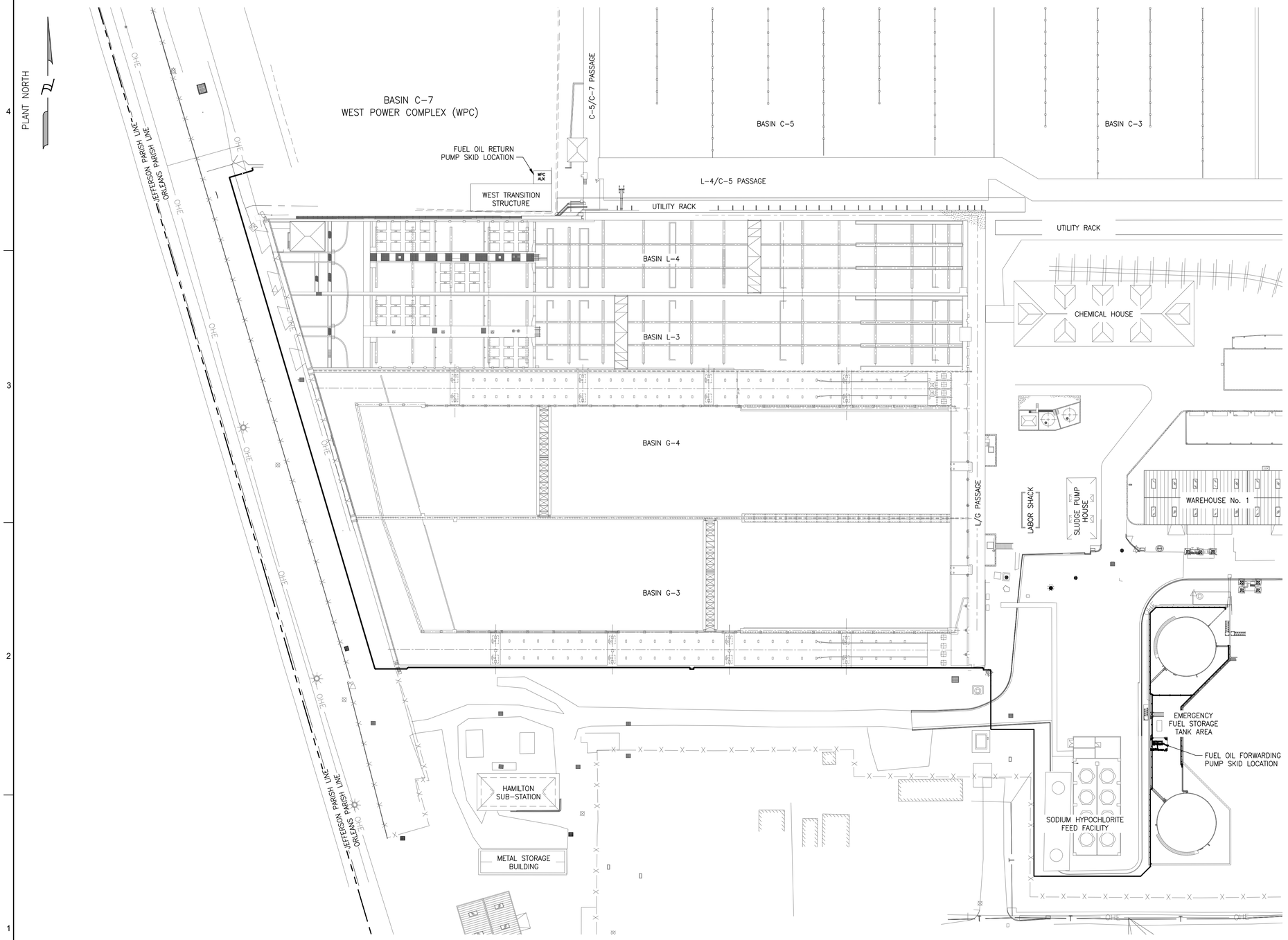

OVERALL SITE PLAN

SCALE: 1" = 50'

0 50' 100'

SCALE: 1" = 50'

REV.	DATE	DESCRIPTION	BY
0	03/11/2026	ISSUED FOR BID	LEK

STATE OF LOUISIANA
LAURA E. KELLY
License No. 39645
PROFESSIONAL ENGINEER
IN
MECHANICAL ENGINEERING
3/11/2026

WSP USA INC.
ONE PENN PLAZA, 4TH FLOOR,
NEW YORK, NY 10119
CERTIFICATE OF REGISTRATION # EF.0000623

FIRM No: LA – EF. 0003109
Infinity Engineering Consultants, LLC
Civil | Structural | Mechanical | Electrical | Marine | Transportation
Metairie, LA www.infinityec.com 504-304-0548

DATE	03/11/2026	JOB NO.	22-017

DESIGNED BY: L. KELLY
FILE NAME: Overall Site Plan.dwg

SEWERAGE AND WATER BOARD
OF NEW ORLEANS

CONTRACT No. 1444

WEST POWER COMPLEX @ CWPT
FUEL OIL DELIVERY SYSTEM

GENERAL

OVERALL SITE PLAN

DR.	F. CHERRY
CK:	L. KELLY
AP:	L. KELLY
LAST EDIT:	
SCALE:	AS NOTED
DATE:	03/11/2026

A/E DWG NO.
G2.00

DWG. No. 12196-W-24

SET NO: SHEET NO: 4 OF 72

BID PACKAGE - NOT FOR CONSTRUCTION

MECHANICAL GENERAL NOTES:

1. FOR UNDERGROUND PIPING SPECIFICATION REFER TO SECTION 153443 UNDERGROUND PIPING. FOR ABOVEGROUND PIPING REFER TO SECTION 405020 ABOVEGROUND POWER PLANT PIPING.
2. PIPE ELEVATIONS AND LOCATIONS SHOWN ON THE CONTRACT DOCUMENTS ARE DESIGN DIMENSIONS AND MAY NOT REFLECT THE ACTUAL FIELD CONDITIONS. BEFORE ANY FABRICATION WORK, CONTRACTOR SHALL FIELD VERIFY ALL DESIGN DIMENSIONS BASED ON ACTUAL FIELD CONDITIONS.
3. CONTRACTOR SHALL BE RESPONSIBLE FOR SURVEYING THE CONSTRUCTION AREA FOR PIPING INTERFERENCES WITH EXISTING PIPING, BUILDING STRUCTURES, AND ANY OTHER POTENTIAL INTERFERENCES PRIOR TO FABRICATION.
4. WHERE INTERFERENCES ARE FOUND IN THE FIELD, THE ISSUE SHALL BE RESOLVED WITH THE OWNER OR OWNER'S REPRESENTATIVE BEFORE PROCEEDING.
5. CONTRACTOR SHALL PROVIDE DRAIN CONNECTIONS AT ALL LOW POINTS IN ABOVEGROUND PIPING.
6. CONTRACTOR SHALL PROVIDE VENT CONNECTIONS AT ALL HIGH POINTS IN THE PIPING SYSTEMS WHETHER SHOWN ON CONTRACT DRAWINGS OR NOT.
7. ALL VENTS AND DRAINS SHALL BE EASILY ACCESSIBLE FROM PLATFORMS OR GRADE.
8. PRESSURE RATING AND MATERIAL OF VENT/DRAIN CONNECTION SHALL BE PER APPLICABLE PIPE SPECIFICATION.
9. WELDING SHALL CONFORM TO SECTION 485868 WELDING OF POWER PLANT PIPING.
10. CONTRACTOR SHALL ELECTRICALLY ISOLATE DESIGNATED PIPING FROM CONNECTING PIPING AND EQUIPMENT, STEEL, GROUNDING SYSTEM, AND OTHER BURIED PIPING SYSTEMS.
11. PIPING COMPONENTS AND FITTINGS ARE SHOWN FOR CONTRACTOR REFERENCE. CONTRACTOR SHALL BE RESPONSIBLE FOR ALL PIPING, COMPONENTS, AND ACCESSORIES TO COMPLETE NEW PIPING SYSTEMS AS NOTED IN SPECIFICATIONS, DRAWINGS, AND PIPING MATERIAL SPECIFICATION.
12. ALL PIPE SUPPORTS SHALL BE HOT DIPPED GALVANIZED AFTER FABRICATION UNLESS NOTED OTHERWISE.
13. CATHODIC PROTECTION SHALL BE APPLIED TO METAL PIPING AND FITTINGS UNDERGROUND, INCLUDING THE DOUBLE CONTAINMENT PIPING. CATHODIC PROTECTION SHOULD BE DESIGNED ACCORDING TO SECTION 485090 CATHODIC PROTECTION.

ABBREVIATIONS	
CODE	DESCRIPTION
AG	ABOVE GROUND
AUTO	AUTOMATIC
AUX	AUXILIARY
CN	CONTRACT NUMBER
EOP	END OF PIPE
ELEV	ELEVATION
HY	HYDRANT
IP	INSPECTION PORT
MJ	MECHANICAL JOINT
FO	FUEL OIL
RS	REMOVABLE SPOOL
TB	THRUST BEARING
TP	TIE–IN POINT
UG	UNDERGROUND

PLAN LAYOUT SYMBOLS AND CALLOUTS

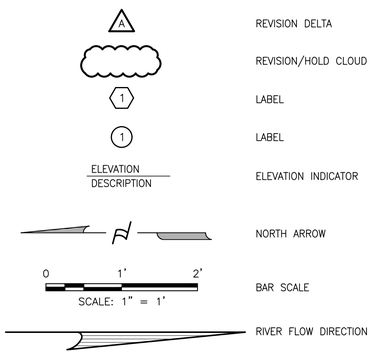

REVISION DELTA
REVISION/HOLD CLOUD
LABEL
LABEL
ELEVATION INDICATOR
NORTH ARROW
BAR SCALE
RIVER FLOW DIRECTION

PIPE & FITTING LEGEND

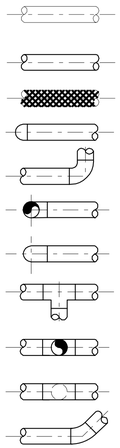

EXISTING PIPE
NEW PIPE
PIPE TO BE REMOVED
CAP
ELBOW, 90 DEGREE
ELBOW UP
ELBOW DOWN
TEE
TEE UP
TEE DOWN
ELBOW, 45 DEGREE

DETAIL, SECTION & ELEVATION CALLOUTS

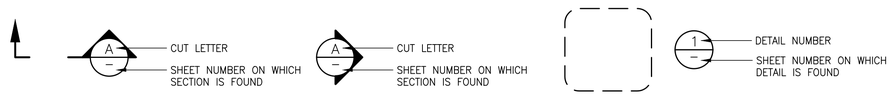

SUBTITLE

VIEW TITLE

SCALE: NTS

SUBTITLE

SECTION/ELEVATION

SCALE: NTS

A — CUT LETTER
G2 — SHEET NUMBER FROM WHICH SECTION IS CUT

DETAIL

SCALE: NTS

1 — DETAIL NUMBER
G2 — SHEET NUMBER FROM WHICH DETAIL IS FOUND

REV.	DATE	DESCRIPTION	BY
0	03/11/2026	ISSUED FOR BID	LEK

STATE OF LOUISIANA
LAURA LYMAN KELLY
License No. 39645
PROFESSIONAL ENGINEER
IN
MECHANICAL ENGINEERING
3/11/2026

WSP USA Inc.
ONE PENN PLAZA, 4TH FLOOR,
NEW YORK, NY 10119
CERTIFICATE OF AUTHORIZATION # EF.0000623

FIRM No: LA – EF. 0003709
Infinity Engineering Consultants, LLC
Civil | Structural | Mechanical | Electrical | Marine | Transportation
Metairie, LA | www.infinityec.com | 504-304-0548

DATE	03/11/2026	JOB NO.	22-017

DESIGNED BY: L. KELLY
FILE NAME: M1.00 MECHANICAL NOTES & LEGEND.dwg

SEWERAGE AND WATER BOARD OF NEW ORLEANS

CONTRACT No. 1444

WEST POWER COMPLEX @ CWPT
FUEL OIL DELIVERY SYSTEM

MECHANICAL

MECHANICAL NOTES & LEGEND

DR:	R. SCHOUEST
CK:	L. WEST
AP:	L. KELLY
LAST EDIT:	
SCALE:	AS NOTED
DATE:	03/11/2026

A/E DWG NO.
M1.00

DWG. No. 12196-W-24

SET NO: SHEET NO: 5 OF 72

BID PACKAGE - NOT FOR CONSTRUCTION

UNIT IDENTIFIERS

UNIT CODE	DESCRIPTION
0	COMMON
1	UNIT 1
2	UNIT 2
3	UNIT 3
4	UNIT 4
5	UNIT 5
6	UNIT 6

PROCESS PIPING

- MAIN PROCESS FLOW PIPING
- SECONDARY PROCESS FLOW PIPING
- VENDOR PIPING
- EXISTING PROCESS FLOW PIPING
- FUTURE PROCESS FLOW PIPING
- FLOW DIRECTION
- LINE SLOPE (TYP) — SLOPE
- LINE SLOPE (ALT) — SLOPE

PIPING VALVES

- BALL VALVE
- BUTTERFLY VALVE
- CHECK VALVE
- DIAPHRAGM VALVE
- GATE VALVE
- GLOBE VALVE
- NEEDLE VALVE
- PLUG VALVE
- POST INDICATOR VALVE
- STOP CHECK VALVE
- ANGLE VALVE
- ANGLE BLOWDOWN VALVE
- THREE WAY VALVE
- THREE WAY BALL VALVE

MISCELLANEOUS

- CONCENTRIC REDUCER
- ECCENTRIC REDUCER FOT
- ECCENTRIC REDUCER FOB
- WELD CAP
- THREADED/SCREWED
- CLEAN OUT
- OPEN DRAIN
- GOOSE NECK VENT
- HOSE CONNECTION
- BLIND FLANGE
- INSULATING FLANGE — IF
- DIELECTRIC UNION — DU
- MECHANICAL JOINT CAP

PIPING SPECIALTY

- FLAME ARRESTOR
- EXPANSION JOINT
- MECHANICAL COUPLING
- REMOVABLE SPOOL — RS
- FLEXIBLE HOSE
- STEAM TRAP — ST
- DRAIN TRAP — DT
- EXHAUST HEAD
- FILTER
- BACK PRESSURE DIFFUSER — BPD
- DIAPHRAGM SEAL
- AIR RELEASE VALVE — AV
- STATIC MIXER
- VENT SILENCER
- IN-LINE SILENCER
- RESTRICTION ORIFICE
- DUPLEX STRAINER
- T-TYPE STRAINER
- Y-TYPE STRAINER
- CONE STRAINER
- SINGLE BASKET STRAINER
- TEMPORARY STRAINER — TS
- FREE VENT W/SCREEN
- FLEXIBLE BALL JOINT
- OPEN SPECTACLE BLIND
- CLOSED SPECTACLE BLIND
- BACKFLOW PREVENTER

FIRE PROTECTION & SAFETY

- FIRE HYDRANT
- THREE WAY FIRE HYDRANT
- FIRE HYDRANT W/MONITOR
- STAND PIPE
- FIRE MONITOR
- FOAM MONITOR
- FIRE MONITOR ELEVATED
- FOAM MONITOR ELEVATED
- FIRE MONITOR REMOTE OPERATED
- FOAM MONITOR REMOTE OPERATED
- PRE-ACTION SPRINKLER
- DELUGE SPRAY
- WET SPRINKLER
- HOSE HOUSE — HH
- HOSE REEL
- HOSE RACK STATION
- EYE WASH
- SAFETY SHOWER
- SAFETY SHOWER AND EYE WASH

SYSTEM IDENTIFIERS

CODE	SYSTEM NAME	CODE	SYSTEM NAME
	POTABLE WATERS		STEAM AND CONDENSATE
PW	POTABLE WATER (ALSO FIREWATER)	ASS	AUXILIARY STEAM
	PROCESS WATERS	BDS	BOILER BLOWDOWN
ACW	AUXILIARY COOLING WATER	BFW	BOILER FEEDWATER
CCW	COMPONENT COOLING WATER	BSS	BOILER SAMPLING
CWS	CIRCULATING WATER	CDS	CONDENSATE & CONDENSATE RETURN
PRW	PROCESS WATER	DWS	DEMINERALIZED WATER
RWS	RAW WATER	ROP	RO PERMEATE
	MISC. AND HVAC WATERS	EXS	STEAM TURBINE EXTRACTION
CHW	CHILLED WATER	STX	STEAM TURBINE EXHAUST
SWS	SERVICE WATER	GSS	GLAND SEAL – TURBINE
UWS	UTILITY WATER	HPS	HIGH PRESSURE STEAM (MAIN STEAM)
	DRAIN/WASTE/VENT	LPS	LOW PRESSURE STEAM
DRS	DRAIN	SDN	STEAM DRAINS
EDS	EQUIPMENT DRAINS		PROCESS FLUIDS, OILS AND FUELS
MDS	MISCELLANEOUS DRAINS	FG	FUEL GAS
OD	OILY DRAINS	FO	FUEL OIL
SW	SANITARY WASTE	HYS	HYDRAULIC SUPPLY
ROR	WASTE-RO REJECT	LOS	LUBE OIL
WW	WASTE WATER	PDR	PROCESS DRAINS
	COMPRESSED AIR AND GAS	COS	CONTROL OIL
AEX	AIR EVACUATION		CHEMICALS, REAGENTS & POLYMERS
CAS	COMPRESSED AIR	CHX	CHEMICAL (REPLACE X WITH NUMBER)
CO2	CARBON DIOXIDE GAS		FIRE PROTECTION
IAS	INSTRUMENT AIR	FPS	FIRE PROTECTION
N2G	NITROGEN, GAS		
SAS	SERVICE AIR		
	VENDOR AND MISC. SYSTEMS		
GTS	GAS TURBINE/PACKAGE		
TWS	TURBINE WASH WATER		
STS	STEAM TURBINE/PACKAGE		

PIPING MATERIAL DESIGNATIONS

SEE UNDERGROUND PIPING SPECIFICATION 15.34.42 FOR YHD AND PIPE SPECIFICATION TABLES 40.50.20 FOR HC01.

DESIGNATION	DESCRIPTION
HC01	A106 GR B CARBON STEEL, CL150
YHD	DOUBLE WALL PIPE, A106 GR B CARBON STEEL, CL150

INSULATION CODES

N	NOT INSULATED
P	PERSONNEL PROTECTION
E	FREEZE PROTECTION W/ ELECTRIC TRACE
F	FREEZE PROTECTION
W	CONDENSATION CONTROL
H	HIGH TEMP INSULATION
M	MEDIUM TEMP INSULATION
T	THERMAL INS. W/ HEAT TRACE

PIPING VALVE POSITION

- NORMALLY OPEN
- NC — NORMALLY CLOSED
- LO — LOCKED OPEN
- LC — LOCKED CLOSED

RELIEF DEVICES

- PRESS RELIEF RUPTURE DISC
- PRESS RELIEF DEVICE
- VACUUM RELIEF RUPTURE DISC
- VACUUM RELIEF DEVICE

VALVE OPERATORS

- HAND WHEEL OR LEVER
- M — MOTOR OPERATOR
- DIAPHRAGM OPERATOR
- P — PISTON OPERATOR
- E/H — ELECTRO-HYDRAULIC

DESIGN BREAKS

- AHK | AHA — PIPING MATERIAL
- UNIT 1 | UNIT 2 — SYSTEM IDENTIFIER, UNIT, OR CODE
- IBL | IBH / AHK | AGF — SYSTEM CODE BREAK W/ PIPING MATERIAL CHANGE
- N1 — EQUIPMENT CONNECTION
- TP / XXX — TIE POINT
- BY VENDOR

EQUIPMENT IDENTIFIERS

CODE	DESCRIPTION
ACC	ACCUMULATOR
AGT	AGITATOR
ATM	ATTEMPERATOR
BLO	BLOWER
BLR	BOILER
BTL	BOTTLE, PRESSURIZED GAS
CDA	CONDENSER, AIR COOLED
CLF	CLARIFIER
CLR	COOLER
CMP	COMPRESSOR
CND	CONDENSER
CTW	COOLING TOWER
DEA	DEAERATOR
DGU	GENERATOR, DIESEL
DMP	DAMPER
DRV	ELECTRIC MOTOR
DRY	DRYER
EJR	EJECTOR
EXP	EXPANDER
FAN	FAN
FLT	FILTER
GEN	GENERATOR
HEX	HEAT EXCHANGER
HRU	HEAT RECOVERY SYSTEM
HTR	HEATER
MIX	MIXER
MSP	MOISTURE SEPARATOR
MTR	MOTOR
PMP	PUMP
PND	POND
ROU	REVERSE OSMOSIS UNIT
SCN	SCREEN
SCR	SELECTIVE CATALYTIC REDUCTION UNIT
SIL	SILENCER
SMP	SUMP
STK	STACK
TNK	TANK
TOT	CHEMICAL TOTE
TRB	TURBINE
VPR	VAPORIZER
VSL	VESSEL
WEL	WELL
ZXX	SKID SYSTEM

SPECIALTY IDENTIFIERS

CODE	DESCRIPTION
AT	ATTEMPERATOR
AV	AIR RELEASE VALVE
BL	BLINDS
CN	CONNECTION
CO	CLEANOUTS
DR	DRAIN
EJ	EXPANSION JOINT
FA	FLAME ARRESTOR
FC	FIRE CONNECTION
FM	FIRE MONITOR
FS	FLOW SIGHT GLASS
FU	FILTER UNIT
HH	HOSE HOUSE
HU	HOSE UNIT
HY	HYDRANT
RO	RESTRICTION ORIFICE
RV	RELIEF VALVE
SD	SUCTION DIFFUSER
SE	SEPARATOR
SL	SILENCER
SM	MIXER
SN	SCREEN
SP	PIPING
SS	SAFETY SHOWER
SU	STRAINER UNIT
TP	STEAM TRAP

ABBREVIATIONS

CODE	DESCRIPTION
AG	ABOVE GROUND
AUTO	AUTOMATIC
AUX	AUXILIARY
CN	CONTRACT NUMBER
DCS	DISTRIBUTED CONTROL SYSTEM
FD	FLOOR DRAIN
GTG	GAS TURBINE GENERATOR
HW	HARDWIRED
IP	INSPECTION PORT
MAN	MANUAL
RNG	RUNNING
RS	REMOVABLE SPOOL
RUN	RUN COMMAND
STRT/STP	START / STOP COMMAND
TB	THRUST BEARING
TBL	TROUBLE
UG	UNDER GROUND

PIPING DESIGNATION

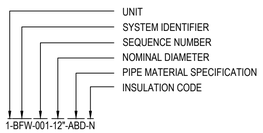

EQUIPMENT TAGGING

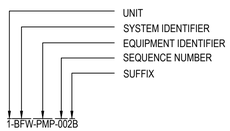

MANUAL VALVE TAGGING

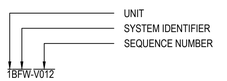

PIPING SPECIALTY TAGGING

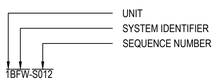

OFF SHEET & UNIT CONNECTORS

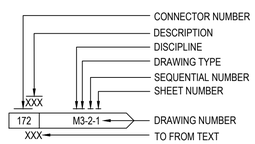

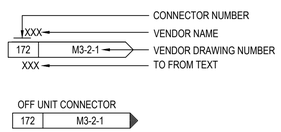

REV.	DATE	DESCRIPTION	BY
0	03/11/26	ISSUED FOR BID	MS

STATE OF LOUISIANA — SARAH AMANDA STALLINGS — License No. 46647 — PROFESSIONAL ENGINEER

ENGINEER: MANDY STALLINGS
LICENSE #: PE # 0046647

WSP USA INC.
ONE PENN PLAZA, 11TH FLOOR
NEW YORK, NY 10119
CERTIFICATE OF REGISTRATION # EF 0000623

DATE	12/17/25	JOB NO.	174602

DESIGNED BY: M. STALLINGS
FILE NAME: M3-0-1.dwg

SEWERAGE AND WATER BOARD OF NEW ORLEANS

CONTRACT No. 1444

WEST POWER COMPLEX @ CWTP
FUEL OIL DELIVERY SYSTEM

MECHANICAL

PIPING AND INSTRUMENTATION DIAGRAM LEGEND

DR.	M. STALLINGS
CK:	T. KUTLOWSKI
AP:	M. STALLINGS
LAST EDIT:	
SCALE:	NTS
DATE:	12/17/25

A/E DWG NO. M3-0-1

DWG. No. 12196-W-24

SET NO: SHEET NO: 6 OF 72

3/11/2026 1:40:56 PM

BID PACKAGE - NOT FOR CONSTRUCTION

INSTRUMENTATION LETTERING IDENTIFICATION TABLE

	FIRST LETTER		SUCCEEDING LETTERS		
	MEASURED OR INITIATED VARIABLE	MODIFIER	READOUT / PASSIVE FUNCTION	OUTPUT FUNCTION	MODIFIER
A	ANALYSIS		ALARM		AUTO
B	BURNER OR COMBUSTION		USER'S CHOICE	USER'S CHOICE	USER'S CHOICE
C	CONDUCTIVITY (ELEC)			CONTROL	CLOSE
D	DENSITY (MASS) OR SPECIFIC GRAVITY	DIFFERENTIAL			
E	VOLTAGE (EMF)		PRIMARY ELEMENT		ENABLE
F	FLOW RATE	RATIO (FRACTION)			FAULT OR TROUBLE
G	GAGING (DIMENSIONAL)		GLASS		
H	HAND (MANUALLY INITIATED)				HIGH
I	CURRENT (ELECTRICAL)		INDICATE		
J	POWER	SCAN			
K	TIME OR TIME SCHEDULE	TIME RATE OF CHANGE			
L	LEVEL		LIGHT (PILOT)		LOW
M	MOISTURE OR HUMIDITY	MOMENTARY			MIDDLE OR INTERMEDIATE
N	USER'S CHOICE		USER'S CHOICE	USER'S CHOICE	USER'S CHOICE
O	USER'S CHOICE		ORIFICE (RESTRICTION)		OPEN
P	PRESSURE OR VACUUM		POINT (TEST CONNECTION)		
Q	QUANTITY OR EVENT	INTEGRATE OR TOTALIZE			
R	RADIATION RESTRICTION		RECORD OR PRINT		RUN
S	SPEED OR FREQUENCY	SAFETY		SWITCH	START
T	TEMPERATURE			TRANSMIT	TRIP / STOP
U	MULTI VARIABLE		MULTIFUNCTION	MULTIFUNCTION	MULTIFUNCTION
V	VIBRATION			VALVE	
W	WEIGHT OR FORCE		WELL		
X	UNCLASSIFIED	X AXIS	UNCLASSIFIED	UNCLASSIFIED	UNCLASSIFIED
Y	EVENT, STATE, OR PRESENCE	Y AXIS		RELAY, COMPUTE, CONVERT	
Z	POSITION	Z AXIS		DRIVE, ACTUATOR OR UNCLASSIFIED FINAL CONTROL ELEMENT	

INSTRUMENT AND RELIEF DEVICE TAGGING

SHOWN ON DRAWING

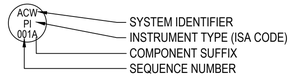

NOTE:
ALL SYSTEM IDENTIFIERS SHOWN ON P&IDS HAVE A UNIT IDENTIFIER PREFIX. THIS IS NOT SHOWN ON INSTRUMENT BUBBLES FOR CLARITY

UNIT IDENTIFIERS WILL BE THE SAME AS THE ASSOCIATED LINE OR EQUIPMENT UNIT IDENTIFIERS AS SHOWN ON P&IDS.

SIGNAL LINES

- CONNECT TO PROCESS
- PNEUMATIC SIGNAL
- ELECTRICAL SIGNAL
- CAPILLARY TUBING (FILLED SYSTEM)
- HYDRAULIC SIGNAL
- ELECTROMAGNETIC / SONIC SIGNAL (WITHOUT WIRING OR TUBING)
- MECHANICAL LINK SIGNAL
- DCS SOFTWARE OR DATA LINK

GENERAL INSTRUMENTS

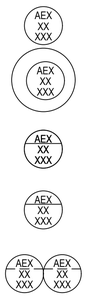

- LOCALLY MOUNTED INSTRUMENT SINGLE VARIABLE ANY NUMBER OF FUNCTIONS
- HEAT TRACED INSTRUMENTS ARE INDICATED WITH A DASHED LINE AROUND INSTRUMENT
- BOARD MOUNTED (FRONT) N - BOARD IDENTIFICATION (OPTIONAL) P - INSTRUMENT REQUIR3ES 120VAC INSTRUMENT POWER
- MOUNTED BEHIND DOOR OR BACK OF PANEL
- TWO MEASURED VARIABLE OR OPTIONALLY TWO FUNCTIONS (ADDITIONAL TANGENT BALLOONS MAY BE ADDED AS REQUIRED)

THERMOCOUPLES / THERMOWELLS

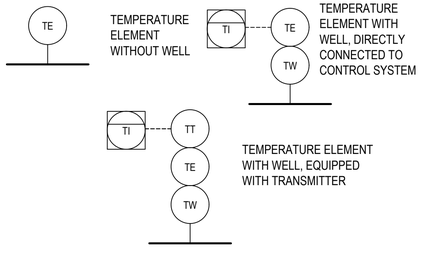

- TEMPERATURE ELEMENT WITHOUT WELL
- TEMPERATURE ELEMENT WITH WELL, DIRECTLY CONNECTED TO CONTROL SYSTEM
- TEMPERATURE ELEMENT WITH WELL, EQUIPPED WITH TRANSMITTER

ALL THERMOWELLS ARE 1" SW, UNLESS OTHERWISE NOTE

ANALYSIS

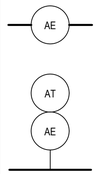

- FLOW THROUGH TYPE
- * THE ANALYZED PROPERTY NAME WILL BE PLACED OUTSIDE THE INSTRUMENT CIRCLE TO IDENTIFY THE SPECIFIC ANALYSIS

POSITION

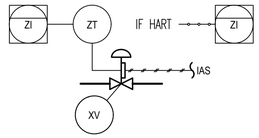

TYPICAL MODULATING CONTROL VALVE WITH POSITION TRANSMITTER

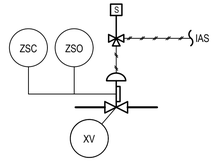

TYPICAL ON/OFF CONTROL VALVE WITH POSITION SWITCHES

LEVEL

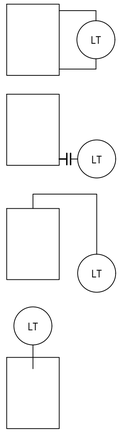

- LEVEL INDICATOR MAGNETIC WINDOW OR FLOAT OR DISPLACEMENT TYPE
- LEVEL TRANSMITTER WITH TWO CONNECTIONS
- LEVEL TRANSMITTER WITH TWO CONNECTIONS
- LEVEL TRANSMITTER WITH TWO CONNECTIONS
- LEVEL TRANSMITTER ULTRASONIC, RADAR OR CAPACITANCE

CONTROL VALVE FAILURE MODES



ATC - AIR TO CLOSE
ATO - AIR TO OPEN
FC - FAIL CLOSE
FO - FAIL OPEN
FF - FAIL FIXED
- (POSITION DOES NOT CHANGE)

SENSORS - FLOW

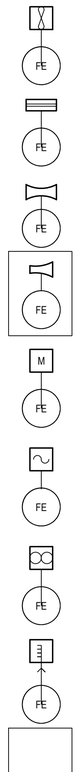

- IN-LINE TURBINE OR PROPELLER FLOW INSTRUMENT
- STRAIGHTENING VANE
- VENTURI
- FLOW NOZZLE
- IN-LINE MAGNETIC FLOW INSTRUMENT
- IN-LINE ULTRASONIC FLOW INSTRUMENT
- POSITIVE DISPLACEMENT FLOW INSTRUMENT
- IN-LINE AVERAGING PITOT TUBE
- IN-LINE EXTRACTABLE AVERAGING PITOT TUBE
- VORTEX FLOW INSTRUMENT
- ORIFICE PLATE WITH FLANGES
- IN-LINE FLOW INDICATION (SIGHT GLASS)
- MASS FLOW (CORIOLIS, THERMAL, ETC.)

PRESSURE

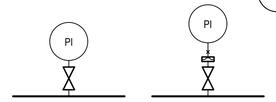

- PRESSURE INDICATOR DIRECTLY CONNECTED
- PRESSURE INDICATOR CONNECTED TO DIAPHRAGM SEAL WITH FILLED SYSTEM

ALL PRESSURE SENSING ELEMENTS ON FRP PIPE WILL BE 1" FLANGED CONNECTIONS. OTHER PIPE MATERIALS WILL INCLUDE 3/4" SW UNLESS OTHERWISE NOTED.

CONTROL VALVE ACTUATORS

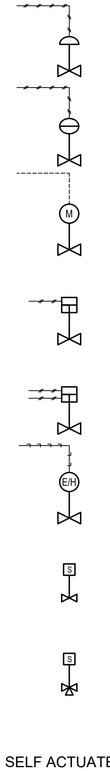

- PNEUMATIC DIAPHRAGM
- DIAPHRAGM PRESSURE BALANCED
- ROTARY MOTOR SHOWN TYPICALLY WITH ELECTRICAL SIGNAL
- PNEUMATIC CYLINDER SINGLE - ACTION
- PNEUMATIC CYLINDER DUAL - ACTION
- ELECTRO - HYDRAULIC
- TWO WAY SOLENOID
- THREE WAY SOLENOID

SELF ACTUATED PRESSURE DEVICES

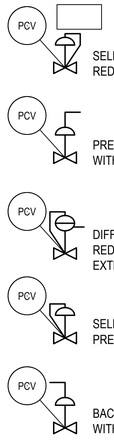

- SELF CONTAINED PRESSURE REDUCING REGULATOR
- PRESSURE REDUCED REGULATOR WITH EXTERNAL TAP
- DIFFERENTIAL PRESSURE REDUCING REGULATOR WITH EXTERNAL AND INTERNAL TAPS
- SELF CONTAINED BACK PRESSURE REGULATOR
- BACK PRESSURE REGULATOR WITH EXTERNAL TAP

SPECIALTY CONTROL VALVES



STEAM CONDITIONING VALVE

CONTROL AND COMPUTER SYSTEM SYMBOLS

CONTROL SHARED DISPLAY SYMBOLS

NORMALLY ACCESSIBLE TO OPERATOR

INDICATOR/CONTROLLER/RECORDER OR ALARM POINTS (TYPICALLY VIDEO DISPLAY)

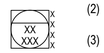

(1) SHARED DISPLAY
(2) SHARED DISPLAY AND
(3) ACCESS LIMITED TO COMMUNICATION LINK
(4) OPERATOR INTERFACE ON COMMUNICATION LINK

AUXILIARY OPERATOR INTERFACE DEVICE



(1) PANEL MOUNTED NORMALLY HAVING AN ANALOG FACEPLATE - NOT NORMALLY MOUNTED ON MAIN OPERATOR CONSOLE
(2) CAN BE A BACK-UP CONTROLLER OR MANUAL STATION
(3) ACCESS MAY BE LIMITED TO COMMUNICATION LINK
(4) OPERATOR INTERFACE VIA THE COMMUNICATION LINK

NOT NORMALLY ACCESSIBLE TO OPERATOR



(1) SHARED BLIND CONTROLLER
(2) SHARED DISPLAY INSTALLED IN FIELD
(3) COMPUTATION SIGNAL CONDITIONING IN SHARED CONTROLLER
(4) MAY BE ON COMMUNICATIONS LINK
(5) NORMALLY BLIND OPERATION
(6) MAY BE ALTERED BY CONFIGURATION

COMPUTER SYMBOLS

THE FUNCTION DESIGNATIONS ASSOCIATED WITH CONTROLLERS, COMPUTING DEVICES, AND CONVERTERS MAY BE USED ON THEIR OWN OR IN COMBINATION WITH CONTROL AND COMPUTER SYMBOLS.



ALM	ALARM	f(x)	NONLINEAR OR UNSPECIFIED FUNCTION
Σ/n	AVERAGING	1-0	ON-OFF
x^n	EXPONENTIAL	+	PLUS BIAS
dist	DERIVATIVE	±	PLUS / MINUS BIAS
△	DIFFERENCE	K	PROPORTIONAL
DIR	DIRECT ACTING	REV	REVERSE ACTING
÷	DIVIDING	√	ROOT EXTRACTION
>	HIGH LIMITING	Σ	SUMMING
>	HIGH SELECTING	f(t)	TIME FUNCTION
∫	INTEGRAL	2oo3	TWO OUT OF THREE
-K	INVERSE PROPORTIONAL	⏚	VELOCITY LIMITER
LEAD LAG	LEAD/LAG		
<	LOW LIMITING		
<	LOW SELECTING		
<>	MEDIUM SELECT		
−	MINUS BIAS		
X	MULTIPLYING		

LOGIC AND SEQUENTIAL CONTROL SYMBOLS

NOT NORMALLY ACCESSIBLE TO OPERATOR

INTERLOCK FUNCTION MAY BE HARD WIRED (HW) OR SOFT WIRED CONTROL SYSTEM BASED, (DCS, PLC, PCS, ECT)



X-INDICATES THE TYPE OF INTERLOCK (DCS, HW, ETC)

Y-UNIQUE LETTER IDENTIFICATION FOR INTERLOCKS THAT ARE USED TO TRIP MULTIPLE DEVICES

Z-SYSTEM IDENTIFIER. INDICATES THE SYSTEM THAT INITIATED THE INTERLOCK

SOFTWARE ALARM

SOFTWARE ALARMS MAY BE IDENTIFIED BY PLACING LETTER DESIGNATORS ON THE INPUT OR THE OUTPUT SIGNAL LINES

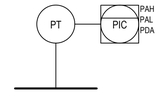

OFF LINE INSTRUMENTS

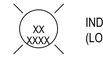

INDICATING LIGHT (LOCAL MOUNT)

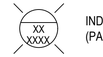

INDICATING LIGHT (PANEL MOUNT)

COMPUTER SYMBOLS

NORMALLY ACCESSIBLE TO OPERATOR

INDICATOR/CONTROLLER/RECORDER OR ALARM POINTS (TYPICALLY VIDEO DISPLAY)



NOT NORMALLY ACCESSIBLE TO OPERATOR



(1) INPUT / OUTPUT INTERFACE
(2) COMPUTATION / SIGNAL CONDITIONING WITH A COMPUTER
(3) MAY BE USED AS A BLIND CONTROLLER OR A SOFTWARE CALCULATION MODULE

NOT NORMALLY ACCESSIBLE TO OPERATOR



(1) PANEL MOUNTED - NORMALLY HAVING AN ANALOG FACEPLATE - NOT NORMALLY MOUNTED ON MAIN OPERATOR CONSOLE

REV.	DATE	DESCRIPTION	BY
0	03/11/26	ISSUED FOR BID	MS

WSP USA INC.
ONE PENNSYLVANIA PLAZA, 55TH FLOOR
NEW YORK, NY 10119
CERTIFICATE OF REGISTRATION # EF.0009023

DATE	12/17/25	JOB NO.	174602

DESIGNED BY: M. STALLINGS
FILE NAME: M3-0-2.dwg

STATE OF LOUISIANA
SARAH AMANDA STALLINGS
License No. 46647
PROFESSIONAL ENGINEER

ENGINEER: MANDY STALLINGS
LICENSE #: PE # 0046647

SEWERAGE AND WATER BOARD OF NEW ORLEANS

CONTRACT No. 1444
WEST POWER COMPLEX @ CWTP
FUEL OIL DELIVERY SYSTEM

MECHANICAL

PIPING AND INSTRUMENTATION DIAGRAM LEGEND

DR:	M. STALLINGS
CK:	T. KUTLOWSKI
AP:	M. STALLINGS
LAST EDIT:	
SCALE:	NTS
DATE:	12/17/25

A/E DWG NO.: M3-0-2

DWG. No. 12196-W-24

SET NO: SHEET NO: 7 OF 72

BID PACKAGE - NOT FOR CONSTRUCTION

3/11/2026 1:42:10 PM

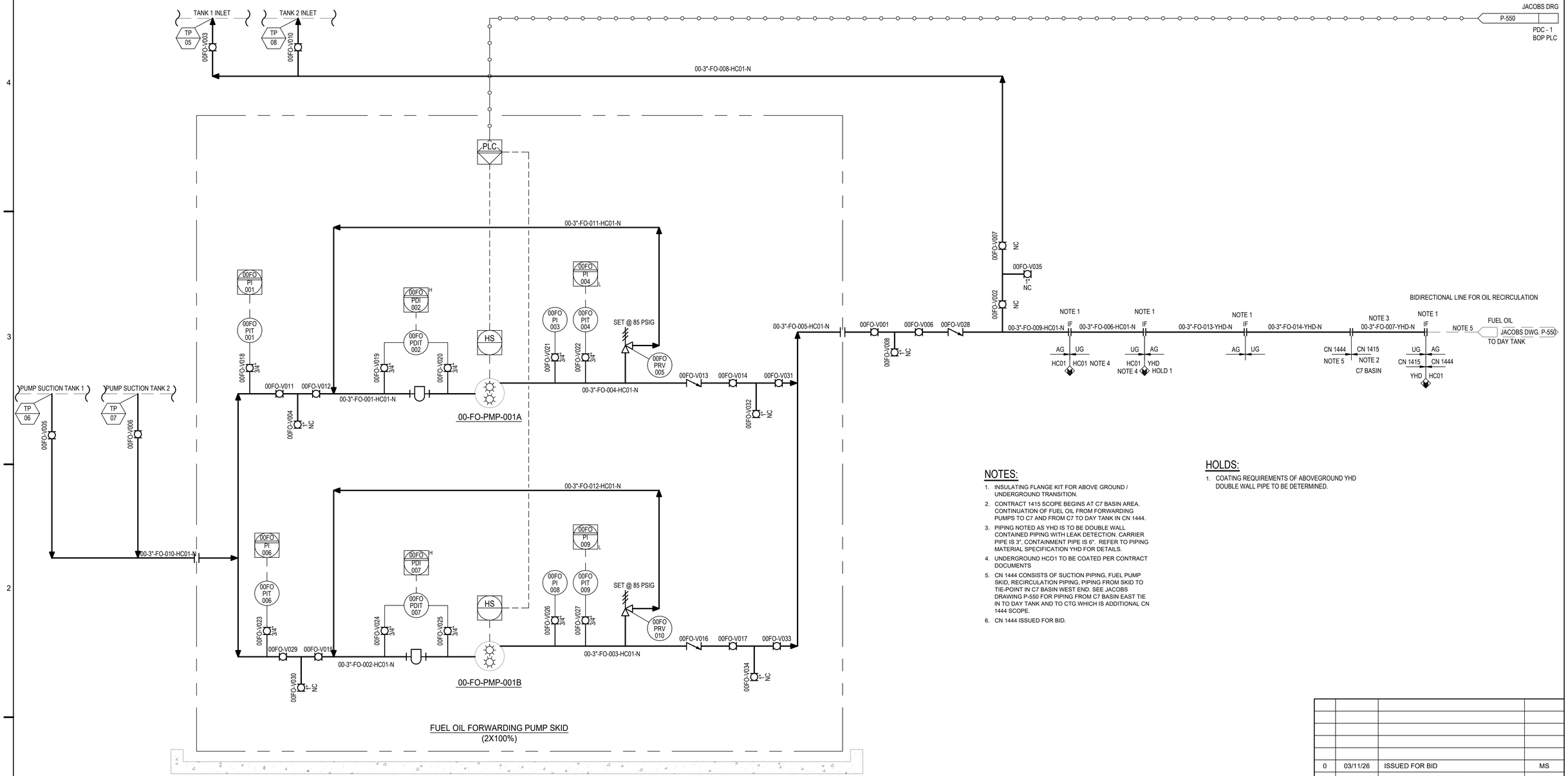

NOTES:

1. INSULATING FLANGE KIT FOR ABOVE GROUND / UNDERGROUND TRANSITION.
2. CONTRACT 1415 SCOPE BEGINS AT C7 BASIN AREA. CONTINUATION OF FUEL OIL FROM FORWARDING PUMPS TO C7 AND FROM C7 TO DAY TANK IN CN 1444.
3. PIPING NOTED AS YHD IS TO BE DOUBLE WALL CONTAINED PIPING WITH LEAK DETECTION. CARRIER PIPE IS 3", CONTAINMENT PIPE IS 6". REFER TO PIPING MATERIAL SPECIFICATION YHD FOR DETAILS.
4. UNDERGROUND HCO1 TO BE COATED PER CONTRACT DOCUMENTS
5. CN 1444 CONSISTS OF SUCTION PIPING, FUEL PUMP SKID, RECIRCULATION PIPING, PIPING FROM SKID TO TIE-POINT IN C7 BASIN WEST END. SEE JACOBS DRAWING P-550 FOR PIPING FROM C7 BASIN EAST TIE IN TO DAY TANK AND TO CTG WHICH IS ADDITIONAL CN 1444 SCOPE.
6. CN 1444 ISSUED FOR BID.

HOLDS:

1. COATING REQUIREMENTS OF ABOVEGROUND YHD DOUBLE WALL PIPE TO BE DETERMINED.

REV.	DATE	DESCRIPTION	BY
0	03/11/26	ISSUED FOR BID	MS

SEWERAGE AND WATER BOARD OF NEW ORLEANS

CONTRACT No. 1444

WEST POWER COMPLEX @ CWTP
FUEL OIL DELIVERY SYSTEM

MECHANICAL

PIPING AND INSTRUMENTATION DIAGRAM FUEL OIL

STATE OF LOUISIANA
SARAH AMANDA STALLINGS
License No. 46647
PROFESSIONAL ENGINEER

ENGINEER: MANDY STALLINGS
LICENSE #: PE # 0046647

WSP USA INC.
ONE PENNSYLVANIA PLAZA, 55TH FLOOR
NEW YORK, NY 10119
CERTIFICATE OF REGISTRATION # EF.0009023

DATE	12/04/2025	JOB NO.	174602

DESIGNED BY: M. STALLINGS
FILE NAME: M3-2.dwg

DR.	M. STALLINGS
CK:	T. KUTLOWSKI
AP:	M. STALLINGS
LAST EDIT:	
SCALE:	NTS
DATE:	12/04/2025

A/E DWG NO.
M3-2

DWG. No. 12196-W-24

SET NO:
SHEET NO: 8 OF 72

3/11/2026 1:37:52 PM

BID PACKAGE - NOT FOR CONSTRUCTION

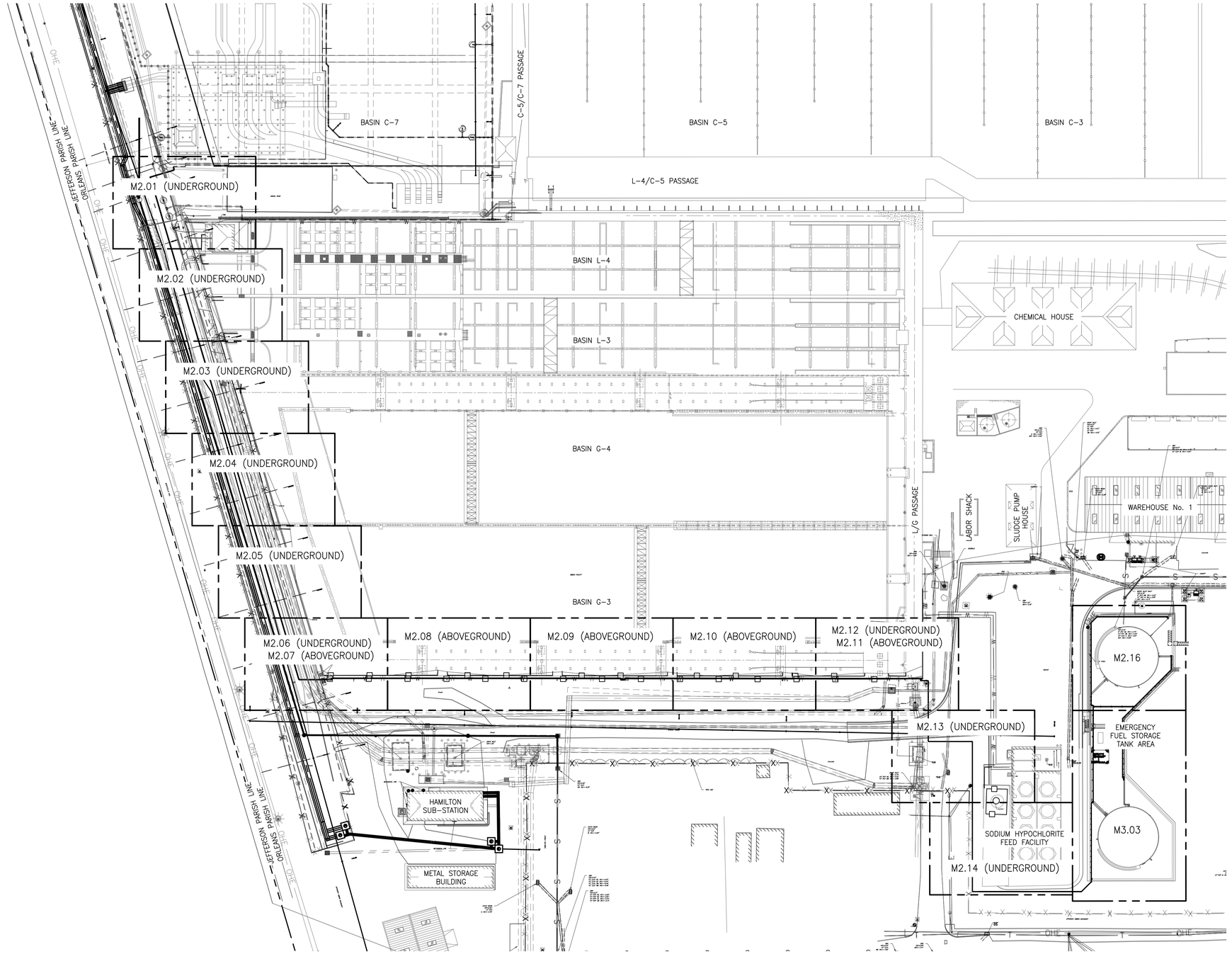

OVERALL PIPING PLAN

SCALE: 1" = 50'

0 50' 100'

SCALE: 1" = 50'

REV.	DATE	DESCRIPTION	BY
0	03/11/2026	ISSUED FOR BID	LEK

SEWERAGE AND WATER BOARD OF NEW ORLEANS

CONTRACT No. 1444

WEST POWER COMPLEX @ CWPT
FUEL OIL DELIVERY SYSTEM

MECHANICAL

OVERALL PIPING PLAN

STATE OF LOUISIANA
LESLIE E. KELLY
License No. 39645
PROFESSIONAL ENGINEER
IN
MECHANICAL ENGINEERING
3/11/2026

WSP USA INC.
ONE PENN PLAZA, 4TH FLOOR,
NEW YORK, NY 10119
CERTIFICATE OF REGISTRATION # EF.0000623

FIRM No: LA – EF. 0003109
Infinity Engineering Consultants, LLC
Civil | Structural | Mechanical | Electrical | Marine | Transportation
Metairie, LA www.infinityec.com 504-304-0548

DATE	03/11/2026	JOB NO.	22-017

DESIGNED BY: L. KELLY
FILE NAME: M2.00 OVERALL PIPING PLAN.dwg

DR.	R. SCHOUEST
CK:	L. WEST
AP:	L. KELLY
LAST EDIT:	
SCALE:	AS NOTED
DATE:	03/11/2026

A/E DWG NO.
M2.00

DWG. No. 12196-W-24

SET NO: SHEET NO: 9 OF 72

BID PACKAGE - NOT FOR CONSTRUCTION

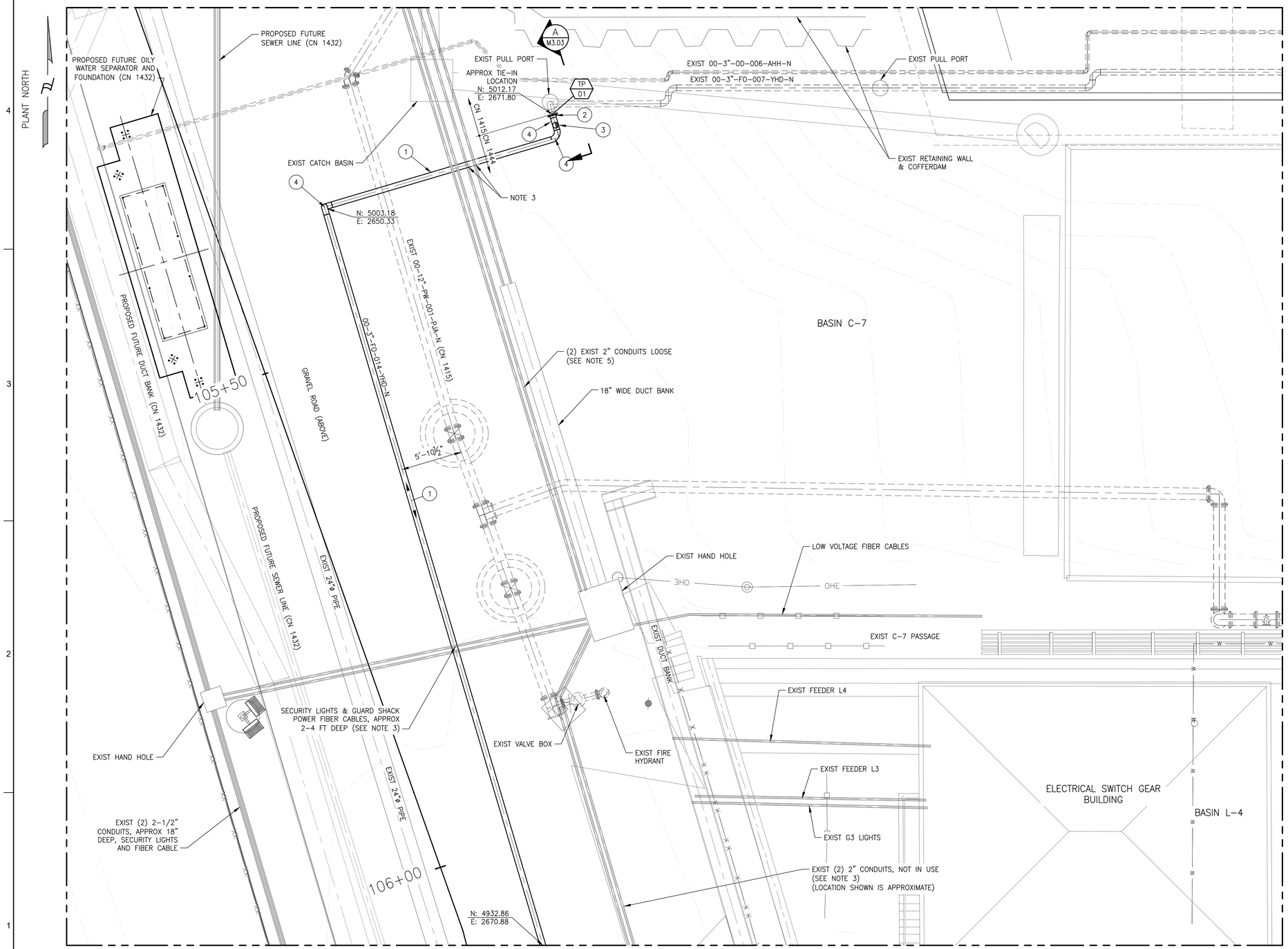

MATCHLINE DWG M2.02

UNDERGROUND PIPING PLAN

SCALE: 1" = 5'

0 5' 10'

SCALE: 1" = 5'

LEGEND		
ITEM#	DESCRIPTION	NPD(IN)
1	PIPE, DOUBLE WALL PIPING WITH LEAK DETECTION, 6" CONTAINMENT PIPE, MATERIAL SPEC YHD	3
2	FLANGE, BUTTWELD, RF, CLASS 150, ASTM 105, ASME B16.5, STD BORE, WN OR SLIP-ON	3
3	TEE, DOUBLE WALL PIPING WITH LEAK DETECTION, 6" CONTAINMENT FITTING, MATERIAL SPEC YHD	3
4	90° ELBOW, DOUBLE WALL PIPING WITH LEAK DETECTION, 6" CONTAINMENT FITTING, MATERIAL SPEC YHD	3

NOTES:

1. PIPING SHALL MEET PIPE SPECIFICATIONS NOTED HC01 AND YHD.
2. CONTRACTOR TO VERIFY FINAL GRADE. UNDERGROUND PIPING TO BE MINIMUM 3'-6" BELOW FINAL GRADE UNLESS NOTED OTHERWISE.
3. CONTRACTOR SHALL EXCAVATE CAREFULLY IN THE AREA OF KNOWN CONDUITS AND DUCT BANK TO AVOID DAMAGE. IF CONDUITS OR DUCT BANK ARE DAMAGED DURING CONSTRUCTION, CONTRACTOR SHALL REPAIR.
4. CONTRACTOR SHALL PROVIDE ONE (1) WEEK ADVANCE NOTICE OF PROPOSED POWER OUTAGE REQUESTS IF CROSSING OR WITHIN 10 FEET OF EXISTING ELECTRICAL DUCT BANK. SEE GENERAL NOTES.
5. CONDUITS ARE ABANDONED IN PLACE. IF ENCOUNTERED AND IN CONFLICT WITH CONSTRUCTION, THEY CAN BE REMOVED.

REV:	DATE	DESCRIPTION	BY
0	03/11/2026	ISSUED FOR BID	LEK

STATE OF LOUISIANA
LINDA EVANS KELLY
License No. 39645
PROFESSIONAL ENGINEER
IN
MECHANICAL ENGINEERING
3/11/2026

WSP USA Inc.
ONE PENN PLAZA, 4TH FLOOR,
NEW YORK, NY 10119
CERTIFICATE OF REGISTRATION # EF 2000623

FIRM No: LA – EF. 0003109
Infinity Engineering Consultants, LLC
Civil | Structural | Mechanical | Electrical | Marine | Transportation
Metairie, LA www.infinityec.com 504-304-0548

DATE	03/11/2026
JOB NO.	22-017
DESIGNED BY:	L. KELLY
FILE NAME:	M2.01 UNDERGROUND PIPING PLAN.dwg

SEWERAGE AND WATER BOARD OF NEW ORLEANS

CONTRACT No. 1444

WEST POWER COMPLEX @ CWPT
FUEL OIL DELIVERY SYSTEM

MECHANICAL

UNDERGROUND PIPING PLAN

DR:	R. SCHOUEST
CK:	L. KELLY
AP:	L. KELLY
LAST EDIT:	
SCALE:	AS NOTED
DATE:	03/11/2026

A/E DWG NO.: M2.01

DWG. No. 12196-W-24

SET NO: SHEET NO: OF

BID PACKAGE - NOT FOR CONSTRUCTION

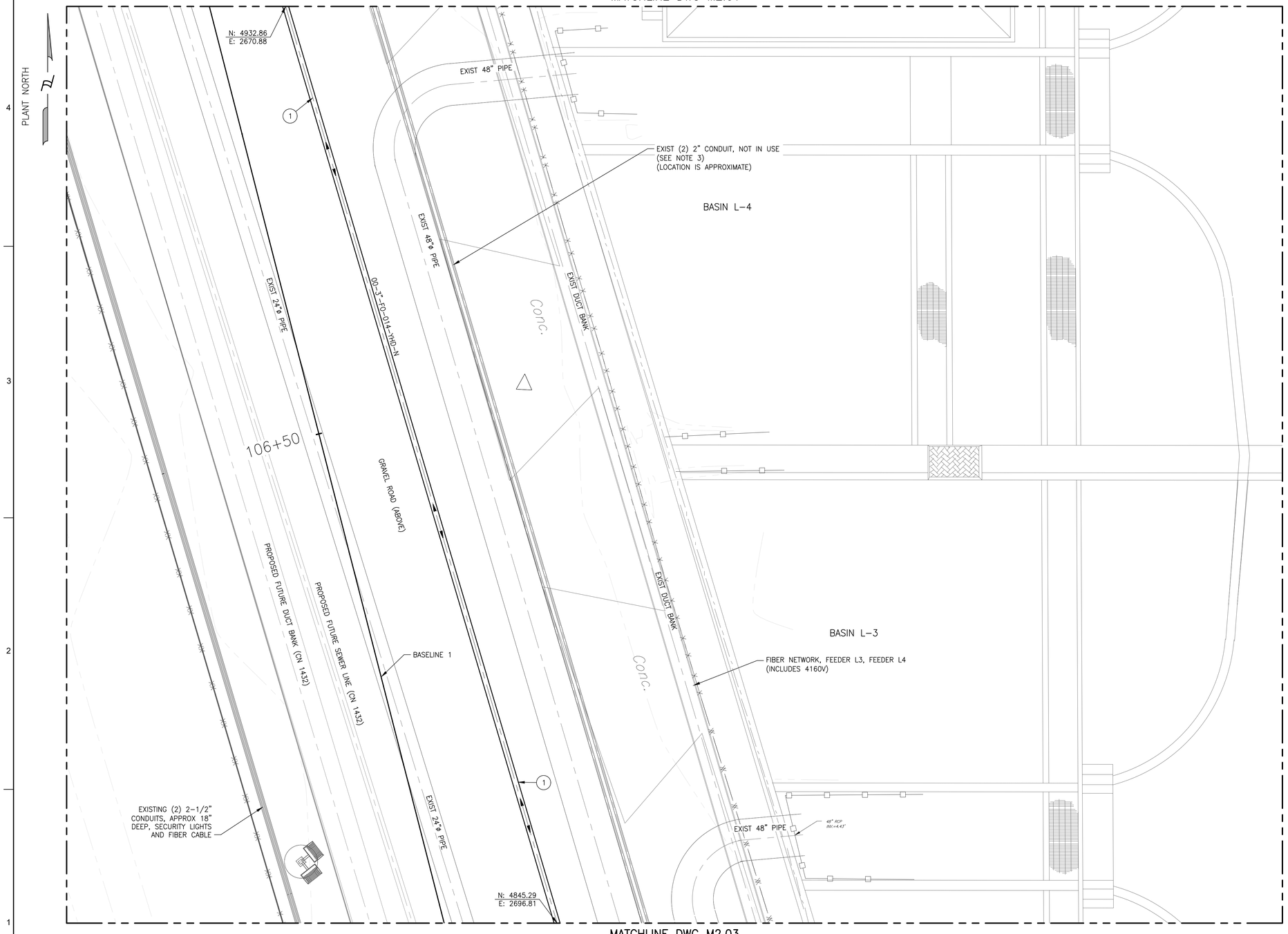

UNDERGROUND PIPING PLAN

SCALE: 1" = 5'

0 5' 10'

SCALE: 1" = 5'

LEGEND		
ITEM#	DESCRIPTION	NPD(IN)
1	PIPE, DOUBLE WALL PIPING WITH LEAK DETECTION, 6" CONTAINMENT PIPE, MATERIAL SPEC YHD	3
2	90° ELBOW, DOUBLE WALL PIPING WITH LEAK DETECTION, 6" CONTAINMENT FITTING, MATERIAL SPEC YHD	3

NOTES:

1. PIPING SHALL MEET PIPE SPECIFICATIONS NOTED HC01 AND YHD.
2. CONTRACTOR TO VERIFY FINAL GRADE. UNDERGROUND PIPING TO BE MINIMUM 3'-6" BELOW FINAL GRADE UNLESS NOTED OTHERWISE.
3. CONTRACTOR SHALL EXCAVATE CAREFULLY IN THE AREA OF KNOWN CONDUITS AND DUCT BANK TO AVOID DAMAGE. IF CONDUITS OR DUCT BANK ARE DAMAGED DURING CONSTRUCTION, CONTRACTOR SHALL REPAIR.
4. CONTRACTOR SHALL PROVIDE ONE (1) WEEK ADVANCE NOTICE OF PROPOSED POWER OUTAGE REQUESTS IF CROSSING OR WITHIN 10 FEET OF EXISTING ELECTRICAL DUCT BANK. SEE GENERAL NOTES.

REV.	DATE	DESCRIPTION	BY
0	03/11/2026	ISSUED FOR BID	LEK

STATE OF LOUISIANA
LESLIE EVAN KELLY
License No. 39645
PROFESSIONAL ENGINEER
IN
MECHANICAL ENGINEERING
3/11/2026

WSP USA INC.
ONE PENN PLAZA, 4TH FLOOR,
NEW YORK, NY 10119
CERTIFICATE OF REGISTRATION # EF.2000923

FIRM No: LA – EF. 0003109
Infinity Engineering Consultants, LLC
Civil | Structural | Mechanical | Electrical | Marine | Transportation
Metairie, LA www.infinityec.com 504-304-0548

DATE	03/11/2026	JOB NO.	22-017
DESIGNED BY: L. KELLY			
FILE NAME: M2.01 UNDERGROUND PIPING PLAN.dwg			

SEWERAGE AND WATER BOARD OF NEW ORLEANS

CONTRACT No. 1444

WEST POWER COMPLEX @ CWPT
FUEL OIL DELIVERY SYSTEM

MECHANICAL

UNDERGROUND PIPING PLAN

DR:	R. SCHOUEST
CK:	L. KELLY
AP:	L. KELLY
LAST EDIT:	
SCALE:	AS NOTED
DATE:	03/11/2026

A/E DWG NO. M2.02

DWG. No. 12196-W-24

SET NO: SHEET NO: 11 OF 72

BID PACKAGE - NOT FOR CONSTRUCTION

MATCHLINE DWG M2.02

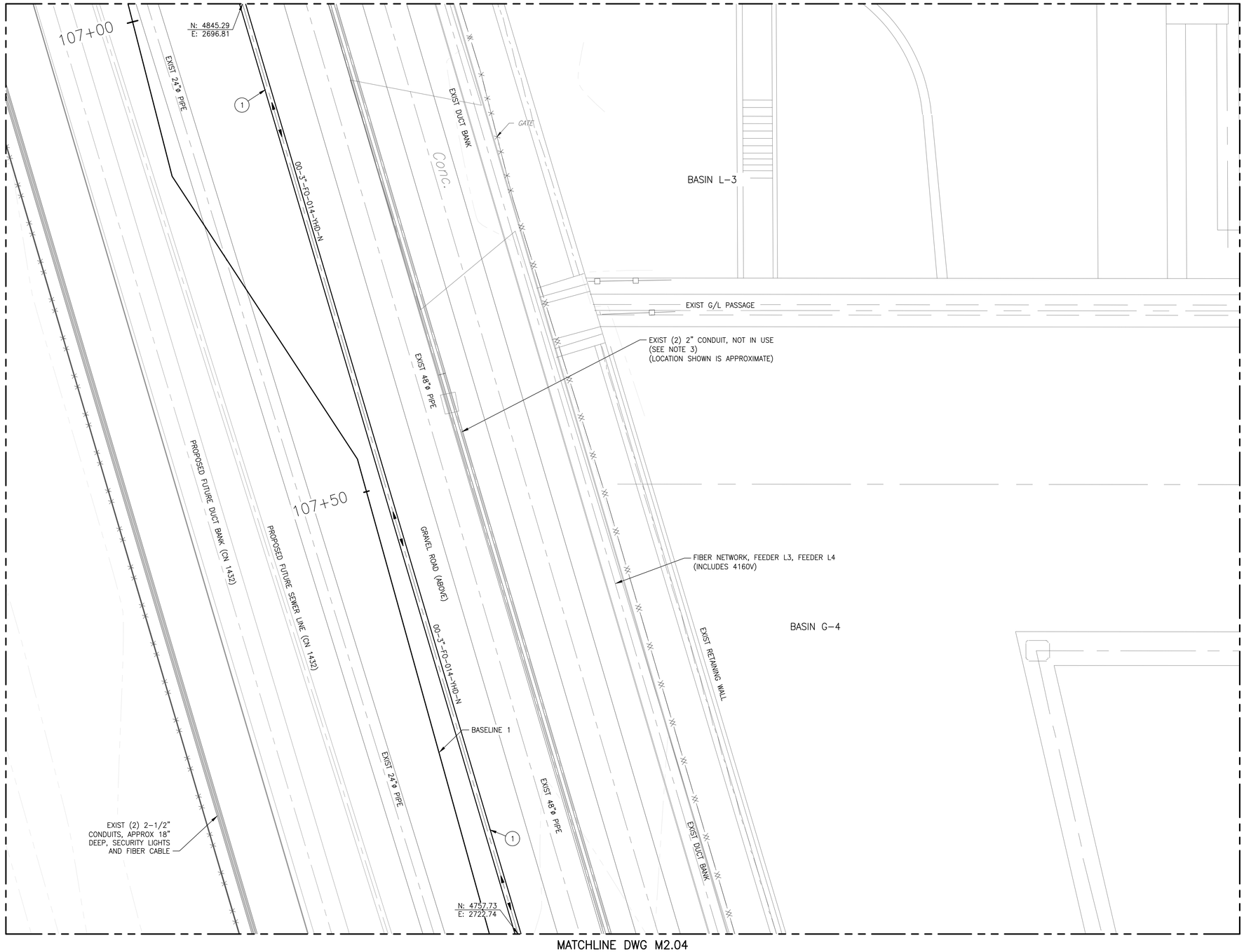

MATCHLINE DWG M2.04

UNDERGROUND PIPING PLAN

SCALE: 1" = 5'

0 5' 10'

SCALE: 1" = 5'

LEGEND		
ITEM#	DESCRIPTION	NPD(IN)
1	PIPE, DOUBLE WALL PIPING WITH LEAK DETECTION, 6" CONTAINMENT PIPE, MATERIAL SPEC YHD	3

NOTES:

1. PIPING SHALL MEET PIPE SPECIFICATIONS NOTED HC01 AND YHD.
2. CONTRACTOR TO VERIFY FINAL GRADE. UNDERGROUND PIPING TO BE MINIMUM 3'-6" BELOW FINAL GRADE UNLESS NOTED OTHERWISE.
3. CONTRACTOR SHALL EXCAVATE CAREFULLY IN THE AREA OF KNOWN CONDUITS AND DUCT BANK TO AVOID DAMAGE. IF CONDUITS OR DUCT BANK ARE DAMAGED DURING CONSTRUCTION, CONTRACTOR SHALL REPAIR.
4. CONTRACTOR SHALL PROVIDE ONE (1) WEEK ADVANCE NOTICE OF PROPOSED POWER OUTAGE REQUESTS IF CROSSING OR WITHIN 10 FEET OF EXISTING ELECTRICAL DUCT BANK. SEE GENERAL NOTES.

REV.	DATE	DESCRIPTION	BY
0	05/01/2026	ISSUED FOR BID	LEK

STATE OF LOUISIANA
LAURA EYMAN KELLY
License No. 39645
PROFESSIONAL ENGINEER
IN
MECHANICAL ENGINEERING
5/1/2026

WSP USA INC.
ONE PENN PLAZA, 9TH FLOOR,
NEW YORK, NY 10119
CERTIFICATE OF REGISTRATION # EF.0000823

Infinity Engineering Consultants, LLC
FIRM No: LA - EF. 0003709
AEC Project No. 22-017
Civil | Structural | Mechanical | Electrical | Marine | Transportation
Metairie, LA www.infinityec.com 504-304-0548

DATE	05/01/2026	JOB NO.	22-017
DESIGNED BY: L. KELLY			
FILE NAME: M2.01 UNDERGROUND PIPING PLAN.dwg			

SEWERAGE AND WATER BOARD OF NEW ORLEANS

CONTRACT No. 1444

WEST POWER COMPLEX @ CWPT
FUEL OIL DELIVERY SYSTEM

MECHANICAL

UNDERGROUND PIPING PLAN

DR:	R. SCHOUEST	A/E DWG NO.	M2.03
CK:	L. KELLY		
AP:	L. KELLY		
LAST EDIT:		DWG. No.	12196-W-24
SCALE:	AS NOTED		
DATE:	05/01/2026	SET NO:	SHEET NO: OF

BID PACKAGE - NOT FOR CONSTRUCTION

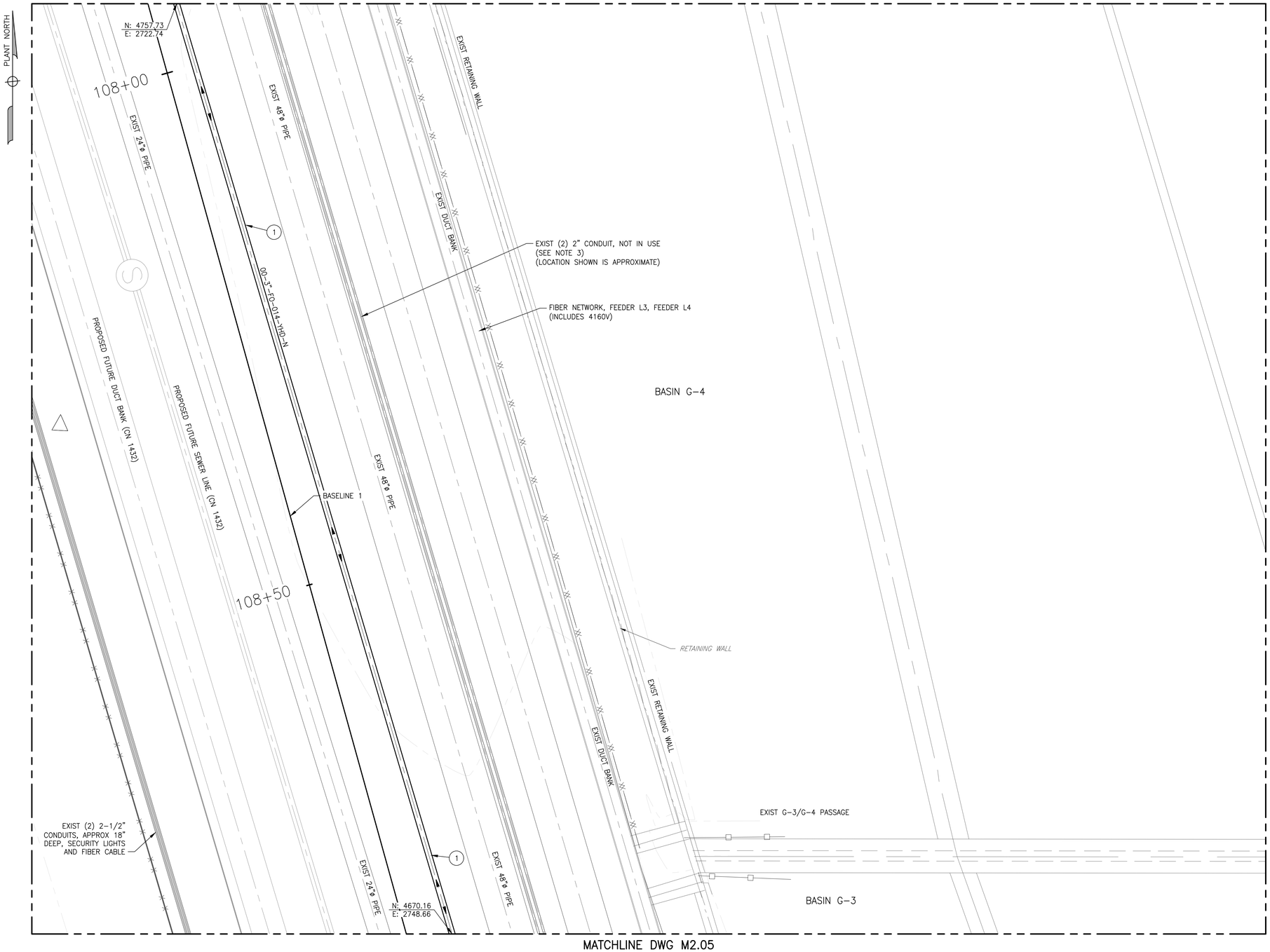

UNDERGROUND PIPING PLAN

SCALE: 1" = 5'

0 5' 10'

SCALE: 1" = 5'

LEGEND		
ITEM#	DESCRIPTION	NPD(IN)
1	PIPE, DOUBLE WALL PIPING WITH LEAK DETECTION, 6" CONTAINMENT PIPE, MATERIAL SPEC YHD	3

NOTES:

1. PIPING SHALL MEET PIPE SPECIFICATIONS NOTED HC01 AND YHD.
2. CONTRACTOR TO VERIFY FINAL GRADE. UNDERGROUND PIPING TO BE MINIMUM 3'-6" BELOW FINAL GRADE UNLESS NOTED OTHERWISE.
3. CONTRACTOR SHALL EXCAVATE CAREFULLY IN THE AREA OF KNOWN CONDUITS AND DUCT BANK TO AVOID DAMAGE. IF CONDUITS OR DUCT BANK ARE DAMAGED DURING CONSTRUCTION, CONTRACTOR SHALL REPAIR.
4. CONTRACTOR SHALL PROVIDE ONE (1) WEEK ADVANCE NOTICE OF PROPOSED POWER OUTAGE REQUESTS IF CROSSING OR WITHIN 10 FEET OF EXISTING ELECTRICAL DUCT BANK. SEE GENERAL NOTES.

REV.	DATE	DESCRIPTION	BY
0	03/11/2026	ISSUED FOR BID	LEK

STATE OF LOUISIANA
LADRA EYMAN KELLY
License No. 39645
PROFESSIONAL ENGINEER
IN
MECHANICAL ENGINEERING
3/11/2026

WSP USA INC.
ONE PENN PLAZA, 5TH FLOOR,
NEW YORK, NY 10119
CERTIFICATE OF REGISTRATION # EF.0000023

FIRM No LA – EF. 0003109
Infinity Engineering Consultants, LLC
Civil | Structural | Mechanical | Electrical | Marine | Transportation
Metairie, LA www.infinityec.com 504-304-0548

DATE	03/11/2026	JOB NO.	22-017
DESIGNED BY: L. KELLY			
FILE NAME: M2.01 UNDERGROUND PIPING PLAN.dwg			

SEWERAGE AND WATER BOARD OF NEW ORLEANS

CONTRACT No. 1444

WEST POWER COMPLEX @ CWPT
FUEL OIL DELIVERY SYSTEM

MECHANICAL

UNDERGROUND PIPING PLAN

DR.	R. SCHOUEST
CK:	L. KELLY
AP:	L. KELLY
LAST EDIT:	
SCALE:	AS NOTED
DATE:	03/11/2026

A/E DWG NO.
M2.04

DWG. No. 12196-W-24

SHEET NO: 13 OF 72

BID PACKAGE - NOT FOR CONSTRUCTION

MATCHLINE DWG M2.04

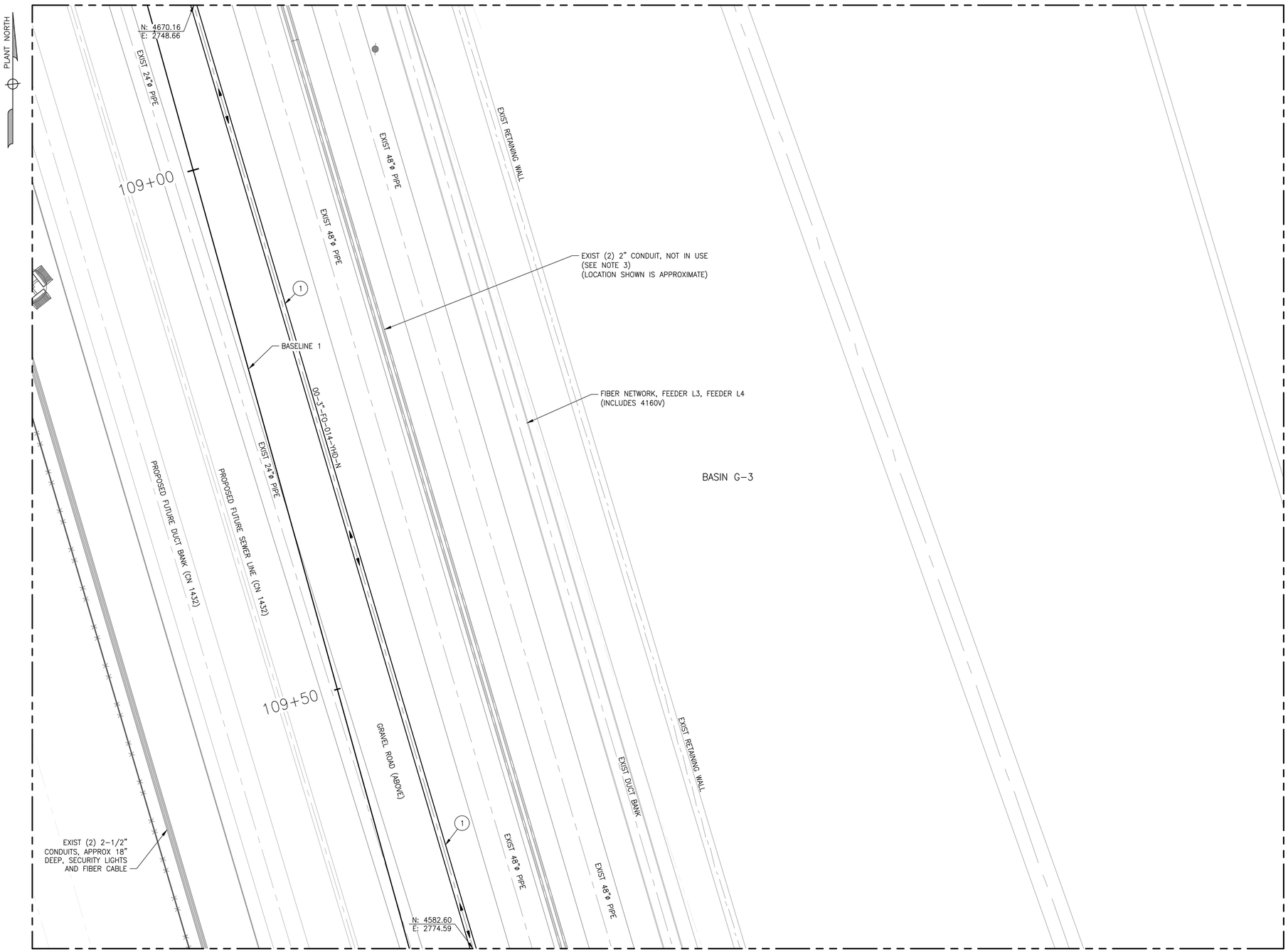

MATCHLINE DWG M2.06

UNDERGROUND PIPING PLAN

SCALE: 1" = 5'

0 5' 10'

SCALE: 1" = 5'

LEGEND		
ITEM#	DESCRIPTION	NPD(IN)
1	PIPE, DOUBLE WALL PIPING WITH LEAK DETECTION, 6" CONTAINMENT PIPE, MATERIAL SPEC YHD	3

NOTES:

1. PIPING SHALL MEET PIPE SPECIFICATIONS NOTED HC01 AND YHD.
2. CONTRACTOR TO VERIFY FINAL GRADE. UNDERGROUND PIPING TO BE MINIMUM 3'-6" BELOW FINAL GRADE UNLESS NOTED OTHERWISE.
3. CONTRACTOR SHALL EXCAVATE CAREFULLY IN THE AREA OF KNOWN CONDUITS AND DUCT BANK TO AVOID DAMAGE. IF CONDUITS OR DUCT BANK ARE DAMAGED DURING CONSTRUCTION, CONTRACTOR SHALL REPAIR.
4. CONTRACTOR SHALL PROVIDE ONE (1) WEEK ADVANCE NOTICE OF PROPOSED POWER OUTAGE REQUESTS IF CROSSING OR WITHIN 10 FEET OF EXISTING ELECTRICAL DUCT BANK. SEE GENERAL NOTES.

REV.	DATE	DESCRIPTION	BY
0	03/11/2026	ISSUED FOR BID	LEK

LADRA EYMAN KELLY
License No. 39645
PROFESSIONAL ENGINEER
IN
MECHANICAL ENGINEERING
STATE OF LOUISIANA
3/11/2026

WSP USA INC.
ONE PENN PLAZA, 5TH FLOOR,
NEW YORK, NY 10119
CERTIFICATE OF REGISTRATION # EF.0000823

Infinity Engineering Consultants, LLC
FIRM No LA – EF. 0003109
IEC Project No. 22-017
Civil | Structural | Mechanical | Electrical | Marine | Transportation
Metairie, LA www.infinityec.com 504-308-0548

SEWERAGE AND WATER BOARD OF NEW ORLEANS

CONTRACT No. 1444
WEST POWER COMPLEX @ CWPT
FUEL OIL DELIVERY SYSTEM

MECHANICAL

UNDERGROUND PIPING PLAN

DR.	R. SCHOUEST
CK:	L. KELLY
AP:	L. KELLY
LAST EDIT:	
SCALE:	AS NOTED
DATE:	03/11/2026
A/E DWG NO.	M2.05
DWG. No.	12196-W-24
SET NO:	SHEET NO: 14 OF 72

DATE	03/11/2026	JOB NO.	22-017
DESIGNED BY: L. KELLY			
FILE NAME: M2.01 UNDERGROUND PIPING PLAN.dwg			

BID PACKAGE - NOT FOR CONSTRUCTION

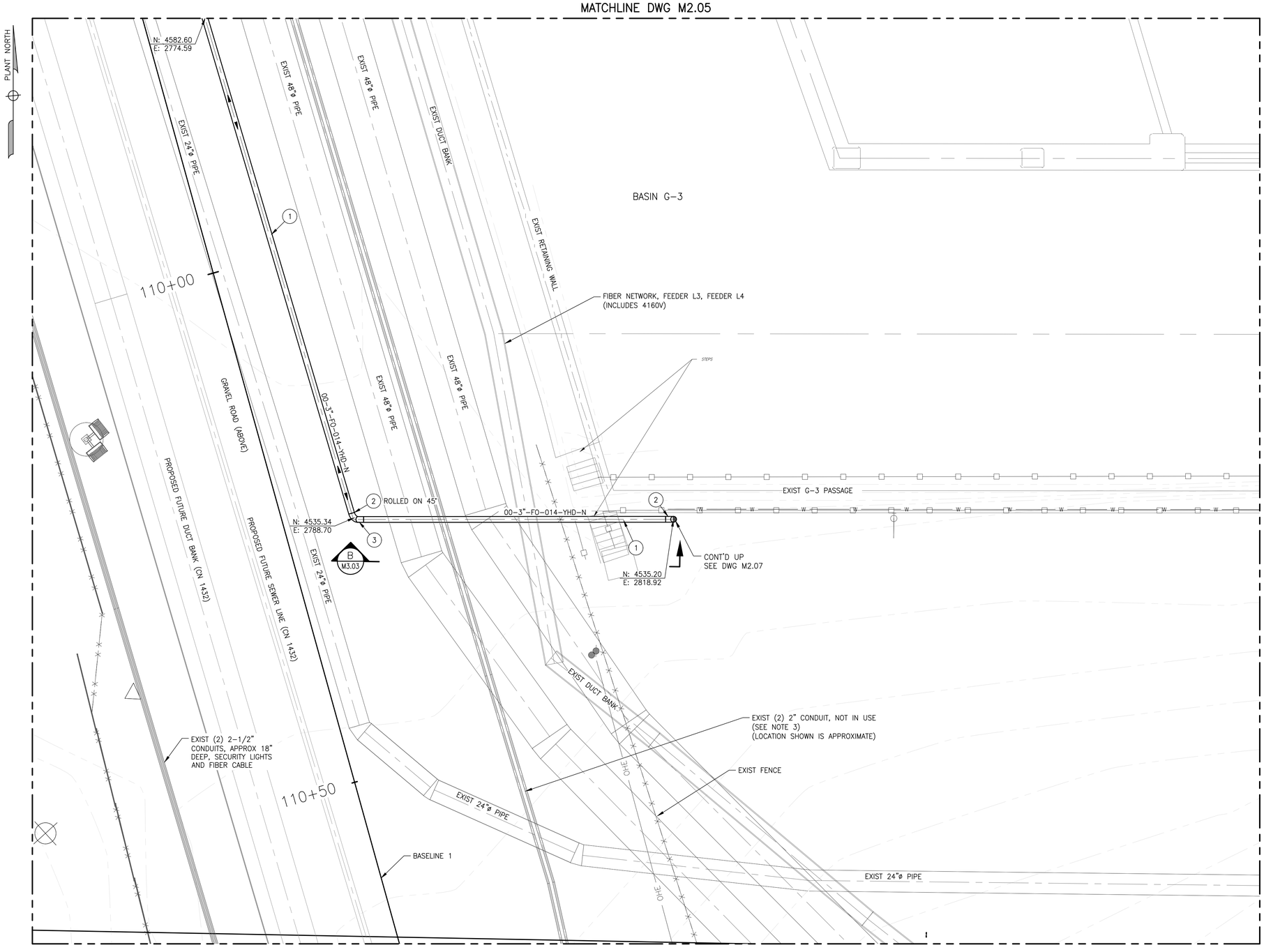

LEGEND		
ITEM#	DESCRIPTION	NPD(IN)
1	PIPE, DOUBLE WALL PIPING WITH LEAK DETECTION, 6" CONTAINMENT PIPE, MATERIAL SPEC YHD	3
2	90° ELBOW, DOUBLE WALL PIPING WITH LEAK DETECTION, 6" CONTAINMENT FITTING, MATERIAL SPEC YHD	3
3	45° ELBOW, SCH STD, CS, BE, ASTM, A234 GR. WPB, ASME B16.9	3

NOTES:

1. PIPING SHALL MEET PIPE SPECIFICATIONS NOTED HC01 AND YHD.
2. CONTRACTOR TO VERIFY FINAL GRADE. UNDERGROUND PIPING TO BE MINIMUM 3'-6" BELOW FINAL GRADE UNLESS NOTED OTHERWISE.
3. CONTRACTOR SHALL EXCAVATE CAREFULLY IN THE AREA OF KNOWN CONDUITS AND DUCT BANK TO AVOID DAMAGE. IF CONDUITS OR DUCT BANK ARE DAMAGED DURING CONSTRUCTION, CONTRACTOR SHALL REPAIR.
4. CONTRACTOR SHALL PROVIDE ONE (1) WEEK ADVANCE NOTICE OF PROPOSED POWER OUTAGE REQUESTS IF CROSSING OR WITHIN 10 FEET OF EXISTING ELECTRICAL DUCT BANK. SEE GENERAL NOTES.

UNDERGROUND PIPING PLAN

SCALE: 1" = 5'

0 5' 10'

SCALE: 1" = 5'

REV.	DATE	DESCRIPTION	BY
0	03/11/2026	ISSUED FOR BID	LEK

LESLIE LYMAN KELLY
License No. 39645
PROFESSIONAL ENGINEER
IN
MECHANICAL ENGINEERING
3/11/2026

WSP USA INC.
ONE PENN PLAZA, 5TH FLOOR,
NEW YORK, NY 10119
CERTIFICATE OF REGISTRATION # EF.2000623

FIRM No LA – EF. 0003109
Infinity Engineering Consultants, LLC
Civil | Structural | Mechanical | Electrical | Marine | Transportation
Metairie, LA www.infinityeci.com 504-304-0548

DATE	03/11/2026	JOB NO.	22-017

DESIGNED BY: L. KELLY
FILE NAME: M2.01 UNDERGROUND PIPING PLAN.dwg

SEWERAGE AND WATER BOARD OF NEW ORLEANS

CONTRACT No. 1444
WEST POWER COMPLEX @ CWPT
FUEL OIL DELIVERY SYSTEM

MECHANICAL

UNDERGROUND PIPING PLAN

DR:	R. SCHOUEST
CK:	L. KELLY
AP:	L. KELLY
LAST EDIT:	
SCALE:	AS NOTED
DATE:	03/11/2026

A/E DWG NO. M2.06

DWG. No. 12196-W-24

SET NO: SHEET NO: 15 OF 72

BID PACKAGE - NOT FOR CONSTRUCTION

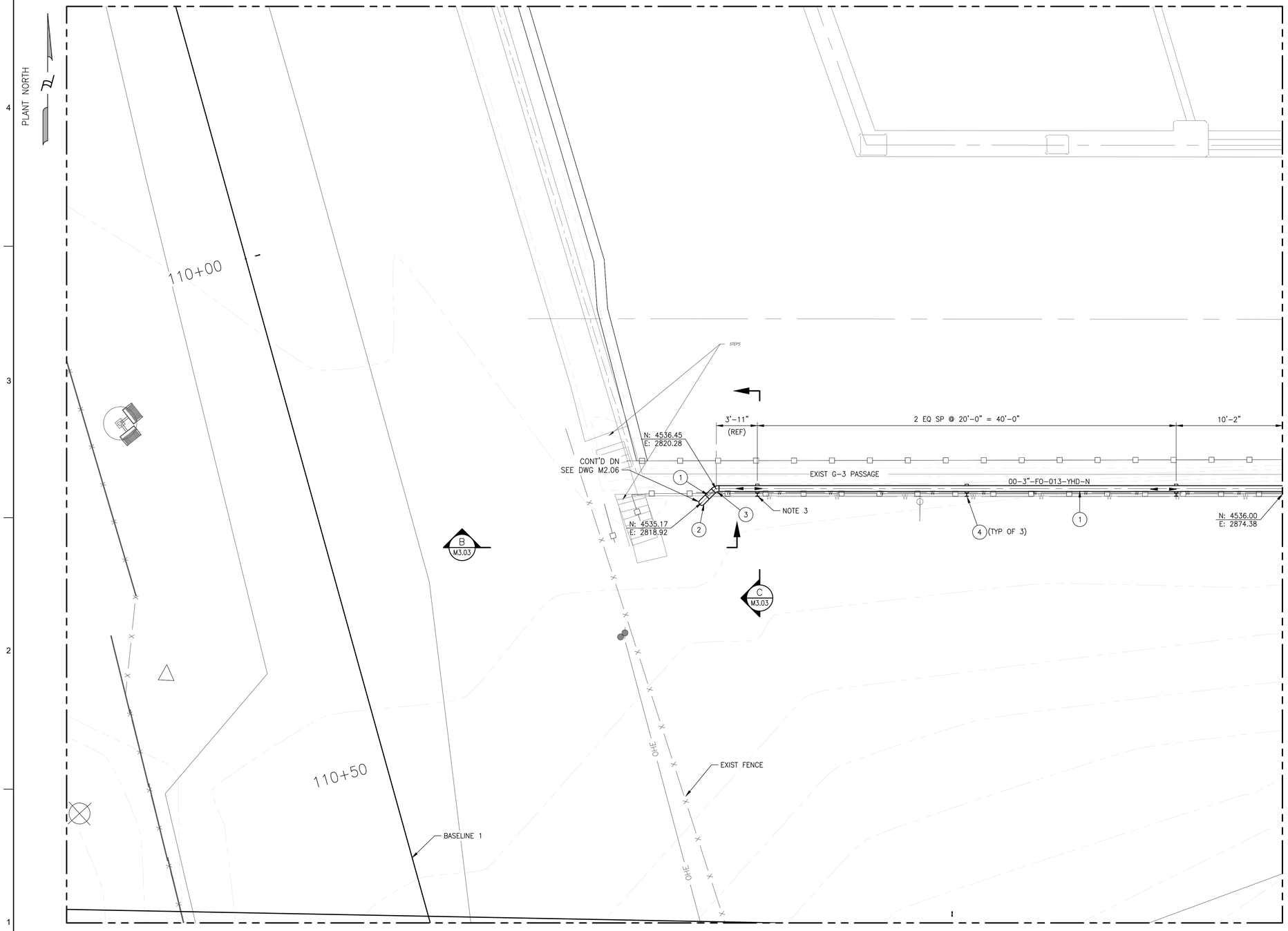

ABOVEGROUND PIPING PLAN

SCALE: 1" = 5'

0 5' 10'

SCALE: 1" = 5'

LEGEND		
ITEM#	DESCRIPTION	NPD(IN)
1	PIPE, DOUBLE WALL PIPING WITH LEAK DETECTION, 6" CONTAINMENT PIPE, MATERIAL SPEC YHD	3
2	90° ELBOW, DOUBLE WALL PIPING WITH LEAK DETECTION, 6" CONTAINMENT FITTING, MATERIAL SPEC YHD	3
3	45° ELBOW, DOUBLE WALL PIPING WITH LEAK DETECTION, 6" CONTAINMENT FITTING, MATERIAL SPEC YHD	3
4	PS-6, SEE DETAIL ON SHT M5.00	

NOTES:

1. PIPING SHALL MEET PIPE SPECIFICATIONS NOTED HC01 AND YHD.
2. CONTRACTOR SHALL PROVIDE ONE (1) WEEK ADVANCE NOTICE OF PROPOSED POWER OUTAGE REQUESTS IF CROSSING OR WITHIN 10 FEET OF EXISTING ELECTRICAL DUCT BANK. SEE GENERAL NOTES.
3. INSTALL PIPE ANCHOR ATTACHED TO CARRIER PIPE AND CONDUIT AND ANCHOR AT SUPPORT ADJACENT TO TURNDOWN BELOW GROUND. COORDINATE WITH DOUBLE WALL PIPE MANUFACTURER.

REV.	DATE	DESCRIPTION	BY
0	03/11/2026	ISSUED FOR BID	LEK

STATE OF LOUISIANA
LESLIE E. KELLY
License No. 39645
PROFESSIONAL ENGINEER
IN
MECHANICAL ENGINEERING
3/11/2026

WSP USA INC.
ONE PENN PLAZA, 4TH FLOOR,
NEW YORK, NY 10119
CERTIFICATE OF REGISTRATION # EF.0005623

FIRM No: LA – EF. 0003109
Infinity Engineering Consultants, LLC
Civil | Structural | Mechanical | Electrical | Interiors | Transportation
Metairie, LA www.infinityec.com 504-304-0548

DATE	03/11/2026	JOB NO.	22-017
DESIGNED BY: L. KELLY			
FILE NAME: M2.07 ABOVEGROUND PIPING PLAN.dwg			

SEWERAGE AND WATER BOARD OF NEW ORLEANS

CONTRACT No. 1444

WEST POWER COMPLEX @ CWPT
FUEL OIL DELIVERY SYSTEM

MECHANICAL

ABOVEGROUND PIPING PLAN

DR:	R. SCHOUEST
CK:	L. KELLY
AP:	L. KELLY
LAST EDIT:	
SCALE:	AS NOTED
DATE:	03/11/2026

A/E DWG NO. M2.07

DWG. No. 12196-W-24

SET NO: SHEET NO: 16 OF 72

BID PACKAGE - NOT FOR CONSTRUCTION

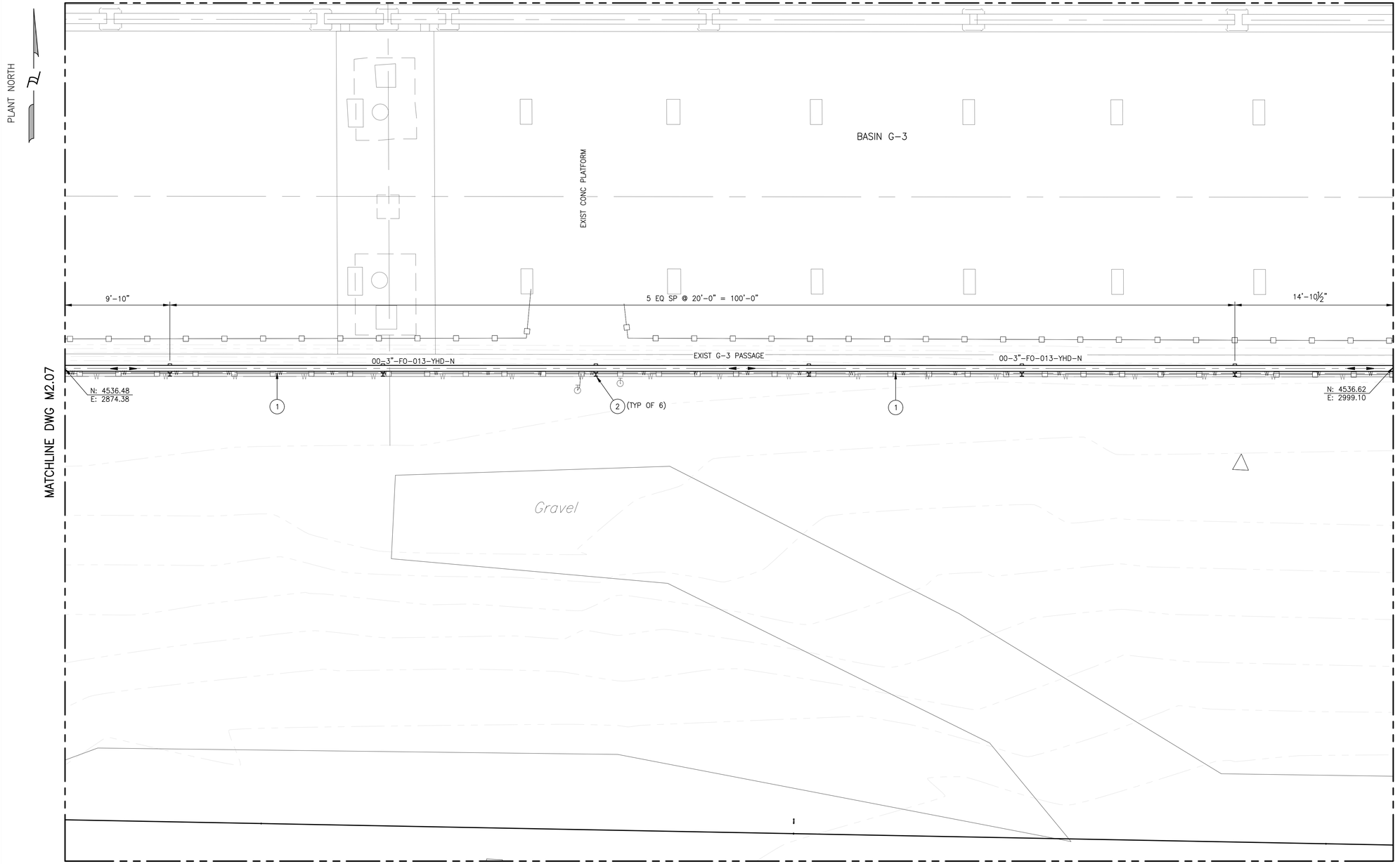

ABOVEGROUND PIPING PLAN

SCALE: 1" = 5'

0 5' 10'

SCALE: 1" = 5'

LEGEND		
ITEM#	DESCRIPTION	NPD(IN)
1	PIPE, DOUBLE WALL PIPING WITH LEAK DETECTION, 6" CONTAINMENT PIPE, MATERIAL SPEC YHD	3
2	PS-6, SEE DETAIL ON SHT M5.00	

NOTE:

1. PIPING SHALL MEET PIPE SPECIFICATIONS NOTED HC01 AND YHD.

REV:	DATE	DESCRIPTION	BY
0	03/11/2026	ISSUED FOR BID	LEK

STATE OF LOUISIANA
LARA E. KELLY
License No. 39645
PROFESSIONAL ENGINEER
IN
MECHANICAL ENGINEERING
3/11/2026

WSP USA INC.
ONE PENN PLAZA, 4TH FLOOR,
NEW YORK, NY 10119
CERTIFICATE OF REGISTRATION # EF.2000923

FIRM No LA – EF. 0003109
Infinity Engineering Consultants, LLC
(IEC Project No. 25-047)
Civil | Structural | Mechanical | Electrical | Marine | Transportation
Metairie, LA www.infinityec.com 504-304-0548

SEWERAGE AND WATER BOARD OF NEW ORLEANS

CONTRACT No. 1444

WEST POWER COMPLEX @ CWPT
FUEL OIL DELIVERY SYSTEM

MECHANICAL

ABOVEGROUND PIPING PLAN

DR.	R. SCHOUEST
CK:	L. KELLY
AP:	L. KELLY
LAST EDIT:	
SCALE:	AS NOTED
DATE:	03/11/2026

A/E DWG NO.
M2.08

DWG. No. 12196-W-24

SET NO: SHEET NO: 17 OF 72

DATE	03/11/2026	JOB NO.	22-017

DESIGNED BY: L. KELLY
FILE NAME: M2.07 ABOVEGROUND PIPING PLAN.dwg

BID PACKAGE - NOT FOR CONSTRUCTION

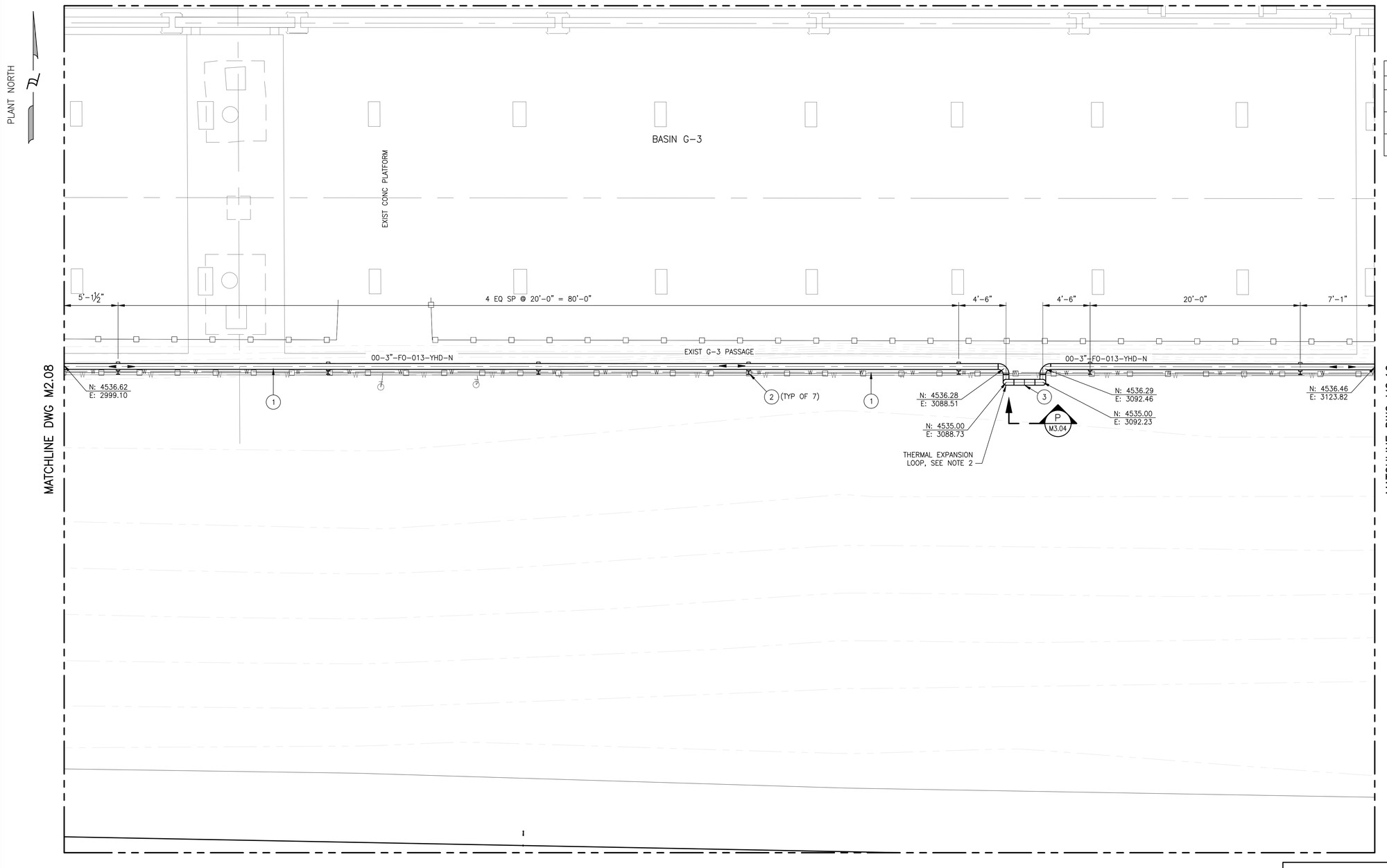

ABOVEGROUND PIPING PLAN

SCALE: 1" = 5'

0 5' 10'

SCALE: 1" = 5'

LEGEND		
ITEM#	DESCRIPTION	NPD(IN)
1	PIPE, DOUBLE WALL PIPING WITH LEAK DETECTION, 6" CONTAINMENT PIPE, MATERIAL SPEC YHD	3
2	PS-6, SEE DETAIL ON SHT M5.00	
3	PS-7, SEE DETAIL ON SHT M5.00	

NOTE:

1. PIPING SHALL MEET PIPE SPECIFICATIONS NOTED HC01 AND YHD.
2. SPACERS SHOULD NOT BE INSTALLED IN ELBOWS AND VERTICAL SEGMENTS OF THERMAL EXPANSION LOOP.

REV.	DATE	DESCRIPTION	BY
0	03/11/2026	ISSUED FOR BID	LEK

STATE OF LOUISIANA
LAURA LYMAN KELLY
License No. 39645
PROFESSIONAL ENGINEER
IN
MECHANICAL ENGINEERING
3/11/2026

SEWERAGE AND WATER BOARD OF NEW ORLEANS

CONTRACT No. 1444

WEST POWER COMPLEX @ CWPT
FUEL OIL DELIVERY SYSTEM

MECHANICAL

ABOVEGROUND PIPING PLAN

WSP USA INC.
ONE PENN PLAZA, 47TH FLOOR,
NEW YORK, NY 10119
CERTIFICATE OF AUTHORIZATION # EF.0000623

FIRM No: LA – EF. 0003709
Infinity Engineering Consultants, LLC
Civil | Structural | Mechanical | Electrical | Marine | Transportation
Metairie, LA www.infinityec.com 504-304-0548

DATE	03/11/2026
JOB NO.	22-017
DESIGNED BY:	L. KELLY
FILE NAME:	M2.07 ABOVEGROUND PIPING PLAN.dwg

DR:	R. SCHOUEST
CK:	L. KELLY
AP:	L. KELLY
LAST EDIT:	
SCALE:	AS NOTED
DATE:	03/11/2026

A/E DWG NO. M2.09

DWG. No. 12196-W-24

SHEET NO: 18 OF 72

BID PACKAGE - NOT FOR CONSTRUCTION

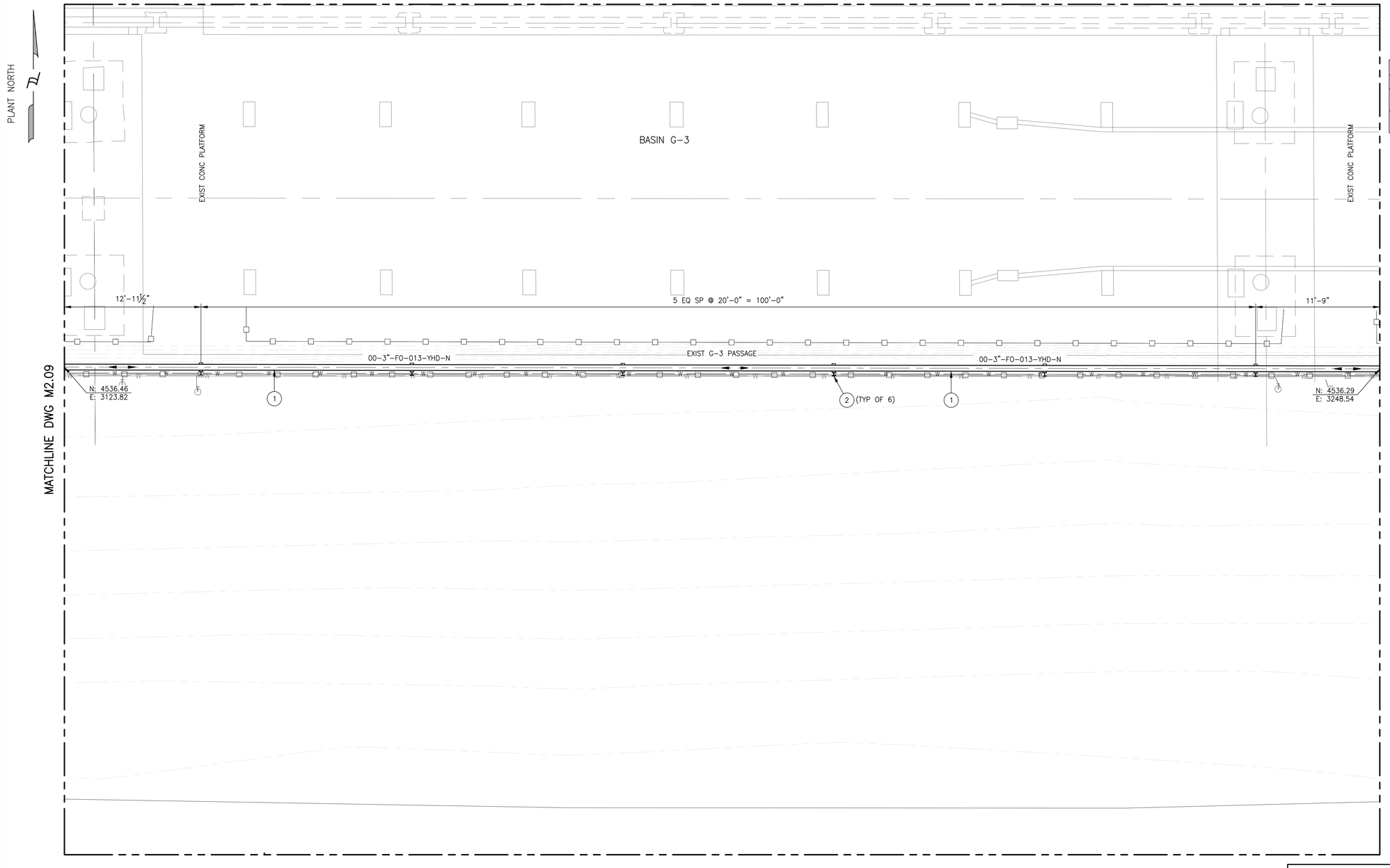

LEGEND		
ITEM#	DESCRIPTION	NPD(IN)
1	PIPE, DOUBLE WALL PIPING WITH LEAK DETECTION, 6" CONTAINMENT PIPE, MATERIAL SPEC YHD	3
2	PS-6, SEE DETAIL ON SHT M5.00	

NOTE:

1. PIPING SHALL MEET PIPE SPECIFICATIONS NOTED HC01 AND YHD.

ABOVEGROUND PIPING PLAN

SCALE: 1" = 5'

0 5' 10'

SCALE: 1" = 5'

REV.	DATE	DESCRIPTION	BY
0	03/11/2026	ISSUED FOR BID	LEK

STATE OF LOUISIANA
LAURA LYMAN KELLY
License No. 39645
PROFESSIONAL ENGINEER
IN
MECHANICAL ENGINEERING
3/11/2026

WSP USA Inc.
ONE PENN PLAZA, 47TH FLOOR,
NEW YORK, NY 10119
CERTIFICATE OF AUTHORIZATION # EF.0000623

Infinity Engineering Consultants, LLC
FIRM No: LA – EF. 0003709
Civil | Structural | Mechanical | Electrical | Marine | Transportation
Metairie, LA www.infinityec.com 504-304-0548

DATE	03/11/2026	JOB NO.	22-017

DESIGNED BY: L. KELLY
FILE NAME: M2.07 ABOVEGROUND PIPING PLAN.dwg

SEWERAGE AND WATER BOARD OF NEW ORLEANS

CONTRACT No. 1444

WEST POWER COMPLEX @ CWPT
FUEL OIL DELIVERY SYSTEM

MECHANICAL

ABOVEGROUND PIPING PLAN

DR:	R. SCHOUEST
CK:	L. KELLY
AP:	L. KELLY
LAST EDIT:	
SCALE:	AS NOTED
DATE:	03/11/2026

A/E DWG NO. M2.10

DWG. No. 12196-W-24

SET NO: SHEET NO: 19 OF 72

BID PACKAGE - NOT FOR CONSTRUCTION

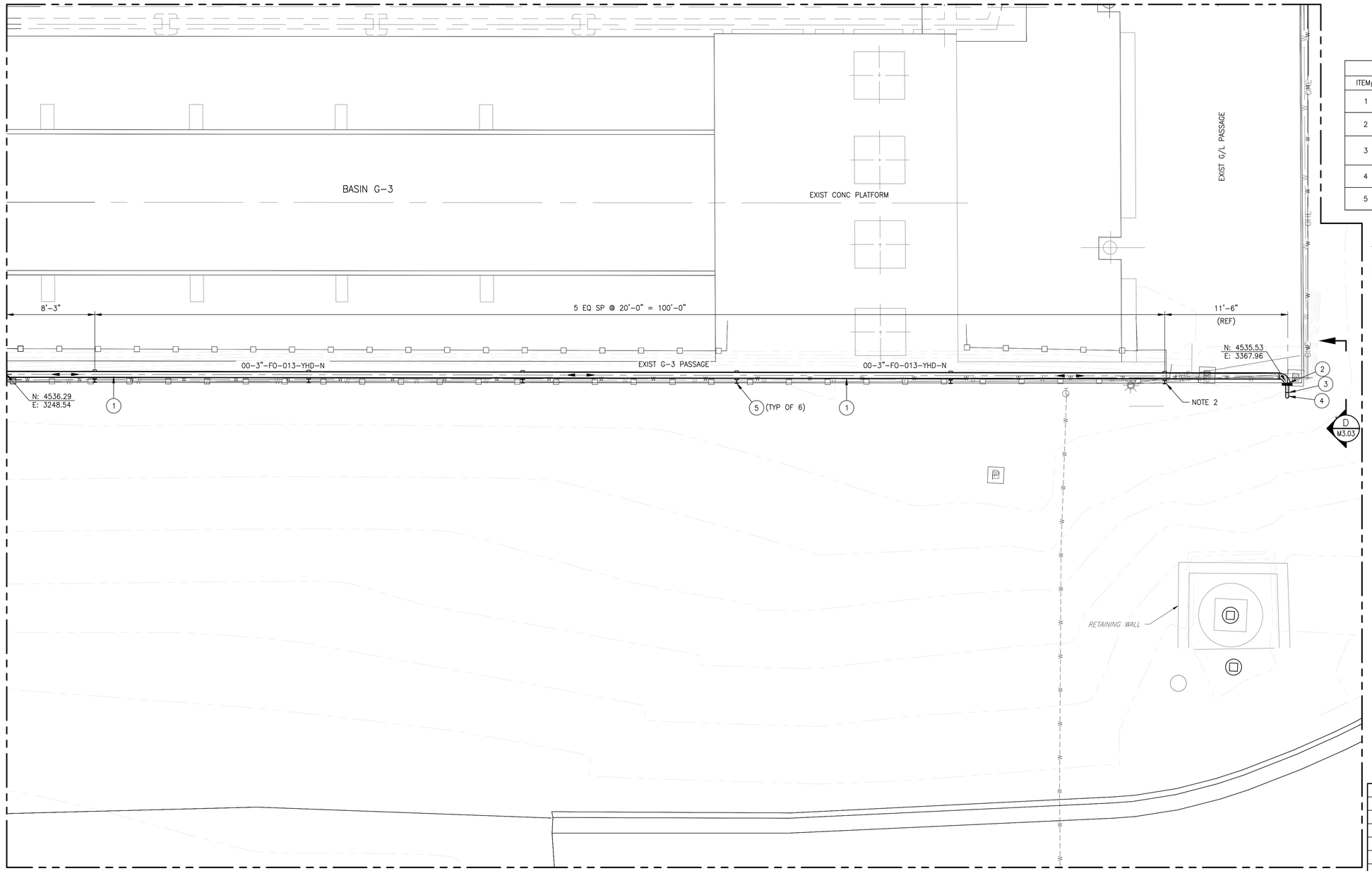

ABOVEGROUND PIPING PLAN

SCALE: 1" = 5'

0 5' 10'

SCALE: 1" = 5'

LEGEND		
ITEM#	DESCRIPTION	NPD(IN)
1	PIPE, DOUBLE WALL PIPING WITH LEAK DETECTION, 6" CONTAINMENT PIPE, MATERIAL SPEC YHD	3
2	90° ELBOW, DOUBLE WALL PIPING WITH LEAK DETECTION, 6" CONTAINMENT FITTING, MATERIAL SPEC YHD	3
3	FLANGE TERMINATION, DOUBLE WALL PIPING WITH LEAK DETECTION, 6" CONTAINMENT FITTING, MATERIAL SPEC YHD	3
4	90° ELBOW, SCH STD, CS, BE, ASTM A234 GR, WPB, ASME B16.9	3
5	PS-6, SEE DETAIL ON SHT M5.00	

NOTE:

1. PIPING SHALL MEET PIPE SPECIFICATIONS NOTED HC01 AND YHD.
2. INSTALL PIPE ANCHOR ATTACHED TO CARRIER PIPE AND CONDUIT AND ANCHOR AT SUPPORT ADJACENT TO TURNDOWN BELOW GROUND. COORDINATE WITH DOUBLE WALL PIPE MANUFACTURER.

REV.	DATE	DESCRIPTION	BY
0	03/11/2026	ISSUED FOR BID	LEK

STATE OF LOUISIANA
LAURA LYMAN KELLY
License No. 39645
PROFESSIONAL ENGINEER
IN
MECHANICAL ENGINEERING
3/11/2026

WSP USA INC.
ONE PENN PLAZA, 4TH FLOOR,
NEW YORK, NY 10119
CERTIFICATE OF AUTHORIZATION # EF.0000623

FIRM No: LA – EF. 0003709
Infinity Engineering Consultants, LLC
Civil | Structural | Mechanical | Electrical | Marine | Transportation
Metairie, LA www.infinityec.com 504-304-0548

DATE	03/11/2026	JOB NO.	22-017

DESIGNED BY: L. KELLY
FILE NAME: M2.07 ABOVEGROUND PIPING PLAN.dwg

SEWERAGE AND WATER BOARD OF NEW ORLEANS

CONTRACT No. 1444

WEST POWER COMPLEX @ CWPT
FUEL OIL DELIVERY SYSTEM

MECHANICAL

ABOVEGROUND PIPING PLAN

DR:	R. SCHOUEST
CK:	L. KELLY
AP:	L. KELLY
LAST EDIT:	
SCALE:	AS NOTED
DATE:	03/11/2026

A/E DWG NO. M2.11

DWG. No. 12196-W-24

SET NO: SHEET NO: 20 OF 72

BID PACKAGE - NOT FOR CONSTRUCTION

LEGEND		
ITEM#	DESCRIPTION	NPD(IN)
1	PIPE, SCH STD, CS, BE, ASTM A53 GR. B, ASME B36.10M	3
2	90° ELBOW, SCH STD, CS, BE, ASTM A234 GR. WPB, ASME B16.9	3
3	45° ELBOW, SCH STD, CS, BE, ASTM, A234 GR. WPB, ASME B16.9	3

NOTES:

1. PIPING SHALL MEET PIPE SPECIFICATIONS NOTED HC01 AND YHD.
2. CONTRACTOR TO VERIFY FINAL GRADE. UNDERGROUND PIPING TO BE MINIMUM 3'–6" BELOW FINAL GRADE UNLESS NOTED OTHERWISE.
3. CONTRACTOR SHALL PROVIDE ONE (1) WEEK ADVANCE NOTICE OF PROPOSED POWER OUTAGE REQUESTS IF CROSSING OR WITHIN 10 FEET OF EXISTING ELECTRICAL DUCT BANK. SEE GENERAL NOTES.

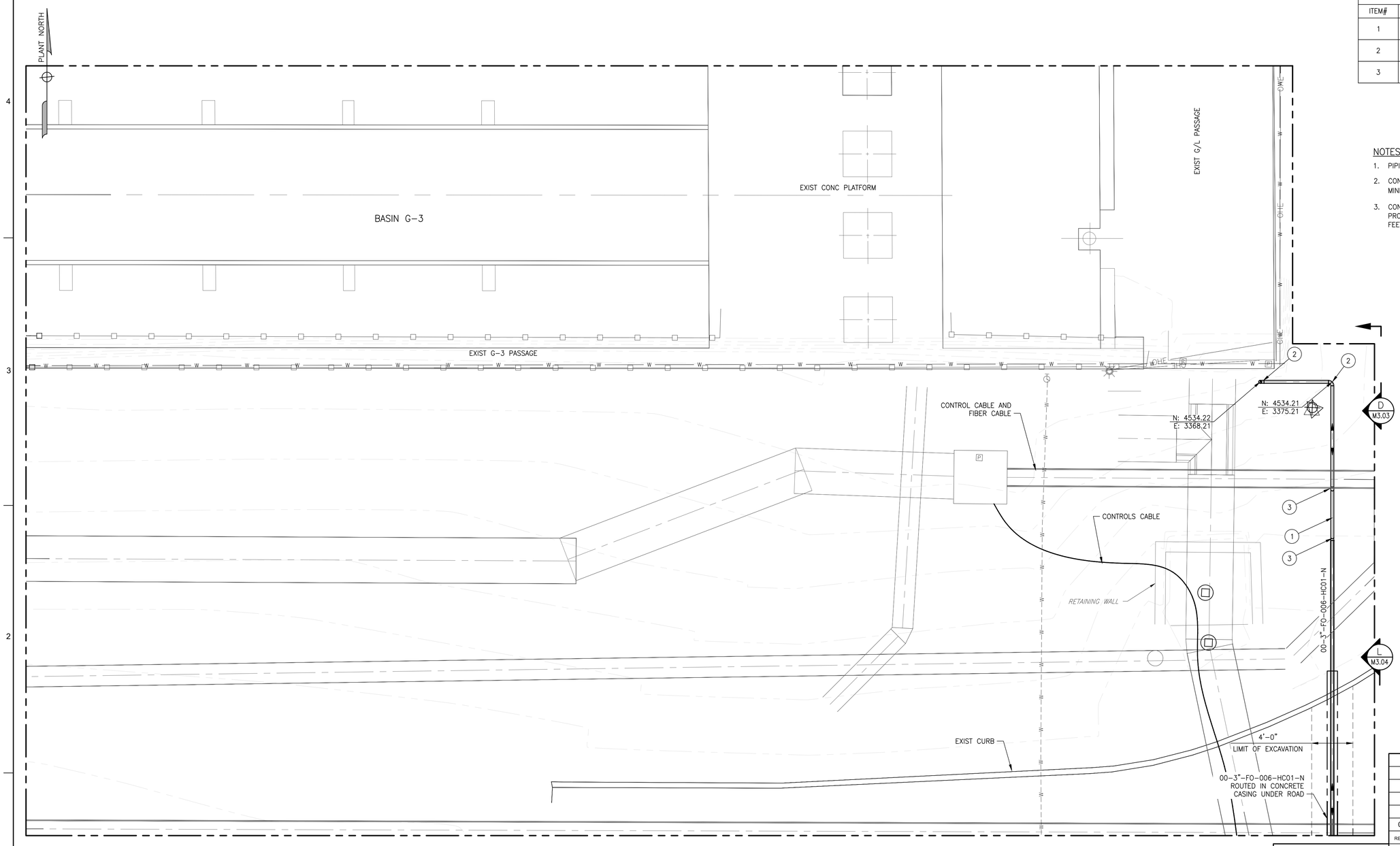

MATCHLINE DWG M2.13

UNDERGROUND PIPING PLAN

SCALE: 1" = 5'

0 5' 10'

SCALE: 1" = 5'

REV.	DATE	DESCRIPTION	BY
0	03/11/2026	ISSUED FOR BID	LEK

STATE OF LOUISIANA
LAURA LYMAN KELLY
License No. 39645
PROFESSIONAL ENGINEER
IN
MECHANICAL ENGINEERING
3/11/2026

WSP USA INC.
ONE PENN PLAZA, 4TH FLOOR
NEW YORK, NY 10119
CERTIFICATE OF REGISTRATION # EF.0000023

Infinity Engineering Consultants, LLC
FIRM No: LA – EF. 0003709
Civil | Structural | Mechanical | Electrical | Marine | Transportation
Metairie, LA www.infinityec.com 504-304-0548

SEWERAGE AND WATER BOARD OF NEW ORLEANS

CONTRACT No. 1444

WEST POWER COMPLEX @ CWPT
FUEL OIL DELIVERY SYSTEM

MECHANICAL

UNDERGROUND PIPING PLAN

DATE	03/11/2026
JOB NO.	22-017
DESIGNED BY:	L. KELLY
FILE NAME:	M2.01 UNDERGROUND PIPING PLAN.dwg
DR:	R. SCHOUEST
CK:	L. KELLY
AP:	L. KELLY
LAST EDIT:	
SCALE:	AS NOTED
DATE:	03/11/2026
A/E DWG NO.	M2.12
DWG. No.	12196-W-24
SET NO:	SHEET NO: 21 OF 72

BID PACKAGE - NOT FOR CONSTRUCTION

MATCHLINE DWG M2.12

PLANT NORTH

HAMILTON SUBSTATION, MACHINE SHOP 1, MACHINE SHOP 2, CHEMICAL HOUSE 1, CHEMICAL HOUSE 2, (NOTES 3,4)

4'-0" LIMIT OF EXCAVATION

N: 4490.23
E: 3375.21

00-3"-FO-006-HC01-N ROUTED IN CONCRETE CASING UNDER ROAD

ELECTRICAL MANHOLE UNDERNEATH ASPHALT

EXIST CURB

00-3"-FO-006-HC01-N

M M3.04

L M3.04

N: 4477.55
E: 3375.21

N: 4477.52
E: 3416.37

HAMILTON SUBSTATION, WAREHOUSE FEEDER FROM SYCAMORE

GRATE INLET TOP=2.87'

CATCH BASIN TOP=0.20'

00-3"-FO-006-HC01-N

GRATE INLET
TOP=-0.70'
INV.=-4.02'
INV.=-3.88'

EXIST FENCE

EXIST POLE (SEE NOTE 5)

OHE

EXIST FENCE

N: 4409.14
E: 3416.35

SODIUM HYPOCHLORITE FEED BUILDING

SODIUM HYPOCHLORITE STORAGE/FEED FACILITY

T-5

T-6

ABOVEGROUND STORAGE TANK

MATCHLINE DWG M2.14

UNDERGROUND PIPING PLAN

SCALE: 1" = 5'

0 5' 10'

SCALE: 1" = 5'

LEGEND		
ITEM#	DESCRIPTION	NPD(IN)
1	PIPE, SCH STD, CS, BE, ASTM A53 GR. B, ASME B36.10M	3
2	90° ELBOW, SCH STD, CS, BE, ASTM A234 GR. WPB, ASME B16.9	3

NOTES:

1. PIPING SHALL MEET PIPE SPECIFICATIONS NOTED HC01 AND YHD.
2. CONTRACTOR TO VERIFY FINAL GRADE. UNDERGROUND PIPING TO BE MINIMUM 3'-6" BELOW FINAL GRADE UNLESS NOTED OTHERWISE.
3. CONTRACTOR SHALL PROVIDE ONE (1) WEEK ADVANCE NOTICE OF PROPOSED POWER OUTAGE REQUESTS IF CROSSING OR WITHIN 10 FEET OF EXISTING ELECTRICAL DUCT BANK. SEE GENERAL NOTES.
4. CONTRACTOR SHALL PROVIDE TEMPORARY POWER TO HAMILTON SUBSTATION DURING REQUESTED POWER OUTAGE.
5. EXISTING POLE INCLUDES CONDUIT THAT TRANSITIONS UNDERGROUND. CONTRACTOR SHALL EXPOSE AND PROTECT CONDUIT DURING INSTALLATION OF FUEL OIL LINE IN VICINITY OF POLE.

REV.	DATE	DESCRIPTION	BY
0	03/11/2026	ISSUED FOR BID	LEK

STATE OF LOUISIANA
LAURA LEMAN KELLY
License No. 39645
PROFESSIONAL ENGINEER
IN
MECHANICAL ENGINEERING
3/11/2026

WSP USA INC.
ONE PENN PLAZA, 9TH FLOOR,
NEW YORK, NY 10119
CERTIFICATE OF REGISTRATION # EF.2000923

FIRM No LA - EF. 0003109
Infinity Engineering Consultants, LLC
Civil | Structural | Mechanical | Electrical | Marine | Transportation
Metairie, LA www.infinityec.com 504-304-0548

DATE	03/11/2026
JOB NO.	22-017
DESIGNED BY:	L. KELLY
FILE NAME:	M2.01 UNDERGROUND PIPING PLAN.dwg

SEWERAGE AND WATER BOARD OF NEW ORLEANS

CONTRACT No. 1444

WEST POWER COMPLEX @ CWPT
FUEL OIL DELIVERY SYSTEM

MECHANICAL

UNDERGROUND PIPING PLAN

DR:	R. SCHOUEST
CK:	L. KELLY
AP:	L. KELLY
LAST EDIT:	
SCALE:	AS NOTED
DATE:	03/11/2026

A/E DWG NO. M2.13

DWG. No. 12196-W-24

SET NO: SHEET NO: 22 OF 72

BID PACKAGE - NOT FOR CONSTRUCTION

MATCHLINE DWG M2.13

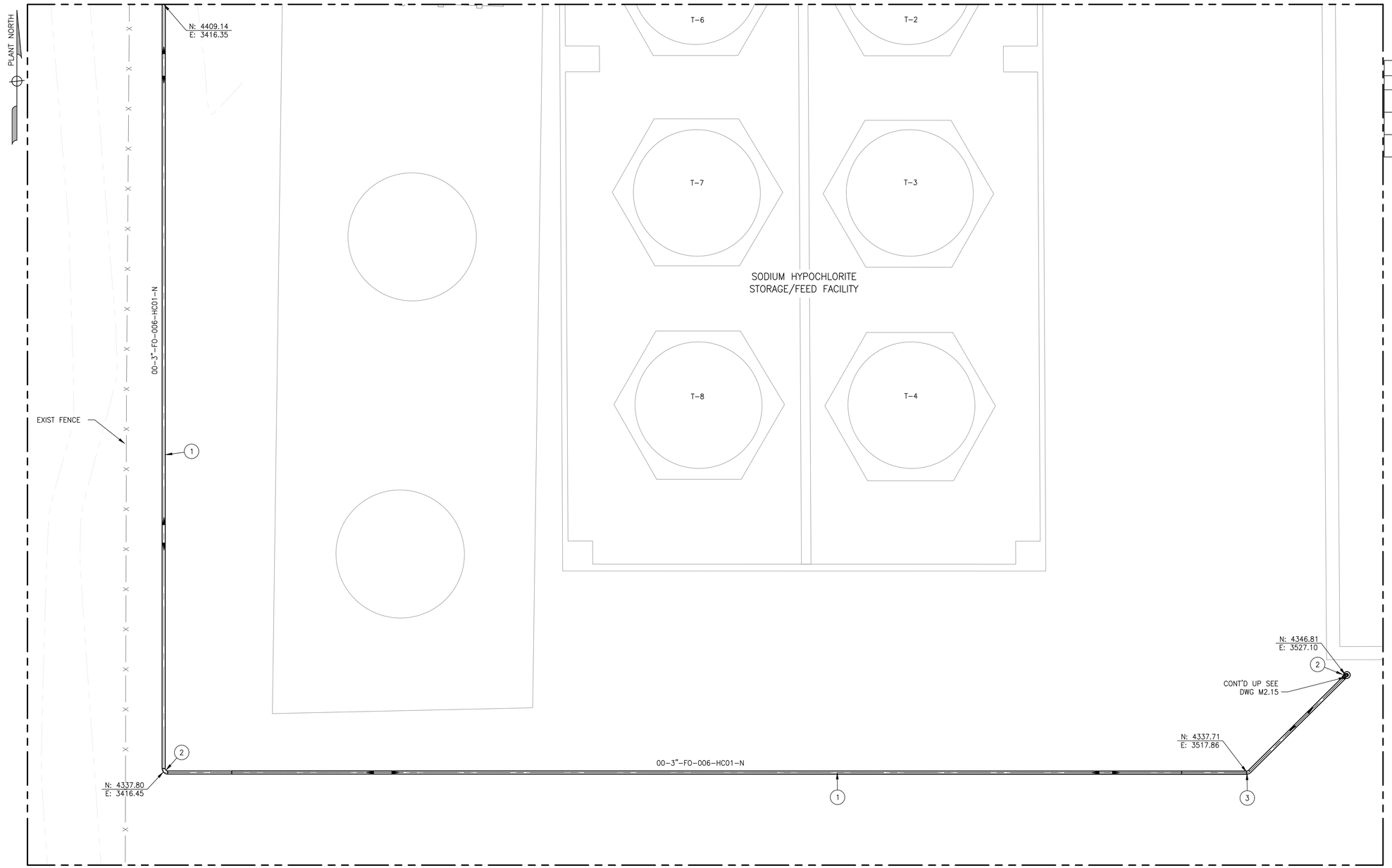

LEGEND		
ITEM#	DESCRIPTION	NPD(IN)
1	PIPE, SCH STD, CS, BE, ASTM A53 GR. B, ASME B36.10M	3
2	90° ELBOW, SCH STD, CS, BE, ASTM A234 GR. WPB, ASME B16.9	3
3	45° ELBOW, SCH STD, CS, BE, ASTM A234 GR. WPB, ASME B16.9	3

NOTES:

1. PIPING SHALL MEET PIPE SPECIFICATIONS NOTED HC01 AND YHD.
2. CONTRACTOR TO VERIFY FINAL GRADE. UNDERGROUND PIPING TO BE MINIMUM 3'-6" BELOW FINAL GRADE UNLESS NOTED OTHERWISE.
3. CONTRACTOR SHALL PROVIDE ONE (1) WEEK ADVANCE NOTICE OF PROPOSED POWER OUTAGE REQUESTS IF CROSSING OR WITHIN 10 FEET OF EXISTING ELECTRICAL DUCT BANK. SEE GENERAL NOTES.

MATCHLINE DWG M2.15

UNDERGROUND PIPING PLAN

SCALE: 1" = 5'

0 5' 10'

SCALE: 1" = 5'

REV.	DATE	DESCRIPTION	BY
0	03/11/2026	ISSUED FOR BID	LEK

STATE OF LOUISIANA
LESLIE E. KELLY
License No. 39645
PROFESSIONAL ENGINEER
IN
MECHANICAL ENGINEERING
3/11/2026

wsp
WSP USA INC.
ONE PENN PLAZA, 4TH FLOOR,
NEW YORK, NY 10119
CERTIFICATE OF REGISTRATION # EF.2000923

Infinity Engineering Consultants, LLC
FIRM No LA – EF. 0003109
Civil | Structural | Mechanical | Electrical | Marine | Transportation
Metairie, LA www.infinityec.com 504-304-0548

SEWERAGE AND WATER BOARD OF NEW ORLEANS

CONTRACT No. 1444

WEST POWER COMPLEX @ CWPT
FUEL OIL DELIVERY SYSTEM

MECHANICAL

UNDERGROUND PIPING PLAN

DR.	R. SCHOUEST
CK:	L. KELLY
AP:	L. KELLY
LAST EDIT:	
SCALE:	AS NOTED
DATE:	03/11/2026

A/E DWG NO. M2.14

DWG. No. 12196-W-24

SET NO: SHEET NO: 23 OF 72

DATE	03/11/2026	JOB NO.	22-017

DESIGNED BY: L. KELLY

FILE NAME: M2.01 UNDERGROUND PIPING PLAN.dwg

BID PACKAGE - NOT FOR CONSTRUCTION

PLANT NORTH

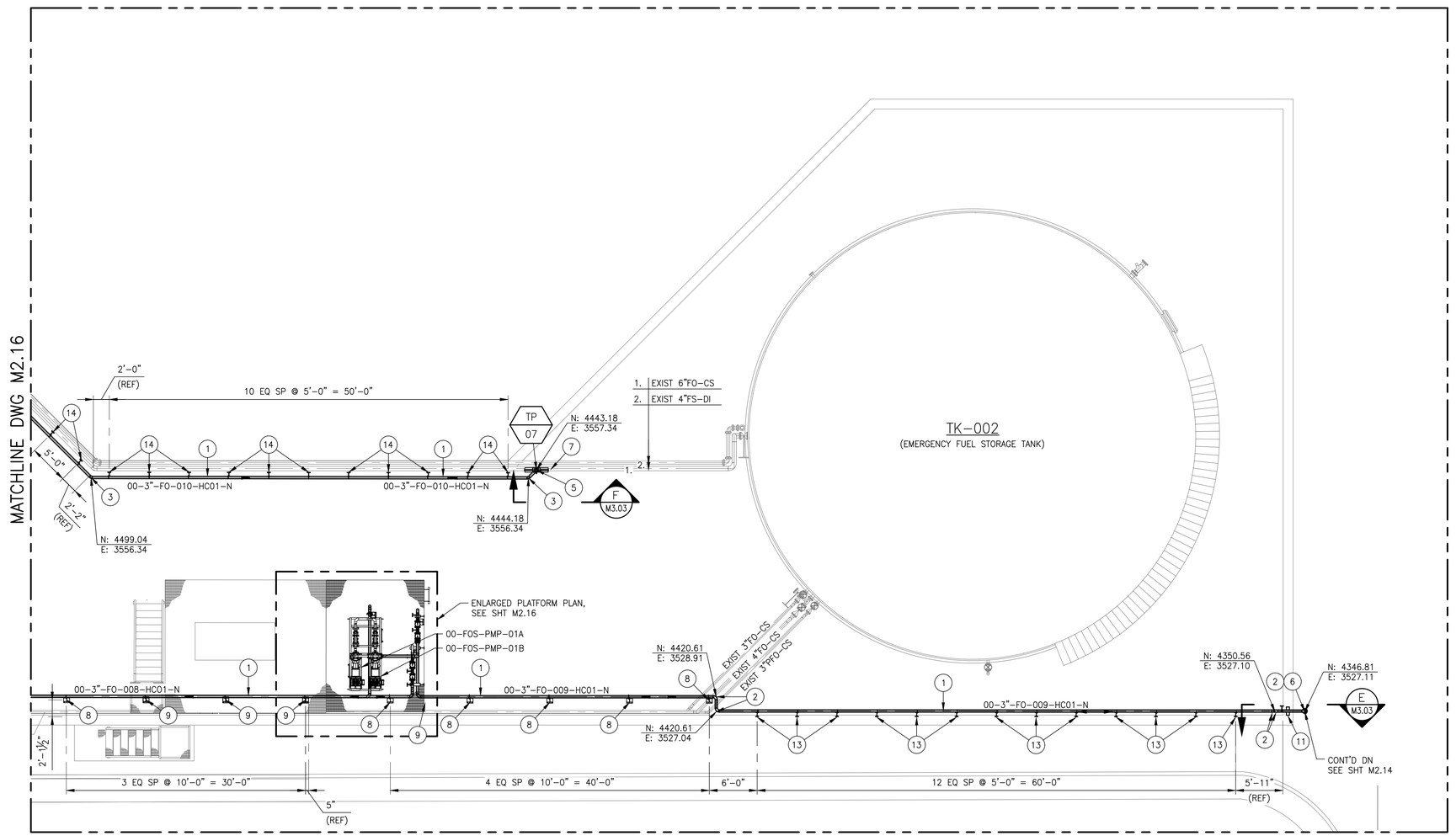

MATCHLINE DWG M2.14

LEGEND		
ITEM#	DESCRIPTION	NPD(IN)
1	PIPE, SCH STD, CS, BE, ASTM A53 Gr. B, ASME B36.10M	3
2	90° ELBOW, SCH STD, CS, BE, ASTM A234 GR. WPB, ASME B16.9	3
3	45° ELBOW, SCH STD, CS, BE, ASTM A234 GR. WPB, ASME B16.9	3
4	TEE, SCH STD, CS, BE, ASTM A234 GR. WPB, ASME B16.9	3
5	REDUCING TEE, SCH STD, CS, BE, ASTM A234 GR. WPB, ASME B16.9	6x3
6	FLANGE WN, 150# RF, CS, ASTM A105, ASME B16.5	3
7	VALVE, BALL, 150# RF, CARBON STEEL	3
8	PS-1, SEE DET ON SHT M5.00	
9	PS-2, SEE DET ON SHT M5.00	
10	PS-3, SEE DET ON SHT M5.00	
11	PS-4, SEE DET ON SHT M5.00	
12	PS-5A, SEE DET ON SHT M5.00	
13	PS-5B, SEE DET ON SHT M5.00	
14	PS-5C, SEE DET ON SHT M5.00	

NOTE:

1. PIPING SHALL MEET PIPE SPECIFICATIONS NOTED HC01 AND YHD.

FUEL STORAGE CONTAINMENT PIPING PLAN

SCALE: 1" = 8'

0 8' 16'

SCALE: 1" = 8'

BID PACKAGE - NOT FOR CONSTRUCTION

REV.	DATE	DESCRIPTION	BY
0	03/11/2026	ISSUED FOR BID	LEK

LADRA EYMAN KELLY
License No. 39645
PROFESSIONAL ENGINEER
IN
MECHANICAL ENGINEERING
3/11/2026

SEWERAGE AND WATER BOARD OF NEW ORLEANS

CONTRACT No. 1444

WEST POWER COMPLEX @ CWPT
FUEL OIL DELIVERY SYSTEM

MECHANICAL
FUEL STORAGE CONTAINMENT PIPING PLAN

WSP USA INC.
ONE PENN PLAZA, 7TH FLOOR,
NEW YORK, NY 10119
CERTIFICATE OF REGISTRATION # EF.0000023

Infinity Engineering Consultants, LLC
FIRM No LA – EF. 0003709
AEC Project No. 22-017
Civil | Structural | Mechanical | Electrical | Marine | Transportation
Metairie, LA www.infinityec.com 504-304-0548

DR.	R. SCHOUEST
CK:	L. KELLY
AP:	L. KELLY
LAST EDIT:	
SCALE:	AS NOTED
DATE:	03/11/2026

A/E DWG NO. M2.15

DWG. No. 12196-W-24

SET NO: SHEET NO: 24 OF 72

DATE	03/11/2026	JOB NO.	22-017

DESIGNED BY: L. KELLY

FILE NAME: M2.15 FUEL STORAGE CONTAINMENT PIPING PLAN.dwg

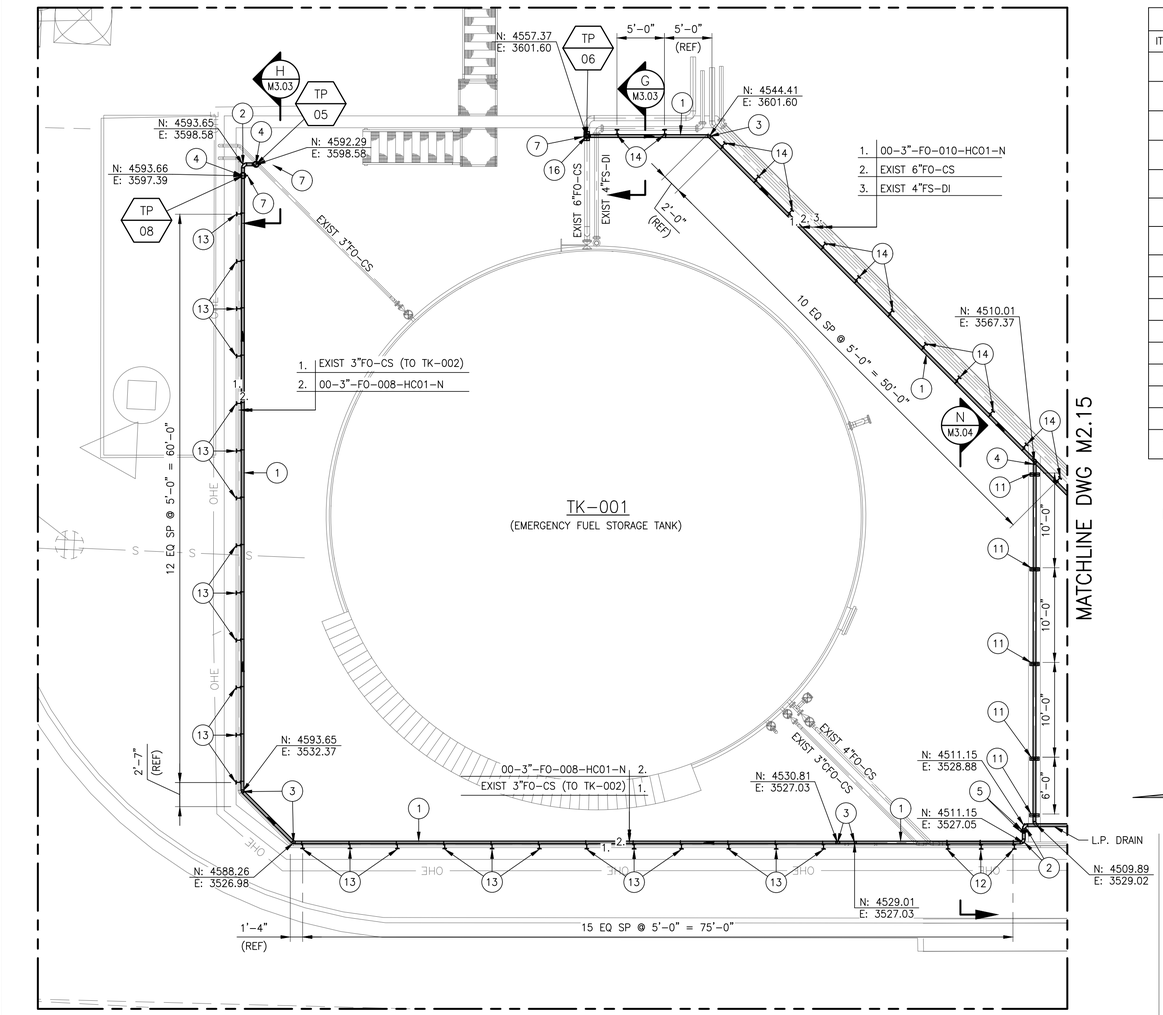

FUEL STORAGE CONTAINMENT PIPING PLAN

SCALE: 1" = 8'

0 8' 16'

SCALE: 1" = 8'

LEGEND		
ITEM#	DESCRIPTION	NPD(IN)
1	PIPE, SCH STD, CS, BE, ASTM A53 Gr. B, ASME B36.10M	3
2	90° ELBOW, SCH STD, CS, BE, ASTM A234 GR. WPB, ASME B16.9	3
3	45° ELBOW, SCH STD, CS, BE, ASTM A234 GR. WPB, ASME B16.9	3
4	TEE, SCH STD, CS, BE, ASTM A234 GR. WPB, ASME B16.9	3
5	FLANGE WN, 150# RF, CS, ASTM A105, ASME B16.5	3
6	VALVE, CHECK, 150# RF, CARBON STEEL	3
7	VALVE, BALL, 150# RF, CARBON STEEL	3
8	PS-1, SEE DET ON SHT M5.00	
9	PS-2, SEE DET ON SHT M5.00	
10	PS-3A, SEE DET ON SHT M5.00	
11	PS-4, SEE DET ON SHT M5.00	
12	PS-5A, SEE DET ON SHT M5.00	
13	PS-5B, SEE DET ON SHT M5.00	
14	PS-5C, SEE DET ON SHT M5.00	
15	PS-3B, SEE DET ON SHT M5.00	
16	REDUCING TEE, SCH STD, CS, BE, ASTM A234 GR. WPB, ASME B16.9	6x3

NOTE:

1. CONTRACTOR SHALL COORDINATE SKID SUPPLY AND DISCHARGE FLANGES WITH FO PIPE CONNECTIONS.
2. PIPING SHALL MEET PIPE SPECIFICATIONS NOTED HC01 AND YHD.
3. FOR NEW PLATFORM EXTENSION SEE SHEET S03-07-01.

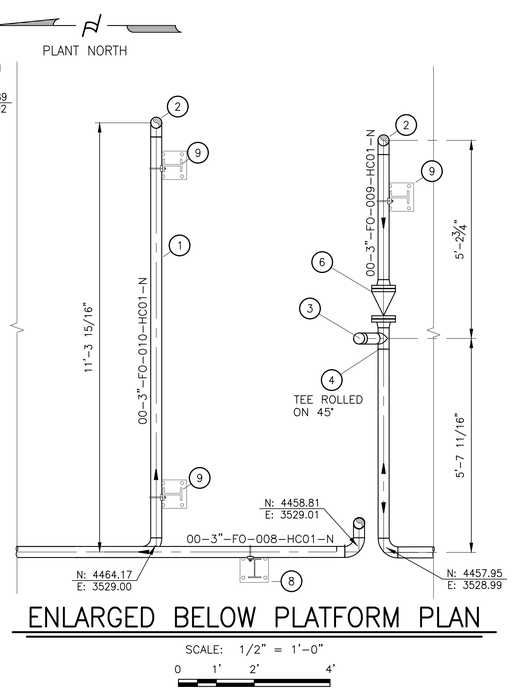

ENLARGED BELOW PLATFORM PLAN

SCALE: 1/2" = 1'-0"

0 1' 2' 4'

SCALE: 1/2" = 1'-0"

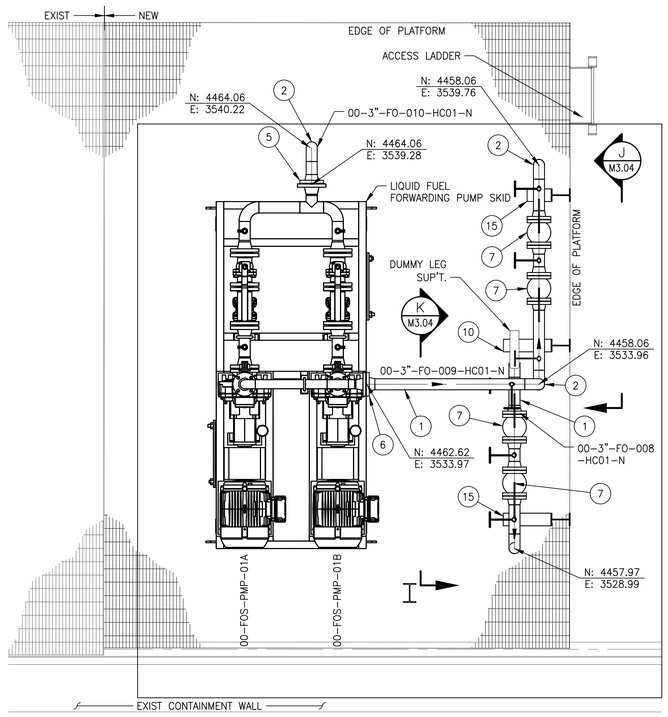

ENLARGED ABOVE PLATFORM PLAN

SCALE: 1/2" = 1'-0"

0 1' 2' 4'

SCALE: 1/2" = 1'-0"

REV.	DATE	DESCRIPTION	BY
0	01/22/2026	ISSUED FOR BID	LEK

SEWERAGE AND WATER BOARD OF NEW ORLEANS

CONTRACT No. 1444

WEST POWER COMPLEX @ CWPT
FUEL OIL DELIVERY SYSTEM

MECHANICAL
FUEL STORAGE CONTAINMENT PIPING PLAN

STATE OF LOUISIANA
LAURA EYMAN KELLY
License No. 59645
PROFESSIONAL ENGINEER
IN
MECHANICAL ENGINEERING
3/11/2026

WSP USA Inc.
ONE PENN PLAZA, 11TH FLOOR,
NEW YORK, NY 10119
CERTIFICATE OF REGISTRATION # EF.0000023

FIRM No: LA – EF. 0003109
Infinity Engineering Consultants, LLC
Civil | Structural | Mechanical | Electrical | Marine | Transportation
Metairie, LA www.infinityec.com 504-304-0148

DR.	R. SCHOUEST	A/E DWG NO.
CK:	L. KELLY	M2.16
AP:	L. KELLY	
LAST EDIT:		DWG. No. 12196-W-24
SCALE:	AS NOTED	
DATE:	03/11/2026	SET NO: SHEET NO: 25 OF 72

DATE	03/11/2026	JOB NO.	22-017

DESIGNED BY: L. KELLY

FILE NAME: M2.15 FUEL STORAGE CONTAINMENT PIPING PLAN.dwg

BID PACKAGE - NOT FOR CONSTRUCTION

NOTES:

1. CONTRACTOR SHALL EXCAVATE CAREFULLY IN THE AREA OF KNOWN CONDUITS AND DUCT BANK TO AVOID DAMAGE. IF CONDUITS OR DUCT BANK ARE DAMAGED DURING CONSTRUCTION, CONTRACTOR SHALL REPAIR.
2. CONDUITS ARE ABANDONED IN PLACE. IF ENCOUNTERED AND IN CONFLICT WITH CONSTRUCTION, THEY CAN BE REMOVED.

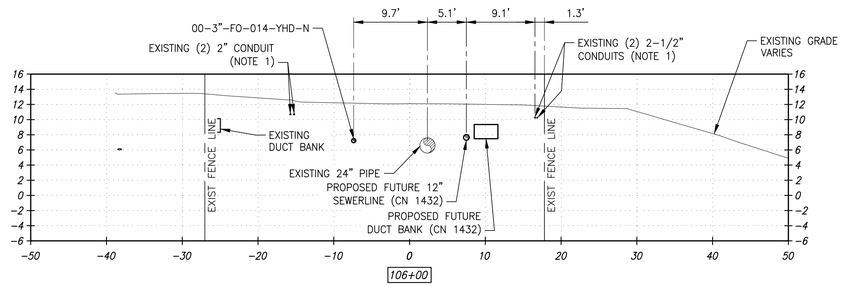

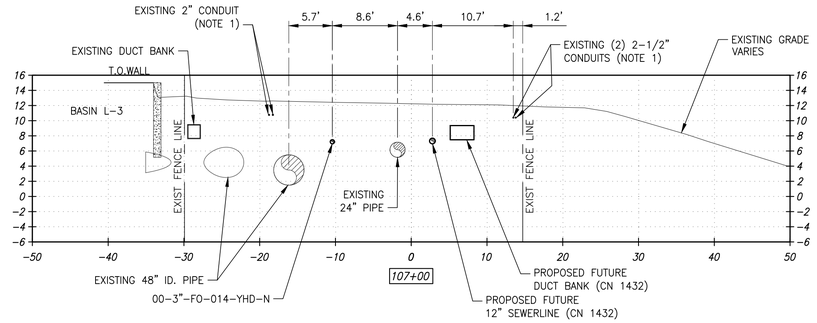

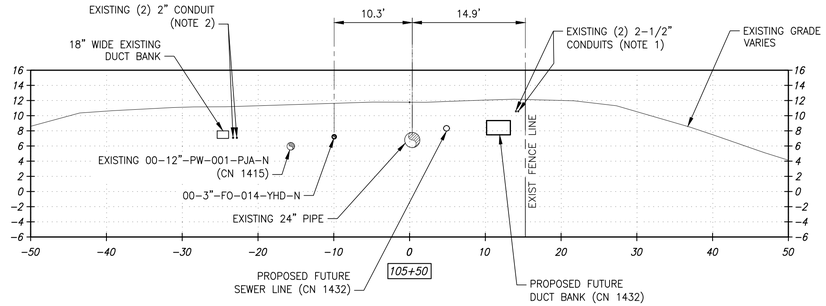

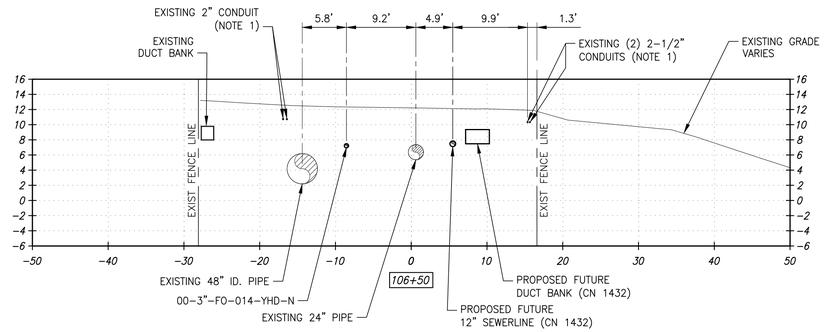

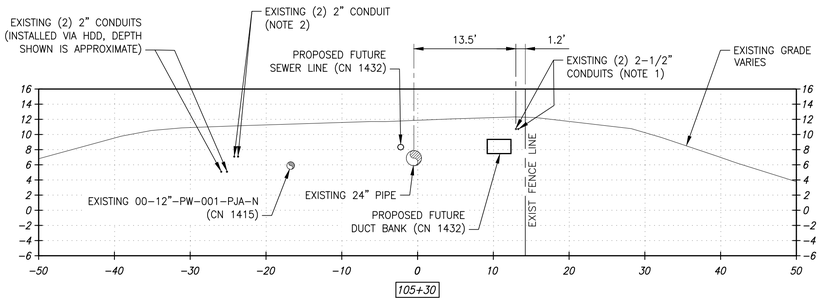

0 10' 20'
SCALE: 1" = 10'

REV.	DATE	DESCRIPTION	BY
0	03/11/2026	ISSUED FOR BID	LEK

STATE OF LOUISIANA
LAURA LYMAN KELLY
License No. 39645
PROFESSIONAL ENGINEER
IN
MECHANICAL ENGINEERING
3/11/2026

WSP USA Inc.
ONE PENN PLAZA, 47TH FLOOR,
NEW YORK, NEW YORK 10119
CERTIFICATE OF REGISTRATION # EF.0000623

FIRM No: LA – EF. 0003709
Infinity Engineering Consultants, LLC
Civil | Structural | Mechanical | Electrical | Marine | Transportation
Metairie, LA www.infinityec.com 504-304-0548

DATE	03/11/2026	JOB NO.	22-017

DESIGNED BY: L KELLY
FILE NAME: CROSS SECTIONS.dwg

SEWERAGE AND WATER BOARD OF NEW ORLEANS

CONTRACT No. 1444
WEST POWER COMPLEX @ CWPT
FUEL OIL DELIVERY SYSTEM

MECHANICAL

CROSS SECTIONS

DR:	Q. VU
CK:	L. KELLY
AP:	L. KELLY
LAST EDIT:	
SCALE:	AS NOTED
DATE:	03/11/2026

A/E DWG NO.
M3.00

DWG. No. 12196-W-24

SET NO: SHEET NO: 26 OF 72

BID PACKAGE - NOT FOR CONSTRUCTION

NOTES:

1. CONTRACTOR SHALL EXCAVATE CAREFULLY IN THE AREA OF KNOWN CONDUITS AND DUCT BANK TO AVOID DAMAGE. IF CONDUITS OR DUCT BANK ARE DAMAGED DURING CONSTRUCTION, CONTRACTOR SHALL REPAIR.

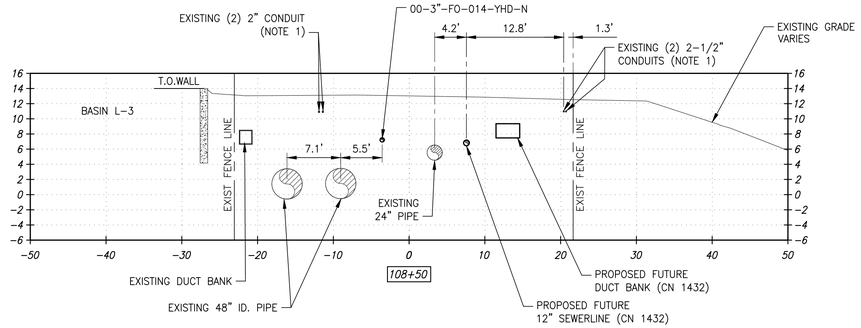

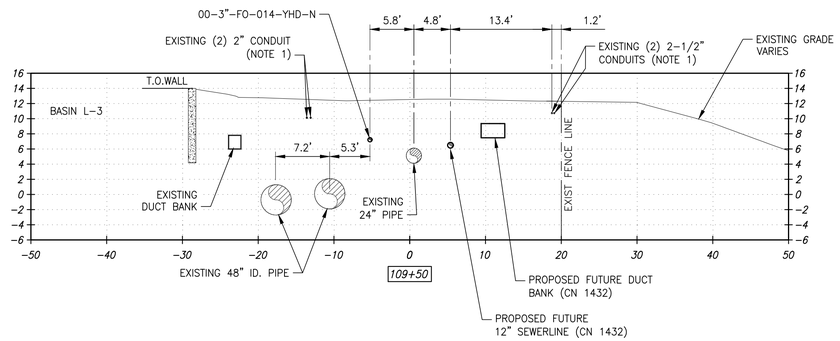

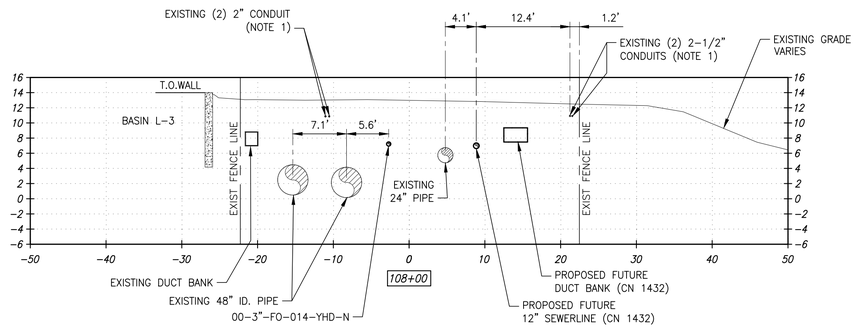

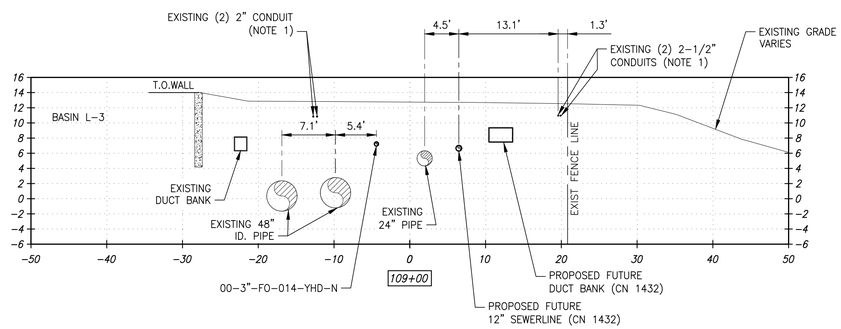

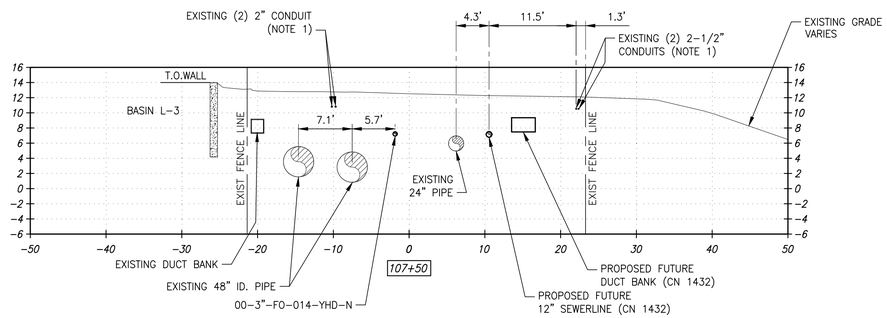

0 10' 20'
SCALE: 1" = 10'

REV.	DATE	DESCRIPTION	BY
0	03/11/2026	ISSUED FOR BID	LEK

STATE OF LOUISIANA
LAURA EYMAN KELLY
License No. 39645
PROFESSIONAL ENGINEER
IN
MECHANICAL ENGINEERING
3/11/2026

WSP USA Inc.
ONE PENN PLAZA, 4TH FLOOR,
NEW YORK, NY 10119
CERTIFICATE OF REGISTRATION # EF.2000023

FIRM No: LA – EF. 0003709
Infinity Engineering Consultants, LLC
Civil | Structural | Mechanical | Electrical | Marine | Transportation
Metairie, LA www.infinityec.com 504-304-0548

DATE	03/11/2026	JOB NO.	22-017

DESIGNED BY: L KELLY
FILE NAME: CROSS SECTIONS.dwg

SEWERAGE AND WATER BOARD OF NEW ORLEANS

CONTRACT No. 1444
WEST POWER COMPLEX @ CWPT
FUEL OIL DELIVERY SYSTEM

MECHANICAL

CROSS SECTIONS

DR:	Q. VU
CK:	L. KELLY
AP:	L. KELLY
LAST EDIT:	
SCALE:	AS NOTED
DATE:	03/11/2026

A/E DWG NO.
M3.01

DWG. No. 12196-W-24

SET NO: SHEET NO: 27 OF 72

BID PACKAGE - NOT FOR CONSTRUCTION

NOTES:

1. CONTRACTOR SHALL EXCAVATE CAREFULLY IN THE AREA OF KNOWN CONDUITS AND DUCT BANK TO AVOID DAMAGE. IF CONDUITS OR DUCT BANK ARE DAMAGED DURING CONSTRUCTION, CONTRACTOR SHALL REPAIR.

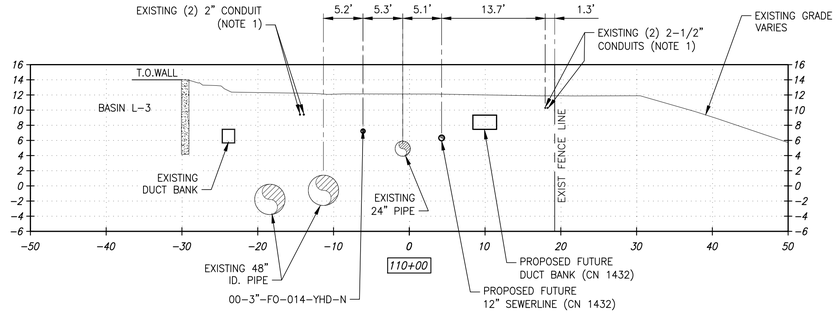

0 10' 20'
SCALE: 1" = 10'

REV.	DATE	DESCRIPTION	BY
0	03/11/2026	ISSUED FOR BID	LEK

STATE OF LOUISIANA
LAURA EYMAN KELLY
License No. 39645
PROFESSIONAL ENGINEER
IN
MECHANICAL ENGINEERING
3/11/2026

WSP USA Inc.
ONE PENN PLAZA, 4TH FLOOR,
NEW YORK, NY 10119
CERTIFICATE OF REGISTRATION # EF.2000023

FIRM No: LA – EF. 0003709
Infinity Engineering Consultants, LLC
Civil | Structural | Mechanical | Electrical | Marine | Transportation
Metairie, LA www.infinityec.com 504-304-0548

DATE	03/11/2026	JOB NO.	22-017

DESIGNED BY: L KELLY
FILE NAME: CROSS SECTIONS.dwg

SEWERAGE AND WATER BOARD OF NEW ORLEANS

CONTRACT No. 1444
WEST POWER COMPLEX @ CWPT
FUEL OIL DELIVERY SYSTEM

MECHANICAL

CROSS SECTIONS

DR:	Q. VU
CK:	L. WEST
AP:	L. KELLY
LAST EDIT:	
SCALE:	AS NOTED
DATE:	03/11/2026

A/E DWG NO.
M3.02

DWG. No. 12196-W-24

SET NO: SHEET NO: 28 OF 72

BID PACKAGE - NOT FOR CONSTRUCTION

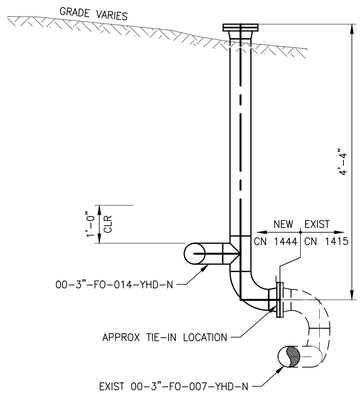

SECTION A M2.01
SCALE: 1/2" = 1'-0"

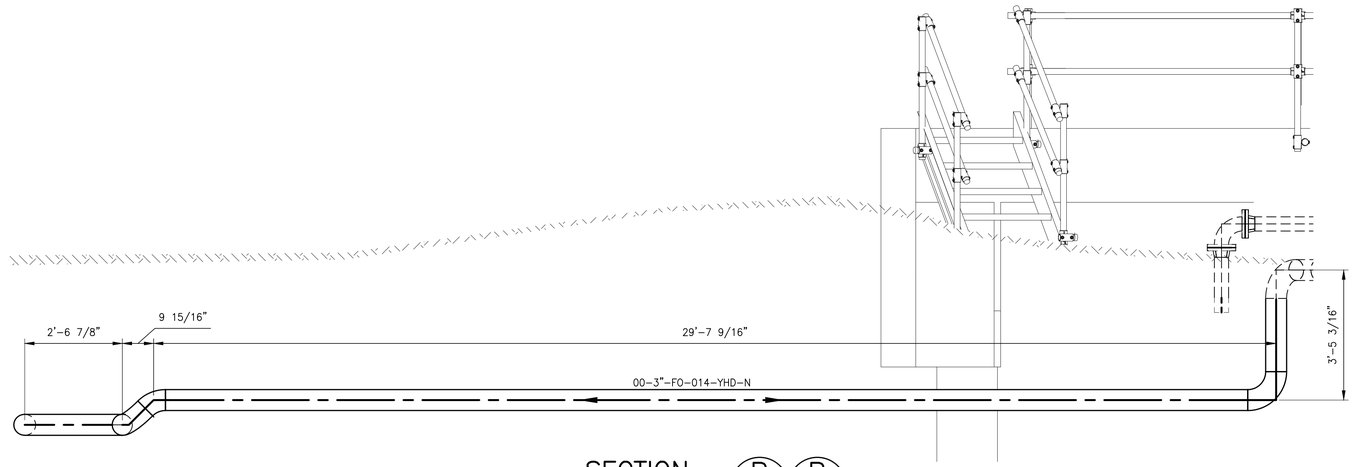

SECTION B B M2.06 M2.07
SCALE: 1/2" = 1'-0"

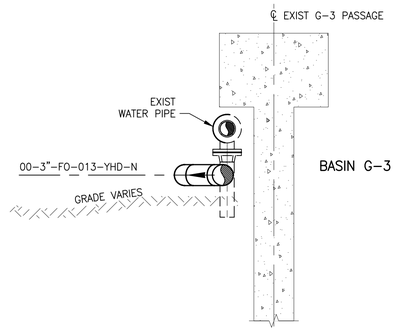

SECTION C C M2.06 M2.07
SCALE: 1/2" = 1'-0"

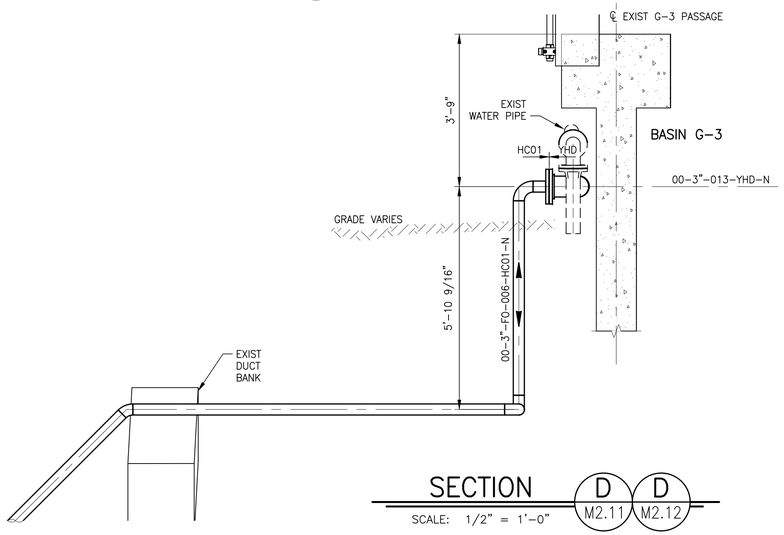

SECTION D D M2.11 M2.12
SCALE: 1/2" = 1'-0"

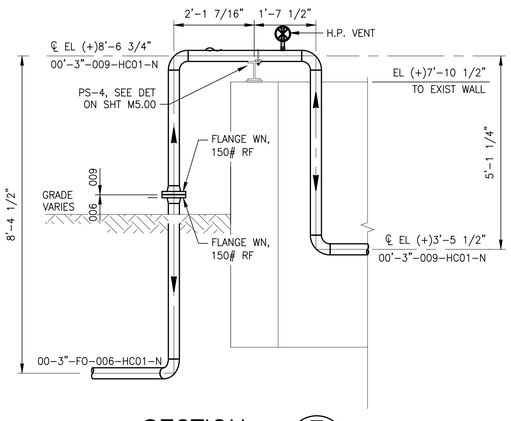

SECTION E M2.15
SCALE: 1/2" = 1'-0"

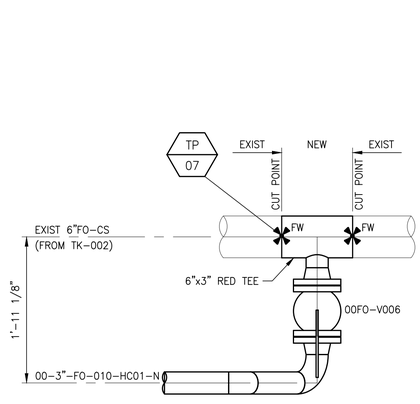

SECTION F M2.15
SCALE: 1" = 1'-0"

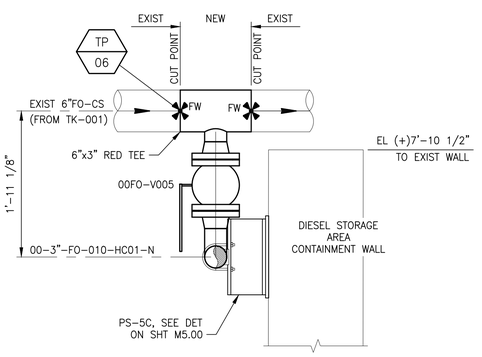

SECTION G M2.16
SCALE: 1" = 1'-0"

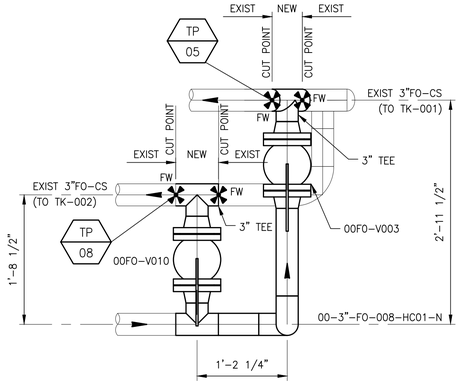

SECTION H M2.16
SCALE: 1" = 1'-0"

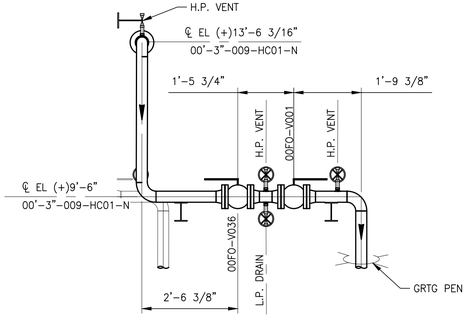

SECTION J M2.16
SCALE: 1/2" = 1'-0"

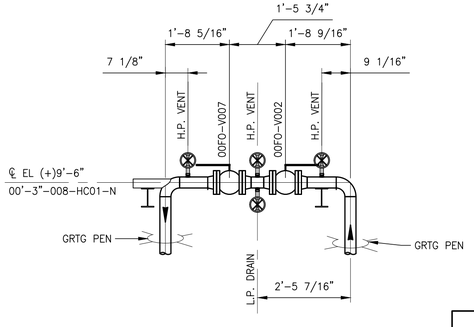

SECTION K M2.16
SCALE: 1/2" = 1'-0"

REV.	DATE	DESCRIPTION	BY
0	03/11/2026	ISSUED FOR BID	LEK

WSP USA INC.
ONE PENN PLAZA, 55TH FLOOR,
NEW YORK, NY 10119
CERTIFICATE OF REGISTRATION # EF.0000623

Infinity Engineering Consultants, LLC
FIRM No: LA – EF. 0003709
Civil | Structural | Mechanical | Electrical | Marine | Transportation
Metairie, LA www.infinityec.com 504-304-0548

DATE 03/11/2026 JOB NO. 22-017
DESIGNED BY: L. KELLY
FILE NAME: PIPING SECTIONS Sheet 1.dwg

STATE OF LOUISIANA
LAURA LYMAN KELLY
License No. 39645
PROFESSIONAL ENGINEER
IN
MECHANICAL ENGINEERING
3/11/2026

SEWERAGE AND WATER BOARD OF NEW ORLEANS

CONTRACT No. 1444
WEST POWER COMPLEX @ CWPT
FUEL OIL DELIVERY SYSTEM

MECHANICAL

PIPING SECTIONS

DR:	T. O'QUINN
CK:	L. KELLY
AP:	L. KELLY
LAST EDIT:	
SCALE:	AS NOTED
DATE:	03/11/2026

A/E DWG NO. M3.03

DWG. No. 12196-W-24

SET NO: SHEET NO: 29 OF 72

BID PACKAGE - NOT FOR CONSTRUCTION

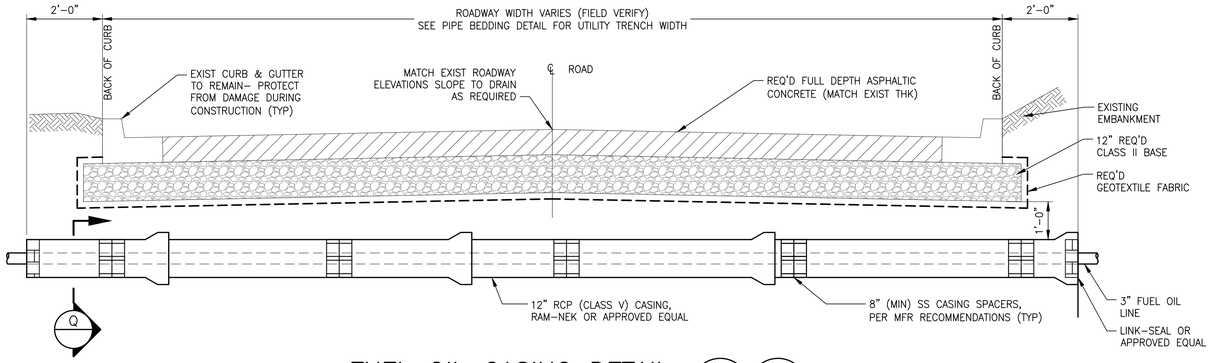

FUEL OIL CASING DETAIL (L / M2.12, M2.13)

SCALE: 1/2" = 1'-0"

ROADWAY NOTES:

1. AFTER BACKFILLING OVER CARRIER PIPE, CONTRACTOR SHALL PLACE AND INSTALL TEMPORARY AGGREGATE SURFACING FOR A MINIMUM OF TWO (2) MONTHS. TEMPORARY AGGREGATE SHALL BE COMPACTED TO LEAST 3" ABOVE FINAL ROADWAY ELEVATION.
2. COMPLETELY REMOVE TEMPORARY AGGREGATE SURFACE TO REQUIRED SUBGRADE ELEVATION AS REQUIRED.

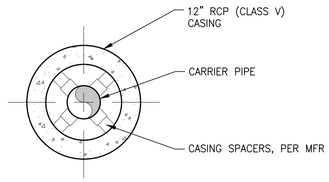

SECTION (Q / M3.04)

SCALE: 1-1/2" = 1'-0"

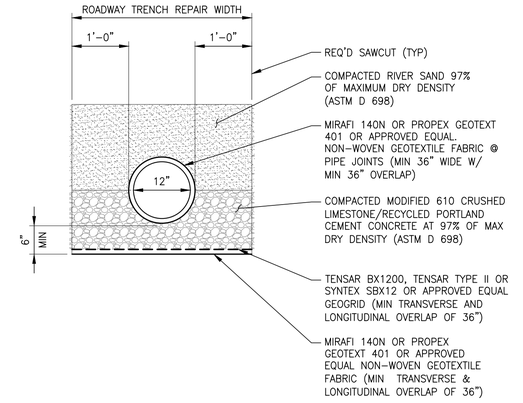

TYPICAL CARRIER PIPE BEDDING DETAIL

SCALE: 3/4" = 1'-0"

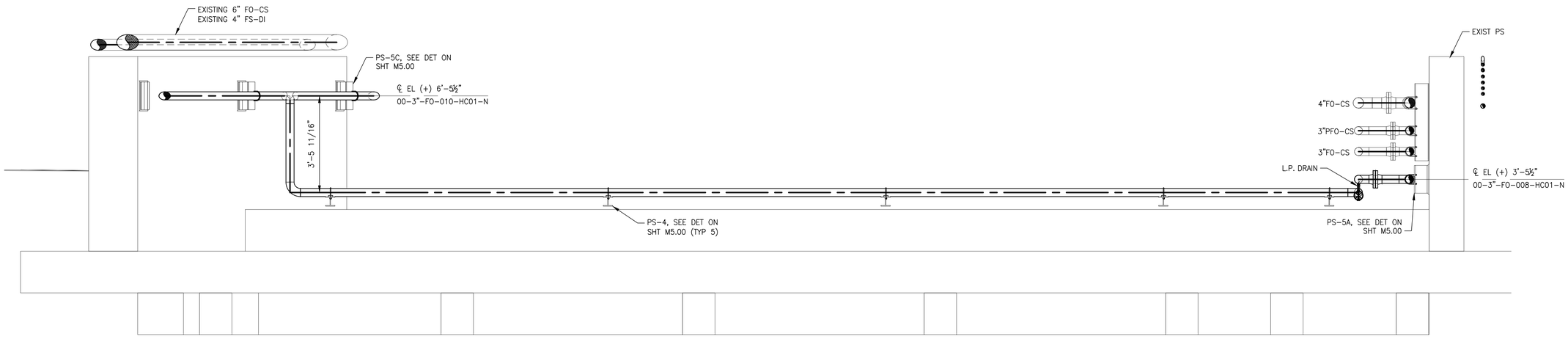

SECTION (N / M2.16)

SCALE: 1/2" = 1'-0"

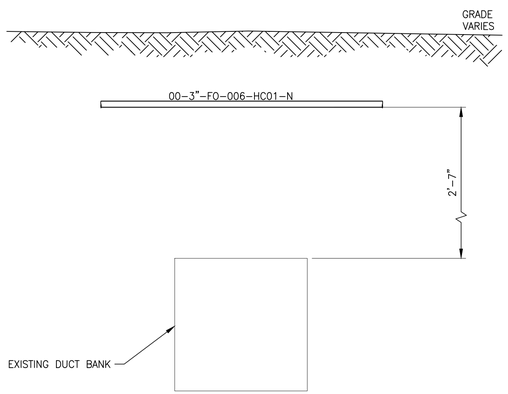

SECTION (M / M2.13)

SCALE: 1/4" = 1'-0"

THERMAL EXPANSION LOOP NOTES:

1. SPACERS SHALL NOT BE PROVIDED IN ELBOWS AND VERTICAL SECTIONS OF THERMAL EXPANSION LOOP.

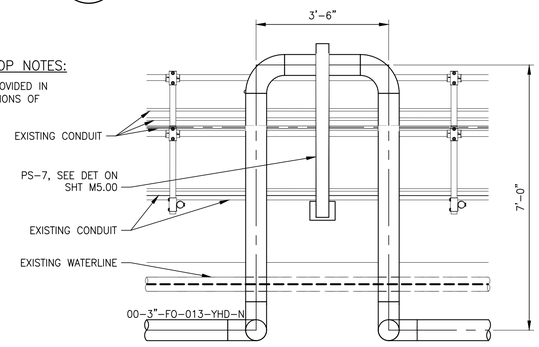

SECTION (P / M2.09)

SCALE: 1/2" = 1'-0"

REV.	DATE	DESCRIPTION	BY
0	03/11/2026	ISSUED FOR BID	LEK

STATE OF LOUISIANA — LAURA EYMAN KELLY — License No. 39645 — PROFESSIONAL ENGINEER IN MECHANICAL ENGINEERING — 3/11/2026

WSP USA INC. ONE PENN PLAZA, 4TH FLOOR, NEW YORK, NY 10119 — CERTIFICATE OF AUTHORIZATION # EF.0000623

Infinity Engineering Consultants, LLC — FIRM No: LA – EF. 0003709 — Civil | Structural | Mechanical | Electrical | Marine | Transportation — Metairie, LA — www.infinityec.com — 504-304-0548

DATE 03/11/2026 — JOB NO. 22-017

DESIGNED BY: L. KELLY

FILE NAME: M2.18 PIPING SECTIONS.dwg

SEWERAGE AND WATER BOARD OF NEW ORLEANS

CONTRACT No. 1444

WEST POWER COMPLEX @ CWPT
FUEL OIL DELIVERY SYSTEM

MECHANICAL

PIPING SECTIONS

DR:	R. SCHOUEST
CK:	L. WEST
AP:	L. KELLY
LAST EDIT:	
SCALE:	AS NOTED
DATE:	03/11/2026

A/E DWG NO. M3.04

DWG. No. 12196-W-24

SET NO: SHEET NO: 30 OF 72

BID PACKAGE - NOT FOR CONSTRUCTION



LOOKING NORTH

TP-05 LOCATION SECTION

SCALE: N.T.S.

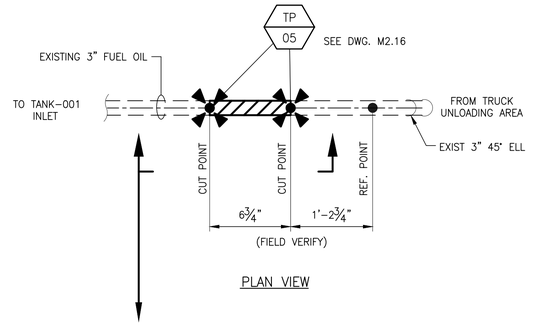

PLAN VIEW

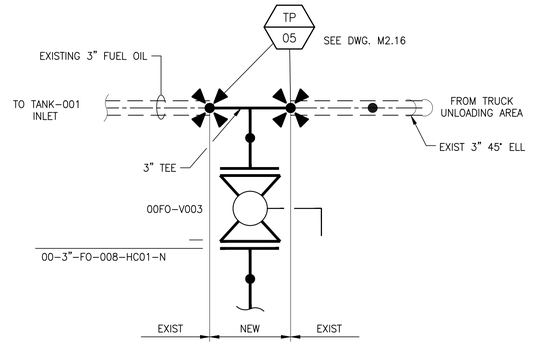

NEW INSTALL

LEGEND:

DEMO HATCH AREA

REV.	DATE	DESCRIPTION	BY
0	03/11/2026	ISSUED FOR BID	LEK

SEWERAGE AND WATER BOARD OF NEW ORLEANS

CONTRACT No. 1444

WEST POWER COMPLEX @ CWPT
FUEL OIL DELIVERY SYSTEM

MECHANICAL

TP-05 LOCATION PLAN & DETAILS

STATE OF LOUISIANA
LESLIE LYNN KELLY
License No. 39645
PROFESSIONAL ENGINEER
IN
MECHANICAL ENGINEERING
3/11/2026

WSP USA INC.
ONE PENN PLAZA, 5TH FLOOR,
NEW YORK, NY 10119
CERTIFICATE OF REGISTRATION # EF.2000623

FIRM No LA – EF. 0003109
Infinity Engineering Consultants, LLC
IEC Project No. 22-017
Civil | Structural | Mechanical | Electrical | Marine | Transportation
Metairie, LA www.infinityec.com 504-304-6548

DATE	03/11/2026	JOB NO.	22-017
DESIGNED BY: L. KELLY			
FILE NAME: M4.00 TP-05 LOCATION PLAN & DETAILS.dwg			

DR.	R. SCHOUEST
CK:	L. KELLY
AP:	L. KELLY
LAST EDIT:	
SCALE:	AS NOTED
DATE:	03/11/2026

A/E DWG NO.
M4.00

DWG. No. 12196-W-24

SET NO: SHEET NO: 31 OF 72

BID PACKAGE - NOT FOR CONSTRUCTION



LOOKING SOUTH

TP–06 LOCATION SECTION

SCALE: N.T.S.

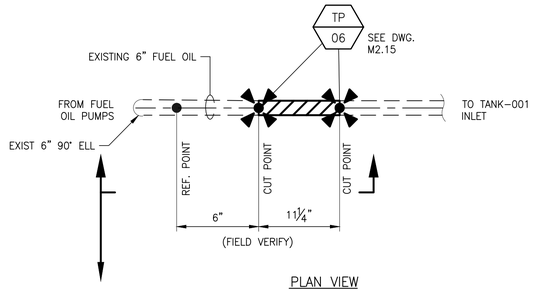

PLAN VIEW

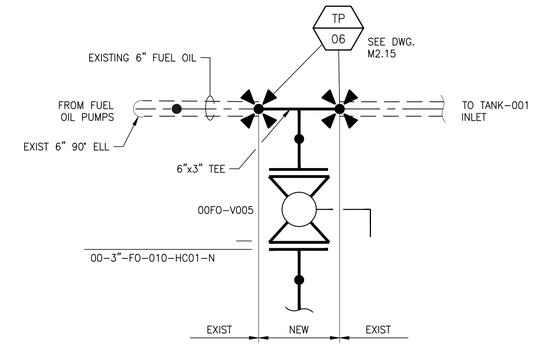

NEW INSTALL

LEGEND:

DEMO HATCH AREA

REV.	DATE	DESCRIPTION	BY
0	03/11/2026	ISSUED FOR BID	LEK

SEWERAGE AND WATER BOARD OF NEW ORLEANS

CONTRACT No. 1444

WEST POWER COMPLEX @ CWPT
FUEL OIL DELIVERY SYSTEM

MECHANICAL

TP-06 LOCATION PLAN & DETAILS

STATE OF LOUISIANA
LESLIE LYNN KELLY
License No. 39645
PROFESSIONAL ENGINEER
IN
MECHANICAL ENGINEERING
3/11/2026

WSP USA INC.
ONE PENN PLAZA, 5TH FLOOR,
NEW YORK, NY 10119
CERTIFICATE OF REGISTRATION # EF.0000623

FIRM No LA – EF. 0003109
Infinity Engineering Consultants, LLC
IEC Project No. 25-011
Civil | Structural | Mechanical | Electrical | Marine | Transportation
Metairie, LA www.infinityeci.com 504-304-6548

DR.	R. SCHOUEST	A/E DWG NO.	M4.01
CK:	L. KELLY		
AP:	L. KELLY		
LAST EDIT:		DWG. No. 12196-W-24	
SCALE:	AS NOTED		
DATE:	03/11/2026	SET NO:	SHEET NO: 32 OF 72

DATE	03/11/2026	JOB NO.	22-017

DESIGNED BY: L. KELLY

FILE NAME: M3.01 TP-06 LOCATION PLAN & DETAILS.dwg

BID PACKAGE - NOT FOR CONSTRUCTION



LOOKING SOUTH

TP-07 LOCATION SECTION

SCALE: N.T.S.

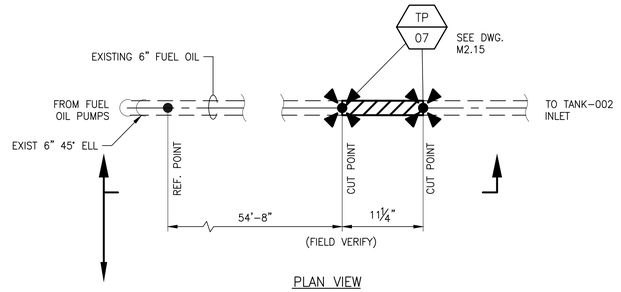

PLAN VIEW

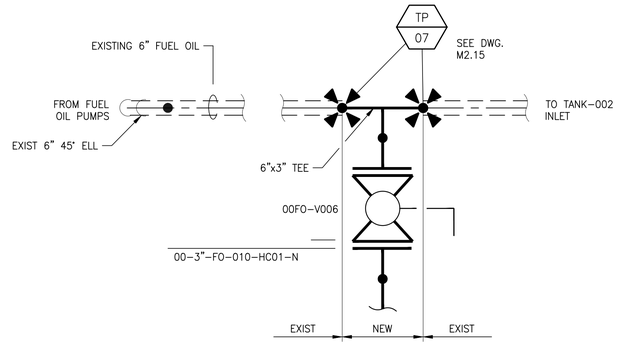

NEW INSTALL

LEGEND:

DEMO HATCH AREA

REV.	DATE	DESCRIPTION	BY
0	03/11/2026	ISSUED FOR BID	LEK

SEWERAGE AND WATER BOARD
OF NEW ORLEANS

CONTRACT No. 1444

WEST POWER COMPLEX @ CWPT
FUEL OIL DELIVERY SYSTEM

MECHANICAL

TP-07 LOCATION PLAN & DETAILS

STATE OF LOUISIANA
LESLIE LYNN KELLY
License No. 39645
PROFESSIONAL ENGINEER
IN
MECHANICAL ENGINEERING
3/11/2026

WSP USA INC.
ONE PENN PLAZA, 5TH FLOOR,
NEW YORK, NY 10119
CERTIFICATE OF REGISTRATION # EF.0000623

FIRM No LA – EF. 0003109
Infinity Engineering Consultants, LLC
IEC Project No. 22-017
Civil | Structural | Mechanical | Electrical | Marine | Transportation
Metairie, LA www.infinityec.com 504-304-6548

DR.	R. SCHOUEST
CK:	L. KELLY
AP:	L. KELLY
LAST EDIT:	
SCALE:	AS NOTED
DATE:	03/11/2026

A/E DWG NO.
M4.02

DWG. No. 12196-W-24

SET NO: SHEET NO: 33 OF 72

DATE	03/11/2026	JOB NO.	22-017

DESIGNED BY: L. KELLY

FILE NAME: M3.02 TP-07 LOCATION PLAN & DETAILS.dwg

BID PACKAGE - NOT FOR CONSTRUCTION



LOOKING NORTH

TP-08 LOCATION SECTION

SCALE: N.T.S.

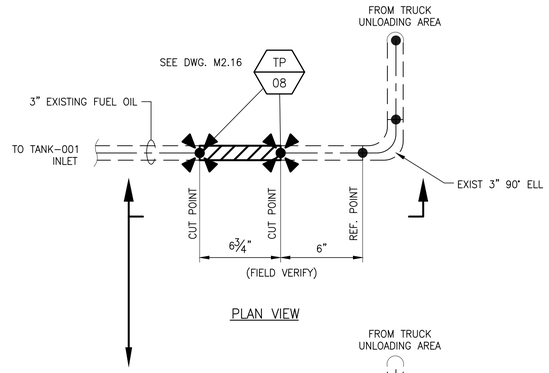

PLAN VIEW

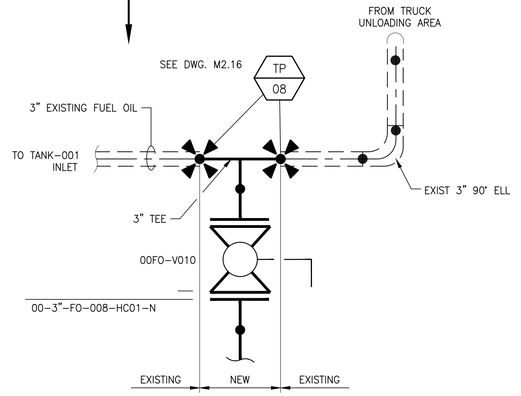

NEW INSTALL

LEGEND:

DEMO HATCH AREA

REV.	DATE	DESCRIPTION	BY
0	03/11/2026	ISSUED FOR BID	LEK

SEWERAGE AND WATER BOARD OF NEW ORLEANS

CONTRACT No. 1444

WEST POWER COMPLEX @ CWPT
FUEL OIL DELIVERY SYSTEM

MECHANICAL

TP-08 LOCATION PLAN & DETAILS

STATE OF LOUISIANA
LESLIE LYNNE KELLY
License No. 39645
PROFESSIONAL ENGINEER
IN
MECHANICAL ENGINEERING
3/11/2026

WSP USA Inc.
ONE PENN PLAZA, 5TH FLOOR,
NEW YORK, NY 10119
CERTIFICATE OF REGISTRATION # EF.0000623

FIRM No LA – EF. 0003109
Infinity Engineering Consultants, LLC
Civil | Structural | Mechanical | Electrical | Marine | Transportation
Metairie, LA www.infinityec.com 504-304-6548

DR.	R. SCHOUEST
CK:	L. KELLY
AP:	L. KELLY
LAST EDIT:	
SCALE:	AS NOTED
DATE:	03/11/2026

A/E DWG NO. M4.03

DWG. No. 12196-W-24

SHEET NO: 34 OF 72

DATE	03/11/2026	JOB NO.	22-017

DESIGNED BY: L. KELLY

FILE NAME: M3.03 TP-08 LOCATION PLAN & DETAILS.dwg

BID PACKAGE - NOT FOR CONSTRUCTION

NOTES:

1. ALL U-BOLTS TO BE FASTENED AT BEAM GUAGE LINE.
2. NUMBER AND LOCATION OF U-BOLTS ON PIPE SUPPORTS MAY VARY. FIELD VERIFY LOCATIONS AND ELEVATIONS BEFORE INSTALLATION.
3. ALL PIPE SUPPORTS WELDS SHALL BE FULL PENETRATION WELDS.
4. ALL PIPE SUPPORTS SHALL BE HOT DIP GALVANIZED AFTER FABRICATION, INCLUDING AFTER DRILLING BOLTS HOLES.

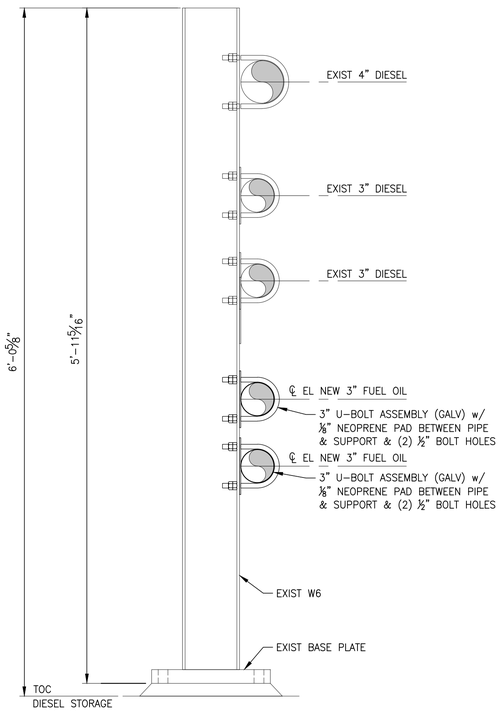

(6) LOCATIONS

PS-1

SCALE: 1-1/2" = 1'-0"

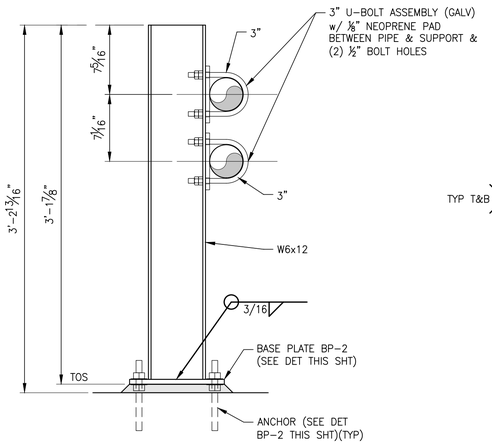

(7) LOCATIONS

PS-2

SCALE: 1-1/2" = 1'-0"

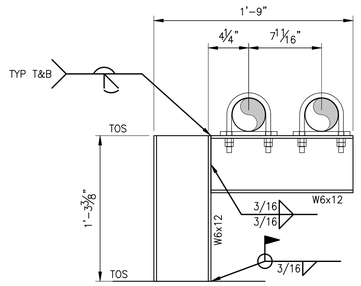

(1) LOCATIONS

PS-3A

SCALE: 1-1/2" = 1'-0"

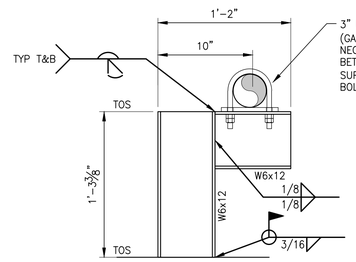

(2) LOCATIONS

PS-3B

SCALE: 1-1/2" = 1'-0"

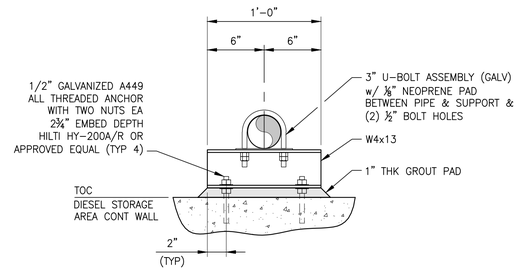

(5) LOCATIONS

PS-4

SCALE: 1-1/2" = 1'-0"

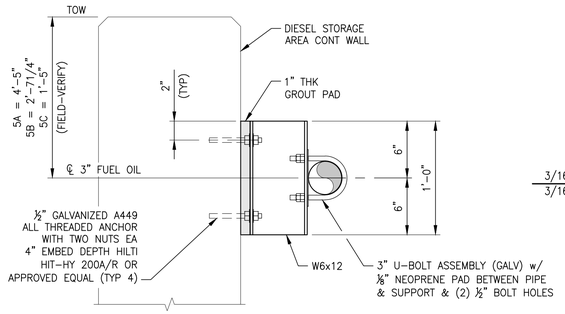

5A - (3) LOCATIONS
5B - (25) LOCATIONS
5C - (26) LOCATIONS

PS-5A/5B/5C

SCALE: 1-1/2" = 1'-0"

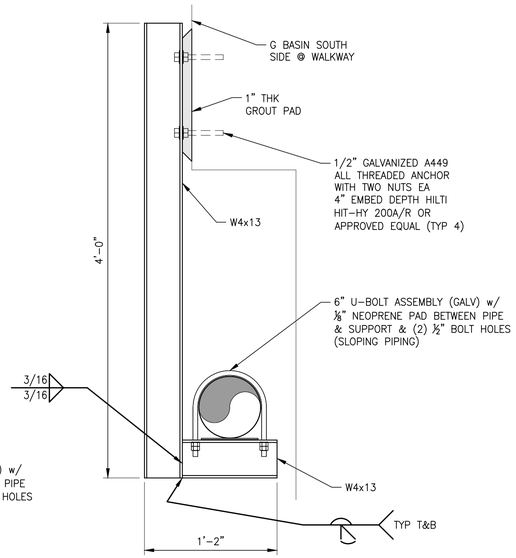

(28) LOCATIONS

PS-6

SCALE: 1-1/2" = 1'-0"

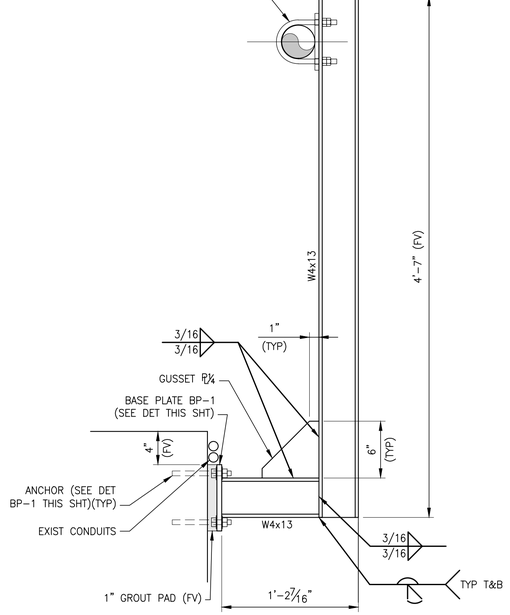

(1) LOCATION

PS-7

SCALE: 1-1/2" = 1'-0"

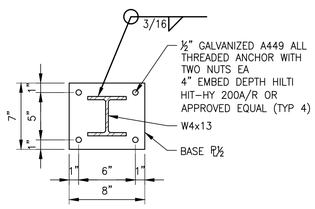

(1) REQ'D

BP-1

SCALE: 1-1/2" = 1'-0"

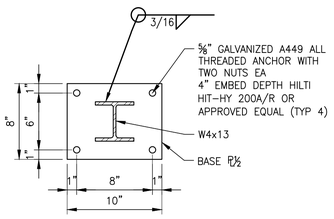

(7) REQ'D

BP-2

SCALE: 1-1/2" = 1'-0"

REV.	DATE	DESCRIPTION	BY
0	05/01/2026	ISSUED FOR BID	LEK

SEWERAGE AND WATER BOARD OF NEW ORLEANS

CONTRACT No. 1444

WEST POWER COMPLEX @ CWPT
FUEL OIL DELIVERY SYSTEM

MECHANICAL

PIPE SUPPORT DETAILS

LAURA EYMARD KELLY
STATE OF LOUISIANA
License No. 39645
PROFESSIONAL ENGINEER
IN
MECHANICAL ENGINEERING
5/1/2026

WSP USA INC.
ONE PENN PLAZA, 4TH FLOOR,
NEW YORK, NY 10119
CERTIFICATE OF RECOGNITION # EF.0000603

FIRM No: LA - EF. 0003109
Infinity Engineering Consultants, LLC
IDC Project No. 25-017
Civil | Structural | Mechanical | Electrical | Marine | Transportation
Metairie, LA | www.infinityec.com | 504-304-0548

DATE	05/01/2026	JOB NO.	22-017

DESIGNED BY: L. KELLY
FILE NAME: PIPE SUPPORT DETAILS.dwg

DR.	R. SCHOUEST
CK:	L. KELLY
AP:	L. KELLY
LAST EDIT:	
SCALE:	AS NOTED
DATE:	05/01/2026

A/E DWG NO.
M5.00

DWG. No. 12196-W-24

SET NO: SHEET NO: OF

BID PACKAGE - NOT FOR CONSTRUCTION

STRUCTURAL GENERAL NOTES

1. CONTRACTOR SHALL VERIFY ALL DIMENSIONS AND CONDITIONS WITH CONTRACT DRAWINGS AND WITH THE PHYSICAL CONDITIONS AT THE SITE, AND SHALL REPORT ALL DISCREPANCIES TO THE ENGINEER FOR RESOLUTION. THE CONTRACTOR SHALL NOT CONTINUE ANY WORK RELATING TO SUCH DISCREPANCIES WITHOUT ENGINEER APPROVAL. ALL FIELD REWORK OF IMPROPER FITUP SHALL BE AT THE CONTRACTORS EXPENSE.
2. CONTRACTOR SHALL MAKE EVERY REASONABLE EFFORT TO LOCATE ALL EXISTING UTILITIES AND EXERCISE CARE TO PROTECT THEM FROM DAMAGE DURING EXCAVATION AND CONSTRUCTION.
3. SITE VISITS BY THE ENGINEER WILL NOT INCLUDE INSPECTIONS. THE ENGINEER WILL NOT BE RESPONSIBLE FOR THE CONTRACTOR'S MEANS AND METHODS OF CONSTRUCTION, SEQUENCE OF CONSTRUCTION, OR SITE SAFETY PROGRAMS.
4. STRUCTURAL NOTES SHALL BE USED IN CONJUNCTION WITH THE SPECIFICATIONS. WHERE DIFFERENCES BETWEEN STRUCTURAL DRAWINGS, NOTES OR SPECIFICATIONS OCCUR, THE MOST STRINGENT REQUIREMENT SHALL GOVERN. IF DIFFERENCES OCCUR, THE CONTRACTOR SHALL REQUEST IMMEDIATE CLARIFICATION BEFORE PROCEEDING WITH THE WORK.
5. ALL DIMENSIONS ARE GIVEN IN FEET AND INCHES, UNLESS OTHERWISE NOTED.
6. WHERE REFERENCE IS MADE TO ASTM, AISC, ACI OR OTHER STANDARDS AND SPECIFICATIONS, THE LATEST ADOPTED EDITION IS INTENDED, UNLESS OTHERWISE NOTED.
7. STRUCTURES HAVE BEEN DESIGNED FOR OPERATIONAL LOADS ON THE COMPLETED STRUCTURE. CONTRACTOR SHALL TAKE ALL PRECAUTIONS NECESSARY TO PROTECT THE STRUCTURE DURING CONSTRUCTION, INCLUDING, BUT NOT LIMITED TO, BRACING, SHORING, AND LOAD BALANCING WHERE EXCESSIVE CONSTRUCTION LOADS MAY OCCUR.
8. CONTRACTOR SHALL PROVIDE ALL TEMPORARY SHORING AND BRACING REQUIRED FOR STABILITY UNTIL THE STRUCTURE IS COMPLETE.
9. OWNER OR OWNER'S AGENT, WILL EMPLOY AND PAY FOR THE SERVICES OF AN INDEPENDENT TESTING/INSPECTION COMPANY TO PERFORM SPECIAL INSPECTIONS AND TESTS IN ACCORDANCE WITH CHAPTER 17 OF THE INTERNATIONAL BUILDING CODE (IBC).
   A. SPECIAL INSPECTOR SHALL BE APPROVED BY THE OWNER, THE LOCAL BUILDING INSPECTION DEPARTMENT, AND BE ICC CERTIFIED FOR THE INSPECTIONS BEING PERFORMED.
   B. EMPLOYMENT OF THE INDEPENDENT TESTING/INSPECTION COMPANY AND INSPECTION SHALL IN NO WAY RELIEVE CONTRACTOR OF THEIR OBLIGATION TO PERFORM WORK IN ACCORDANCE WITH REQUIREMENTS OF CONTRACT DOCUMENTS.
   C. CONTRACTOR SHALL COORDINATE WITH THE INDEPENDENT TESTING/INSPECTION COMPANY TO FACILITATE THE EXECUTION OF ITS REQUIRED SERVICES.
   D. AFTER EACH INSPECTION AND TEST, THE INDEPENDENT TESTING/INSPECTION COMPANY SHALL PROMPTLY SUBMIT TWO COPIES OF LABORATORY REPORT TO THE ENGINEER, AND TWO COPIES TO THE OWNER.
   E. STRUCTURAL STEEL FABRICATION SHALL BE IN COMPLIANCE WITH AISC 360, CHAPTER N.
10. WHERE REQUIRED BY CHAPTER 17 OF THE INTERNATIONAL BUILDING CODE (IBC), THE OWNER WILL EMPLOY A STRUCTURAL ENGINEER TO PERFORM STRUCTURAL OBSERVATIONS AS DEFINED BY IBC CHAPTER 17:
    A. THE STRUCTURAL ENGINEER SHALL PROVIDE VISUAL OBSERVATION OF THE STRUCTURAL SYSTEM FOR GENERAL CONFORMANCE TO THE APPROVED PLANS AND SPECIFICATIONS, AT SIGNIFICANT CONSTRUCTION STAGES AND AT COMPLETION OF THE STRUCTURAL SYSTEM. STRUCTURAL OBSERVATION DOES NOT INCLUDE OR WAIVE THE RESPONSIBILITY FOR SPECIAL INSPECTIONS.
    B. THE STRUCTURAL ENGINEER SHALL REPORT ANY OBSERVED DEFICIENCIES TO THE OWNER, CONTRACTOR, AND BUILDING OFFICIAL, AND SHALL SUBMIT A FINAL SUMMARY REPORT STATING SITE VISITS HAVE BEEN COMPLETED, THAT ALL DEFICIENCIES HAVE BEEN RESOLVED, AND THAT THE STRUCTURAL SYSTEM ADEQUATELY CONFORMS TO THE APPROVED PLANS AND SPECIFICATIONS.

CONSTRUCTION LOADS

1. STRUCTURES HAVE BEEN DESIGNED FOR OPERATIONAL LOADS ON THE COMPLETED STRUCTURE. DURING CONSTRUCTION, CONTRACTOR SHALL PROTECT STRUCTURE BY BRACING AND BALANCING WHEREVER EXCESSIVE CONSTRUCTION LOADS MAY OCCUR.
2. CONTRACTOR SHALL PROVIDE ALL TEMPORARY SHORING AND BRACING NEEDED FOR STABILITY UNTIL STRUCTURE IS COMPLETE.

DESIGN LOADS: IBC 2021 EDITION

DEAD LOAD	
STRUCTURE, COMPONENTS, AND EQUIPMENT:	SELF-WEIGHT
ROOF/FLOOR SUPERIMPOSED DL (FOR CABLE TRAY, PIPING, DUCTWORK, LIGHTING AND FLAT ROOF):	50 PSF
LIVE LOAD	
GROUND FLOOR (STORAGE AREAS):	250 PSF
STAIRS:	100 PSF
PLATFORMS AND WALKWAYS:	100 PSF
ELEVATED CONCRETE FLOORS (ELECTRICAL ROOMS):	150 PSF
ELEVATED CONCRETE FLOORS (CONTROL ROOMS):	125 PSF
ELEVATED CONCRETE FLOORS (OFFICE SPACE):	100 PSF
ELEVATED STEEL GRATED PLATFORMS:	100 PSF
ROOF:	20 PSF
CONCENTRATED LOAD AT MID-SPAN BEAM GROUND FLOOR/STORAGE AREAS:	4500 LBS
UNLESS NOTED OTHERWISE:	2000 LFB
USE OF LIVE LOAD REDUCTION IN ACCORDANCE WITH IBC 2021 SECTION 1607.11 SHALL BE INDICATED FOR EACH TYPE OF LIVE LOAD USED IN THE DESIGN IF APPLICABLE.	
SNOW LOAD	
GROUND SNOW (Pg):	0 PSF
FLAT-ROOF SNOW LOAD (Pf):	0 PSF
EXPOSURE FACTOR (Ce):	1.0
THERMAL FACTOR (Ct):	1.0
IMPORTANCE FACTOR (Is):	1.2
WIND LOAD	
RISK CATEGORY:	IV
BASIC WIND SPEED (3-SECOND GUST) (OWNER MANDATED):	154 MPH
EXPOSURE CATEGORY:	C
PARTIALLY OPEN BUILDING	
TOPOGRAPHIC FACTOR (Kzt):	1.0
WIND DIRECTIONALITY FACTOR (Kd):	0.85
INTERNAL PRESSURE COEFFICIENT (GCpi):	±0.18
SEISMIC	
RISK CATEGORY:	IV
IMPORTANCE FACTOR (Ie):	1.5
SOIL SITE CLASS:	E
SHORT PERIOD MAPPED SPECTRAL RESPONSE (S_S):	0.086
LONG PERIOD MAPPED SPECTRAL RESPONSE (S_1):	0.053
SHORT PERIOD SITE COEFFICIENT (Fa)	2.4
LONG PERIOD SITE COEFFICIENT (Fv)	4.2
ADJUSTED SHORT PERIOD 5% DAMPED RESPONCE (Sms)	0.206
ADJUSTED LONG PERIOD 5% DAMPED RESPONCE (Sm1)	0.223
SHORT PERIOD SPECTRAL RESPONSE (SDS)	0.138
LONG PERIOD SPECTRAL RESPONCE (SD_1)	0.149
SEISMIC DESIGN CATEGORY:	D
ANALYSIS PROCEDURE USED: EQUIVALENT LATERAL FORCE METHOD DESIGN BASE SHEAR	TBD
BASIC SEISMIC FORCE RESISTING SYSTEM:	
FUEL FORWARDING PUMP PLATFORM:	
SEISMIC RESPONSE COEFFICIENT (C_S)	0.089
RESPONSE MODIFICATION FACTOR COEFFICIENT (R)	3.25
DESIGN BASE FLOOD ELEVATION	0.0 NAVD
FLOOD	
FLOOD HAZARD AREA	AE
RAIN	
BASIC 100-YEAR HOURLY RAINFALL	5.43
HURRICANE/TORNADO STORM SHELTER	10.75 IN/HR
100 YR HOURLY RAINFALL RATE	

GENERAL ABBREVIATIONS

AB = ANCHOR BOLT
BC = BOLT CIRCLE
BM = BEAM
BOS = BOTTOM OF STEEL
BP = BASE PLATE
CHKD = CHECKERED
CJ = CONTROL OR CONSTRUCTION JOINT
CL = CENTERLINE
CLR = CLEAR
CMU = CONCRETE MASONRY UNIT
COL = COLUMN
CONC = CONCRETE
CONN = CONNECTION
CONT = CONTINUOUS
DIA = DIAMETER
DBL = DOUBLE
DET = DETAIL
DWG = DRAWING
EA = EACH
EAE = ENGINEER APPROVED EQUAL
EF = EACH FACE
EJ = EXPANSION JOINT
EL = ELEVATION
EQ = EQUALLY
EW = EACH WAY
EX = EXISTING
EXT = EXTERIOR
FD = FLOOR DRAIN
FL = FLOOR ELEVATION
FS = FAR SIDE
GA = GAGE
GALV = GALVANIZED
GR = GRADE
HP = HIGH POINT
HSA = HEADED STUD ANCHOR
HORIZ = HORIZONTAL
INT = INTERIOR
INV = INVERT
JT = JOINT
KSF = KIPS PER SQUARE FOOT
LG = LONG
LLBB = LONG LEG BACK TO BACK
LLH = LONG LEG HORIZONTAL
LLV = LONG LEG VERTICAL
LP = LOW POINT
MAX = MAXIMUM
MIN = MINIMUM
MSL = MEAN SEA LEVEL
MTL = METAL
NS = NEAR SIDE
NTS = NOT TO SCALE
OC = ON CENTER
OPP = OPPOSITE
PLCS = PLACES
PL = PLATE
PROJ = PROJECTION
PSF = POUNDS PER SQUARE FOOT
QTY = QUANTITY
RAD = RADIUS
REF = REFERENCE
REQ'D = REQUIRED
SIM = SIMILAR
SLBB = SHORT LEG BACK TO BACK
SLV = SLEEVE
SP = SPACING
SPEC = SPECIFICATION
SS = STAINLESS STEEL
STD = STANDARD
T & B = TOP AND BOTTOM
THK = THICK
TOC = TOP OF CONCRETE
TOM = TOP OF MASONRY
TOS = TOP OF STEEL
TOW = TOP OF WALL
TS = TUBE STEEL
TYP = TYPICAL
UON = UNLESS OTHERWISE NOTED
VERT = VERTICAL
W/ = WITH
WF = WIDE FLANGE
WL = WORK LINE
WP = WORKING POINT

REV.	DATE	DESCRIPTION	BY
0	03/18/26	ISSUED FOR BID	DB

STATE OF LOUISIANA
DEAN A. BROOKINS
License No. 38750
PROFESSIONAL ENGINEER
CIVIL ENGINEERING
03/18/26

ENGINEER: DEAN BROOKINS
LICENSE #: 38750

WSP USA INC.
ONE PENN PLAZA, 10TH FLOOR
NEW YORK, NY 10119
CERTIFICATE OF REGISTRATION # EF.0009023

DATE	11/25/2025	JOB NO.	0247759

DESIGNED BY: D. BROOKINS
FILE NAME: S00-01.dwg

SEWERAGE AND WATER BOARD OF NEW ORLEANS

CONTRACT No. 1444
WEST POWER COMPLEX @ CWTP
FUEL OIL DELIVERY SYSTEM

STRUCTURAL
GENERAL NOTES

DR:	M. BESCHNETT
CK:	D. BROOKINS
AP:	D. BROOKINS
LAST EDIT:	
SCALE:	AS NOTED
DATE:	12/05/2025

A/E DWG NO. S00-01
DWG. No. 12196-W-24
SET NO:
SHEET NO: 36 OF 72

BID PACKAGE - NOT FOR CONSTRUCTION

3/18/2026 11:55:35 AM

GENERAL STRUCTURAL STEEL NOTES:

1. DESIGN, FABRICATION, AND ERECTION OF STRUCTURAL AND MISCELLANEOUS STEEL SHALL CONFORM TO THE AMERICAN INSTITUTE OF STEEL CONSTRUCTION (AISC) "SPECIFICATION FOR STRUCTURAL STEEL BUILDINGS" (AISC 360-16), "CODE OF STANDARD PRACTICE FOR STRUCTURAL STEEL BUILDINGS AND BRIDGES", (AISC 303-16), AND "SEISMIC PROVISIONS FOR STRUCTURAL STEEL BUILDINGS" (AISC 341-16).
2. STRUCTURAL STEEL SHALL CONFORM TO ASTM A992, GRADE 50, EXCEPT CHANNELS, ANGLES, AND PLATES SHALL CONFORM TO ASTM A36. HSS SHALL CONFORM TO ASTM A500, GRADE C. PIPE SHALL CONFORM TO ASTM A53, TYPE E OR S, GRADE B.
3. HIGH STRENGTH BOLTS SHALL BE ¾ " DIAMETER IN 13/16 " DIAMETER OPEN HOLES, UON. BOLTS SHALL CONFORM TO ASTM F3125, GRADE A325 OR A490, LATEST EDITIONS.
4. NUTS SHALL CONFORM TO ASTM A563, GRADE A AND WASHERS SHALL CONFORM TO ASTM F436, LATEST EDITIONS.
5. SHOP CONNECTIONS SHALL BE WELDED OR BOLTED. FIELD CONNECTIONS SHALL BE BOLTED, UON. ALL STRUCTURAL BOLTED CONNECTIONS SHALL BE MADE WITH HIGH-STRENGTH BOLTS.
6. HIGH STRENGTH BOLTED CONNECTIONS SHALL CONFORM TO THE REQUIREMENTS OF THE RESEARCH COUNCIL ON STRUCTURAL CONNECTIONS (RCSC) "SPECIFICATION FOR STRUCTURAL JOINTS USING HIGH-STRENGTH BOLTS."
7. ALL HIGH STRENGTH BOLTED CONNECTIONS SHALL BE DESIGNED AS BEARING-TYPE WITH THREADS INCLUDED (TYPE N), UON. BEARING TYPE CONNECTIONS SHALL BE INSTALLED SNUG TIGHT AS DEFINED BY AISC, UON.
8. CONNECTIONS FOR OVERSIZED HOLES AND BRACING CONNECTIONS SHALL BE SLIP CRITICAL, UON. SLIP CRITICAL CONNECTIONS SHALL HAVE A CLASS A FAYING SURFACE
9. PRETENSIONED OR SLIP-CRITICAL CONNECTIONS SHALL USE ONE OF THE FOLLOWING PRETENSIONING INSTALLATION METHODS:
   A. TURN-OF-THE-NUT
   B. CALIBRATED WRENCH
   C. TWIST-OFF-TYPE TENSION-CONTROL: BOLT SPLINE COMPLYING WITH ASTM F3125, GRADE F1852.
   D. DIRECT-TENSION-INDICATOR: DIRECT-TENSION-INDICATOR CONFORMING TO ASTM F959.
10. GUSSET PLATES, STIFFENER PLATES, AND CONNECTION ANGLES SHALL HAVE A THICKNESS OF NOT LESS THAN ⅜".
11. INCORRECTLY FABRICATED, DAMAGED, OR OTHERWISE MISFITTING OR NON-CONFORMING MATERIALS OR CONDITIONS SHALL BE REPORTED TO ENGINEER PRIOR TO REMEDIAL OR CORRECTIVE ACTION. ANY SUCH ACTION SHALL REQUIRE ENGINEER APPROVAL.
12. ALL CONNECTIONS SHALL BE DOUBLE ANGLE, FRAMED BEAM CONNECTIONS CONFORMING TO THE REQUIREMENTS OF PART 10 OF THE AISC STEEL CONSTRUCTION MANUAL, 16TH EDITION, UON.
13. ALL WELDING SHALL CONFORM TO THE AMERICAN WELDING SOCIETY (AWS) D1.1 "STRUCTURAL WELDING CODE - STEEL", LATEST EDITION. ALL WELDING ELECTRODES SHALL BE E70 SERIES.
14. FILLET WELD SIZES SHALL BE NOT LESS THAN 3/16", UON.
15. GRATING SHALL BE WELDED STEEL 1½ X 3/16 BEARING BARS AT 1 3/16 " ON CENTER, AND CROSS BARS AT 4" ON CENTER (MARK W-19-4 (1½ X 3/16) STEEL), UON. GRATING FOR EXTERIOR USE SHALL HAVE SERRATED BEARING BARS. GRATING SHALL BE HOT DIP GALVANIZED.
16. CHECKERED PLATE SHALL BE RAISED PATTERN TYPE, CONFORMING TO ASTM A786, LATEST EDITION; MINIMUM THICKNESS OF PLATE SHALL BE ¼ ".
17. ALL STRUCTURAL STEEL EXPOSED TO WEATHER SHALL BE HOT-DIPPED GALVANIZED AFTER FABRICATION AND AFTER ALL HOLES FOR CONNECTIONS ARE DRILLED, UON.
18. NO OPENINGS SHALL BE CUT IN STRUCTURAL MEMBERS UNLESS SHOWN ON THE DRAWINGS, OR APPROVED BY ENGINEER.
19. ALL BEARING PLATES SHALL BE SET WITH NON-SHRINK GROUT.
20. AFTER GROUT UNDER BASE/BEARING PLATES HAS CURED, AND PRIOR TO THE ADDITION OF ANY ADDITIONAL LOADS, ANCHOR BOLTS SHALL BE TIGHTENED TO THE "SNUG-TIGHT" POSITION, WITH A MANUAL OR IMPACT WRENCH.
21. CONTRACTOR SHALL PROVIDE ALL TEMPORARY BRACING REQUIRED TO MAINTAIN PLUMBNESS AND STABILITY DURING ERECTION. THIS BRACING SHALL NOT BE REMOVED UNTIL: ALL PERMANENT BRACING AND SHEAR WALLS HAVE BEEN INSTALLED; ALL WELDING HAS BEEN COMPLETED; ALL BOLTS HAVE BEEN PROPERLY TIGHTENED; SUPPORTING ROOF DECK HAS BEEN INSTALLED; CONCRETE FLOOR SLAB(S) HAVE BEEN PROPERLY PLACED; AND, CONCRETE HAS ACHIEVED ITS 28-DAY STRENGTH.
22. TESTS AND SPECIAL INSPECTIONS SHALL BE PERFORMED FOR STRUCTURAL STEEL AS SPECIFIED IN STEEL NOTES TABLE 1.

PROJECT STRUCTURAL STEEL NOTES:

CONNECTIONS

1. FOR DOUBLE ANGLE BRACING, PRETENSIONED BOLTED OR WELDED INTERMEDIATE CONNECTORS (STITCH PLATES) SHALL BE PROVIDED PER TYPICAL STEEL DETAILS. QUANTITY AND SPACING OF CONNECTIONS SHALL CONFORM TO THE REQUIREMENTS OF PART 4 OF THE AISC STEEL CONSTRUCTION MANUAL.
2. FRAMED BEAM CONNECTIONS SHALL BE DETAILED IN ACCORDANCE WITH THE FOLLOWING:
   A. BEAM CONNECTIONS SHALL BE MADE WITH BOLTS SPACED AT 3" ON CENTER MINIMUM, UON.
   B. THE MINIMUM DISTANCE FROM THE CENTER OF THE HOLE TO FREE EDGE OF CONNECTED PART IN DIRECTION OF FORCE OR DISTANCE OF HOLE TO END OF BEAM WEB SHALL BE 1.5 TIMES THE BOLT DIAMETER.
   C. THE MINIMUM NUMBER OF BOLT ROWS PER DOUBLE ANGLE CONNECTIONS SHALL BE AS INDICATED BELOW:

BOLTS

BEAM SIZE	NO. OF ROWS (TYP)	MIN CLIP ANGLE THICKNESS
W36	10	½"
W33	9	½"
W30	8	½"
W27, W24	7	½"
W21	6	½"
W18	5	½"
W16	4	⅜"
W14	3	⅜"
C12 OR W12	3	⅜"
C10 OR W10	3	⅜"
W10 (PLF < = 30)	2	⅜"
C8 OR W8	2	⅜"
C6 OR W6, W5, W4	1 *	⅜"

* PROVIDE TWO BOLTS PER ANGLE LEG MINIMUM.

3. ALL BOLT HOLES SHALL BE DRILLED OR PUNCHED. BURNING OF HOLES IS NOT PERMITTED IN THE SHOP OR IN THE FIELD.

ANCHOR BOLTS

1. ANCHOR BOLTS SHALL CONFORM TO ASTM F1554, GRADE 36 (UON).
2. ADHESIVE ANCHORS SHALL BE "HILTI HIT-HY 200R V3 ADHESIVE ANCHOR SYSTEMS", UON, OR ENGINEER APPROVED EQUAL.

GROUTING

1. GROUT UNDER ALL COLUMN BASE PLATES.
2. UNLESS OTHERWISE NOTED, BASE PLATES SHALL BE SHIMMED WITH STEEL SHIMS BEFORE GROUTING. LEVELING NUTS SHALL NOT BE USED WITHOUT PRIOR APPROVAL BY ENGINEER.
3. GROUTING SHALL TAKE PLACE IMMEDIATELY AFTER THE FIRST TIER FRAMING HAS BEEN PLUMBED AND BOLTED.
4. GROUT SHALL BE A NONSHRINK, NONCORROSIVE, NONSTAINING, NATURAL AGGREGATE (NONMETALLIC) GROUT AND SHALL BE A PREMIXED, PACKAGED TYPE, INSTALLED IN STRICT ACCORDANCE WITH THE MANUFACTURER'S DIRECTIONS. GROUT SHALL HAVE A MINIMUM COMPRESSIVE STRENGTH OF 5,000 PSI AT 7 DAYS.

ACCEPTABLE GROUTS

SEALTIGHT 588 GROUT	BY R.W. MEADOWS, INC
FIVE STAR GROUT	BY FIVE STAR PRODUCTS
EUCO NS GROUT	BY EUCLID CHEMICAL Co.
SIKAGROUT 212	BY SIKA CORPORATION
MASTERFLOW 928 GROUT	BY BASF
EDOCO NON-FERROUS, NON-SHRINK GROUT	BY DAYTON SUPERIOR

TEST REPORTS

TWO COPIES OF CERTIFIED MILL TEST REPORTS ON ALL ASTM MATERIALS USED IN THIS WORK SHALL BE FURNISHED TO THE ENGINEER.

SHOP DRAWINGS

SHOP DRAWINGS SHALL BE SUBMITTED TO THE ENGINEER FOR APPROVAL BEFORE THE START OF FABRICATION. CONTRACTOR'S LICENSED PROFESSIONAL ENGINEER SHALL CONFIRM IN WRITING THAT THE SHOP AND ERECTION DRAWINGS PROPERLY INCORPORATE THE CONNECTIONS DESIGNED BY THE CONTRACTOR'S ENGINEER.

WELDING

1. WELDING SHALL BE PERFORMED IN ACCORDANCE WITH AWS D1.1 "STRUCTURAL WELDING CODE - STEEL."
2. WELDER CERTIFICATION PROCEDURES SHALL BE AS FOLLOWS:
   A. ALL WELDERS SHALL BE CURRENTLY CERTIFIED AND REGISTERED BY THE LOCAL BUILDING OFFICIALS AND/OR THE AMERICAN WELDING SOCIETY AND, IF REQUIRED, ALL WELDERS SHALL HAVE THEIR CERTIFICATION AVAILABLE TO THE ENGINEER.
   B. A COPY OF CERTIFIED WELDING PROCEDURES NOT PREQUALIFIED BY AWS SHALL BE SUBMITTED FOR INFORMATION.
3. ALL BUTT WELDS SHALL BE COMPLETE PENETRATION WELDS, UON.
4. WHERE SIZE OF THE FILLET WELD OR PARTIAL PENETRATION WELD IS NOT SHOWN, IT SHALL BE IN ACCORDANCE WITH AISC 360, SECTION J2.
5. WELDING PROCEDURE AND SEQUENCES SHALL BE PLANNED TO MINIMIZE WELD SHRINKAGE THAT COULD RESULT IN LAMELLAR TEARING.
6. ALL GROOVE WELDS SHALL BE COMPLETE PENETRATION WELDS.
7. FIELD WELDING WILL BE PERMITTED ONLY WHERE INDICATED ON THE DRAWINGS.
8. EXISTING AND NEW STEEL SURFACES TO BE WELDED SHALL BE CLEANED OF PAINT, GREASE, SCALE OR OTHER FOREIGN MATERIAL.
9. ALL FIELD WELDS SHALL BE WIRE BRUSHED AND CLEANED, THEN PRIMED.
10. NO WELDING WILL BE PERMITTED TO EXISTING BEAM OR COLUMN FLANGES EXCEPT AS INDICATED ON THE DRAWINGS.

REV.	DATE	DESCRIPTION	BY
0	03/18/26	ISSUED FOR BID	DB

STATE OF LOUISIANA — DEAN A. BROOKINS — License No. 38750 — PROFESSIONAL ENGINEER — CIVIL ENGINEERING — 03/18/26

ENGINEER: DEAN BROOKINS
LICENSE #: 38750

WSP USA INC.
ONE PENN PLAZA, 4TH FLOOR,
NEW YORK, NY 10119
CERTIFICATE OF REGISTRATION # EF 0000023

DATE	11/25/2025	JOB NO.	0247759

DESIGNED BY: D. BROOKINS
FILE NAME: S00-02.dwg

SEWERAGE AND WATER BOARD OF NEW ORLEANS

CONTRACT No. 1444

WEST POWER COMPLEX @ CWTP
FUEL OIL DELIVERY SYSTEM

STRUCTURAL

STEEL GENERAL NOTES

DR:	M. BESCHNETT
CK:	D. BROOKINS
AP:	D. BROOKINS
LAST EDIT:	
SCALE:	AS NOTED
DATE:	12/05/2025

A/E DWG NO. S00-02

DWG. No. 12196-W-24

SET NO: SHEET NO: 37 OF 72

3/18/2026 11:30:27 AM

BID PACKAGE - NOT FOR CONSTRUCTION

GENERAL STEEL NOTES (CONTINUED):

STEEL COATING

GENERAL

1. EXPOSED STEEL LOCATED INSIDE BUILDINGS (INCLUDING LADDERS, HANDRAIL, GUARDRAIL, TOE PLATE AND SAFETY GATES) SHALL BE HOT-DIPPED GALVANIZED AFTER FABRICATION.
2. STEEL EXPOSED TO WEATHER (INCLUDING LADDERS, HANDRAIL, GUARDRAIL, TOE PLATE AND SAFETY GATES) SHALL BE HOT-DIP GALVANIZED, UON.
3. STEEL ENCASED IN CONCRETE OR TO RECEIVE FIREPROOFING SHALL NOT BE PAINTED.

GALVANIZING

1. STEEL SURFACES TO BE GALVANIZED SHALL BE CLEANED IN ACCORDANCE WITH SSPC SP 6.
2. MATERIAL SPECIFIED TO BE GALVANIZED SHALL BE HOT-DIP GALVANIZED AFTER FABRICATION ON THE SAME DAY THE SURFACE IS SANDBLASTED OR PICKLED. GALVANIZING SHALL OCCUR BEFORE ASSEMBLY BY BOLTING. GALVANIZING PROCEDURES SHALL BE IN ACCORDANCE WITH ASTM A123, A153 AND A385.
3. IF A BOLTED JOINT IS SPECIFIED AS A SLIP-CRITICAL CONNECTION, THE CONNECTION FAYING SURFACES SHALL BE LEFT UNCOATED OR GALVANIZED FAYING SURFACES SHALL BE ROUGHENED BY HAND WIRE BRUSHING PER THE REQUIREMENTS OF RCSC "SPECIFICATION FOR STRUCTURAL JOUNTS", SECT 3.2.2.(3).
4. CLIPS AND OTHER STRUCTURAL COMPONENTS THAT ARE TO RECEIVE WELDING SHALL NOT BE COATED UNTIL AFTER WELDING IS COMPLETE.
5. REPAIR DAMAGED AND UNCOATED AREAS OF HOT-DIP GALVANIZING IN ACCORDANCE WITH ASTM A780.

STEEL GRATING

1. STEEL GRATING SHALL CONFORM TO NAAMM MBG 531, "METAL BAR GRATING MANUAL FOR STEEL, STAINLESS STEEL, AND ALUMINUM GRATINGS AND STAIR TREADS."
2. STEEL FOR RECTANGULAR SECTION BEARING BARS, CROSS BARS AND CONNECTING BARS SHALL CONFORM TO ASTM A1011 TYPE B.
3. WIRE ROD FOR GRATING CROSS BARS SHALL CONFORM TO ASTM A510.
4. FLOOR GRATING SHALL BE PROVIDED AS INDICATED ON THE CONTRACT DRAWINGS. WELD BANDING BARS TO PERIMETER OF ALL GRATINGS.
5. FOR THOSE ITEMS INDICATED TO BE GALVANIZED, APPLY COATING BY THE HOT-DIP PROCESS IN ACCORDANCE WITH ASTM A123. HOT-DIP GALVANIZE WITH A COATING WEIGHT OF NOT LESS THAN 1.8 OZ/SQ FT OF COATED SURFACE.
6. FLOOR GRATING SHALL BE FASTENED TO STRUCTURAL MEMBERS SO AS TO PERMIT REMOVAL. PROVIDE FOR EACH GRATING A MINIMUM OF FOUR 16 GAGE GALVANIZED SADDLE CLIPS SECURED WITH HEX-HEAD Dp5 SELF DRILLING SCREW, OR ENGINEER APPROVED ALTERNATE FASTENERS.
7. FABRICATE CUTOUTS IN GRATING SECTIONS FOR PENETRATIONS INDICATED. ARRANGE CUTOUTS TO PERMIT GRATING REMOVAL WITHOUT DISTURBING ITEMS PENETRATING GRATINGS. EDGE-BAND OPENINGS IN GRATING THAT INTERRUPT FOUR OR MORE BEARING BARS WITH BARS OF THE SAME SIZE AND MATERIAL AS BEARING BARS.
8. BAND ALL EDGES OF GRATING UNLESS OTHERWISE NOTED.
9. DO NOT NOTCH BEARING BARS AT SUPPORTS TO MAINTAIN ELEVATION.
10. PROVIDE ¼" CLEARANCE BETWEEN SECTIONS OF GRATING AND ¼" CLEARANCE AT HANDRAIL TOE PLATE.

STEEL ERECTION

1. TOLERANCES FOR ERECTION OF THE STRUCTURAL STEEL SHALL CONFORM TO THE "SPECIFICATION FOR STRUCTURAL STEEL BUILDINGS" (AISC 360-16) "CODE OF STANDARD PRACTICE FOR STRUCTURAL STEEL BUILDINGS AND BRIDGES" (AISC 303-16).

TABLE 1

LIST OF TESTS AND SPECIAL INSPECTIONS

IN ACCORDANCE WITH THE INTERNATIONAL BUILDING CODE (IBC) 2021, SECTION 1705.2, THE FOLLOWING MEANS AND METHODS OF CONSTRUCTION ARE SUBJECT TO SPECIAL INSPECTIONS:

VERIFICATION AND INSPECTION TASK	REFERENCED STANDARD
MATERIAL TEST REPORTS AND CERTIFICATIONS	
A. MATERIAL TEST REPORTS AND CERTIFICATIONS FOR ALL STRUCTURAL STEEL ELEMENTS, FASTENERS, WELDING MATERIALS, WELDING PROCEDURES, WELDING PROCEDURE QUALIFICATION RECORDS, WELDER QUALIFICATION RECORDS, QUALITY CONTROL MANUALS AND QUALITY CONTROL INSPECTOR QUALIFICATIONS	AISC 360-16, SECTION N3.2
INSPECTION OF WELDING	
A. INSPECTION PRIOR TO WELDING	AISC 360-16, TABLE N5.4-1
B. INSPECTION DURING WELDING	AISC 360-16, TABLE N5.4-2
C. INSPECTION AFTER WELDING	AISC 360-16, TABLE N5.4-3
D. NONDESTRUCTIVE TESTING OF WELDED JOINTS	AISC 360-16, SECTION N5.5
INSPECTION OF HIGH-STRENGTH BOLTING	
A. INSPECTION PRIOR TO BOLTING	AISC 360-16, TABLE N5.6-1
B. INSPECTION DURING BOLTING	AISC 360-16, TABLE N5.6-2
C. INSPECTION AFTER BOLTING	AISC 360-16, TABLE N5.6-3
INSPECTION OF GALVANIZED STRUCTURAL STEEL MAIN MEMBERS	
A. INSPECTION OF CUT SURFACES OF GALVANIZED STRUCTURAL STEEL MAIN MEMBERS AND EXPOSED CORNERS OF RECTANGULAR HSS FOR CRACKS SUBSEQUENT TO GALVANIZING	AISC 360-16, SECTION N5.7
INSPECTION OF STEEL FRAMES	
A. INSPECTION OF FABRICATED OR ERECTED STEEL FRAMES TO VERIFY COMPLIANCE WITH DETAILS SHOWN ON CONSTRUCTION DOCUMENTS, INCLUDING; BRACES, STIFFENERS, MEMBER LOCATIONS, AND PROPER APPLICATION OF JOINT DETAILS AT EACH CONNECTION	AISC 360-16, SECTION N5.8
INSPECTION OF COLD-FORMED STEEL DECK	
A. PERIODIC INSPECTION OF MARKINGS TO CONFORM TO ASTM STANDARDS SPECIFIED IN THE APPROVED CONSTRUCTION DOCUMENTS	APPLICABLE ASTM MATERIAL STANDARDS
B. PERIODIC INSPECTION OF MANUFACTURER'S CERTIFIED TEST REPORTS	
C. PERIODIC INSPECTION OF FLOOR AND ROOF DECK WELDS	AWS D1.3

REV.	DATE	DESCRIPTION	BY
0	03/18/26	ISSUED FOR BID	DB

STATE OF LOUISIANA
DEAN A. BROOKINS
License No. 38750
PROFESSIONAL ENGINEER
CIVIL ENGINEERING
03/18/26

ENGINEER: DEAN BROOKINS
LICENSE #: 38750

wsp
WSP USA INC.
ONE PENN PLAZA, 4TH FLOOR,
NEW YORK, NY 10119
CERTIFICATE OF REGISTRATION # EP 0000620

DATE	11/25/2025	JOB NO.	0247759

DESIGNED BY: D. BROOKINS
FILE NAME: S00-03.dwg

SEWERAGE AND WATER BOARD OF NEW ORLEANS

CONTRACT No. 1444

WEST POWER COMPLEX @ CWTP
FUEL OIL DELIVERY SYSTEM

STRUCTURAL

STEEL GENERAL NOTES

DR.	M. BESCHNETT
CK:	D. BROOKINS
AP:	D. BROOKINS
LAST EDIT:	
SCALE:	AS NOTED
DATE:	12/05/2025

A/E DWG NO. S00-03

DWG. No. 12196-W-24

SET NO: SHEET NO: 38 OF 72

3/18/2026 11:33:52 AM

BID PACKAGE - NOT FOR CONSTRUCTION

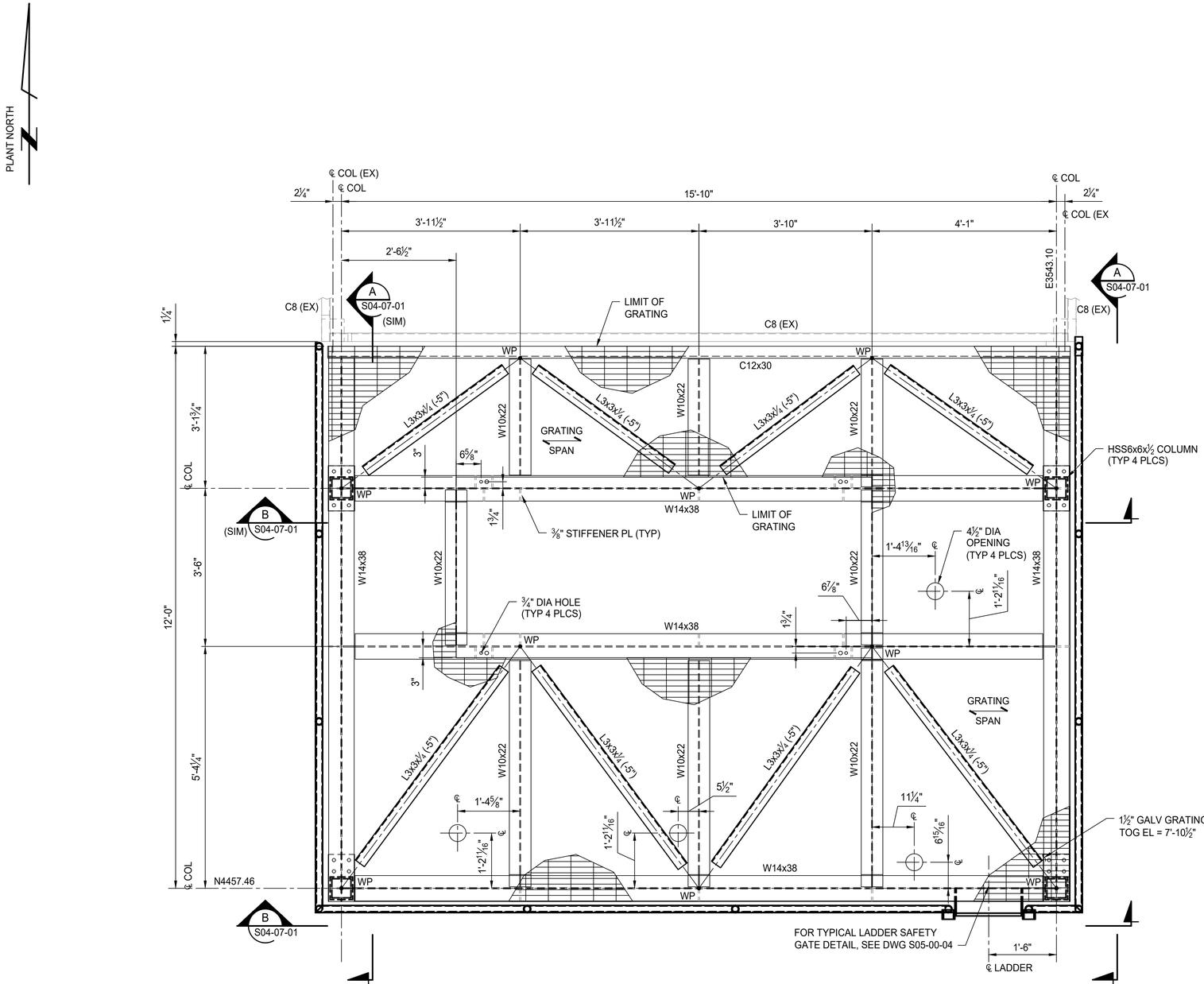

FUEL FORWARDING PUMP PLATFORM PLAN TOS EL = 7'-9" (UON)

SCALE 3/4" = 1'-0"

NOTES

1. FOR STRUCTURAL GENERAL NOTES, SEE DRAWING S00-01.
2. FOR STEEL GENERAL NOTES, SEE DRAWING S00-02 AND S00-03.
3. FOR HORIZONTAL AND VERTICAL BRACING CONNECTION DETAILS, SEE DRAWING S05-00-01.
4. FOR GUARDRAIL DETAILS, SEE DRAWING S05-00-02.
5. FOR GRATING DETAILS, SEE DRAWING S05-00-03.
6. FOR LADDER DETAILS, SEE DRAWING S05-00-04.
7. CONTRACTOR TO PERFORM NON-DESTRUCTIVE TESTING TO LOCATE EXISTING POST TENSION CABLES. NOTIFY ENGINEER IF POST TENSION CABLE LOCATION(S) INTERFERE WITH PROPOSED COLUMN ANCHOR BOLT LOCATIONS.
8. EXISTING FUEL STORAGE CONTAINMENT WALL TOC = 7'-10½". FUEL POLISHER PLATFORM TOP OF GRATING = 7'-10½".

0 1 2 3 FEET

3/4" = 1'- 0"

REV:	DATE	DESCRIPTION	BY
0	03/18/26	ISSUED FOR BID	DB

STATE OF LOUISIANA
DEAN A. BROOKINS
License No. 38750
PROFESSIONAL ENGINEER
IN
CIVIL ENGINEERING
03/18/26

ENGINEER: DEAN BROOKINS
LICENSE #: 38750

WSP USA INC.
ONE PENN PLAZA, 4TH FLOOR,
NEW YORK, NY 10119
CERTIFICATE OF REGISTRATION # EF 2000623

DATE 09/10/25 JOB NO. 0247759

DESIGNED BY: D. BLANCHE
FILE NAME: S03-07-01.dwg

SEWERAGE AND WATER BOARD OF NEW ORLEANS

CONTRACT No. 1444

WEST POWER COMPLEX @ CWTP
FUEL OIL DELIVERY SYSTEM

STRUCTURAL

FUEL FORWARDING PUMP PLATFORM FRAMING PLAN

DR:	M. BESCHNETT
CK:	D. BROOKINS
AP:	D. BROOKINS
LAST EDIT:	
SCALE:	AS NOTED
DATE:	12/05/2025

A/E DWG NO. S03-07-01

DWG. No. 12196-W-24

SET NO: 39 OF 72

BID PACKAGE - NOT FOR CONSTRUCTION

3/18/2026 11:48:51 AM

NOTES

1. FOR STRUCTURAL GENERAL NOTES, SEE DRAWING S00-01.
2. FOR STEEL GENERAL NOTES, SEE DRAWING S00-02 AND S00-03.
3. FOR HORIZONTAL AND VERTICAL CONNECTION DETAILS, SEE DRAWING S05-00-01.
4. FOR GUARDRAIL DETAILS, SEE DRAWING S05-00-02.
5. FOR GRATING DETAILS, SEE DRAWING S05-00-03.
6. FOR LADDER DETAILS, SEE DRAWING S05-00-04.
7. EXISTING FUEL STORAGE CONTAINMENT WALL TOC = 7'-10½". FUEL POLISHER PLATFORM TOP OF GRATING = 7'-10½".

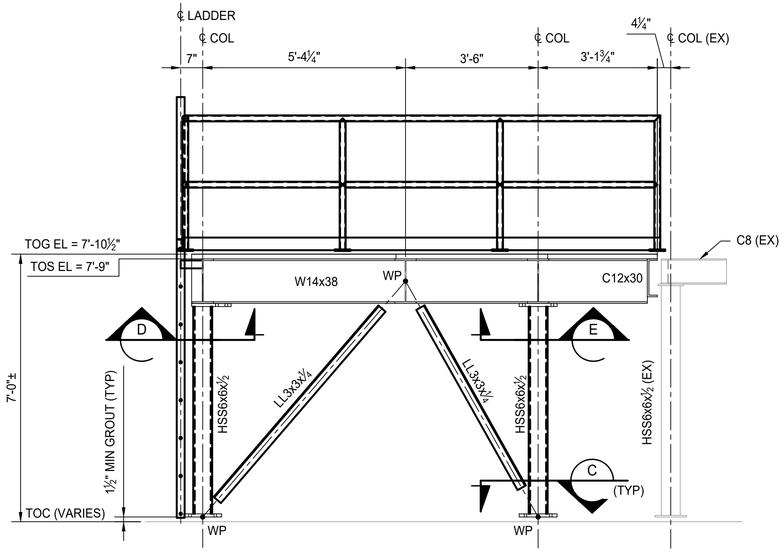

SECTION A
SCALE: 1/2"=1'-0"

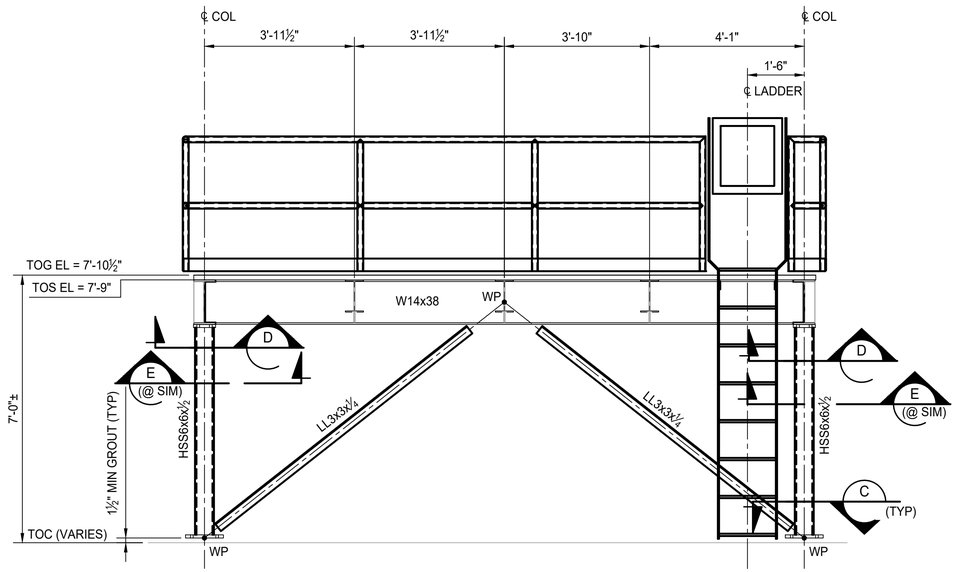

SECTION B
SCALE: 1/2"=1'-0"

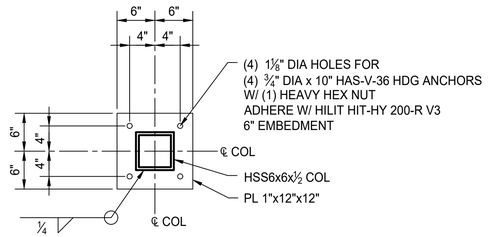

SECTION C
SCALE: 1"=1'-0"
(TYP 4 PLCS)

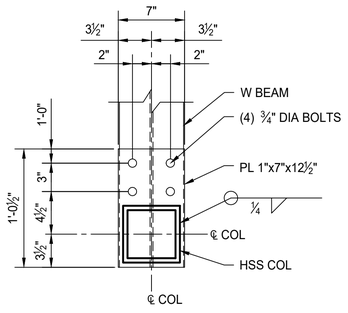

SECTION D
SCALE: 1-1/2"=1'-0"
(TYP 2 PLCS)

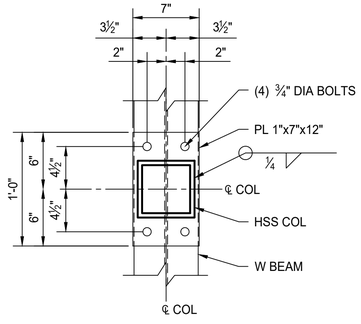

SECTION E
SCALE: 1-1/2"=1'-0"
(TYP 2 PLCS)

0 1 2 3 FEET
3/4" = 1'- 0"

REV:	DATE	DESCRIPTION	BY
0	03/18/26	ISSUED FOR BID	DB

DEAN A. BROOKINS
License No. 38750
PROFESSIONAL ENGINEER
IN
CIVIL ENGINEERING
STATE OF LOUISIANA
03/18/26

ENGINEER: DEAN BROOKINS
LICENSE #: 38750

WSP USA INC.
ONE PENN PLAZA, 4TH FLOOR,
NEW YORK, NY 10119
CERTIFICATE OF REGISTRATION # EF 2000623

DATE	09/10/25	JOB NO.	0247759

DESIGNED BY: D. BLANCHE
FILE NAME: S04-07-01.dwg

SEWERAGE AND WATER BOARD OF NEW ORLEANS

CONTRACT No. 1444
WEST POWER COMPLEX @ CWTP
FUEL OIL DELIVERY SYSTEM

STRUCTURAL

FUEL FORWARDING PUMP PLATFORM FRAMING SECTIONS

DR:	M. BESCHNETT
CK:	D. BROOKINS
AP:	D. BROOKINS
LAST EDIT:	
SCALE:	AS NOTED
DATE:	12/05/2025

A/E DWG NO.
S04-07-01

DWG. No. 12196-W-24

SET NO: SHEET NO: 40 OF 72

3/18/2026 11:49:22 AM

BID PACKAGE - NOT FOR CONSTRUCTION

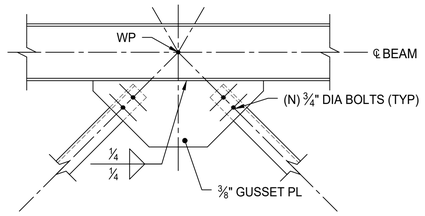

DETAIL 1
SCALE: NTS

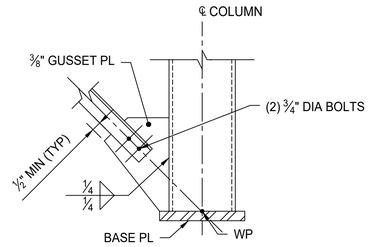

BRACING CONNECTION

DETAIL 2
SCALE: NTS

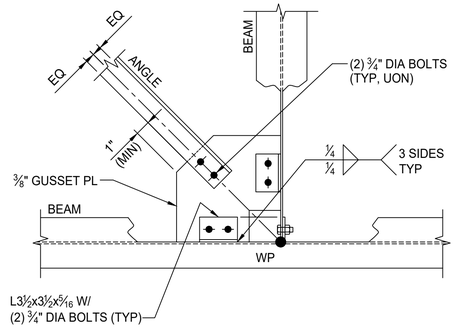

DETAIL 3
SCALE: NTS

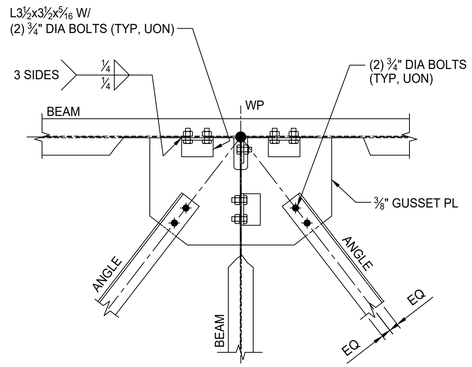

DETAIL 4
SCALE: NTS

REV.	DATE	DESCRIPTION	BY
0	03/18/26	ISSUED FOR BID	DB

STATE OF LOUISIANA
DEAN A. BROOKINS
License No. 38750
PROFESSIONAL ENGINEER
CIVIL ENGINEERING
03/18/26

ENGINEER: DEAN BROOKINS
LICENSE #: 38750

wsp
WSP USA INC.
ONE PENN PLAZA, 4TH FLOOR,
NEW YORK, NY 10119
CERTIFICATE OF REGISTRATION # EF.0000023

DATE	11/25/2025	JOB NO.	0247759

DESIGNED BY: D. BROOKINS
FILE NAME: S05-00-01.dwg

SEWERAGE AND WATER BOARD OF NEW ORLEANS

CONTRACT No. 1444
WEST POWER COMPLEX @ CWTP
FUEL OIL DELIVERY SYSTEM

STRUCTURAL

HORIZONTAL AND VERTICAL BRACING CONNECTION DETAILS

DR:	M. BESCHNETT
CK:	D. BROOKINS
AP:	D. BROOKINS
LAST EDIT:	
SCALE:	AS NOTED
DATE:	12/05/2025

A/E DWG NO.
S05-00-01

DWG. No. 12196-W-24

SET NO: SHEET NO: 41 OF 72

BID PACKAGE - NOT FOR CONSTRUCTION

3/18/2026 11:49:57 AM

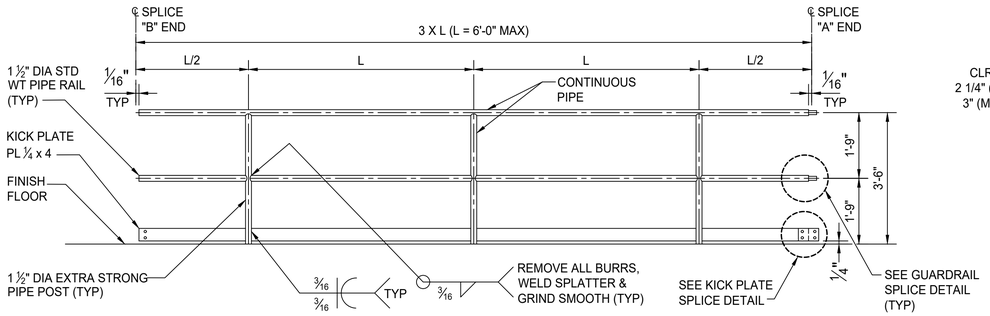

TYPICAL GUARDRAIL ELEVATION

SCALE: NTS

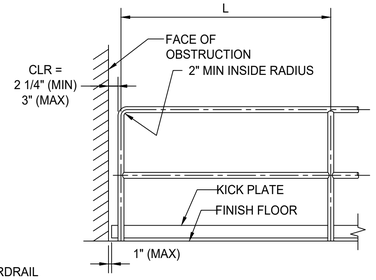

NOTE:
FOR INFO NOT SHOWN
SEE TYP GUARDRAIL ELEVATION

ALT GUARDRAIL END ELEVATION

SCALE: NTS

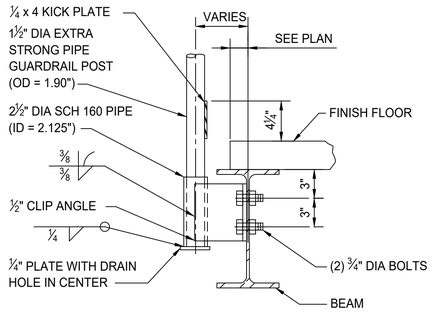

REMOVABLE GUARDRAIL

DETAIL 1/-

SCALE: NTS

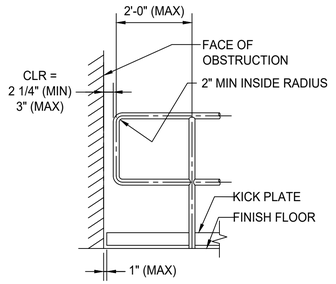

NOTE:
FOR INFO NOT SHOWN
SEE TYP GUARDRAIL ELEVATION

ALT GUARDRAIL END ELEVATION

SCALE: NTS

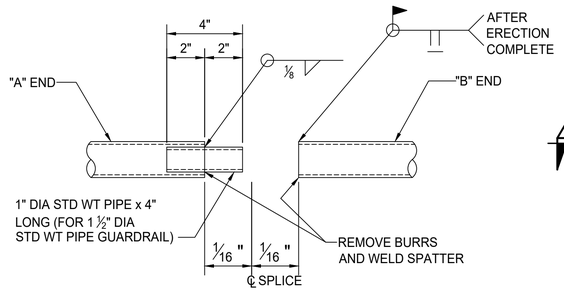

AS SHOWN OR USE APPROVED COMMERCIAL CONNECTION

GUARDRAIL SPLICE DETAIL

SCALE: NTS

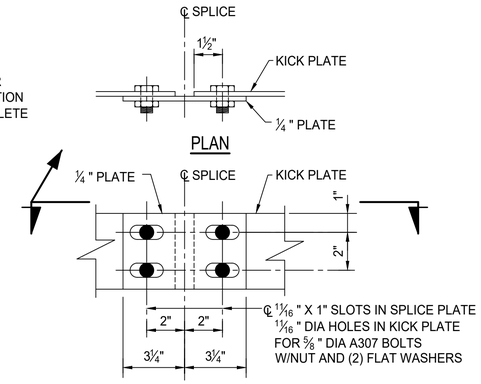

ELEVATION

KICK PLATE SPLICE DETAIL

SCALE: NTS

REV:	DATE	DESCRIPTION	BY
0	03/18/26	ISSUED FOR BID	DB

STATE OF LOUISIANA
DEAN A. BROOKINS
License No. 38750
PROFESSIONAL ENGINEER
IN
CIVIL ENGINEERING
03/18/26

ENGINEER: DEAN BROOKINS
LICENSE #: 38750

WSP USA INC.
ONE PENN PLAZA, 4TH FLOOR,
NEW YORK, NY 10119
CERTIFICATE OF REGISTRATION # EF.0000623

DATE 11/25/2025 JOB NO. 0247759

DESIGNED BY: D. BROOKINS
FILE NAME: S05-00-02.dwg

SEWERAGE AND WATER BOARD
OF NEW ORLEANS

CONTRACT No. 1444
WEST POWER COMPLEX @ CWTP
FUEL OIL DELIVERY SYSTEM

STRUCTURAL

GUARDRAIL DETAILS

DR. M. BESCHNETT
CK: D. BROOKINS
AP: D. BROOKINS
LAST EDIT:
SCALE: AS NOTED
DATE: 12/05/2025

A/E DWG NO.
S05-00-02

DWG. No. 12196-W-24

SET NO: SHEET NO: 42 OF 72

3/18/2026 11:50:29 AM

BID PACKAGE - NOT FOR CONSTRUCTION

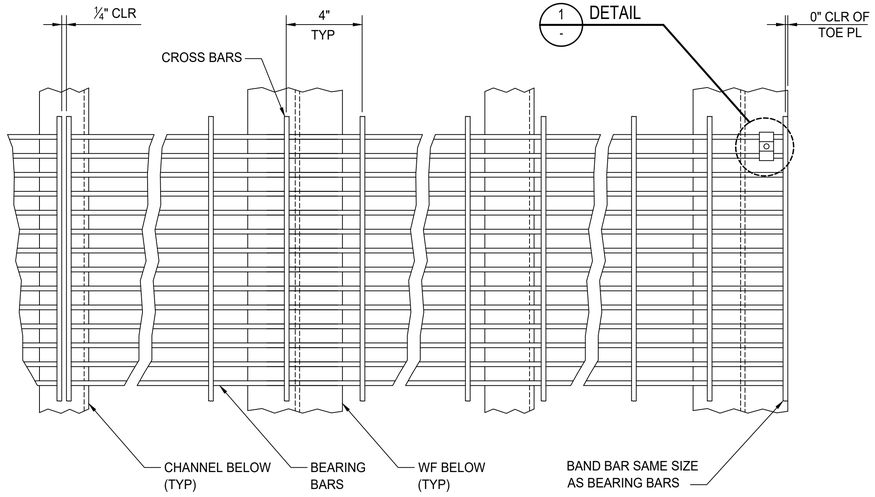

NOTE: BAND ALL EDGES UNLESS OTHERWISE NOTED.

PLAN

SCALE: NTS

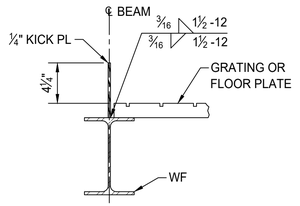

TYPE 1

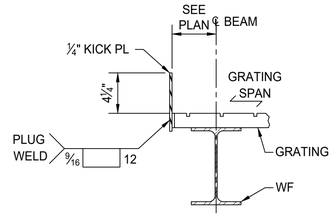

TYPE 1

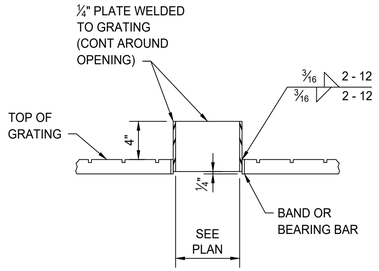

TYPICAL GRATING PENETRATION

DETAIL 4 / -

SCALE: NTS

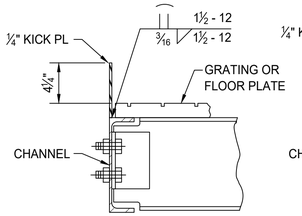

TYPE 2

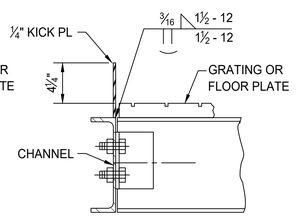

TYPE 3

GRATING OR FLOOR PLATE @ FLOOR EDGE

DETAIL 2 / -

SCALE: NTS

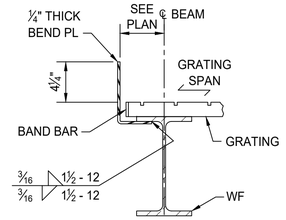

TYPE 2

GRATING CANTILEVER

DETAIL 3 / -

SCALE: NTS

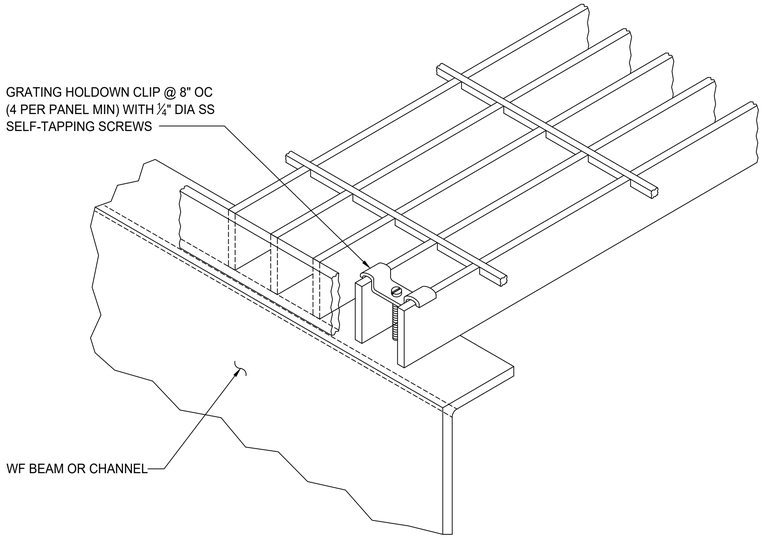

TYPICAL CONNECTION AT GRATING SUPPORT

DETAIL 1 / -

SCALE: NTS

REV.	DATE	DESCRIPTION	BY
0	05/11/26	ISSUED FOR BID	DB

STATE OF LOUISIANA
DEAN A. BROOKINS
License No. 38750
PROFESSIONAL ENGINEER
IN
CIVIL ENGINEERING
5/11/2026

ENGINEER: DEAN BROOKINS
LICENSE #: 38750

WSP USA INC.
ONE PENN PLAZA, 17th FLOOR,
NEW YORK, NY 10119
CERTIFICATE OF REGISTRATION # EF 3000023

DESIGNED BY: D. BROOKINS
FILE NAME: S05-00-03.dwg

SEWERAGE AND WATER BOARD OF NEW ORLEANS

CONTRACT No. 1444

WEST POWER COMPLEX @ CWTP
FUEL OIL DELIVERY SYSTEM

STRUCTURAL

GRATING DETAILS

DR.	M. BESCHNETT
CK:	D. BROOKINS
AP:	D. BROOKINS
LAST EDIT:	
SCALE:	AS NOTED
DATE:	12/05/2025
DATE	11/25/2025
JOB NO.	0247759
A/E DWG NO.	S05-00-03
DWG. No.	12196-W-24
SET NO:	
SHEET NO:	OF

5/11/2026 6:38:12 PM

BID PACKAGE - NOT FOR CONSTRUCTION

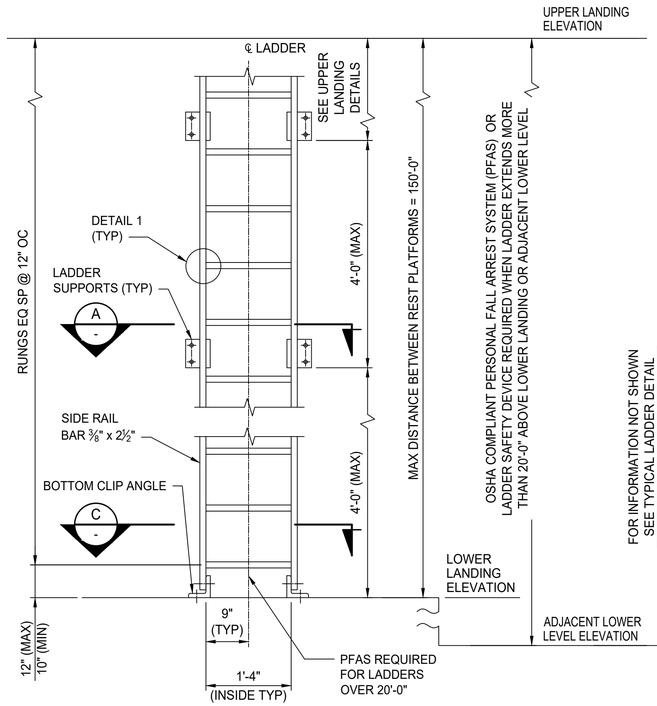

TYPICAL LADDER DETAIL

SCALE: NTS

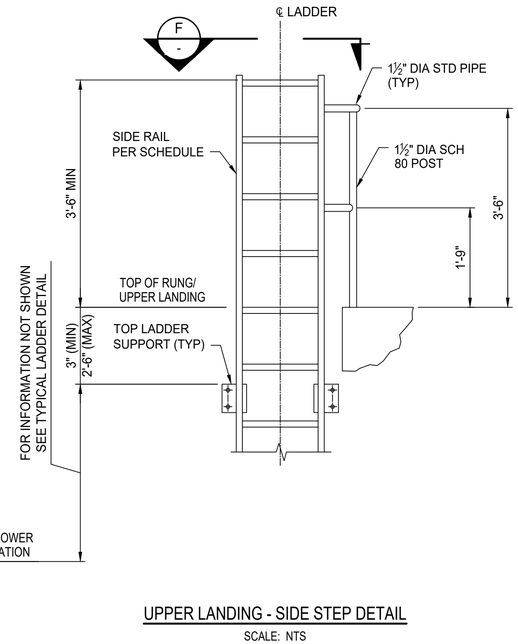

UPPER LANDING - SIDE STEP DETAIL

SCALE: NTS

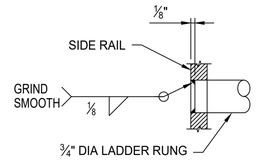

DETAIL 1

SCALE: NTS

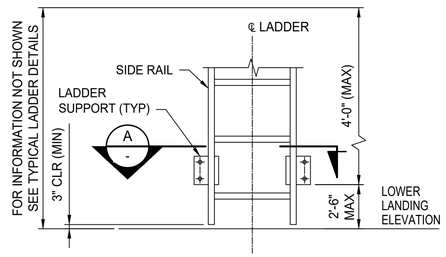

ALTERNATE LOWER LANDING DETAIL

SCALE: NTS

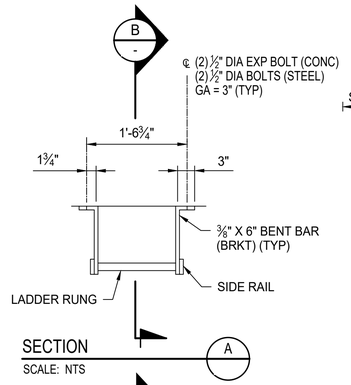

SECTION B

SCALE: NTS

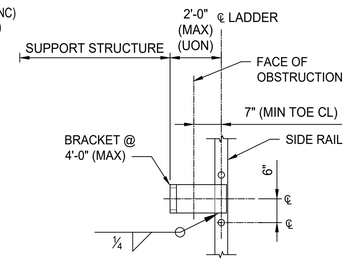

SECTION A

SCALE: NTS

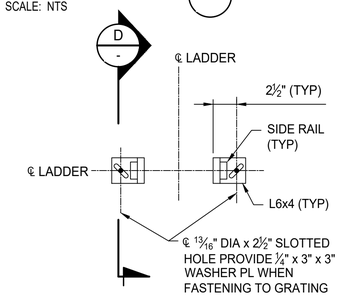

SECTION C

SCALE: NTS

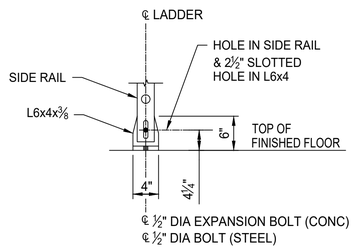

SECTION D

SCALE: NTS

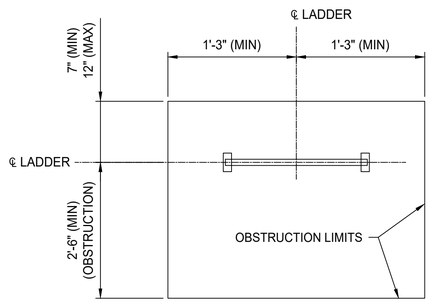

TYPICAL LADDER CLEARANCE W/O CAGE

SCALE: NTS

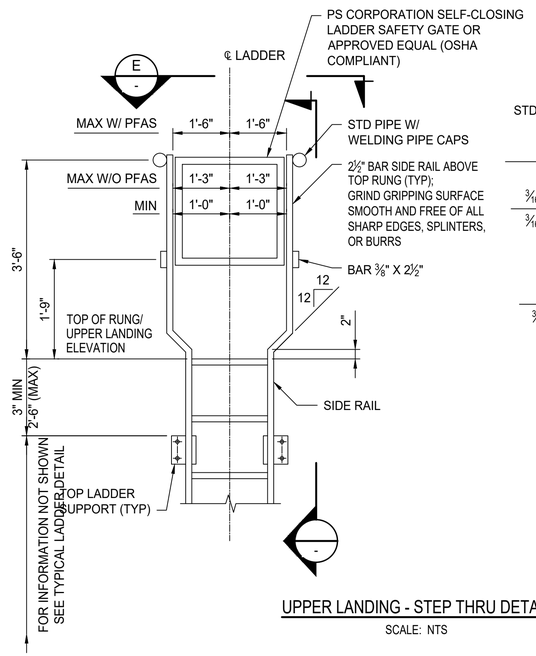

UPPER LANDING - STEP THRU DETAIL

SCALE: NTS

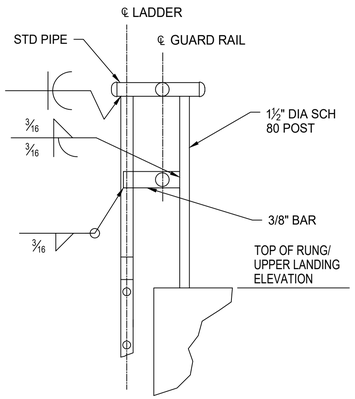

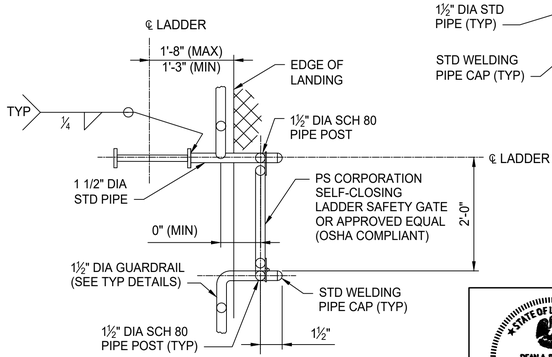

SECTION F

SCALE: NTS

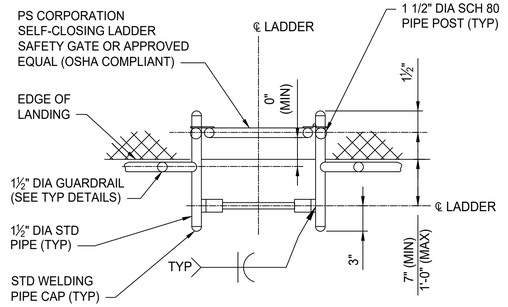

SECTION E

SCALE: NTS

REV.	DATE	DESCRIPTION	BY
0	03/18/26	ISSUED FOR BID	DB

SEWERAGE AND WATER BOARD OF NEW ORLEANS

CONTRACT No. 1444

WEST POWER COMPLEX @ CWTP
FUEL OIL DELIVERY SYSTEM

STRUCTURAL

LADDER DETAILS

STATE OF LOUISIANA
DEAN A. BROOKINS
License No. 38750
PROFESSIONAL ENGINEER
CIVIL ENGINEERING
03/18/26

ENGINEER: DEAN BROOKINS
LICENSE #: 38750

WSP USA INC.
ONE PENN PLAZA, 4TH FLOOR,
NEW YORK, NY 10119
CERTIFICATE OF REGISTRATION # EF.0000023

DATE	11/25/2025	JOB NO.	0247759

DESIGNED BY: D. BROOKINS
FILE NAME: S05-00-04.dwg

DR.	M. BESCHNETT
CK:	D. BROOKINS
AP:	D. BROOKINS
LAST EDIT:	
SCALE:	AS NOTED
DATE:	12/05/2025

A/E DWG NO. S05-00-04

DWG. No. 12196-W-24

SET NO: SHEET NO: 44 OF 72

BID PACKAGE - NOT FOR CONSTRUCTION

3/18/2026 11:48:14 AM

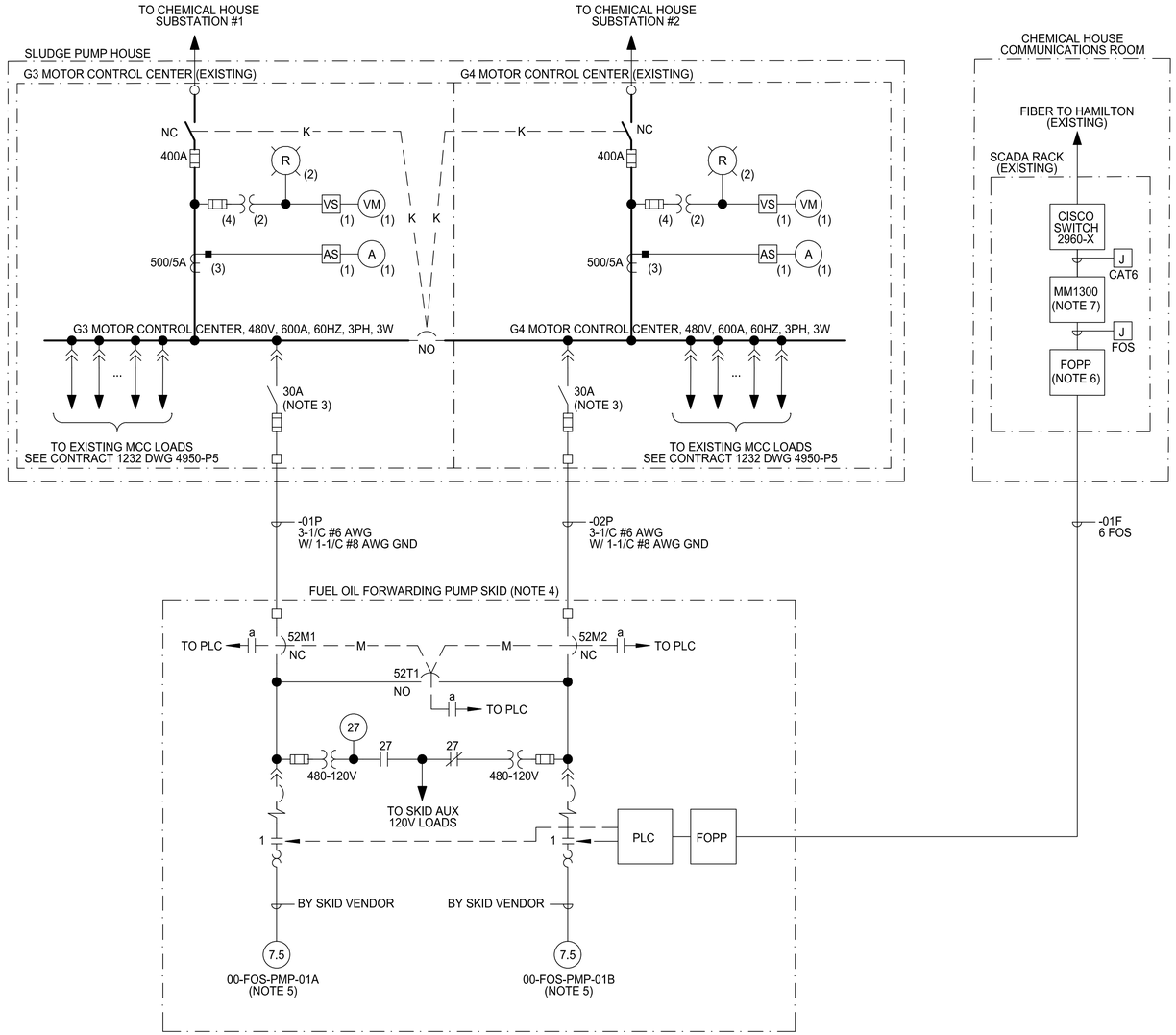

NOTES:

1. ALL CABLES ARE PREFIXED WITH CWPFG00ELAMTR01 UNLESS OTHERWISE NOTED.
2. CONDUCTORS FOR 480V POWER CABLES SHALL BE COLOR CODED AS FOLLOWS:
   PHASE 1: BROWN
   PHASE 2: ORANGE
   PHASE 3: YELLOW
   GROUND CONDUCTORS SHALL BE TAPED GREEN AT BOTH ENDS. WHERE COLORS OF A MULTICONDUCTOR CABLE DO NOT MATCH THIS REQUIREMENT, TAPE BOTH ENDS OF THE CABLE AS REQUIRED.
3. 30A FUSED SWITCHES ARE EXISTING SPARES ON MCC G3 AND G4.
4. FUEL OIL FORWARDING SKID AND ALL ASSOCIATED COMPONENTS SHALL BE PROCURED BY CONTRACTOR. CONTRACTOR SHALL COORDINATE THE DESIGN WITH THE FINAL SKID CONFIGURATION AS DETERMINED BY PUMP SKID SUPPLIER.
5. MOTOR HORSEPOWER IS ESTIMATED. FINAL VALUE SHALL BE DETERMINED BY PUMP SKID SUPPLIER.
6. PORT SHALL BE ASSIGNED ON EXISTING PATCH PANEL(S). CONTRACTOR SHALL COORDINATE WITH SWBNO.
7. CONTRACTOR SHALL PROVIDE A SINGLE MODE MEDIA CONVERTER, BLACK BOX P/N LHC043A-R3, AND INSTALL IN THE EXISTING RACKMOUNT POWER TRAY. MM1300 WILL CONNECT TO EXISTING CISCO SWITCH VIA A CAT6 CONNECTION. CONTRACTOR SHALL COORDINATE PORT ASSIGNMENT WITH SWBNO.

LEGEND:

FOPP	FIBER OPTIC PATCH PANEL
FOS	SINGLE MODE (9 MICRON) FIBER OPTIC CABLE
NO	NORMALLY OPEN
NC	NORMALLY CLOSED
52M1	MAIN BREAKER, WHERE '1' REPRESENTS THE BREAKER NUMBER
52T1	TIE BREAKER, WHERE '1' REPRESENTS THE BREAKER NUMBER
[J]	JUMPER BY CONTRACTOR
— —K— —	KEY INTERLOCK
— —M— —	MECHANICAL INTERLOCK

REV.	DATE	DESCRIPTION	BY
0	03/13/2026	ISSUED FOR BID	MV

STATE OF LOUISIANA
JOSEPH K. BONDANK
License No. 36160
PROFESSIONAL ENGINEER
5/16 / 2026

ENGINEER: JOSEPH K. BONDANK
LICENSE #: PE # 36160

wsp
WSP USA INC.
ONE PENN PLAZA, 5TH FLOOR,
NEW YORK, NY 10119
CERTIFICATE OF REGISTRATION # EF 2030023

DATE	03/13/2026	JOB NO.	174602

DESIGNED BY: M. VILLALTA
FILE NAME: E01-40.dwg

SEWERAGE AND WATER BOARD OF NEW ORLEANS

CONTRACT No. 1444

WEST POWER COMPLEX @ CWTP
FUEL OIL DELIVERY SYSTEM

ELECTRICAL

ONE LINE DIAGRAM - MCC G3/G4 & FUEL OIL FORWARDING SKID

DR.	M. VILLALTA
CK:	R. WHIPPLE
AP:	J. BONDANK
LAST EDIT:	
SCALE:	NONE
DATE:	03/13/2026

A/E DWG NO.
E01-40

DWG. No. 12196-W-24

SET NO:
SHEET NO: 45 OF 72

BID PACKAGE - NOT FOR CONSTRUCTION

3/13/2026
10:12:19 AM

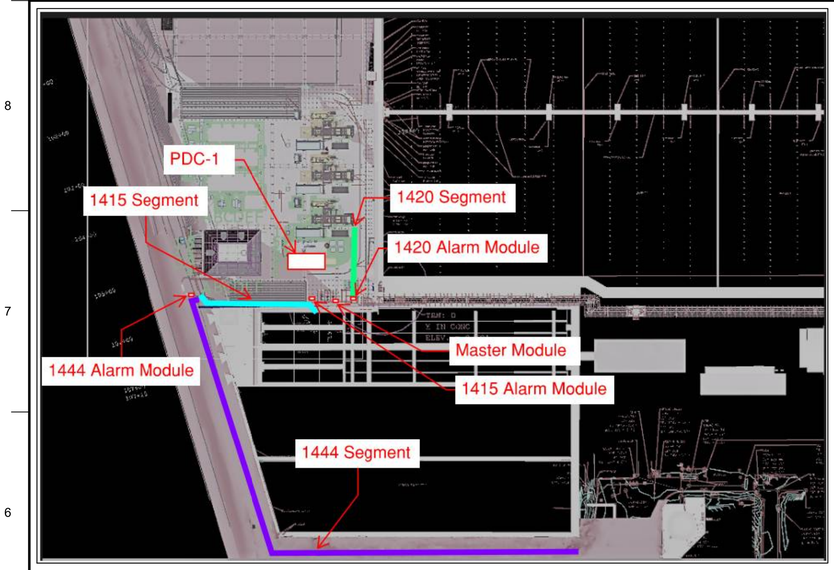

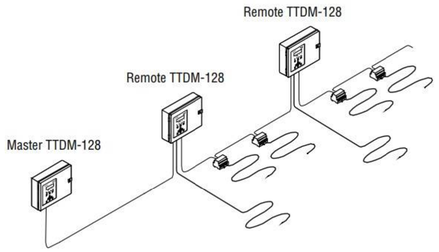

Master TTDM-128 WITH NETWORK SYSTEM (Multiple Remote TTDM-128s and SIMS)

(SEE QUICK SETUP SECTION)

- The same as the single TTDM-128 network system, except with additional TTDM-128's acting as remote modules, and one TTDM-128 acting as Master.
- Additional TTSIM and TT-NRM modules can be installed on the network, up to a total of 127 modules (including TTDM-128's).
- Modbus interface to a host computer is only available at the Master TTDM-128 in this configuration.

NOTES:

(1) A PARTIAL LEAK DETECTION SYSTEM HAS BEEN FURNISHED AND INSTALLED UNDER PREVIOUS CONTRACT 1415 AND 1420. THE INTENT OF THIS DRAWING IS TO SHOW THE REQUIREMENTS FOR THIS CONTRACT 1444, TO EXPAND AND CONNECT THE 1415 & 1420 LEAK DETECTION SYSTEMS FOR THE FUEL OIL PIPING TO BE INSTALLED UNDER THIS CONTRACT 1444. INTEGRATION OF THE OVERALL LEAK DETECTION SYSTEM INTO THE EXISTING PLANT BOP PLC IS DESCRIBED IN OTHER 1444 DOCUMENTS.

(2) THE PARTIAL LEAK DETECTION SYSTEM PROVIDED BY CONTRACT 1415 & 1420 IS A RAYCHEM SYSTEM. THE EXPANDED DESIGN SHOWN ON THIS DRAWING IS BASED ON A RAYCHEM SYSTEM. CONTRACTOR SHALL PROVIDE RAYCHEM SYSTEM COMPONENTS TO EXPAND THE SYSTEM OR AN APPROVED EQUIVALENT SUPPLIER / SYSTEM THAT CAN INTEGRATE SEEMLESSLY WITH THE EXISTING EQUIPMENT. THE FINAL LEAK DETECTION SYSTEM SHALL ACT AS ONE SYSTEM AND NOT SEPARATE SYSTEMS.

(3) A SINGLE TA-SIM-2-120 ALARM MODULE HAS PREVIOUSLY BEEN PROVIDED UNDER CONTRACTS 1415 AND 1420. ONE ADDITIONAL ALARM MODULE SHALL BE PROVIDED UNDER THIS CONTRACT 1444. THE ALARM MODULES SHALL BE PROVIDED WITH ALL REQUIRED INSTALLATION HARDWARE NECESSARY FOR THE PROPER INSTALLATION OF THE FUEL LEAK DETECTION SYSTEM.

(4) A TTDM-128 LEAK DETECTION MASTER HAS PREVIOUSLY BEEN PROVIDED UNDER CONTRACT 1420 TO CONNECT THE ENTIRE LEAK DETECTION NETWORK.

(5) A JUMPER CABLE WILL MAKE THE CONNECTION FROM THE SENSOR CABLE LOCATED IN THE DOUBLE WALLED PIPE TO THE MODULES.

(6) PROVISIONS SHALL BE MADE FOR THE MODULES BE SUITED FOR OUTDOOR USE.
EXAMPLE: INSTALLED IN A NEMA 4X JUNCTION BOX.

(7) CONTRACTOR SHALL COMPLETE FINAL LEAK DETECTION SYSTEM CONNECTIONS BETWEEN SENSOR MODULES AND THE MASTER MODULE, AND THE EXISTING PLANT BOP PLC. CONTRACTOR SHALL COMPLETE THE INTEGRATION AND COMMISSIONING OF THE SYSTEM.

(8) THE TTDM-128 SHALL BE CONNECTED TO THE BOP PLC FOR ALARM PURPOSES.

(9) COMMUNICATION AND POWER CABLES SHALL BE ROUTED IN SEPARATE CONDUITS. WIRING TO TO PDC-1 SHOULD BE ROUTED THROUGH ESTABLISHED CONDUITS. REFER TO DRAWINGS E06-14 & E06-03.

(10) THE FUEL OIL DOUBLE-WALL LEAK DETECTION INFRASTRUCTURE CONTROL PANELS THAT REQUIRE 1P 120VAC POWER SHALL BE SUPPLIED FROM WPCAUX-0-ELP60-PP-501 60Hz 208/120VAC POWER PANEL LOCATED IN PDC-1 (WPCAUX-0-ENCL-PDC-01).

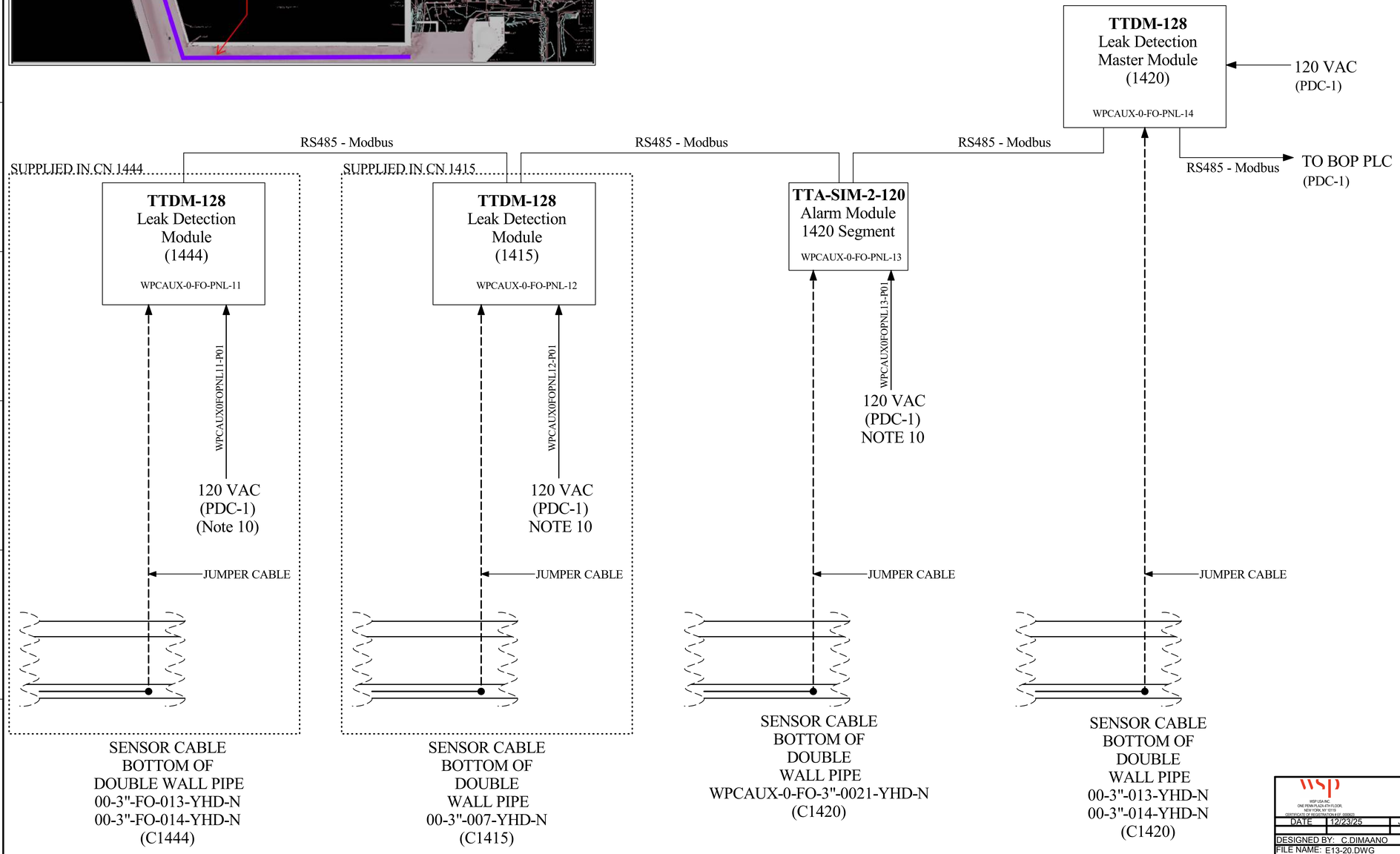

REV.	DATE	DESCRIPTION	BY
0	03/11/25	ISSUED FOR BID	CD

STATE OF LOUISIANA
JOSEPH K. BONDANK
License No. 36160
PROFESSIONAL ENGINEER

WSP USA INC
ONE PENN PLAZA 4TH FLOOR
NEW YORK, NY 10119
CERTIFICATE OF AUTHORIZATION # 00-000825

SEWERAGE AND WATER BOARD OF NEW ORLEANS

CONTRACT No. 1444
WEST POWER COMPLEX
PHASE 1 INSTALLATION AND COMMISSIONING

ELECTRICAL

BLOCK DIAGRAM
FUEL OIL LEAK DETECTION SYSTEM

DR:	C.DIMAANO
CK:	C.DIMAANO
AP:	J.BONDANK
LAST EDIT:	
SCALE:	NTS
DATE:	12/23/25
DATE	12/23/25
JOB NO.	174602
DESIGNED BY:	C.DIMAANO
FILE NAME:	E13-20.DWG
WE DWG NO.	E13-20
DWG. No.	12196-W-24
SET NO:	
SHEET NO.	OF

BID PACKAGE NOT FOR CONSTRUCTION

ELECTRICAL GENERAL NOTES

ELECTRICAL GENERAL NOTES (SUPPLEMENTAL TO SCOPE OF WORK):

1. COORDINATE WITH LOCAL UTILITIES SERVING THIS PROJECT FOR POWER, TELEPHONE AND CABLE TV. CONTRACTOR SHALL INCLUDE IN BASE BID ALL COSTS FOR TRENCHING; BACKFILL, CONDUIT AND CABLING AS REQUIRED FOR COMPLETE AND OPERABLE INSTALLATION OF ALL UTILITY SYSTEMS AND EQUIPMENT.

2. ALL WORK FOR UTILITY COMPANY INSTALLATION SHALL COMPLY WITH UTILITY COMPANY STANDARDS AND REGULATIONS. CONTRACTOR SHALL INSTALL ALL UTILITY COMPANY CONDUITS, STRUCTURES, VAULTS AND PADS, ETC. AS INDICATED ON THE UTILITY COMPANY SERVICE DRAWINGS FOR THIS PROJECT. OBTAIN A COPY OF ALL FINAL UTILITY SERVICE DRAWINGS AND PROVIDE ALL EQUIPMENT AND WIRING AS INDICATED. CONTRACTOR IS RESPONSIBLE FOR ALL INSTALLATION COSTS AND INSPECTION FEES FOR UTILITY COMPANY.

3. THE TERM "PROVIDE" MEANS TO FURNISH AND INSTALL.

4. COMPLY WITH ALL NATIONAL, STATE, COUNTY, CITY, AND LOCAL CODES AND ORDINANCES HAVING JURISDICTION, INCLUDING RULES AND REQUIREMENTS OF UTILITY SERVING AGENCIES.

5. INCORPORATE ALL CODES AND ORDINANCES INTO THE BASE BID AND INSTALLATION OF WORK. NO ADDITIONAL FUNDS WILL BE ALLOCATED FOR WORK REQUIRED TO CONFORM TO REGULATIONS AND REQUIREMENTS AND/OR TO OBTAIN APPROVAL OF WORK.

6. OBTAIN AND PAY FOR ALL REQUIRED PERMITS AND LICENSES.

7. ALL INSTALLATIONS, AT A MINIMUM, SHALL COMPLY WITH THE FOLLOWING CODES AND STANDARDS:

   A. NATIONAL ELECTRIC CODE.
   B. APPLICABLE NFPA STANDARDS.
   C. HEALTH CODES.
   D. FIRE CODE AS ADOPTED BY AUTHORITY HAVING JURISDICTION.
   E. THE NATIONAL ELECTRICAL MANUFACTURER'S ASSOCIATION STANDARDS.
   F. AMERICAN NATIONAL STANDARDS INSTITUTE.
   G. ALL LOCALLY ADOPTED AMENDMENTS, CODES AND ORDINANCES IN THE JURISDICTION OF THIS PROJECT.
   H. ALL ELECTRICAL COMPONENTS AND DEVICES SHALL BE UL LISTED OR LISTED BY OTHER APPROVED TESTING AGENCY.

8. ALL CODES AND STANDARDS SHALL BE THE LATEST EDITIONS AS ADOPTED BY THE AUTHORITY HAVING JURISDICTION FOR THIS PROJECT. CODES AND STANDARDS AS ADOPTED BY THE STATE OF LOUISIANA SHALL BE THE MINIMUM STANDARDS FOR THIS PROJECT. OBTAIN CURRENT COPIES OF ALL LOCALLY ADOPTED CODES AND ORDINANCES PRIOR TO BID AND INCLUDE ALL COSTS TO COMPLY WITH CODES AND ORDINANCES IN BASE BID.

9. DESIGN DRAWINGS ARE DIAGRAMMATIC AND ARE ONLY INTENDED TO DEFINE THE BASIC FUNCTIONS REQUIRED. PROVIDE ALL MATERIAL, ETC. NECESSARY TO ACCOMPLISH THESE REQUIREMENTS. MINOR DEVIATIONS FROM THE DESIGN LAYOUT ARE ANTICIPATED AND ARE A PART OF THE WORK INCLUDED. HOWEVER, NO CHANGES THAT ALTER THE CHARACTER OF THE WORK WILL BE PERMITTED. DO NOT SCALE THE DRAWINGS.

10. IF A CONFLICT OCCURS BETWEEN THE DESIGN DRAWINGS AND SPECIFICATIONS, BRING ANY ISSUES TO THE ATTENTION OF THE ENGINEER.

11. PROVIDE SHOP DRAWING LAYOUT OF ALL ROOMS WITH ELECTRICAL DISTRIBUTION EQUIPMENT. LAYOUT SHALL SHOW LOCATIONS OF ELECTRICAL EQUIPMENT AND SHALL BE DRAWN TO SCALE.

12. MAINTAIN ACCURATE CONTINUOUS RECORDS OF ANY AND ALL CHANGES FROM THE CONTRACT DOCUMENTS AND SHOP DRAWINGS. UPON COMPLETION OF THE PROJECT, DELIVER TO THE OWNER, ONE (1) SET OF LEGIBLE AND REPRODUCIBLE COPIES OF THESE "AS-BUILT" RECORD DRAWINGS.

13. ALL TERMINATIONS AND DEVICES SHALL BE LISTED FOR 75 DEGREES C FOR 100 AMPERE RATED EQUIPMENT AND 60 DEGREES C FOR LESS THAN 100 AMPERE UNLESS NOTED OTHERWISE.

14. ALUMINUM CONDUCTORS SHALL NOT BE USED.

15. THE FOLLOWING CONDUCTOR SIZES SHALL BE PROVIDED FOR 20A, 1PH BRANCH CIRCUITS (HOT, NEUTRAL & GROUND); BASED ON ACTUAL CIRCUIT LENGTH, UPSIZE RACEWAYS ACCORDINGLY.

CONDUCTOR SIZE	120V	208V	277V	480V
#12 AWG	0-70FT.	0-135FT.	0-175FT.	0-300FT.
#10 AWG	71-110FT.	136-200FT.	176-275FT.	301-500FT.
#8 AWG	111-180FT.	201-300FT.	276-455FT.	501-760FT.
#6 AWG	181-300FT.	301-500FT.	456-650FT.	761-1000FT.

16. ALL LIGHTING FIXTURES SHALL BE LED TYPE AND U.L. LISTED OR LISTED BY RECOGNIZED TESTING AGENCY.

17. ALL LAMPS SHALL BE BY THE SAME MANUFACTURER AND FURNISHED BY THE CONTRACTOR UNLESS NOTED OTHERWISE ON THE DRAWINGS. ALL BALLASTS SHALL BE LOW HARMONIC TYPE, THD<10%.

18. PROVIDE SEPARATE NEUTRAL CONDUCTORS FOR ALL GFCI RECEPTACLES OR GFCI CIRCUITS, FOR ALL DIMMING CONTROLLED LIGHTING CIRCUITS, ELECTRONIC EQUIPMENT WITH SWITCHING POWER SUPPLIES AND ALL GAMING BRANCH CIRCUITS.

19. ALL WORK SHALL BE PROPERLY SUPPORTED FROM THE BUILDING STRUCTURE IN AN APPROVED MANNER AND FASTENED TO BUILDING CONSTRUCTION WITH APPROVED SUPPORTS.

20. COORDINATE ELECTRICAL WORK WITH OTHER TRADES PRIOR TO SUBMITTING BID.

21. REFER TO DRAWINGS FOR LOCATION OF ELECTRICAL DEVICES. IF LOCATIONS ARE NOT DEPICTED ON DRAWINGS, OBTAIN APPROVAL OF ENGINEER/OWNER PRIOR TO ROUGH-IN.

22. ALL ELECTRICAL DISTRIBUTION EQUIPMENT SHALL BE OF THE SAME MANUFACTURER, INCLUDING: PANELBOARDS, TRANSFORMERS, DISTRIBUTION PANELS, SWITCHBOARDS, DISCONNECTS, MOTOR STARTERS, ETC.

23. RACEWAYS SHALL BE INSTALLED CONCEALED, UNLESS NOTED OTHERWISE.

24. PROVIDE 200 LB. NYLON PULL STRING IN ALL EMPTY RACEWAYS.

25. RACEWAYS AND OUTLETS PASSING THROUGH OR INSTALLED IN FIRE RATED CONSTRUCTION SHALL BE SEALED WITH U.L. LISTED FIRE RATED SEALANT IN ACCORDANCE WITH SEALANT MANUFACTURERS' RECOMMENDATIONS. WHERE ELECTRICAL RACEWAYS ARE INSTALLED THROUGH RATED FLOORS OR WALLS, THE CONTRACTOR SHALL PROVIDE APPROPRIATE FITTINGS APPROVED BY ALL REQUIRED LOCAL AUTHORITIES FOR THE INTENDED APPLICATION.

26. PROVIDE SEPARATE RACEWAYS FOR ALL "EMERGENCY" SYSTEM WIRING AND "NORMAL" SYSTEM WIRING. ALL EMERGENCY FEEDERS SHALL BE INSTALLED IN COMPLIANCE WITH NEC 700.9(D) AS ADOPTED BY AUTHORITY HAVING JURISDICTION.

27. ALL RACEWAYS AND CONDUCTOR SIZES SHOWN ARE TO BE INSTALLED WITHIN THE BUILDING STRUCTURE NOT EXPOSED TO OUTDOOR OR EXTREME AMBIENT CONDITIONS. IF RACEWAYS AND CONDUCTORS ARE ROUTED EXPOSED TO OUTDOOR AMBIENT CONDITIONS, CONTRACTOR SHALL DERATE CONDUCTORS AND UPSIZE RACEWAYS BASED ON ENVIRONMENT INSTALLED.

28. RACEWAYS PENETRATING THROUGH ROOF SHALL HAVE ROOF PITCH POCKETS AND FLASHING WITH CAULKING AND PIPE SLEEVE. INSTALLATION SHALL BE WATERTIGHT.

29. PROVIDE EXPANSION AND DEFLECTION FITTINGS FOR CONDUITS CROSSING EXPANSION JOINTS. PROVIDE BONDING JUMPERS FOR ALL EXPANSION FITTINGS.

30. PROVIDE SEPARATE BOXES AND RACEWAYS FOR DIFFERENT VOLTAGE SYSTEMS.

31. DO NOT COMBINE HOMERUNS, EXCEPT AS INDICATED ON THE DRAWINGS.

32. CONTRACTOR SHALL "BALANCE" THE LOADS IN ALL PANELBOARDS TO LESS THAN 10% IMBALANCE BETWEEN THE PHASES.

33. PROVIDE TYPEWRITTEN PANELBOARD SCHEDULES TO PANELBOARD DOORS DEPICTING THE FINAL AS-BUILT CONDITIONS AT PROJECT COMPLETION. INDICATE DIVIDE AND ROOM NAME LOCATION (IE: LIGHTING AT LOBBY BAR).

34. ALL ELECTRICAL SYSTEMS, EQUIPMENT AND COMPONENTS SHALL BE GROUNDED IN ACCORDANCE WITH THE NATIONAL ELECTRIC CODE (NEC) ARTICLE 250 AND AS INDICATED ON DOCUMENTS.

35. ALL FLOOR MOUNTED ELECTRICAL DISTRIBUTION EQUIPMENT SHALL HAVE A 4" HIGH HOUSEKEEPING PAD EXTENDING 4" OUTSIDE THE EQUIPMENT FOOTPRINT IN ALL DIRECTIONS.

36. ALL ELECTRICAL DISTRIBUTION EQUIPMENT SHALL BE INSTALLED IN COMPLIANCE WITH NEC 110.26 CLEAR WORKING SPACE REQUIREMENTS.

37. VERIFY WITH PROJECT STRUCTURAL ENGINEER OR RETAIN THE SERVICES OF LICENSED STRUCTURAL ENGINEER TO PROVIDE ANY MOUNTING DIAGRAMS OR CALCULATIONS REQUIRED FOR MOUNTING OF ELECTRICAL EQUIPMENT PRIOR TO ROUGH-IN. ALL COSTS ARE TO BE INCLUDED IN BASE BID.

38. PROVIDE ALL NECESSARY MOUNTING SUPPORTS FOR LIGHTING FIXTURES. WHERE FIXTURES ARE INSTALLED IN SUSPENDED CEILING SYSTEMS, SECURE FIXTURES TO CEILING FRAME SYSTEM AND PROVIDE FIXTURE SUPPORTS INDEPENDENT OF CEILING SUSPENSION SYSTEM AS REQUIRED PER APPLICABLE CODE.

39. RECESSED FIXTURES IN FIRE RATED CEILINGS AND RETURN AIR PLENUMS SHALL BE RATED FOR THE FIRE RATING OF THE CEILING OR SHALL BE FULLY ENCLOSED IN A FIRE RATED HOUSING ACCEPTABLE TO AUTHORITY HAVING JURISDICTION.

40. VERIFY TYPE OF MOUNTING REQUIRED FOR ALL LIGHTING FIXTURES AND PROVIDE ALL MOUNTING HARDWARE REQUIRED FOR A COMPLETE INSTALLATION.

41. ALL ADJUSTABLE FIXTURES SHALL BE LOCATED AND PROPERLY AIMED AS DIRECTED BY THE ARCHITECT OR LIGHTING DESIGNER. ALL AIMING OF BUILDING FACADE LIGHTING SHALL BE PERFORMED BY CONTRACTOR AT NIGHT.

42. CONTRACTOR SHALL BE RESPONSIBLE FOR CORRECT SIZING AND INSTALLATION OF ALL OUTLET, PULL AND JUNCTION BOXES IN ACCORDANCE WITH NFPA 70. ALL BOXES SHALL BE RECESSED WITH COVER PLATE TO SUIT THE INTENDED APPLICATION.

43. ALL ELECTRICAL EQUIPMENT SHALL HAVE SUFFICIENT CONDUIT AND GUTTER SPACE LUGS AND KNOCKOUTS TO ACCOMMODATE QUANTITY AND SIZE OF CONDUCTORS AND CONDUIT REQUIRED. PROVIDE EQUIPMENT WITH OVERSIZED ENCLOSURES WHERE REQUIRED.

44. WHERE MOTORS ARE INSTALLED IN HUNG CEILINGS, PROVIDE DISCONNECT SWITCH IN HUNG CEILING, WITHIN REACH FROM ACCESS POINT.

45. SIZING OF MOTOR-RELATED ELECTRICAL COMPONENTS, INCLUDING FEEDERS, BRANCH CIRCUITS AND OVER-CURRENT PROTECTION ARE BASED ON RATINGS INDICATED. VERIFY "ACTUAL" MOTOR AND APPLIANCE RATINGS AND LOADS AND PROVIDE CORRECTLY SIZED MOTOR-RELATED ELECTRICAL COMPONENTS. REFLECT ALL CHANGES IN THE RECORD DRAWINGS.

46. ALL WIRE AND CONDUIT CALL OUTS SHOWN ARE FOR THE ENTIRE CIRCUIT LENGTH UNLESS SPECIFICALLY NOTED OTHERWISE.

47. PROVIDE ALL REQUIRED SUPPORTS FOR CONDUCTORS IN VERTICAL RACEWAYS PER NEC 300.19.

48. COORDINATE ALL AUXILIARY WORK WITH OWNER'S NETWORK ADMINISTRATOR, OWNER'S SELECTED TELE/DATA CONSULTANTS, TELEPHONE VENDOR, OWNER'S A/V CONSULTANT, FIRE ALARM DESIGN/BUILD CONTRACTOR, OWNER'S SECURITY CONSULTANT AND THEIR ASSOCIATED DRAWINGS PRIOR TO BID AND ROUGH-IN. INCLUDE ALL COSTS FOR SYSTEMS BASE BID.

49. COORDINATE ALL LIGHTING, LIGHT FIXTURE TYPES AND LOCATIONS, ELECTRICAL DEVICES, AND TELE/DATA DEVICES WITH LIGHTING CONSULTANTS, KITCHEN CONSULTANTS, ARCHITECT AND INTERIOR DESIGN CONSULTANTS PRIOR TO SUBMITTING BID AND ROUGH-IN. INCLUDE ALL COSTS FOR IN BASE BID.

50. PROVIDE ALL REQUIRED MOTOR STARTERS, OVER-CURRENT AND DISCONNECTION MEANS FOR EQUIPMENT SPECIFIED BY OTHER DISCIPLINES, WHETHER SPECIFICALLY INDICATED ON THESE DRAWINGS OR NOT. DEVICE WILL HAVE APPROPRIATE SIZE, NUMBER OF POLES AND NEMA RATING FOR INTENDED APPLICATION.

51. PROVIDE HACR TYPE CIRCUIT BREAKERS FOR HVAC EQUIPMENT. VERIFY SIZE WITH MECHANICAL EQUIPMENT SUPPLIER AND/OR MANUFACTURER.

52. PROVIDE UL LISTED FIRESTOP SYSTEMS AT ALL FIRE, DRAFT AND SMOKE WALLS, CEILINGS, FLOORS AND BARRIERS. COORDINATE WITH OTHER CONTRACTORS TO MINIMIZE PENETRATIONS. PROVIDE UL COMPLIANCE SHEETS FOR TYPES OF SYSTEMS USED.

53. ALL CONDUIT SHALL BE RIGID ALUMINUM UNO. EMT CONDUIT IS NOT ALLOWED. PROVIDE EXPANSION FITTINGS IN CONDUIT FOR EACH 100 FEET OF STRAIGHT CONDUIT.

REV.	DATE	DESCRIPTION	BY
0	03/11/2026	ISSUED FOR BID	JCL

STATE OF LOUISIANA
JOHN C. LAWRENCE
REG. NO. 27941
REGISTERED PROFESSIONAL ENGINEER IN ELECTRICAL ENGINEERING
3-11-2026

wsp USA Inc.
ONE PENN PLAZA, 11TH FLOOR,
NEW YORK, NY 10119
CERTIFICATE OF RECORDATION # EF.2000623

FIRM No: LA - EF. 0003709
Infinity Engineering Consultants, LLC
Civil | Structural | Mechanical | Electrical | Marine | Transportation
New Orleans, LA www.infinityec.com 504.304.0568

DATE	03/11/2026	JOB NO.	22-017

DESIGNED BY: J. LAWRENCE
FILE NAME: E1.00 GENERAL NOTES.dwg

SEWERAGE AND WATER BOARD OF NEW ORLEANS

CONTRACT No. 1444

WEST POWER COMPLEX @ CWPT
FUEL OIL DELIVERY SYSTEM

ELECTRICAL

GENERAL NOTES

DR.	R. BOUDREAUX
CK:	J. LAWRENCE
AP:	J. LAWRENCE
LAST EDIT:	
SCALE:	AS NOTED
DATE:	03/11/2026

A/E DWG NO.
E1.00

DWG. No. 12196-W-24

SET NO: SHEET NO: 47 OF 72

BID PACKAGE - NOT FOR CONSTRUCTION

ONE-LINE DIAGRAM LEGEND

- STATUS INDICATING LIGHT COLOR AND FUNCTION AS NOTED
- THERMAL MAGNETIC CIRCUIT BREAKER AMPS FRAME, TRIP, AND POLES AS NOTED
- MCP — MOTOR CIRCUIT PROTECTOR TYPE CIRCUIT BREAKER AMPS FRAME, CONTINUOUS, MAG TRIP, AND POLES AS NOTED
- 10 — MOTOR – HORSEPOWER AS NOTED
- 600/5 3 — METERING CURRENT TRANSFORMER RATIO AND QUANTITY AS NOTED
- ELECTRICAL EQUIPMENT ENCLOSURE FUNCTION AS NOTED
- H O A — MAINTAINED 3 POSITION SELECTOR SWITCH
- MOMENTARY PUSHBUTTON SWITCH
- POWER TRANSFORMER VOLTAGE AND RATING AS NOTED
- METERING POTENTIAL TRANSFORMER
- FUSED CONTROL POWER TRANSFORMER, 480VAC PRI, 120VAC SEC, VA RATING AS NOTED
- KWH — UTILITY METER
- POWER RECEPTACLE, RATING AND POLES AS NOTED
- ELECTRICAL GROUND
- LIGHTNING ARRESTOR
- CARTRIDGE TYPE FUSE, CLASS, VOLTS, AMPS AS NOTED
- FUSED CUTOUT SWITCH POLE MOUNTED
- PILOT DEVICE ENCLOSURE FUNCTION OR SYMBOL AS NOTED
- DISCONNECT SWITCH, RATING AND POLES AS NOTED
- POLE MOUNTED WEATHERHEAD TYPE SERVICE ENTRANCE
- DELTA CONNECTED TRANSFORMER WINDINGS
- WYE CONNECTED TRANSFORMER WINDINGS
- FVNR SIZE 1 — FULL VOLTAGE NON-REVERSING STARTER WITH THERMAL OVERLOAD (NEMA SIZE INDICATED)
- M — MOTOR STARTER COIL
- C — LIGHTING CONTACTOR COIL
- CONTACTOR SIZE 2 — LIGHTING CONTACTOR, SIZE AS SHOWN
- MOTOR SPACE HEATER
- DRAWOUT CIRCUIT BREAKER
- PE — PHOTOELECTRIC CELL

SCHEMATIC DIAGRAM LEGEND

- PUSH BUTTON NORMALLY CLOSED
- PUSH BUTTON NORMALLY OPEN
- 2 POSITION SELECTOR SWITCH
- 3 POSITION SELECTOR SWITCH
- PRESSURE SWITCH N.C. OPENS ON RISING PRESSURE
- PRESSURE SWITCH N.O. CLOSES ON RISING PRESSURE
- LEVEL SWITCH N.C. OPENS ON RISING LEVEL
- LEVEL SWITCH N.O. CLOSES ON RISING LEVEL
- TEMPERATURE SWITCH N.C. OPENS ON RISING TEMPERATURE
- TEMPERATURE SWITCH N.O. CLOSES ON RISING TEMPERATURE
- CONTACT NORMALLY OPEN
- CONTACT NORMALLY CLOSED
- O.L. — MOTOR OVERLOAD THERMAL CONTACT
- TIME DELAY ON ENERGIZE CONTACT (TIMED TO OPEN)
- TIME DELAY ON ENERGIZE CONTACT (TIMED TO CLOSE)
- TIME DELAY ON DE-ENERGIZE CONTACT (TIMED TO CLOSE)
- TIME DELAY ON DE-ENERGIZE CONTACT (TIMED TO OPEN)
- FLOW SWITCH N.C. OPENS ON FLOW
- FLOW SWITCH N.O. CLOSES ON FLOW
- LIMIT SWITCH N.C. OPENS AT LIMIT
- LIMIT SWITCH N.O. CLOSES AT LIMIT
- SPDT SWITCH
- SPST SWITCH
- SV — SOLENOID VALVE
- SPACE HEATER ELEMENT
- FUSE (SIZE INDICATED)
- SINGLE PHASE MAGNETIC CORE XFMR (VOLTS & RATING AS INDICATED)
- WIRE TAP
- WIRE CROSSING NO CONNECTION
- FIELD WIRING REMOTE FROM MOTOR STARTER
- OPERATING COILS- M=MOTOR STARTER COIL, TDR=TIME DELAY RELAY, CR=CONTROL RELAY, C=CONTACTOR
- PILOT LIGHT (COLOR INDICATED)
- TERMINAL BLOCK
- WIRING TERMINAL
- GROUND
- MOTOR POWER THERMAL OVERLOAD
- HORN
- SOLENOID VALVE OPERATOR
- FD — FIRE DETECTOR

GENERAL & PLAN LEGEND

- ABOVE GROUND CONDUIT
- UNDERGROUND CONDUIT
- T/C — TELEPHONE/COMMUNICATION AND DATA CONDUIT
- G — GROUND WIRE
- OHP — OVERHEAD POWER LINE
- SPECIAL PURPOSE RECEPTACLE
- ELECTRIC MOTOR
- CONDUIT UNION OR HUB CONNECTOR
- CONDUIT "T" FITTING
- CONDUIT "L" FITTING
- CONDUIT EXPANSION JOINT
- LIQUIDTIGHT FLEXIBLE METALLIC CORE CONDUIT
- CONDUIT CAP OR PLUG
- CONDUIT TURNING AWAY FROM VIEWER
- CONDUIT TURNING TOWARD & GOING PAST VIEWER
- GROUND WIRE LUGS AND CADWELD
- RECEPTACLE – SINGLE OUTLET 20A, 120V (U.N.O.)
- RECEPTACLE – DUPLEX 20A, 120V (U.N.O.)
- G — RECEPTACLE – DUPLEX G.F.C.I., 20A, 120V (U.N.O.)
- IG/SP — RECEPTACLE – DUPLEX ISOLATED GROUND SURGE SUPPRESSION
- STANCHION MOUNTED LIGHT FIXTURE
- PENDANT MOUNTED LIGHT FIXTURE
- BRACKET/WALL MOUNTED LIGHT FIXTURE
- CEILING MOUNTED LIGHT FIXTURE
- UTILITY POWER POLE
- ANTENNA
- XP — SINGLE RECEPTACLE (EXPLOSION PROOF)
- CONDUIT BOX, C-H TYPE "GUAC"
- CONDUIT BOX, C-H TYPE "GUAT"
- CONDUIT BOX, C-H TYPE "GUAX"
- FLOODLIGHT, C-H TYPE "FMVS"
- G — EYEWASH STATION LIGHTING C-H TYPE "EVBX" WITH 60W GREEN LAMP
- T — THERMOSTAT
- TELEPHONE OUTLET
- $ — SINGLE POLE TOGGLE SWITCH 20A, 120/277V, MTD 48" AFF
- $2 — DOUBLE POLE TOGGLE SWITCH 20A, 120/277V, MTD 48" AFF
- $3 — 3-WAY TOGGLE SWITCH 20A, 120/277V, MTD 48" AFF
- GROUND ROD
- GROUNDWELL
- N — AID TO NAVIGATION LIGHTING FIXTURE
- PB — PULL BOX
- LC — LIGHTING CONTROL CONTACTOR
- XFMR — TRANSFORMER
- PE — PHOTOELECTRIC CELL
- SAFETY SWITCH
- MOMENTARY CONTACT PUSHBUTTON CONTROL STATION
- SINGLE POLE BREAKER
- TWO POLE BREAKER
- THREE POLE BREAKER
- CABLE TRAY

ABBREVIATIONS

A – AMBER OR AMPERE
AC – AMPERE CONTINUOUS
AF – AMPERE FRAME
AM – AMPERE METER
AT – AMPERE TRIP
BOT – BOTTOM
C – CONTACTOT
CPT – CONTROL POWER TRANSFORMER
CR – CONTROL RELAY
CT – CURRENT TRANSFORMER
DPST – DOUBLE POLE SINGLE THROW
DPDT – DOUBLE POLE DOUBLE THROW
DS – DISCONNECT SWITCH
FBO – FURNISHED BY OTHERS
FVNR – FULL VOLTAGE NON-REVERSING
FVR – FULL VOLTAGE REVERSING
GFI – GROUND FAULT INTERRUPTOR
GFCI – GROUND FAULT CIRCUIT INTERRUPT
GND – GROUND
HOA – HAND-OFF-AUTO
JB or J-BOX – JUNCTION BOX
kWH – KILOWATT HOUR
LP – LIGHTING PANEL
LS* – LEVEL SWITCH
MCC – MOTOR CONTROL CENTER
MCP – MOTOR CIRCUIT PROTECTOR
MLO – MAIN LUGS ONLY
MS – MOTOR STARTER
N.C. – NORMALLY CLOSED
N.I.C. – NOT IN CONTRACT
N.O. – NORMALLY OPEN
NVR – NETWORK VIDEO RECORDER
PNL – PANEL
PC – PHOTOCELL CONTROL
PP – POWER PANEL
POE – POWER OVER ETHERNET
PS* – PRESSURE SWITCH
PT – POTENTIAL TRANSFORMER
S/N – SOLID NEUTRAL
S/S – START/STOP
SPST – SINGLE POLE SINGLE THROW
SPDT – SINGLE POLE DOUBLE THROW
SWRK – SWITCHRACK
T OR XFMR – TRANSFORMER
TDR – TIME DELAY RELAY
TOS – TOP OF SLAB/TOP OF STEEL
UNO – UNLESS NOTED OTHERWISE
TS* – TEMPERATURE SWITCH
TVSS – TRANSIENT VOLTAGE SURGE SUPPRESSOR
V – VOLT/VOLTAGE
VFD – VARIABLE FREQUENCY DRIVE
VM – VOLT METER
W – WATT/WATTAGE
* – L(LOW) OR H(HIGH)

CONDUIT & CABLE SCHEDULE LEGEND

- P-XXX — POWER CABLE & CONDUIT NUMBER
- C-XXX — CONTROL CABLE & CONDUIT NUMBER
- PC-XXX — POWER & CONTROL CABLE & CONDUIT NUMBER
- I-XXX — INSTRUMENT CABLE & CONDUIT NUMBER

CLOSED CIRCUIT TELEVISION (CCTV) SYSTEM

SYMBOL	BACKBOX	MOUNTING HEIGHT TO CENTERLINE	POWER	DESCRIPTION
SC	PER VENDOR DRAWINGS	CEILING	PER MFG SPEC	CEILING MOUNTED COLOR CAMERA w/PAN-TILT-ZOOM FOR GENERAL SECURITY
SC	PER VENDOR DRAWINGS	PER VENDOR DRAWINGS	PER MFG SPEC	WALL MOUNTED COLOR CAMERA w/PAN-TILT-ZOOM FOR GENERAL SECURITY
SC	PER VENDOR DRAWINGS	CEILING	PER MFG SPEC	CEILING MOUNTED FIXED COLOR CAMERA FOR GENERAL SECURITY
SC	PER VENDOR DRAWINGS	PER VENDOR DRAWINGS	PER MFG SPEC	WALL MOUNTED FIXED COLOR CAMERA FOR GENERAL SECURITY
PC	PER VENDOR DRAWINGS	CEILING	PER MFG SPEC	CEILING MOUNTED COLOR CAMERA w/VARIFOCAL LENSES FOR EXTERIOR BOUNDARY PENETRATION SECUIRTY
PC	PER VENDOR DRAWINGS	PER VENDOR DRAWINGS	PER MFG SPEC	WALL MOUNTED COLOR CAMERA w/VARIFOCAL LENSES FOR EXTERIOR BOUNDARY PENETRATION SECUIRTY
SM	PER VENDOR DRAWINGS	PER VENDOR DRAWINGS	120 VAC	COLOR MONITOR FOR GENERAL SECURITY OBSERVATION
SM	PER VENDOR DRAWINGS	PER VENDOR DRAWINGS	120 VAC	COLOR MONITOR FOR EXTERIOR BOUNDARY PENETRATION SECURITY OBSERVATION
SER	PER VENDOR DRAWINGS	N/S	120 VAC	SECURITY EQUIPMENT RACK
360°	PER VENDOR DRAWINGS	PER VENDOR DRAWINGS	PER MFG SPEC	SECURITY CEILING MOUNTED COLOR CAMERA, 360° CAMERA LENS FOR HIGH SECURITY

REV.	DATE	DESCRIPTION	BY
0	03/11/2026	ISSUED FOR BID	JCL

STATE OF LOUISIANA
JOHN C. LAWRENCE
REG. NO. 27941
REGISTERED PROFESSIONAL ENGINEER IN ELECTRICAL ENGINEERING
3-11-2026

WSP USA Inc.
ONE PENNSYLVANIA PLAZA 37TH FLOOR
NEW YORK, NY 10119
CERTIFICATE OF REGISTRATION # EF.0000623

Infinity Engineering Consultants, LLC
FIRM No: LA – EF. 0003709
Civil | Structural | Mechanical | Electrical | Marine | Transportation
Metairie, LA www.infinityec.com 504-304-0548

DATE	03/11/2026	JOB NO.	22-017

DESIGNED BY: J. LAWRENCE
FILE NAME: E1.00 GENERAL NOTES.dwg

SEWERAGE AND WATER BOARD OF NEW ORLEANS

CONTRACT No. 1444
WEST POWER COMPLEX @ CWPT
FUEL OIL DELIVERY SYSTEM

ELECTRICAL

GENERAL LEGEND & ABBREVIATIONS

DR:	R. BOUDREAUX
CK:	J. LAWRENCE
AP:	J. LAWRENCE
LAST EDIT:	
SCALE:	AS NOTED
DATE:	03/11/2026

A/E DWG NO. E1.10

DWG. No. 12196-W-24

SET NO: SHEET NO: 48 OF 72

BID PACKAGE - NOT FOR CONSTRUCTION

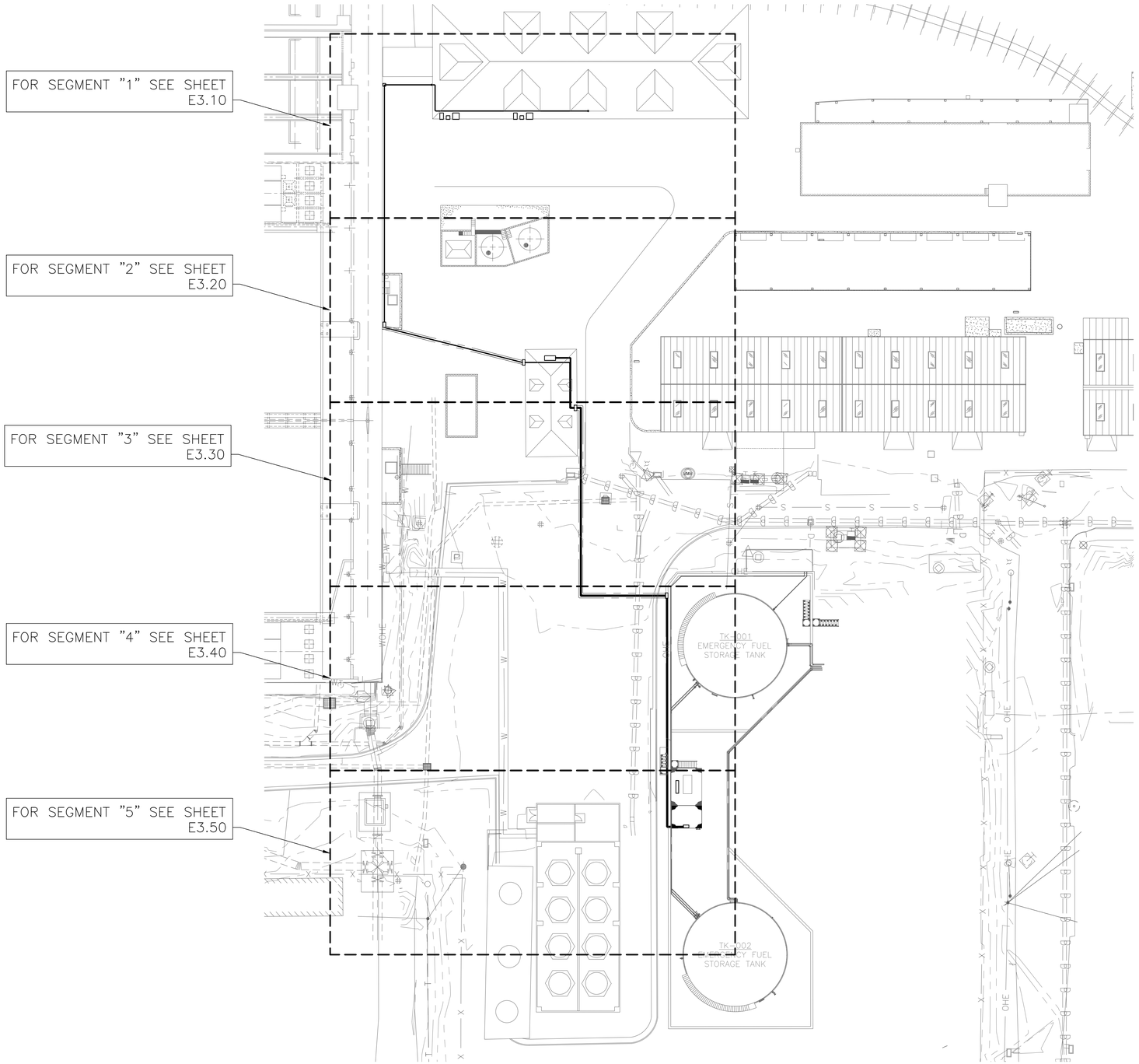

ELECTRICAL KEY PLAN

SCALE: 1/32" = 1'-0"

0 16' 32' 64'

SCALE: 1/32" = 1'-0"

BID PACKAGE - NOT FOR CONSTRUCTION

REV.	DATE	DESCRIPTION	BY
0	03/11/2026	ISSUED FOR BID	JCL

STATE OF LOUISIANA
JOHN C. LAWRENCE
REG. NO. 27941
REGISTERED PROFESSIONAL ENGINEER IN ELECTRICAL ENGINEERING
3-11-2026

WSP USA INC.
ONE PENN PLAZA, 4TH FLOOR,
NEW YORK, NY 10119
CERTIFICATE OF REGISTRATION # EF.0000923

Infinity Engineering Consultants, LLC
AEC Project No. 21-017
Civil | Structural | Mechanical | Electrical | Marine | Transportation
Metairie, LA www.infinityec.com 504-304-0548
FIRM No: LA – EF. 0003709

DATE	03/11/2026	JOB NO.	22-017
DESIGNED BY: J. LAWRENCE			
FILE NAME: E3.00 ELECTRICAL KEY PLAN.dwg			

SEWERAGE AND WATER BOARD OF NEW ORLEANS

CONTRACT No. 1444

WEST POWER COMPLEX @ CWPT
FUEL OIL DELIVERY SYSTEM

ELECTRICAL

ELECTRICAL KEY PLAN

DR.	R. BOUDREAUX
CK:	J. LAWRENCE
AP:	J. LAWRENCE
LAST EDIT:	
SCALE:	AS NOTED
DATE:	03/11/2026

A/E DWG NO. E3.00

DWG. No. 12196-W-24

SET NO: SHEET NO: 49 OF 72

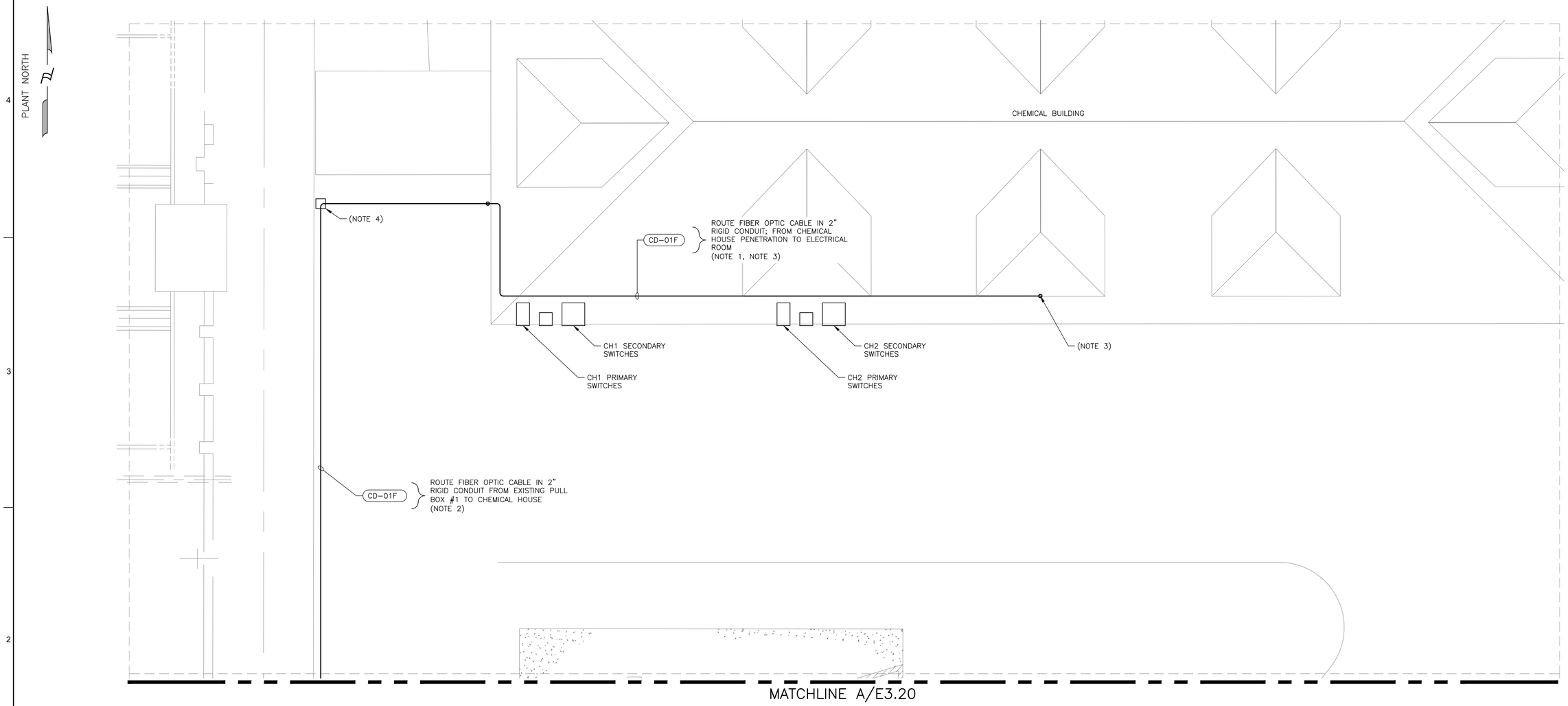

NOTES:

1. RUN CONDUIT OVERHEAD INSIDE BUILDING.
2. RUN ON OUTSIDE OF CONTAINMENT WALL.
3. RUN CONDUIT TO FIBER CABLE JUNCTION BOX LOCATED OUTSIDE ELECTRICAL ROOM; COORDINATE WITH OWNER'S IT GROUP FOR FIBER AND TERMINATIONS.
4. CONTRACTOR TO PROVIDE ADDITIONAL PULL BOXES AS REQUIRED.

ELECTRICAL PLAN 1

SCALE: 1/8" = 1'-0"

0 4' 8' 16'

SCALE: 1/8" = 1'-0"

REV.	DATE	DESCRIPTION	BY
0	03/11/2026	ISSUED FOR BID	JCL

STATE OF LOUISIANA
JOHN C. LAWRENCE
REG. NO. 27941
REGISTERED PROFESSIONAL ENGINEER IN ELECTRICAL ENGINEERING
3-11-2026

WSP USA INC.
ONE PENN PLAZA, 4TH FLOOR,
NEW YORK, NY 10119
CERTIFICATE OF REGISTRATION # EF.2000923

FIRM No: LA – EF. 0003109
Infinity Engineering Consultants, LLC
Civil | Structural | Mechanical | Electrical | Marine | Transportation
Metairie, LA www.infinityec.com 504-304-0548

DATE	03/11/2026	JOB NO.	22-017

DESIGNED BY: J. LAWRENCE
FILE NAME: E3.00 ELECTRICAL KEY PLAN.dwg

SEWERAGE AND WATER BOARD OF NEW ORLEANS

CONTRACT No. 1444

WEST POWER COMPLEX @ CWPT
FUEL OIL DELIVERY SYSTEM

ELECTRICAL

ELECTRICAL PLAN 1

DR:	R. BOUDREAUX
CK:	J. LAWRENCE
AP:	J. LAWRENCE
LAST EDIT:	
SCALE:	AS NOTED
DATE:	03/11/2026

A/E DWG NO. E3.10

DWG. No. 12196-W-24

SET NO: SHEET NO: 50 OF 72

BID PACKAGE - NOT FOR CONSTRUCTION

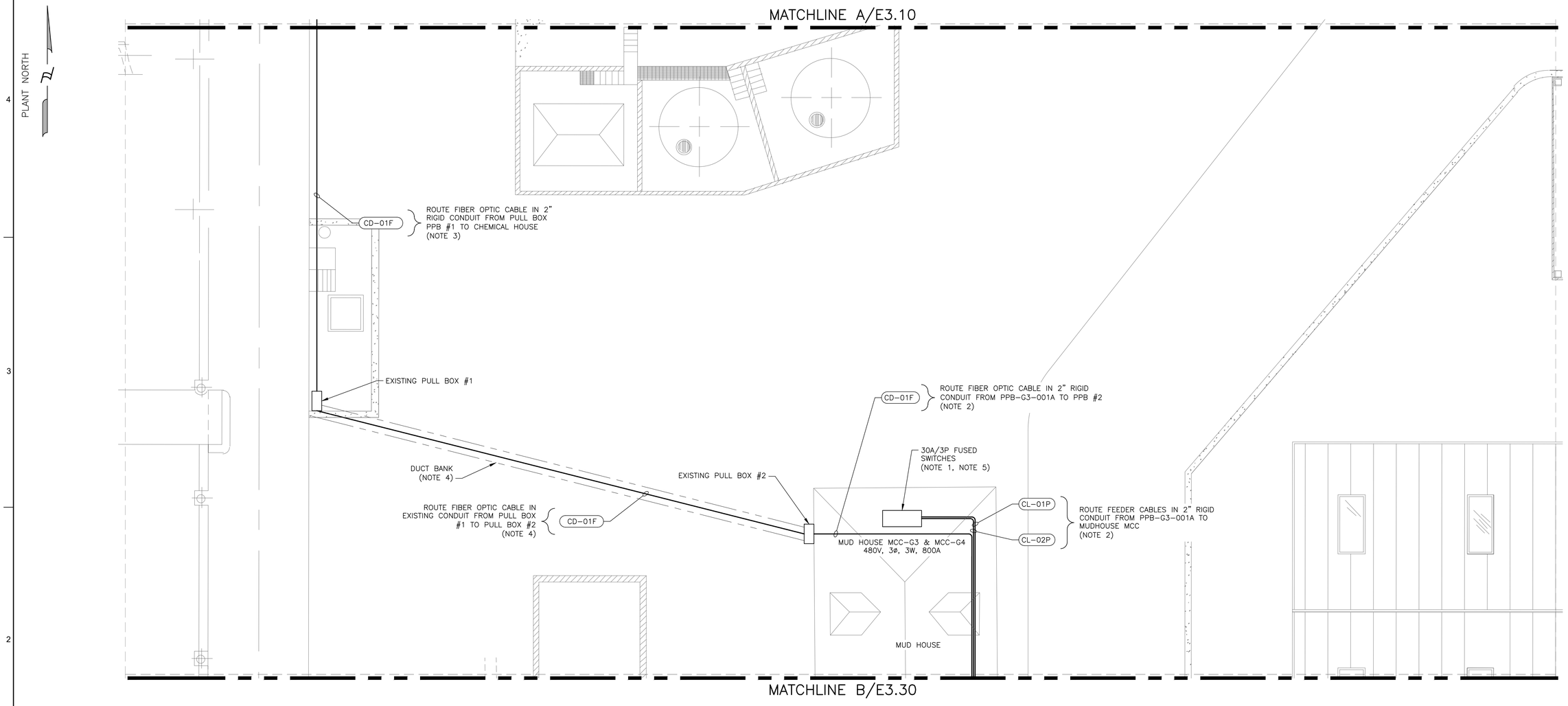

ELECTRICAL PLAN 2

SCALE: 1/8" = 1'-0"

0 4' 8' 16'

SCALE: 1/8" = 1'-0"

NOTES:

1. USE SPARE 30A/3PH SWITCHES IN EXISTING MCC-G3 & MCC-G4.
2. RUN OVERHEAD INSIDE OF BUILDING
3. RUN ON OUTSIDE OF CONTAINMENT WALL.
4. RUN FIBER OPTIC CABLE IN EXISTING UNDERGROUND DUCT BANK SPARE CONDUIT. DUCT BANK SHOWN IN APPROXIMATE LOCATION, CONTRACTOR TO VERIFY LOCATION AND CONDUIT AVAILABILITIES.

REV.	DATE	DESCRIPTION	BY
0	03/11/2026	ISSUED FOR BID	JCL

STATE OF LOUISIANA
JOHN C. LAWRENCE
REG. NO. 27941
REGISTERED PROFESSIONAL ENGINEER IN ELECTRICAL ENGINEERING
3-11-2026

WSP USA Inc.
ONE PENN PLAZA, 11TH FLOOR
NEW YORK, NY 10119
CERTIFICATE OF REGISTRATION # EF.0000023

FIRM No LA - EF. 0003109
Infinity Engineering Consultants, LLC
Civil | Structural | Mechanical | Electrical | Marine | Transportation
Metairie, LA www.infinityec.com 504-304-0148

DATE	03/11/2026	JOB NO.	22-017

DESIGNED BY: J. LAWRENCE
FILE NAME: E3.00 ELECTRICAL KEY PLAN.dwg

SEWERAGE AND WATER BOARD OF NEW ORLEANS

CONTRACT No. 1444

WEST POWER COMPLEX @ CWPT
FUEL OIL DELIVERY SYSTEM

ELECTRICAL

ELECTRICAL PLAN 2

DR:	R. BOUDREAUX
CK:	J. LAWRENCE
AP:	J. LAWRENCE
LAST EDIT:	
SCALE:	AS NOTED
DATE:	03/11/2026

A/E DWG NO. E3.20

DWG. No. 12196-W-24

SET NO: SHEET NO: 51 OF 72

BID PACKAGE - NOT FOR CONSTRUCTION

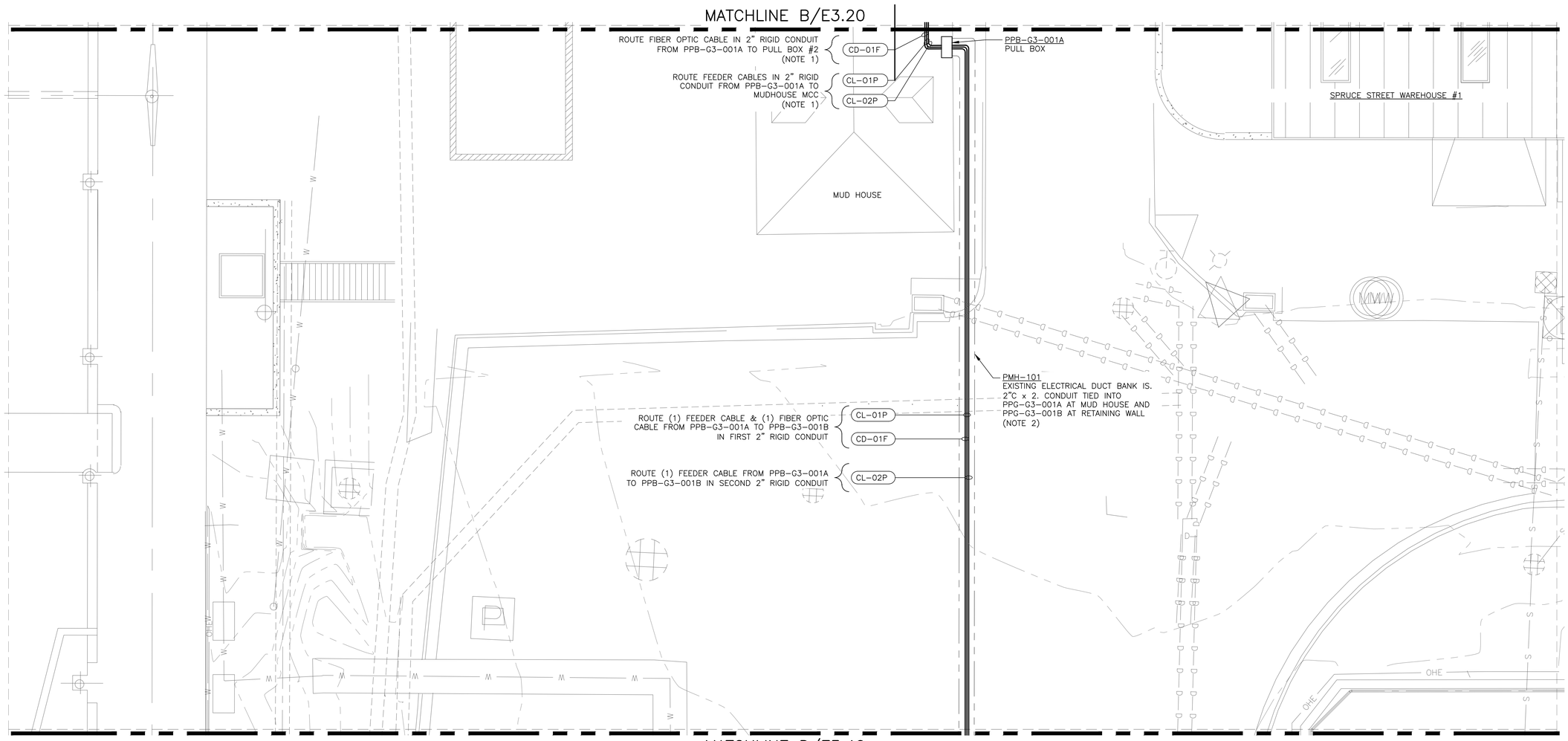

NOTES:
1. RUN OVERHEAD INSIDE BUILDING.
2. EXISTING UNDERGROUND CONCRETE ENCASED DUCT BANK APPROXIMATE LOCATION; CONTRACTOR TO VERIFY LOCATION AND CONDUIT AVAILABILITIES.

ELECTRICAL PLAN 3

SCALE: 1/8" = 1'-0"

0 4' 8' 16'

SCALE: 1/8" = 1'-0"

REV.	DATE	DESCRIPTION	BY
0	03/11/2026	ISSUED FOR BID	JCL

STATE OF LOUISIANA
JOHN C. LAWRENCE
REG. NO. 27941
REGISTERED PROFESSIONAL ENGINEER IN ELECTRICAL ENGINEERING
3-11-2026

WSP USA Inc.
ONE PENN PLAZA, 4TH FLOOR,
NEW YORK, NY 10119
CERTIFICATE OF REGISTRATION # EF.0000620

Infinity Engineering Consultants, LLC
FIRM No LA – EF. 0003709
Civil | Structural | Mechanical | Electrical | Marine | Transportation
Metairie, LA www.infinitieec.com 504-304-0548

DATE	03/11/2026
JOB NO.	22-017
DESIGNED BY:	J. LAWRENCE
FILE NAME:	E3.00 ELECTRICAL KEY PLAN.dwg

SEWERAGE AND WATER BOARD OF NEW ORLEANS

CONTRACT No. 1444

WEST POWER COMPLEX @ CWPT
FUEL OIL DELIVERY SYSTEM

ELECTRICAL

ELECTRICAL PLAN 3

DR.	R. BOUDREAUX
CK:	J. LAWRENCE
AP:	J. LAWRENCE
LAST EDIT:	
SCALE:	AS NOTED
DATE:	03/11/2026

A/E DWG NO. E3.30

DWG. No. 12196-W-24

SET NO: SHEET NO: 52 OF 72

BID PACKAGE - NOT FOR CONSTRUCTION

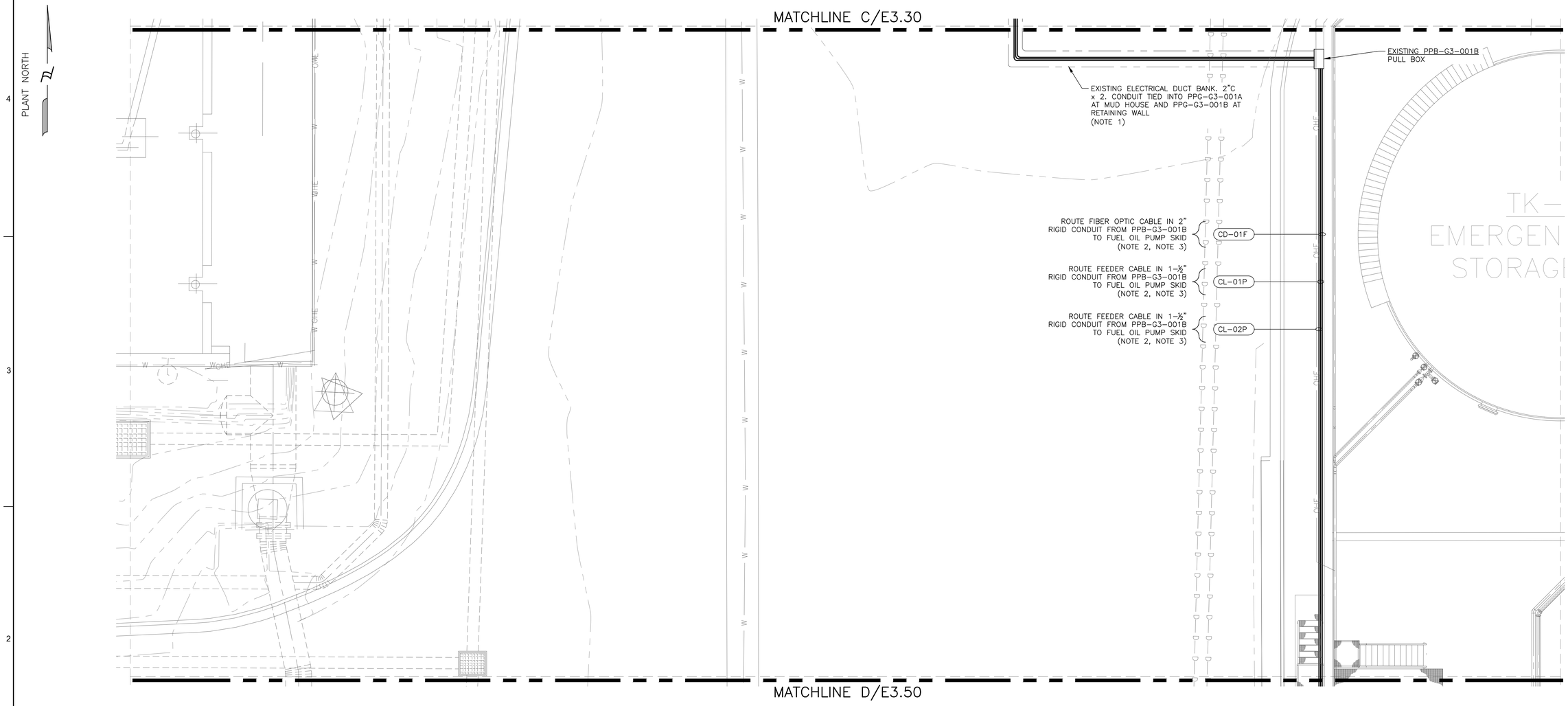

NOTES:

1. EXISTING UNDERGROUND CONCRETE ENCASED DUCT BANK APPROXIMATE LOCATION; CONTRACTOR TO VERIFY LOCATION AND CONDUIT AVAILABILITIES.
2. RUN ON OUTSIDE OF CONTAINMENT WALL.
3. CONDUITS SHALL NOT PENETRATE STORAGE TANK FLOOR INSIDE CONTAINMENT AREA. RUN CONDUITS EXPOSED ALONG CONTAINMENT WALLS.

ELECTRICAL PLAN 4

SCALE: 1/8" = 1'-0"

0 4' 8' 16'

SCALE: 1/8" = 1'-0"

REV.	DATE	DESCRIPTION	BY
0	03/11/2026	ISSUED FOR BID	JCL

STATE OF LOUISIANA
JOHN C. LAWRENCE
REG. NO. 27941
REGISTERED PROFESSIONAL ENGINEER IN ELECTRICAL ENGINEERING
3-11-2026

WSP USA Inc.
ONE PENN PLAZA, 4TH FLOOR,
NEW YORK, NY 10119
CERTIFICATE OF REGISTRATION # EF.2000623

FIRM No: LA – EF. 0003709
Infinity Engineering Consultants, LLC
Civil | Structural | Mechanical | Electrical | Marine | Transportation
Metairie, LA www.infinityec.com 504-304-0548

DATE	03/11/2026	JOB NO.	22-017

DESIGNED BY: J. LAWRENCE
FILE NAME: E3.00 ELECTRICAL KEY PLAN.dwg

SEWERAGE AND WATER BOARD OF NEW ORLEANS

CONTRACT No. 1444

WEST POWER COMPLEX @ CWPT
FUEL OIL DELIVERY SYSTEM

ELECTRICAL

ELECTRICAL PLAN 4

DR:	R. BOUDREAUX
CK:	J. LAWRENCE
AP:	J. LAWRENCE
LAST EDIT:	
SCALE:	AS NOTED
DATE:	03/11/2026

A/E DWG NO.
E3.40

DWG. No. 12196-W-24

SET NO: SHEET NO: 53 OF 72

BID PACKAGE - NOT FOR CONSTRUCTION

MATCHLINE B/E3.40

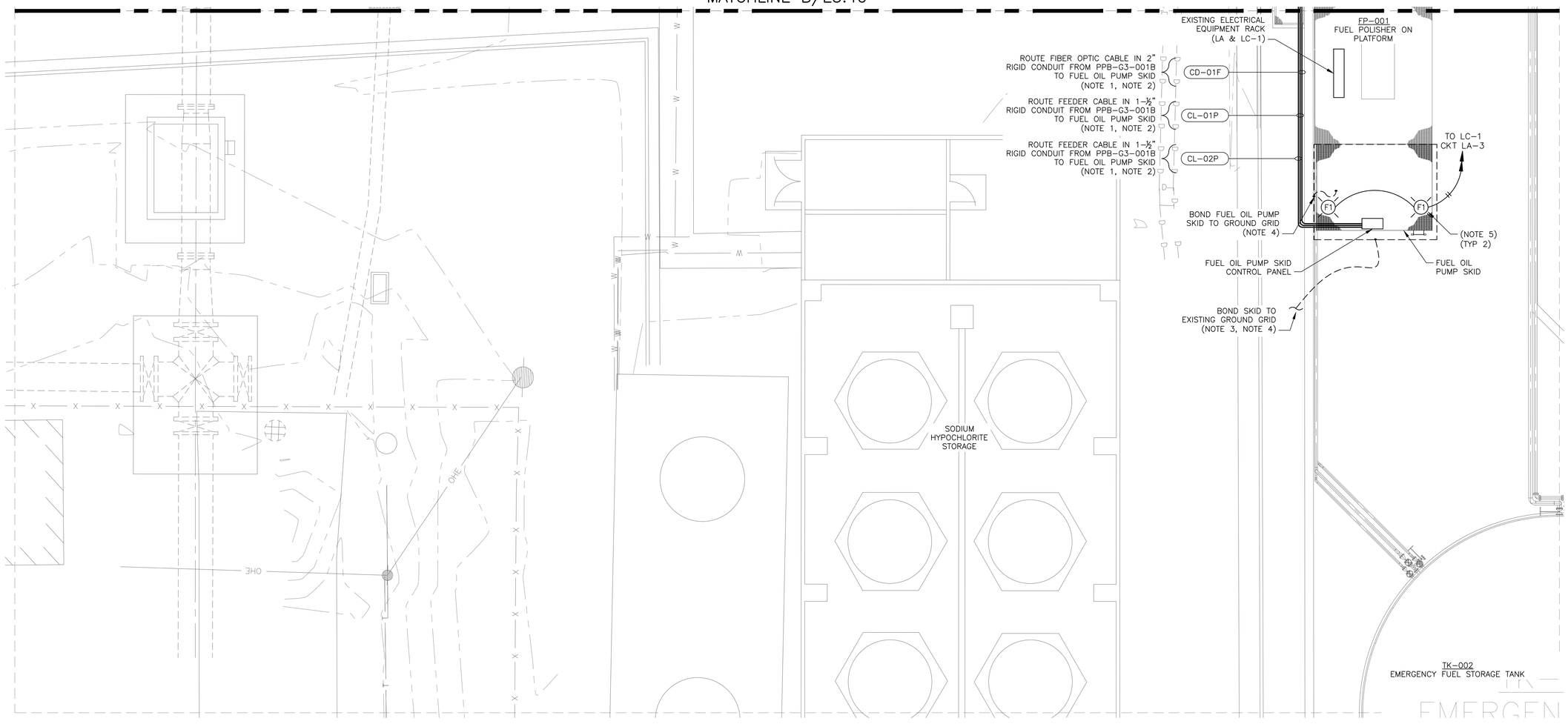

NOTES:

1. RUN ON OUTSIDE OF CONTAINMENT WALL.
2. CONDUITS SHALL NOT PENETRATE STORAGE TANK FLOOR INSIDE CONTAINMENT AREA. RUN CONDUITS EXPOSED ALONG CONTAINMENT WALLS.
3. LOCATE EXISTING GROUND GRID OUTSIDE OF CONTAINMENT PIT, ROUTE 4/0 GROUND AND BOND TO FUEL OIL PUMP SKID.
4. BOND 4/0 GROUND CONDUCTOR TO EXISTING SKID AND ROUTE TO FUEL OIL PIMP SKID.
5. MATCH EXISTING LIGHTING INSTALLATION. CONTRACTOR SHALL TIE INTO EXISTING LIGHTING CIRCUIT.

ELECTRICAL PLAN 5

SCALE: 1/8" = 1'-0"

0 4' 8' 16'

SCALE: 1/8" = 1'-0"

LIGHTING FIXTURE SCHEDULE

TYPE	MANUFACTURER & CATALOG No.	DESCRIPTION	LAMP QTY	TYPE	VOLTS
F1	HAZLUX AH1 LED SERIES #AH1-4-1-K5-R3-1-TG-P-G-U	AREA LIGHT, EPOXY POWDER COATED COPPER FREE ALUMINUM HOUSING, TEMPERED GLASS LENS, CCT=5000k, 6499 LUMENS, POLE MOUNT, WITH SN01 POLE STANCHION MOUNT 10' ALUMINUM SWIVEL POLE CATALOG No. ST7-M2-3000-T-NCT-AL	-	40W LED	120

REV.	DATE	DESCRIPTION	BY
0	03/11/2026	ISSUED FOR BID	JCL

STATE OF LOUISIANA
JOHN C. LAWRENCE
REG. NO. 27941
REGISTERED PROFESSIONAL ENGINEER IN ELECTRICAL ENGINEERING
3-11-2026

WSP USA INC.
ONE PENN PLAZA, 11TH FLOOR, NEW YORK, NY 10119
CERTIFICATE OF REGISTRATION # EF.0000623

Infinity Engineering Consultants, LLC
FIRM No LA – EF. 0003709
Civil | Structural | Mechanical | Electrical | Marine | Transportation
Metairie, LA www.infinityec.com 504-304-0548

DATE	03/11/2026	JOB NO.	22-017

DESIGNED BY: J. LAWRENCE
FILE NAME: E3.00 ELECTRICAL KEY PLAN.dwg

SEWERAGE AND WATER BOARD OF NEW ORLEANS

CONTRACT No. 1444

WEST POWER COMPLEX @ CWPT
FUEL OIL DELIVERY SYSTEM

ELECTRICAL

ELECTRICAL PLAN 5

DR:	R. BOUDREAUX
CK:	J. LAWRENCE
AP:	J. LAWRENCE
LAST EDIT:	
SCALE:	AS NOTED
DATE:	03/11/2026

A/E DWG NO. E3.50

DWG. No. 12196-W-24

SET NO: SHEET NO: 54 OF 72

BID PACKAGE - NOT FOR CONSTRUCTION

SPECIFIC NOTES:

1. ALL CONDUIT AND WIRE TO BE INSTALLED AS NEW UNDER THIS CONTRACT.
2. TERMINATE CABLE WITH MANUFACTURES TERMINATION KITS PER MANUFACTURERS INSTRUCTIONS.
3. CONDUIT SIZE VARIES. SEE PLANS.

CONDUIT / CABLE SCHEDULE

CABLE		CONDUIT		FUNCTION	FROM	TO	ROUTE	REMARKS
TAG No.	CONDUCTORS	TAG No.	SIZE					
CL-01P	3-1/C#6, 1-1/C#8(G)	CL-01P	(NOTE 3)	480V POWER	MUD HOUSE MCC-G3	FUEL OIL PUMP A	UNDERGROUND & EXPOSED	-
CL-02P	3-1/C#6, 1-1/C#8(G)	CL-02P	(NOTE 3)	480V POWER	MUD HOUSE MCC-G4	FUEL OIL PUMP B	UNDERGROUND & EXPOSED	-
CD-01F	1-6 STRAND FIBER OPTIC CABLE 8.9 MICRON	CD-01F	(NOTE 3)	COMMUNICATION / CONTROL	CHEMICAL BUILDING	FUEL OIL SKID	UNDERGROUND & EXPOSED	-

REV.	DATE	DESCRIPTION	BY
0	03/11/2026	ISSUED FOR BID	JCL

STATE OF LOUISIANA
JOHN C. LAWRENCE
REG. NO. 27941
REGISTERED PROFESSIONAL ENGINEER IN ELECTRICAL ENGINEERING
3-11-2026

WSP USA Inc.
ONE PENN PLAZA, 4TH FLOOR,
NEW YORK, NY 10119
CERTIFICATE OF REGISTRATION # EF.2000023

FIRM No: LA – EF. 0003709
Infinity Engineering Consultants, LLC
Civil | Structural | Mechanical | Electrical | Marine | Transportation
Metairie, LA www.infinityec.com 504.304.0548

SEWERAGE AND WATER BOARD OF NEW ORLEANS

CONTRACT No. 1444

WEST POWER COMPLEX @ CWPT
FUEL OIL DELIVERY SYSTEM

ELECTRICAL

CONDUIT-CABLE SCHEDULE

DR:	R. BOUDREAUX
CK:	J. LAWRENCE
AP:	J. LAWRENCE
LAST EDIT:	
SCALE:	AS NOTED
DATE:	03/11/2026

A/E DWG NO. E6.00

DWG. No. 12196-W-24

SET NO: SHEET NO: 55 OF 72

DATE	03/11/2026	JOB NO.	22-017

DESIGNED BY: J. LAWRENCE

FILE NAME: E6.00 CONDUIT-CABLE SCHEDULE.dwg

BID PACKAGE - NOT FOR CONSTRUCTION

VALVE SYMBOLS

- GATE VALVE
- BALL VALVE
- GLOBE VALVE
- PLUG VALVE
- CHECK VALVE
- STOP CHECK VALVE
- NEEDLE VALVE
- BUTTERFLY VALVE
- ANGLE VALVE
- 3 WAY VALVE
- 4 WAY VALVE
- RELIEF VALVE
- DUMP VALVE
- GAUGE GLASS VALVE
- AST OVERFILL VALVE PROTECTION VALVE
- SELF CONTAINED PRESSURE CONTROL VALVE
- AR — AIR RELEASE VALVE
- BACKFLOW PREVENTER
- F — FOOT VALVE
- V — VACUUM BREAKER

VALVE ACTUATOR SYMBOLS

- PISTON OPERATED
- M — MOTOR OPERATED
- AIR OPERATED DIAPHRAM
- S — SOLENOID
- EP — ELECTROPNEUMATIC POSITIONER

PUMP/FAN SYMBOLS

- PUMP (CENTRIFUGAL)
- PUMP - ROTARY/PD
- FAN
- CHEMICAL METERING PUMP
- VFD — VARIABLE FREQUENCY DRIVE

PIPING SYMBOLS

- BREAK FLANGES
- UNION
- CHANGE IN PIPE SIZE (ECCENTRIC)
- CHANGE IN PIPE SIZE (CONCENTRIC)
- SCREWED CAP
- BUTTWELD CAP
- BLIND FLANGE
- MALE CAM LOCK FITTING
- HOSE CONNECTION
- STRIKER PLATE
- SPECTACLE BLIND
- # — VENDOR NOZZLE/CONNECTION NUMBER

INSTRUMENTATION SYMBOLS

- ANNUBAR FLOW ELEMENT
- CLAMP-ON ULTRASONIC FLOW METER
- C — CORIOLIS FLOW ELEMENT
- ORIFICE METER/RESTRICTION ORIFICE
- M — MAGNETIC FLOWMETER
- SG — SIGHT GLASS FLOW INDICATOR
- ROTOMETER
- T — TURBINE FLOWMETER
- VORTEX FLOWMETER
- VENTURI NOZZLE
- THERMOWELL
- PIT — PRESSURE INSTRUMENT WITH ROOT VALVE - REFER TO INSTRUMENT INSTALLATION DETAILS (IC - DRAWINGS) FOR INSTRUMENT VALVE MANIFOLD REQUIREMENTS
- TE — TEMPERATURE ELEMENT WITH THERMOWELL

MISCELLANEOUS INLINE EQUIPMENT

- EXPANSION JOINT
- ROUTE TO NEAREST SANITARY DRAIN INLET
- CP — CONDENSATE POT
- START-UP STRAINER
- INJECTION QUILL
- SPRAY NOZZLE
- STEAM TRAP
- FLEXIBLE HOSE
- MECHANICAL SEAL COOLER
- PIPING/VENT THRU ROOF
- SILENCER
- RELIEF VALVE WITH DRIP PAN ELBOW
- BASKET STRAINER/FILTER
- DUPLEX BASKET STRAINER
- "Y" STRAINER
- SAFETY SHOWER/EYE WASH
- FLAME ARRESTOR
- FLUID HAMMER ARRESTOR
- PLATE/FRAME HEAT EXCHANGER
- DRAIN AFTERCOOLER
- HB — HOSE BIBB
- OVERFLOW VENT

LINE CONTINUATION DESIGNATION

- TO/FROM P999
- HPS FROM STEAM HEADER
- DESCRIPTION
- CONTINUATION DRAWING NUMBER
- A — SAME-SHEET CONTROLS CONTINUATION
- TIE-IN POINT

CONTROLS SYMBOLOGY

- FIELD MOUNTED DISCRETE INSTRUMENT
- LOCAL PANEL MOUNTED INSTRUMENT
- PLANT SCADA SYSTEM (PSS)
- VENDOR-FURNISHED PLC CONTROL
- INTERLOCK
- < — LOW SELECT
- MID — MID SELECT
- > — HIGH SELECT
- Σ — SUM
- 2oo2 — 2 OUT OF 2 VOTE
- 2oo3 — 2 OUT OF 3 VOTE
- Σ/n — AVERAGE
- OR — "OR" SELECT

INSTRUMENT LINE TYPE INDENTIFICATION

- ELECTRICAL SIGNAL
- PNEUMATIC SIGNAL
- CAPILLARY TUBING
- HYDRAULIC
- COMMUNICATIONS LINK / SOFTWARE

INSTRUMENT & CONTROL VALVE TAG NUMBERING

TC - 11050A

- SUFFIX - OPTIONAL
- PROCESS LOOP NUMBER (REFER TO TABLE AT FAR RIGHT)
- FUNCTION (REFER TO TABLE AT FAR RIGHT)

EQUIPMENT ABBREVIATION CODE

ACWP	AUXILIARY COOLING WATER PUMP
AD	AIR DRYER
AS	AIR SEPARATOR
CEMS	CONTINUOUS EMISSIONS MONITORING SYSTEM
CSF	CHEMICAL SHOT FEEDER
CTG	COMBUSTION TURBINE-GENERATOR
CWP	COOLING WATER PUMP
ET	EXPANSION TANK
F	FAN
FGC	FUEL GAS COMPRESSOR
FL	FILTER-SEPARATOR
FOP	FUEL OIL PUMP
HX	HEAT EXCHANGER
IAC	INSTRUMENT AIR COMPRESSOR
MMF	MULTIMEDIA FILER
MWP	MAKE-UP WATER PUMP
P	PUMP (GENERAL)
PCV	PRESSURE CONTROL VALVE
PRV	PRESSURE RELIEF VALVE
RO	REVERSE OSMOSIS
SI	SILENCER
STR	STRAINER
T	TANK

MISCELLANEOUS ABBREVIATIONS

AC	AIR TO CLOSE
AG	ABOVE GROUND
AO	AIR TO OPEN
CBD	CONTINUOUS BLOWDOWN
DE	DE-ENERGIZED
ELEV	ELEVATION
ESD	EMERGENCY SHUTDOWN
FC	FAIL CLOSED
FIP	FAIL IN PLACE
FRP	FIBER REINFORCED PLASTIC
FO	FAIL OPEN
FP	FULL PORT
HOA	HAND OFF AUTOMATIC
IBD	INTERMITTENT BLOWDOWN
LC	LOCK CLOSED
LO	LOCK OPEN
LPD	LOW POINT DRAIN
MOR	MAINTENANCE OFF REMOTE
MOV	MOTOR OPERATED VALVE
MW	MANWAY
NC	NORMALLY CLOSED
NO	NORMALLY OPEN
PDCS	POWER DISTRIBUTION CONTROL SYSTEM
PSS	PLANT SCADA SYSTEM
PSD	PROCESS SHUTDOWN
PLC	PROGRAMMABLE LOGIC CONTROLLER
PVC	POLYVINYL CHLORIDE
RTD	RESISTANCE TEMPERATURE DETECTOR
SCR	SELECTIVE CATALYTIC REDUCTION
SP	SET POINT
TCP	TURBINE CONTROL PANEL
TSO	TIGHT SHUT-OFF
UG	UNDERGROUND
(V)	VENDOR-FURNISHED

SYSTEM ABBREVIATION CODE

CF	CHEMICAL FEED
CTG	COMBUSTION TURBINE GENERATOR
CTW	NON-POTABLE CITY WATER
CWR	COOLING WATER RETURN
CWS	COOLING WATER SUPPLY
DW	DEMINERALIZED WATER
DR	DRAINS
FG	FUEL GAS
FOR	FUEL OIL RETURN
FOS	FUEL OIL SUPPLY
GLY	GLYCOL/WATER SOLUTION
HF	HYDRAULIC FLUID
IA	INSTRUMENT AIR
LOS	LUBE OIL SUPPLY
LOR	LUBE OIL RETURN
MUW	MAKEUP WATER
PW	POTABLE WATER
VT	VENTS

AREA CODES

CWPYRD	-	CARROLTON WATER PLANT YARD AREA
WPCAUX	-	WEST POWER COMPLEX AUXILIARY AREA
WPCCUR	-	WEST POWER COMPLEX CENTRAL UTILITY RACK
WPCOPS	-	WEST POWER COMPLEX OPERATIONS CENTER
WPCCTG	-	WEST POWER COMPLEX COMBUSTION TURBINE GEN
WPCSFC	-	WEST POWER COMPLEX STATIC FREQ. CONVERTER

EQUIPMENT NUMBER DESIGNATION

WPCAUX - 0 - FO - P-01

- SEQUENTIAL NUMBER
- EQUIPMENT CODE
- SYSTEM CODE
- UNIT NUMBER
- AREA CODE

INSULATION CLASS

A, B, ETC.		HEAT CONSERVATION, REFER TO INSULATION SPECIFICATIONS
N		NO INSULATION
F		INSULATION & HEAT TRACING FOR FREEZE PROTECTION
G		INSULATION FOR PERSONNEL PROTECTION
H		INSULATION FOR CONDENSATION PROTECTION

PIPING SPECIFICATIONS

AC01	-	CARBON STEEL, CLASS 150, INTERIOR INST & SERVICE AIR
CU01	-	TYPE K COPPER, SOLDER FITTINGS, CLASS 150 FLANGES
HC01	-	CARBON STEEL, CLASS 150, LOW PRESSURE FUEL GAS, ABOVE GROUND NO. 2 FUEL OIL
YHD	-	DOUBLE WALL CONTAINMENT PIPE, UNDERGROUND NO. 2 FUEL OIL
MC23	-	CARBON STEEL, CLASS 150, BELOW 750°F, LP PROCESS DRAINS

LINE NUMBER DESIGNATIONS

WPCCTG - 7 - NG - 8" - 0001 - HC03 - NX"

- INSULATION THICKNESS
- INSULATION CODE
- PIPE MATERIAL CODE
- LINE NUMBER
- SIZE
- SYSTEM CODE
- UNIT NUMBER
- AREA CODE

INSTRUMENT & CONTROL VALVE TAG NUMBERING

WPCCTG - 7 - FG - TT - 101 - A

- SUFFIX LETTER
- SEQUENCE NUMBER
- INSTRUMENT TYPE - FOLLOW ISA-5.1-1984 (R1992)*
- SYSTEM CODE
- UNIT
- AREA

INSTRUMENT/COMPONENT IDENTIFICATION LETTERS PER ISA 5.1

	FIRST LETTER		SUCCEEDING LETTERS		
	MEASURED OR INITIATING VARIABLE	MODIFIER	READ OUT OR PASSIVE FUNCTION	OUTPUT FUNCTION	MODIFIER
A	ANALYSIS		ALARM		
B	BURNER,COMBUSTION		USER'S CHOICE (1)	USER'S CHOICE (1)	USER'S CHOICE (1)
C	CONDUCTIVITY			CONTROL	CLOSED
D	USER'S CHOICE (1)	DIFFERENTIAL			
E	VOLTAGE		SENSOR (PRIMARY ELEMENT)		
F	FLOW RATE	RATIO(FRACTION)			
G	USER'S CHOICE (1)		GLASS, VIEWING DEVICE (3)		
H	HAND				HIGH (4)
I	CURRENT(ELECTRICAL)		INDICATE		
J	POWER	SCAN			
K	TIME, TIME SCHEDULE	TIME RATE OF CHANGE		CONTROL STATION	
L	LEVEL		LIGHT		LOW
M	MOISTURE	MOMENTARY			MIDDLE, INTERMEDIATE
N	USER'S CHOICE (1)		TORQUE	USER'S CHOICE (1)	USER'S CHOICE (1)
O	USER'S CHOICE (1)		ORIFICE RESTRICTION		OPEN
P	PRESSURE, VACUUM		POINT (TEST) CONNECTION		
Q	QUANTITY	INTEGRATE, TOTALIZE			
R	RADIATION		RECORD		
S	SPEED, FREQUENCY	SAFETY (8)		SWITCH	
T	TEMPERATURE			TRANSMIT	
U	MULTIVARIABLE (5)		MULTIFUNCTION (5)	MULTIFUNCTION (5)	MULTIFUNCTION (5)
V	VIBRATION, MECHANICAL ANALYSIS			VALVE, DAMPER, LOUVER	
W	WEIGHT, FORCE		WELL		
X	UNCLASSIFIED (6)	X AXIS	UNCLASSIFIED (6)	UNCLASSIFIED (6)	UNCLASSIFIED (6)
Y	EVENT, STATE OR PRESENCE	Y AXIS		RELAY, COMPUTE, CONVERT (7)	
Z	POSITION, DIMENSION	Z AXIS		DRIVER,ACTUATOR UNCLASSIFIED FINAL CONTROL ELEMENT	

NOTES:

1. "USER'S CHOICE" IS INTENDED TO COVER UNLISTED MEANINGS THAT WILL BE USED REPEATEDLY.
2. MODIFYING LETTERS USED IN COMBINATION WITH A FIRST LETTER REPRESENT A NEW AND SEPARATE MEASURED VARIABLE.
3. APPLIES TO UNCALIBRATED DEVICES SUCH AS SIGHT GLASSES.
4. APPLIES TO VALUE OF MEASURED VARIABLE.
5. NON-SPECIFIC DESIGNATION THAT SHOULD BE USED SPARINGLY. USE COMBINATIONS OF OTHER LETTERS WHERE POSSIBLE.
6. INTENDED FOR UNLISTED MEANINGS USED TO A LIMITED EXTENT.
7. DEFINE FUNCTION NEXT TO SYMBOL ON DRAWING.
8. THE TERM "SAFETY" APPLIES TO PROTECTIVE PRIMARY ELEMENTS AND EMERGENCY PROTECTIVE FINAL CONTROL ELEMENTS ONLY.

TAG NUMBERING

SYSTEM ACRONYM - INSTRUMENT/COMPONENT CODE - IDENTIFICATION NUMBER / ALPHA CHARACTER [HPS-FT-01003A]

SYSTEM ACRONYM: SEE TABLE

INSTRUMENT/COMPONENT CODE: SEE ISA 5.1 TABLE

IDENTIFICATION NUMBER: FIVE (5) DIGIT NUMBER WHERE DIGITS 1, 2, AND 3 ARE THE P&ID NO. AND DIGITS 4 AND 5 ARE SEQUENTIAL NUMBERS. FOLLOW ISA LOOP SCHEME WHEN NUMBERING COMPONENTS. EXAMPLE: HPS-PT-10001A AND & HWS-TT-18001A

ALPHA CHARACTER: USE WHERE MULTIPLE COMPONENTS ARE PERFORMING THE SAME FUNCTION. EXAMPLES ARE REDUNDANT PRESSURE TRANSMITTERS OR DOUBLE ISOLATION VALVES (HPS-PT-01001A & HPS-PT-01001B OR NG-PSV-09008A & NG-PSV-09008B)

REUSE OF DOCUMENTS: THIS DOCUMENT, AND THE IDEAS AND DESIGNS INCORPORATED HEREIN, AS AN INSTRUMENT OF PROFESSIONAL SERVICE, IS THE PROPERTY OF JACOBS AND IS NOT TO BE USED, IN WHOLE OR IN PART, FOR ANY OTHER PROJECT WITHOUT THE WRITTEN AUTHORIZATION OF JACOBS.
© JACOBS 2022. ALL RIGHTS RESERVED.

BID PACKAGE - NOT FOR CONSTRUCTION

REV.	DATE	DESCRIPTION	BY
0	03/06/2026	ISSUED FOR BID	LR

STATE OF LOUISIANA
Lane Richard
License No. 0047786
PROFESSIONAL ENGINEER IN MECHANICAL ENGINEERING

SEWERAGE AND WATER BOARD OF NEW ORLEANS

CONTRACT No. 1444

WEST POWER COMPLEX @ CWTP
FUEL OIL DELIVERY SYSTEM

PROCESS

ABBREVIATIONS, NOTES, AND SYMBOLS

Jacobs

DR.	J.MORGAN
CK:	L.LINDLEY
AP:	L. RICHARD
LAST EDIT:	
SCALE:	
DATE:	03/06/2026
A/E DWG NO.	P001
DWG. No.	12196-W-24
SET NO:	SHEET NO: 56 OF 72

DATE | | JOB NO. | D3483600

DESIGNED BY: L. RICHARD
FILE NAME: P-001.dwg

P-001.dwg
3/8/2026
8:32:50 PM

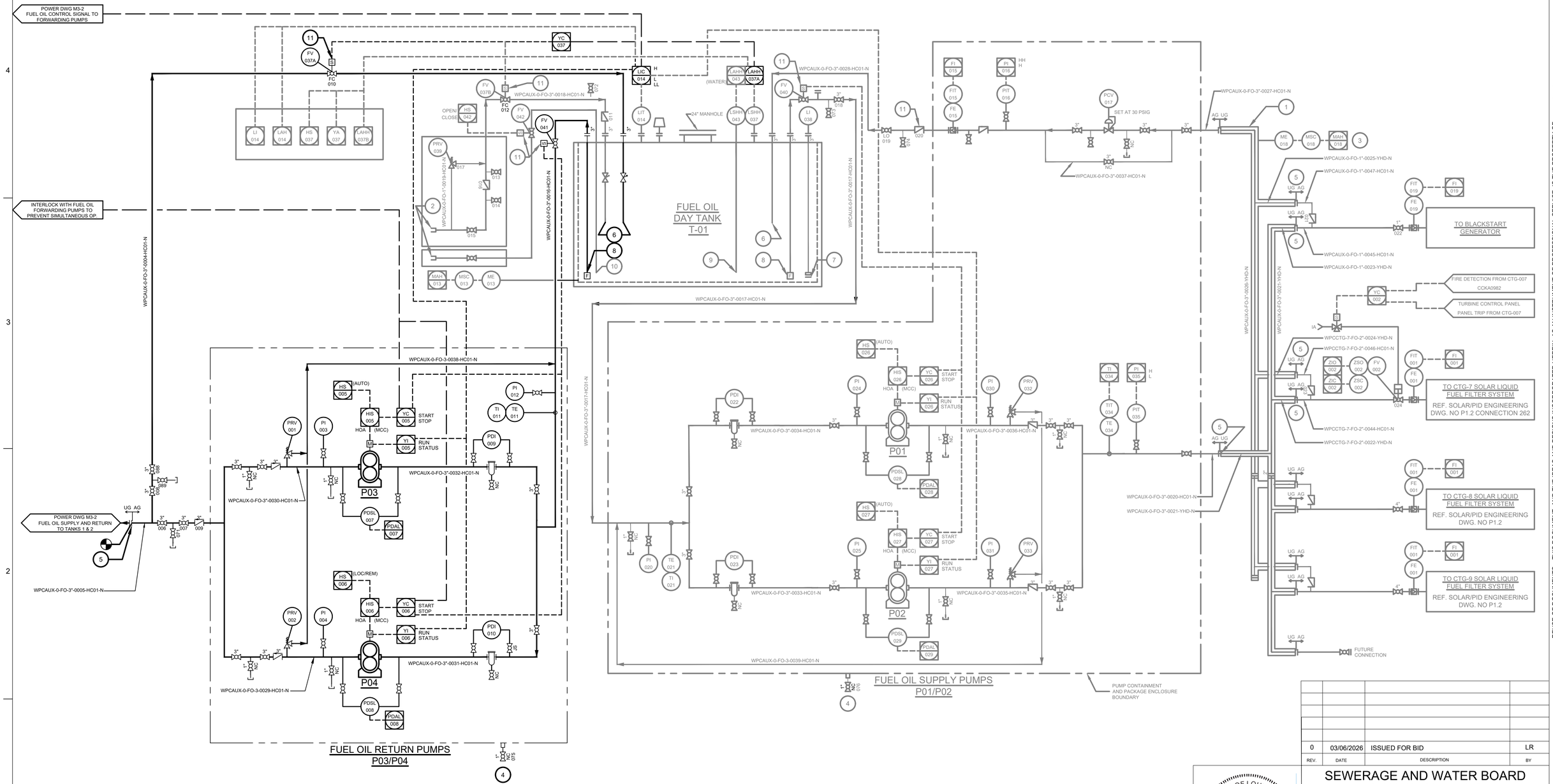

GENERAL NOTES:

A. UNLESS SPECIFICALLY IDENTIFIED, ALL PIPING ON THIS DRAWING IS TO BE FABRICATED INSTALLED AND TESTING ACCORDING TO ASME B31.3.
B. ALL INSTRUMENT AND CONTROL TAGS ARE ASSUMED TO HAVE THE PREFIX "WPCAUX - 0 - FO" FOR "AREA - UNIT - SYSTEM CODE".

KEYED NOTES: (X)

1. DOUBLE WALL CONTAINMENT FOR UNDERGROUND FUEL OIL PIPING WITH LEAK DETECTION SENSING AND ALARM.
2. 3" DRIPLESS CAMLOCK CONNECTION FOR TRUCK PUMP UNLOADING. FITTING AND DOWNSTREAM BALL VALVE TO BE LOCATED IN A SPILL CONTAINMENT BOX.
3. LEAK DETECTION SENSOR FOR DOUBLE WALL CONTAINMENT PIPE TO BE CONNECTED TO EXISTING SENSOR PANEL INSTALLED UNDER CP-1415. SENSOR PANEL WILL BE LOCATED NEAR WEST TRANSITION STRUCTURE.
4. DRAIN VALVES ON SKID CONTAINMENT TO STAY IN CLOSED POSITION UNTIL VISUAL VERIFICATION OF LACK OF PRESENCE OF OIL BEFORE OPENING VALVE.
5. PROVIDE INSULATING FLANGE FOR ABOVEGROUND/UNDERGROUND TRANSITION.
6. EXTEND PIPING TO 24" FROM BOTTOM OF TANK.
7. EXTEND PIPING TO BOTTOM OF TANK.
8. EXTEND PIPING TO 12" ABOVE BOTTOM OF TANK.
9. EXTEND PIPING TO 6" ABOVE BOTTOM OF TANK.
10. EXTEND PIPING TO 3" ABOVE BOTTOM OF TANK.
11. LOCATE VALVE ABOVE ELEVATION OF TANK.

REV.	DATE	DESCRIPTION	BY
0	03/06/2026	ISSUED FOR BID	LR

STATE OF LOUISIANA
Lane Richard
License No. 0047786
PROFESSIONAL ENGINEER IN MECHANICAL ENGINEERING

SEWERAGE AND WATER BOARD OF NEW ORLEANS

CONTRACT No. 1444

WEST POWER COMPLEX @ CWTP
FUEL OIL DELIVERY SYSTEM

PIPING & INSTRUMENTATION DIAGRAM

FUEL OIL

Jacobs

DATE		JOB NO.	D3483600
DESIGNED BY: L. RICHARD			
FILE NAME: P-550.dwg			

DR.	J.MORGAN
CK:	L.LINDLEY
AP:	L. RICHARD
LAST EDIT:	
SCALE:	
DATE:	03/06/2026
A/E DWG NO.	P550
SET NO:	12196-W-24
SHEET NO:	57 OF 72

P-550.dwg
3/8/2026
8:33:17 PM

REUSE OF DOCUMENTS: THIS DOCUMENT, AND THE IDEAS AND DESIGNS INCORPORATED HEREIN, AS AN INSTRUMENT OF PROFESSIONAL SERVICE, IS THE PROPERTY OF JACOBS AND IS NOT TO BE USED, IN WHOLE OR IN PART, FOR ANY OTHER PROJECT WITHOUT THE WRITTEN AUTHORIZATION OF JACOBS.
JACOBS 2022. ALL RIGHTS RESERVED.

BID PACKAGE - NOT FOR CONSTRUCTION

GENERAL

A. SEQUENCES DESCRIBED HEREIN ARE SUPPLEMENTED BY THE PIPING AND INSTRUMENTATION DIAGRAMS. REFER TO ADDITIONAL DRAWINGS FOR SUPPLEMENTAL INFORMATION AND REQUIREMENTS.

B. WHERE DOUBLE WALL TANKS ARE PROVIDED, AN INTERSTITIAL LEVEL SWITCH IS PROVIDED AND ALARM IS INDICATED AT THE PLANT SCADA SYSTEM (PSS).

C. PARALLEL PUMP (LEAD/STANDBY) CONTROL LOGIC: THE PUMP SYSTEMS IN THE WEST POWER COMPLEX (WPC) INCLUDE MULTIPLE PUMPS IN PARALLEL FOR PURPOSES OF REDUNDANCY. FOR THOSE SYSTEMS WHERE AUTOMATED SELECTION AND STARTING OF PUMPS IS NECESSARY, THE FOLLOWING LOGIC GUIDELINES SHALL APPLY.

1. FOR PUMPS WHICH ARE STARTED EITHER AUTOMATICALLY OR MANUALLY/REMOTELY VIA THE PSS, ON A CALL TO START, THE DESIGNATED LEAD PUMP SHALL BE AUTOMATICALLY SELECTED AND STARTED BY THE PSS.
2. PSS SWITCH CONTROLS FOR EACH PARALLEL PUMP SHALL INCLUDE POSITIONS FOR LEAD, STANDBY, AND MAINT HOLD. IF THERE ARE MORE THAN TWO PARALLEL PUMPS PROVIDED FOR THE PARTICULAR PUMP APPLICATION, THE STANDBY POSITION MAY BE EXPANDED TO STANDBY2, ETC.
3. WHEN A PARALLEL PUMP SYSTEM IS COMMANDED TO START FROM THE PSS, THE DESIGNATED LEAD PUMP WILL START. IF THE PUMP IS NOT CONFIRMED RUNNING WITHIN 10 SECONDS (ADJUSTABLE) OF THE COMMAND, THE PUMP WILL BE ASSUMED FAILED. THE PSS LOGIC SHALL REMOVE THE START SIGNAL TO THE MOTOR AND DISPLAY AN ALARM ON THE PSS OPERATOR SCREEN. UPON A FAILURE OF THE LEAD PUMP THE STANDBY PUMP WILL START.
4. WHEN IN MAINTENANCE HOLD, THE INDIVIDUAL PUMP IS STOPPED AND WILL NOT START UNTIL THE OPERATOR PLACES THE PUMP BACK IN LEAD OR STANDBY AND THE HAND SWITCH IS IN REMOTE.
5. EQUALIZATION OF RUN TIME SHALL BE ACHIEVED BY THE PSS THROUGH RUN TIME MONITORING AND CYCLING OF THE LEAD PUMP DESIGNATION. AN OPERATOR-ADJUSTABLE RUN TIME INTERVAL (INITIALLY SET AT 7 DAYS) WILL BE PROGRAMMED INTO THE PSS. WHEN AN OPERATING PUMP REACHES THIS INTERVAL, THE OFFLINE PUMP WITH THE LEAST RUN TIME WILL BE AUTOMATICALLY DESIGNATED AS LEAD PUMP. THE OPERATOR WILL BE NOTIFIED THAT THE LEAD PUMP DESIGNATION WILL CHANGE 2 HOURS PRIOR TO SWITCHING. ACTUAL PUMP OPERATION WILL NOT CHANGE UNTIL THE NEXT START COMMAND IS ISSUED. THIS CYCLING OPERATION WILL CONTINUE AS LONG AS THE PUMPING SYSTEM IS ACTIVE. THE INITIAL RUN TIME INTERVAL PROGRAMMING WILL REQUIRE STAGGERING TO PREVENT STOPPING OF MULTIPLE SYSTEMS AT THE END OF THE FIRST INTERVAL.
6. PUMP RUNTIMES WILL BE DISPLAYED AT THE PSS. OPERATORS WILL BE REQUIRED TO MONITOR THE ACCUMULATED RUNTIMES OF THE PUMPS AND ENSURE THAT OPERATION OF THE PUMPS IS ROTATED ACCORDINGLY. AT ANY TIME, THE OPERATOR MAY OVERRIDE THE PSS'S DESIGNATION OF THE LEAD PUMP AND MANUALLY SELECT A DIFFERENT PUMP IF SO DESIRED. THE REMAINING PUMP(S) WHICH ARE NOT IN MAINTENANCE HOLD STATUS WILL BE AUTOMATICALLY SWITCHED TO STANDBY DESIGNATION.
7. THE PSS SHALL INDICATE AND DISPLAY EACH REMOTELY OPERABLE PUMP CONTROL AND THE STATUS OF THOSE CONTROLS.
8. ALL PUMPS MUST INCLUDE HAND/OFF/AUTO FUNCTIONALITY SO THAT THE SYSTEMS CAN BE RUN BY A LOCAL OPERATOR IN THE EVENT OF A CONTROL SYSTEM FAILURE.

FUEL GAS (NATURAL GAS)

A. OPERATING SEQUENCE DESCRIPTION:

1. FUEL GAS (NATURAL GAS) IS SUPPLIED TO THE CARROLLTON WATER PLANT VIA A DEDICATED HIGH PRESSURE NATURAL GAS SUPPLY LINE OPERATING AT APPROXIMATELY 180 PSIG FROM ENTERGY. FUEL GAS IS CURRENTLY UTILIZED BY EXISTING COMBUSTION TURBINES ON SITE. A NEW BRANCH DOWNSTREAM OF THE ENTERGY REGULATING STATION WILL SUPPLY FUEL GAS TO THE WEST POWER COMPLEX VIA THE UTILITY RACK.
2. CTG-07 FUEL GAS SUPPLY
   a. CTG-07 REQUIRES THE FUEL GAS PRESSURE TO BE INCREASED FROM A MINIMUM OF 160 PSIG AT THE FUEL GAS COMPRESSOR INLET POINT, MEASURED BY WPCCTG-7-NG-PIT-001 TO 440 PSIG AT THE DISCHARGE OF THE FUEL GAS COMPRESSOR.
   b. THE GAS SUPPLY TO THE SITE WILL BE SUFFICIENT TO SUPPORT A FUTURE WEST POWER COMPLEX BUILDOUT INCLUDING CTG-08 AND CTG-09. INCOMING GAS PRESSURE IS MONITORED VIA WPCAUX-0-NG-PIT-001 AND INCOMING GAS FLOW TO THE WEST POWER COMPLEX IS MEASURED BY WPCAUX-0-NG- FE-001.
   c. CTG-07 INCLUDES AN AUTOMATIC TRANSFER CAPABILITY FROM FUEL GAS TO FUEL OIL UPON A LOSS OF LINE PRESSURE IN THE NATURAL GAS SUPPLY HEADER. THIS TRANSFER FUNCTION WILL UTILIZE WPCAUX-0-NG-PIT-001 FOR THE REQUIRED GAS PRESSURE MEASUREMENT.
   d. THE FUEL GAS COMPRESSOR AND FUEL GAS CONDITIONING EQUIPMENT IS PROVIDED BY SOLAR TURBINES UNDER THE CP-1438. REFER TO ENERPROJECT AND SOLAR DOCUMENTATION FOR FURTHER INFORMATION.
   e. FUEL CUTOFF ON CONFIRMED FIRE SIGNAL:
      UPON CONFIRMATION OF FIRE SIGNAL FROM THE CTG-007 FIRE ALARM PANEL (SIGNAL WPCCTG-7-FIRE PANEL) OR TRIP SIGNAL FROM THE TURBINE CONTROL PANEL, CLOSE FUEL GAS VALVE WPCCTG-7-FG-FV-022).

FUEL OIL

A. OPERATING SEQUENCE DESCRIPTION:

1. FUEL OIL SYSTEM
   a. THE FUEL OIL DAY TANK (T-01) WILL BE ABLE TO BE FILLED FROM THE MAIN FUEL TANK FARM VIA THE FUEL OIL FORWARDING PUMPS (00-FO-PMP-001A/B SHOWN ON POWER ENGINEERS DRAWING 12182-W2S M3-2). THESE PUMPS WILL FEED A BIDIRECTIONAL PIPE AND THE MANUAL VALVES AT THE PUMP SKID AND AT THE FUEL OIL DAY TANK AT THE WEST POWER COMPLEX MUST BE PROPERLY SET FOR FILLING OF THE TANK. TO PROTECT THE TANK FROM OVERFILLING, A HIGH LEVEL SWITCH LSHH-037 WILL CAUSE THE INLET VALVE FV-037A TO CLOSE, AND WILL ALSO CAUSE THE FUEL OIL FORWARDING PUMPS TO SHUT DOWN. ADDITIONALLY, AN AST OVERFILL PROTECTION VALVE IN THE FILL LINE INSIDE THE TANK WILL PREVENT OVERFILLING OF THE FUEL OIL TANK.
   b. A TRUCK UNLOADING STATION USING A PUMP ON THE TRUCK IS USED TO TRANSPORT FUEL TO THE TANK. AN AST OVERFILL PROTECTION VALVE IN THE FILL LINE INSIDE THE TANK WILL PREVENT OVERFILLING OF THE FUEL OIL TANK. HIGH LEVEL SWITCH (LSHH-037) WILL CLOSE A SOLENOID-OPERATED VALVE (FV-037B) IN THE FILL LINE AND SHOW AN ALARM AT THE TRUCK UNLOADING STATION TO PREVENT OVERFILLING THE FUEL OIL TANK.
   c. FUEL OIL SUPPLY TO THE WEST POWER COMPLEX IS FED FROM THE FUEL OIL SUPPLY PUMPS (WPCAUX-0-FO-P01/P02). THE FUEL OIL WILL BE SUPPLIED TO THE FUEL OIL SUPPLY HEADER, AND THE BACKPRESSURE REGULATOR (PCV-017) WILL MAINTAIN SYSTEM PRESSURE AT 30 PSIG. AUTOMATED VALVES ON THE SOLAR TURBINE LIQUID FUEL SKID WILL OPEN TO ALLOW FUEL TO THE COMBUSTION TURBINE. THERE IS ALSO AN AUTOMATED PRESSURE SWITCH ON THE NATURAL GAS LINE THAT ALLOWS THE COMBUSTION TURBINE TO SWITCH FROM FUEL OIL TO FUEL GAS IN THE EVENT OF A LOSS OF GAS PRESSURE. REFER TO THE VENDOR DOCUMENTATION FOR DETAILS. THERE WILL BE A PERMISSIVE ON THE PUMPS TO PREVENT THE PUMPS FROM STARTING WHEN TANK LEVEL IS LOW, AS IDENTIFIED BY LIC-014.
   d. FUEL OIL WILL BE ABLE TO BE RETURNED TO THE MAIN FUEL TANK FARM UTILIZING THE FUEL OIL RETURN PUMPS (WPCAUX-0-FO-P03/P04). THESE PUMPS FEED THE BIDIRECTIONAL LINE AND THE VALVES AT THE WEST POWER COMPLEX FUEL SKID AND AT THE MAIN TANK FARM WILL REQUIRED TO BE MANUALLY SET IN THE APPROPRIATE POSITIONS TO ALLOW FOR FUEL TRANSFER BACK TO THE MAIN TANKS. FUEL TRANSFER TO THE MAIN TANK FARM WILL BE REQUIRED WHEN THE LIQUID FUEL USAGE AT THE WEST POWER COMPLEX IS LOW AND THE FUEL REQUIRES FILTRATION AND POLISHING. THERE WILL BE AN INTERLOCK BETWEEN THESE PUMPS AND THE FUEL OIL FORWARDING PUMPS AT THE MAIN TANK FARM TO PREVENT SIMULTANEOUS OPERATION OF BOTH SETS OF PUMPS.THERE WILL BE A PERMISSIVE ON THE PUMPS TO PREVENT THE PUMPS FROM STARTING WHEN TANK LEVEL IS LOW, AS IDENTIFIED BY LIC-014.
   e. THE FUEL OIL DAY TANK (T-01) IS A UL-142 DOUBLE WALL TANK. IT WILL HAVE AN INTERSTITIAL MONITOR WITH A MOISTURE SENSOR WHICH WILL SEND AN ALARM TO THE PSS IN THE EVENT OF A LEAK IN THE INTERNAL WALL.
   f. THE UNDERGROUND FUEL OIL PIPING IS DOUBLE WALL PIPING, WITH MOISTURE SENSORS IN THE CONTAINMENT PIPE. THE PIPING SENSORS WILL CONNECT TO A MASTER CONTROL PANEL IN THE WEST POWER COMPLEX. THE MASTER CONTROL PANEL WILL SEND AN ALARM TO THE PSS IN THE EVENT OF AN OIL LEAK. THE UNDERGROUND PIPING TO BE INSTALLED IN OTHER PACKAGES (CP-1415, CP-1420) WILL ALSO CONNECT TO THIS MASTER CONTROL PANEL, FOR AN INTEGRATED SYSTEM.
   g. FUEL CUTOFF ON CONFIRMED FIRE SIGNAL:
      UPON CONFIRMATION OF FIRE SIGNAL FROM THE CTG-007 FIRE ALARM PANEL (SIGNAL WPCCTG-7-FIRE PANEL) OR TRIP SIGNAL FROM THE TURBINE CONTROL PANEL, CLOSE FUEL OIL VALVE WPCCTG-7-FO-FV-002).

SERVICE AND INSTRUMENT AIR

A. OPERATING SEQUENCE DESCRIPTION:

1. THE SERVICE & INSTRUMENT AIR SYSTEM PROVIDES COMPRESSED AIR AT 100-125 PSIG FOR VARIOUS USES IN THE PLANT, INCLUDING:
   a. PNEUMATIC CONTROL VALVE ACTUATORS
   b. COMBUSTION TURBINE STARTING AIR
   c. AIR FOR CEMS CABINET
   d. AIR FOR STACK FLOW MONITORS
   e. SERVICE AIR DROPS LOCATED THROUGHOUT THE PLANT
2. THE SERVICE & INSTRUMENT AIR SYSTEM INCLUDES AIR COMPRESSORS, COALESCING FILTERS, DESICCANT DRYERS, AFTER FILTERS, RECEIVER, AND THE AIR DISTRIBUTION SYSTEM.
3. THE SERVICE & INSTRUMENT AIR PACKAGE IS DIRECTLY CONTROLLED BY A VENDOR-FURNISHED LOCAL PROGRAMMABLE LOGIC CONTROLLER (PLC), WITH OVERALL ENABLING AND STATUS MONITORING FROM THE PSS VIA MODBUS TCP/IP.
4. THE DESICCANT DRYERS HAVE A LOCAL CONTROLLER WITH ENABLING AND STATUS MONITORING FROM THE PSS VIA HARDWIRED SIGNALS.
5. THE AIR COMPRESSORS ARE STAGED TO PROVIDE A CONSTANT PRESSURE OF 145 PSIG AT THE AIR RECEIVER. THE DESICCANT DRYERS REDUCE THE MOISTURE IN THE AIR TO LESS THAN -40°F DEWPOINT.
6. AIR COMPRESSOR PACKAGE:
   a. REFER TO THE MECHANICAL SCHEDULES FOR INFORMATION REGARDING THE COMPRESSED AIR SYSTEM CAPACITY.
   b. THE PSS WILL SEND AN ENABLE SIGNAL TO EACH AIR COMPRESSOR THAT WILL ALLOW THE LOCAL CONTROLLER TO CONTROL THE STARTUP OF THE AIR COMPRESSOR. THE RUN STATUS WILL BE DISPLAYED AT THE PSS. COMPRESSOR WARNING FAULT AND GENERAL FAULT STATUS WILL BE DISPLAYED ON THE PSS . THE LOCAL CONTROLLER INCLUDES A MODBUS TCP/IP COMMUNICATION LINK BACK TO THE PSS TO ALLOW FOR REMOTE CONTROL AND MONITORING AS WELL.
   c. THE PSS CAN ALSO SET EACH COMPRESSOR TO ADJUST TO LOAD EITHER BY VFD OR FIXED SPEED.
   d. THE COMPRESSORS WILL BE STAGED ON TO MAINTAIN A SUFFICIENT PRESSURE IN THE RECEIVER TANK. THE PRESSURE SET POINT AND DEAD BAND FOR STAGING A SECOND COMPRESSOR WILL BE ADJUSTABLE. A TIMER WILL INHIBIT THE RESTARTING OF A COMPRESSOR TO PREVENT THE COMPRESSORS FROM CYCLING.
   e. THE AIR COMPRESSOR DISCHARGE AIR HEADER PRESSURE IS MONITORED AND ALARMED AT THE PSS VIA PIT DOWNSTREAM OF THE AIR RECEIVER.
   f. IF A COMPRESSOR FAILS, IT IS ALARMED AT THE PSS. A FAILED COMPRESSOR MUST BE RESET FROM THE PSS AS WELL AS AT THE COMPRESSOR LOCAL PLC. AFTER BEING RESET, THE FAILED COMPRESSOR WILL RESUME OPERATION IF IT IS REQUIRED TO MEET PRESSURE SET POINT.
   g. COMPRESSOR STAGING WILL AUTOMATICALLY ADJUST TO EQUALIZE RUN TIME BETWEEN COMPRESSORS.
   h. FOR STARTUP OF THE CTG'S, THE FLOW RATE REQUIRES TWO COMPRESSORS TO BE RUNNING. WHEN THE FUTURE CTG'S ARE ADDED, ONLY ONE CTG CAN BE STARTED UP AT A TIME.
7. COALESCING FILTERS:
   a. DIFFERENTIAL PRESSURE IS MONITORED AND ALARMED ACROSS THE COALESCING FILTERS VIA PSS.
   b. THE COALESCING FILTER DISCHARGE AIR HEADER PRESSURE IS INDICATED LOCALLY BY PRESSURE GAUGE.
8. DESICCANT DRYERS:
   a. THE DESICCANT DRYERS WILL HAVE A LOCAL CONTROL PANEL THAT WILL SEQUENCE THE DRYERS BETWEEN ACTIVE AND REGENERATION STAGE. THE DRYER CONTROL PANEL WILL RECEIVE AN ENABLE SIGNAL FROM THE PSS THAT WILL ALLOW THE DRYERS TO FUNCTION. THE DRYERS WILL NORMALLY BE ENABLED, BUT THE OPERATOR WILL BE ALLOWED TO TAKE THE DESICCANT DRYERS OFF LINE FOR MAINTENANCE.
   b. THE DRYER LOCAL CONTROL PANEL WILL BE INTEGRATED INTO THE OVERALL INSTRUMENT AI COMPRESSOR CONTROL SYSTEM AND COMMUNICATE TO THE PSS VIA MODBUS TCP/IP.
   c. THE DRYER DISCHARGE AIR HEADER DEW POINT TEMPERATURE IS MONITORED AND ALARMED.
   d. THE DRYER DISCHARGE AIR HEADER PRESSURE IS MONITORED AND ALARMED AT THE PSS VIA PI.
9. AFTER FILTER:
   a. DIFFERENTIAL PRESSURE IS MONITORED AND ALARMED ACROSS THE AFTER FILTERS BY A PRESSURE DIFFERENTIAL SWITCH.
   b. THE AFTER FILTER DISCHARGE AIR HEADER PRESSURE IS INDICATED LOCALLY BY PRESSURE GAUGE.
10. RECEIVER:
    a. AIR RECEIVER PRESSURE AND TEMPERATURE ARE INDICATED LOCALLY ON THE RECEIVER VESSEL BY GAUGES.
11. DISTRIBUTION SYSTEM:
    a. A SELF-CONTAINED PRESSURE REGULATING VALVE PCV PROVIDES PRESSURE CONTROL FOR THE PLANT AIR DISTRIBUTION SYSTEM.
12. INSTRUMENT AIR DISTRIBUTION PRESSURE IS MEASURED VIA WPC-AUX-0-PI-001 (BETWEEN CTG-07 AND FUTURE CTG-08) AND THE SKID MOUNTED PI AFTER THE AIR RECEIVER ON THE AIR COMPRESSOR SKID. PRESSURES ARE INDICATED AND ALARMED AT THE PSS.

CONTINUOUS EMISSIONS MONITORING

A. OPERATING SEQUENCE DESCRIPTION:

1. THE FUNCTION OF THE CONTINUOUS EMISSIONS MONITORING SYSTEM (CEMS) IS TO CONTINUOUSLY MONITOR VARIOUS EMISSIONS CONSTITUENTS IN THE FLUE GAS OF CTG-07. THE CEMS ALSO FUNCTIONS TO AUTOMATICALLY GENERATE REPORTS FOR RECORD OF PLANT EMISSIONS. MEASURED PARAMETERS INCLUDE:
   a. TURBINE EXHAUST PARAMETERS:
      1) CARBON MONOXIDE (CO)
      2) NITROGEN OXIDE COMPOUNDS (NOX)
2. THE CEMS IS DIRECTLY CONTROLLED BY A PLC FURNISHED BY THE MANUFACTURER. KEY MONITORING AND CONTROL DATA AS WELL AS ALARMS AND STATUS INFORMATION ARE COMMUNICATED TO THE PSS VIA MODBUS TCP/IP COMMUNICATION LINK AS WELL AS HARD-WIRED I/O. REFER TO VENDOR DOCUMENTATION FOR FURTHER DETAILS REGARDING THE CEMS CONTROLLER AND ASSOCIATED FUNCTIONS.
3. THE CONTINUOUS EMISSIONS MONITORING SYSTEM (CEMS) INCLUDES THE FOLLOWING EXHAUST GAS MEASUREMENT DATA TO THE PSS VIA MODBUS TCP/IP:
   a. TURBINE EXHAUST CO
   b. TURBINE EXHAUST NOX
   c. TURBINE EXHAUST STACK FLOW
4. THE FOLLOWING STATUS INFORMATION IS PROVIDED TO THE PSS VIA MODBUS TCP/IP:
   a. OUTLET ANALYZER IN SERVICE
   b. OUTLET IN CALIBRATION
   c. CEMS COMMON ALARM
   d. CEMS CABINET TEMPERATURE ALARM
   e. CEMS INSTRUMENT AIR ALARM
   f. CEMS CONTROLLER ALARM
   g. CEMS POWER LOSS ALARM
5. THE PSS PROVIDES THE FOLLOWING PROCESS STATUS AND COMMANDS TO THE CEMS SYSTEM:
   a. TOTAL FUEL CONSUMPTION OF CTG-07 (FUEL GAS AND FUEL OIL)
   b. CTG-07 TOTAL MEGAWATT LOAD
   c. CTG-07 STACK TEMPERATURE
   d. CTG-07 ONLINE
   e. REMOTE CALIBRATION START
   f. CEMS SAMPLE VALID

DRAIN SYSTEM

A. OPERATING SEQUENCE DESCRIPTION:

1. THE DRAINS FROM THE COMBUSTION TURBINE SKID WILL COLLECT IN THE CTG-7 OILY DRAINS TANK, ADJACENT TO CTG7. THIS OILY DRAINS TANK WILL BE PROVIDED WITH A DUPLEX SUMP PUMP SKID AND WILL BE CONTROLLED BY LEVEL SWITCHES IN THE TANK (LSLL-XXX, LSL-XXX, LSH-XXX, LSHH-XXX). THE PUMP SKID WILL HAVE ITS OWN PLC CONTROLLER TO INITIATE STARTING AND STOPPING OF THE PUMPS BASED ON THE LEVEL SWITCHES. THE LOCAL CONTROLLER ON THE SUMP WILL SEND A PUMP RUN STATUS SIGNAL AND A GENERAL ALARM TO THE PSS.
2. THE SUMP PUMPS WILL SEND THE DRAINS TO THE WEST POWER COMPLEX OIL/WATER SEPARATOR, WHICH WILL BE INSTALLED IN A LATER PACKAGE. UNTIL THE OIL/WATER SEPARATOR IS INSTALLED, THE SUMP PUMPS WILL PUMP THE DRAINS TO THE TEMPORARY STORAGE TANK T-04. A LEVEL SWITCH LSH-002 WILL ALARM UPON HIGH LEVEL IN THE TEMPORARY STORAGE TANK. IT WILL REQUIRE TRUCK UNLOADING.

REV.	DATE	DESCRIPTION	BY
0	03/06/2026	ISSUED FOR BID	LR

STATE OF LOUISIANA
Lane Richard
License No. 0047786
PROFESSIONAL ENGINEER IN MECHANICAL ENGINEERING

SEWERAGE AND WATER BOARD OF NEW ORLEANS

CONTRACT No. 1444

WEST POWER COMPLEX @ CWTP
FUEL OIL DELIVERY SYSTEM

PROCESS

SEQUENCE OF OPERATIONS

Jacobs

DATE		JOB NO.	D3483600

DESIGNED BY: L. RICHARD
FILE NAME: P-080.dwg

DR.	J.MORGAN
CK:	L.LINDLEY
AP:	L. RICHARD
LAST EDIT:	
SCALE:	
DATE:	03/06/2026

A/E DWG NO. P080

DWG. No. 12196-W-24

SET NO: SHEET NO: 58 OF 72

BID PACKAGE - NOT FOR CONSTRUCTION
REUSE OF DOCUMENTS: THIS DOCUMENT, AND THE IDEAS AND DESIGNS INCORPORATED HEREIN, AS AN INSTRUMENT OF PROFESSIONAL SERVICE, IS THE PROPERTY OF JACOBS AND IS NOT TO BE USED, IN WHOLE OR IN PART, FOR ANY OTHER PROJECT WITHOUT THE WRITTEN AUTHORIZATION OF JACOBS. © JACOBS 2022 ALL RIGHTS RESERVED.

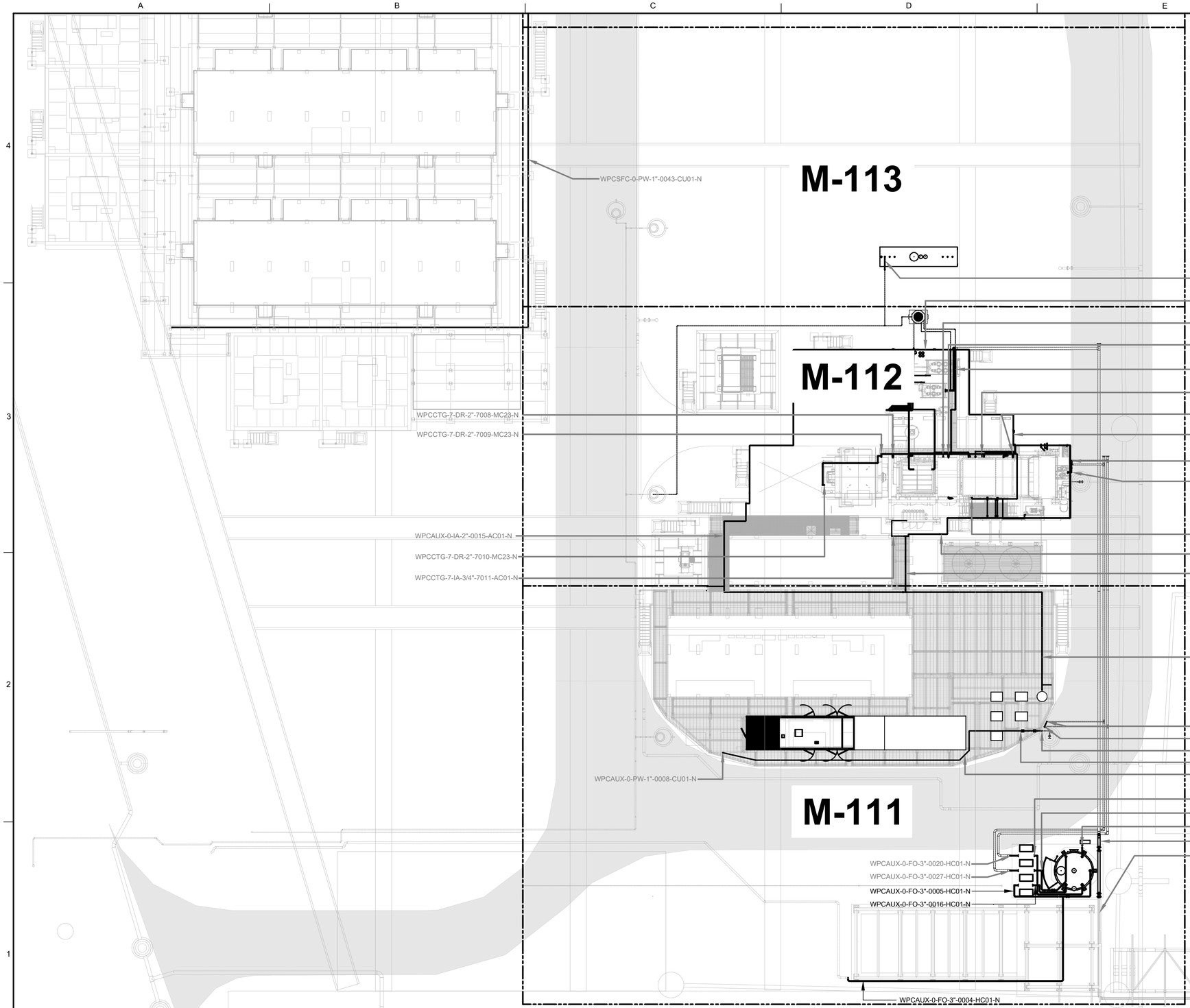

GENERAL NOTES:

A. FOR CLARITY, PIPING 2" AND SMALLER MAY NOT BE SHOWN. REFER TO PIPING AND INSTRUMENTATION DIAGRAMS FOR COMPLETE INVENTORY OF PIPING, VALVES, AND INSTRUMENTATION.

B. PROVIDE LOW POINT DRAINS AND HIGH POINT VENTS AS REQUIRED TO COMPLETELY DRAIN AND VENT ALL LIQUID SYSTEMS.

C. THE CONTENT OF THIS DRAWING IS BASED ON PRELIMINARY INFORMATION FOR EQUIPMENT NOT YET PURCHASED. IT IS THE RESPONSIBILITY OF THE CONTRACTOR TO VERIFY THE ACCURACY OF THE CONTENT AND MAKE REQUIRED CHANGES BASED ON CONTRACTOR FINAL DESIGN.

D. ALL GREYED-OUT TEXT REPRESENTS EQUIPMENT, PIPING, AND COMPONENTS INSTALLED UNDER PERVIOUS CONTRACTS. THESE ITEMS ARE SHOWN FOR REFERENCE ONLY AND ARE NOT INCLUDED IN THE SCOPE OF THIS CONTRACT. THE CONTRACTOR SHALL:
- FIELD VERIFY ALL EXISTING CONDITIONS INCLUDING PIPING, VALVES, INSTRUMENTS, AND CONNECTION POINTS PRIOR TO COMMENCING WORK.
- COORDINATE NEW INSTALLATIONS TO ENSURE PROPER FIT-UP AND CONNECTION TO EXISTING SYSTEMS WHERE REQUIRED.
- REPORT ANY DISCREPANCIES BETWEEN DRAWINGS AND ACTUAL FIELD CONDITIONS TO THE ENGINEER BEFORE PROCEEDING.
- PROTECT EXISTING EQUIPMENT AND PIPING FROM DAMAGE DURING CONSTRUCTION ACTIVITIES.
- COORDINATION WITH OTHER SCOPES - VERIFY CLEARANCES AND INTERFACES WITH ELECTRICAL, STRUCTURAL, AND CIVIL WORKS.

E. THE CONTRACTOR SHALL REFER TO ALL APPLICABLE MECHANICAL SPECIFICATIONS, PROJECT DRAWINGS, AND CONTRACT DOCUMENTS FOR COMPLETE INSTALLATION REQUIREMENTS, INCLUDING BUT NOT LIMITED TO:
- REQUIRED SUBMITTALS-THE CONTRACTOR SHALL PREPARE AND SUBMIT ALL REQUIRED DOCUMENTATION FOR REVIEW AND APPROVAL PRIOR TO COMMENCING WORK.
- MATERIAL STANDARDS AND APPROVALS- ENSURE ALL MATERIALS MEET SPECIFIED CODES AND STANDARDS
- INSTALLATION PROCEDURES-FOLLOW DETAILED INSTRUCTIONS FOR PIPING, SUPPORTS, INSTALLATION, AND EQUIPMENT ALIGNMENT.
- TESTING AND COMMISSIONING REQUIREMENTS - PERFORM PRESSURE TESTS, LEAK CHECKS, AND SYSTEM VERIFICATION AS OUTLINED IN SPECIFICATIONS.
- QUALITY ASSURANCE AND INSPECTION - COMPLY WITH INSPECTION HOLD POINTS AND DOCUMENTATION REQUIREMENTS

KEYED NOTES: (XXX)

LEGEND

TIE-IN POINT

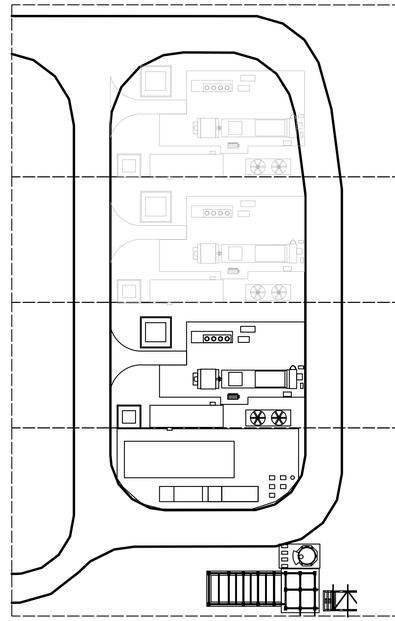

KEY PLAN

REV.	DATE	DESCRIPTION	BY
0	03/06/2026	ISSUED FOR BID	LR

STATE OF LOUISIANA
Lane Richard
License No. 0047786
PROFESSIONAL ENGINEER IN MECHANICAL ENGINEERING

SEWERAGE AND WATER BOARD OF NEW ORLEANS

CONTRACT No. 1444

WEST POWER COMPLEX @ CWTP
FUEL OIL DELIVERY SYSTEM

PROCESS MECHANICAL

ABOVE GROUND PIPING KEY PLAN

SCALE: 1"=16'

TRUE NORTH

C1 **PROCESS MECHANICAL OVERALL SITE PLAN**
SCALE: 1/16"=1'-0"

Jacobs

DATE		JOB NO.	D3483600
DESIGNED BY: L. RICHARD			
FILE NAME: M-110.dwg			
DR.	J.MORGAN	M110	
CK:	L.LINDLEY		
AP:	L.RICHARD		
LAST EDIT:		DWG. No.	12196-W-24
SCALE:	1/16" = 1'-0"		
DATE:	03/06/2026	SET NO:	SHEET NO: 59 OF 72

M-110.dwg 3/8/2026 8:31:28 PM

REUSE OF DOCUMENTS: THIS DOCUMENT AND THE IDEAS AND DESIGNS INCORPORATED HEREIN, AS AN INSTRUMENT OF PROFESSIONAL SERVICE, IS THE PROPERTY OF JACOBS AND IS NOT TO BE USED, IN WHOLE OR IN PART, FOR ANY OTHER PROJECT WITHOUT THE WRITTEN AUTHORIZATION OF JACOBS.
JACOBS 2022. ALL RIGHTS RESERVED.

BID PACKAGE - NOT FOR CONSTRUCTION

MATCH LINE
RE: M112, SEE REFERENCE DRAWINGS

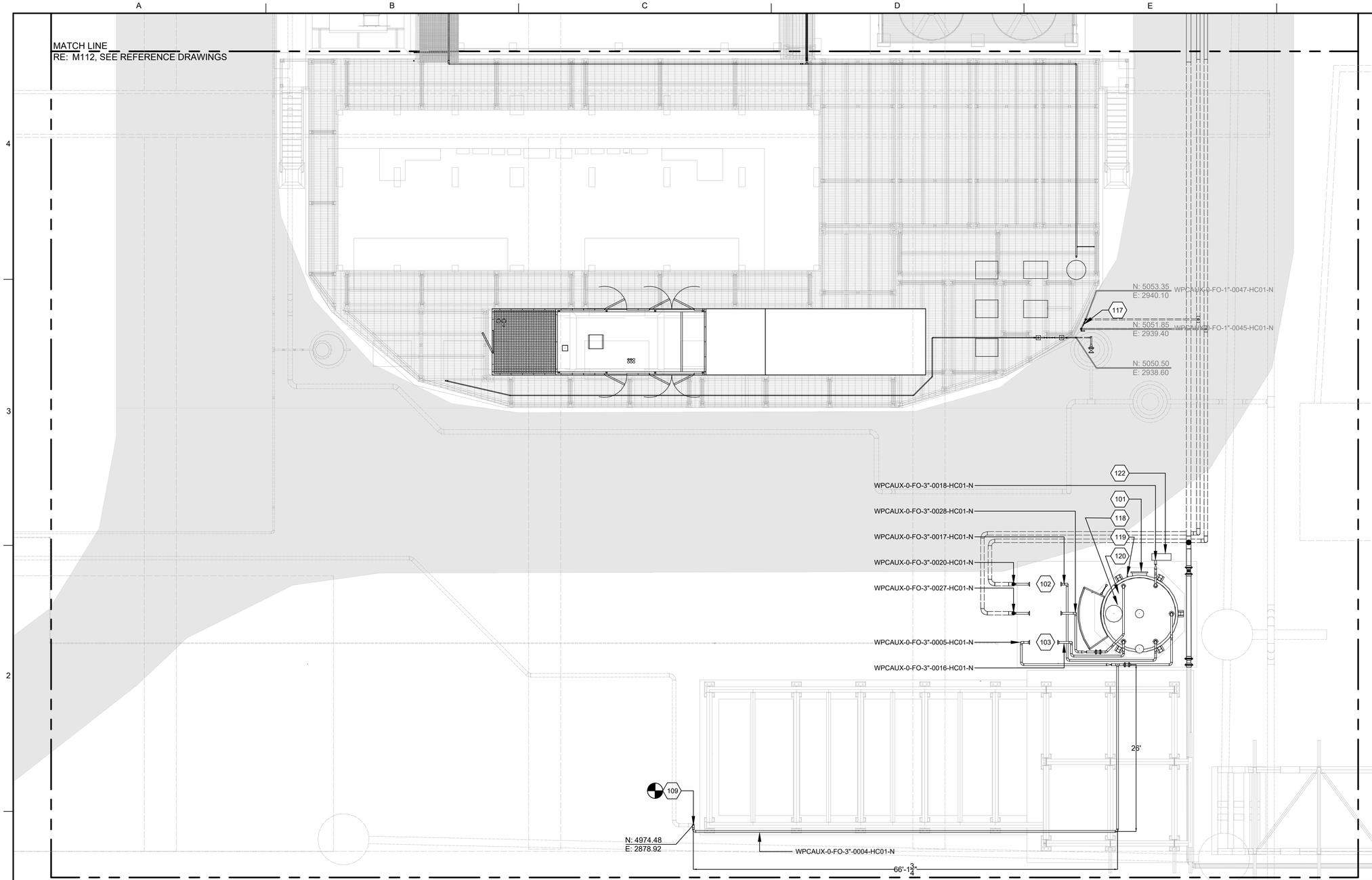

KEYED NOTES: (XXX)

101. FUEL OIL DAY TANK, T-01.
102. P-01 AND P-02. FUEL OIL SUPPLY PUMPS (EXISTING).
103. P-03 AND P-04. FUEL OIL RETURN PUMPS.
109. COORDINATE TIE-IN LOCATION WITH POWER ENGINEERS
117. EXISTING WPCAUX-0-FO-FIT-019 FUEL OIL FLOW METER.
118. EXISTING WPCAUX-0-FO-LIT-014 FUEL OIL LEVEL TRANSMITTER.
119. EXISTING WPCAUX-0-FO-LI-038 FUEL OIL LEVEL GAUGE.
120. EXISTING WPCAUX-0-FO-LSHH-037 FUEL OIL LEVEL SWITCH.
122. EXISTING FUEL OIL UNLOADING STATION, SPILL PREVENTION CONTAINER.

LEGEND

TIE-IN POINT

0 4' 8' 16' 24'
SCALE: 1"=8'

TRUE NORTH

C1 **PROCESS MECHANICAL PLAN - WPCAUX**
1/8"=1'-0"

GENERAL NOTES:

A. THE CONTENT OF THIS DRAWING IS BASED ON PRELIMINARY INFORMATION FOR EQUIPMENT NOT YET PURCHASED. IT IS THE RESPONSIBILITY OF THE CONTRACTOR TO VERIFY THE ACCURACY OF THE CONTENT AND MAKE REQUIRED CHANGES BASED ON CONTRACTOR FINAL DESIGN.
B. ALL FUEL OIL PIPING AND CONNECTIONS TO THE DAY TANK SHALL BE REVIEWED AND FIELD VERIFIED BEFORE INSTALLING.
C. ALL GREYED-OUT TEXT REPRESENTS EQUIPMENT, PIPING, AND COMPONENTS INSTALLED UNDER PERVIOUS CONTRACTS. THESE ITEMS ARE SHOWN FOR REFERENCE ONLY AND ARE NOT INCLUDED IN THE SCOPE OF THIS CONTRACT. THE CONTRACTOR SHALL:
- FIELD VERIFY ALL EXISTING CONDITIONS INCLUDING PIPING, VALVES, INSTRUMENTS, AND CONNECTION POINTS PRIOR TO COMMENCING WORK.
- COORDINATE NEW INSTALLATIONS TO ENSURE PROPER FIT-UP AND CONNECTION TO EXISTING SYSTEMS WHERE REQUIRED.
- REPORT ANY DISCREPANCIES BETWEEN DRAWINGS AND ACTUAL FIELD CONDITIONS TO THE ENGINEER BEFORE PROCEEDING.
- PROTECT EXISTING EQUIPMENT AND PIPING FROM DAMAGE DURING CONSTRUCTION ACTIVITIES.
- COORDINATION WITH OTHER SCOPES - VERIFY CLEARANCES AND INTERFACES WITH ELECTRICAL, STRUCTURAL, AND CIVIL WORKS.

D. THE CONTRACTOR SHALL REFER TO ALL APPLICABLE MECHANICAL SPECIFICATIONS, PROJECT DRAWINGS, AND CONTRACT DOCUMENTS FOR COMPLETE INSTALLATION REQUIREMENTS, INCLUDING BUT NOT LIMITED TO:
- REQUIRED SUBMITTALS-THE CONTRACTOR SHALL PREPARE AND SUBMIT ALL REQUIRED DOCUMENTATION FOR REVIEW AND APPROVAL PRIOR TO COMMENCING WORK.
- MATERIAL STANDARDS AND APPROVALS- ENSURE ALL MATERIALS MEET SPECIFIED CODES AND STANDARDS
- INSTALLATION PROCEDURES-FOLLOW DETAILED INSTRUCTIONS FOR PIPING, SUPPORTS, INSTALLATION, AND EQUIPMENT ALIGNMENT.
- TESTING AND COMMISSIONING REQUIREMENTS - PERFORM PRESSURE TESTS, LEAK CHECKS, AND SYSTEM VERIFICATION AS OUTLINED IN SPECIFICATIONS.
- QUALITY ASSURANCE AND INSPECTION - COMPLY WITH INSPECTION HOLD POINTS AND DOCUMENTATION REQUIREMENTS

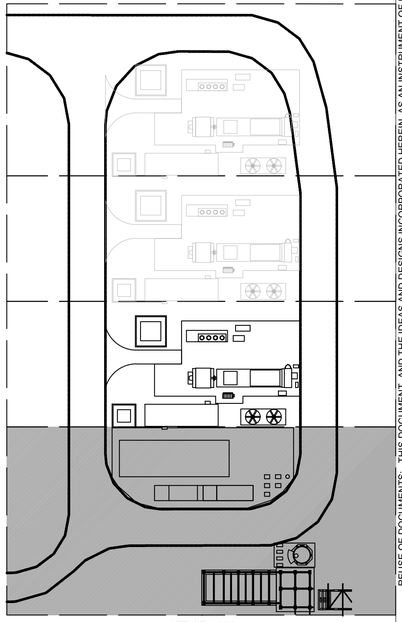

KEY PLAN

REV.	DATE	DESCRIPTION	BY
0	03/06/2026	ISSUED FOR BID	LR

STATE OF LOUISIANA
Lane Richard
License No. 0047786
PROFESSIONAL ENGINEER IN MECHANICAL ENGINEERING

SEWERAGE AND WATER BOARD OF NEW ORLEANS

CONTRACT No. 1444
WEST POWER COMPLEX @ CWTP
FUEL OIL DELIVERY SYSTEM

PROCESS MECHANICAL

ABOVE GROUND PLAN - WPCAUX

Jacobs

DATE		JOB NO.	D3483600
DESIGNED BY: L. RICHARD			
FILE NAME: M-111.dwg			

DR.	J.MORGAN	A/E DWG NO.	M111
CK:	L.LINDLEY		
AP:	L. RICHARD		
LAST EDIT:		DWG. No.	12196-W-24
SCALE:	1/8" = 1'-0"		
DATE:	03/06/2026	SET NO:	SHEET NO: 60 OF 72

M-111.dwg
3/8/2026
8:31:50 PM

© JACOBS 2022. ALL RIGHTS RESERVED.
REUSE OF DOCUMENTS: THIS DOCUMENT, AND THE IDEAS AND DESIGNS INCORPORATED HEREIN, AS AN INSTRUMENT OF PROFESSIONAL SERVICE, IS THE PROPERTY OF JACOBS AND IS NOT TO BE USED, IN WHOLE OR IN PART, FOR ANY OTHER PROJECT WITHOUT THE WRITTEN AUTHORIZATION OF JACOBS.

BID PACKAGE - NOT FOR CONSTRUCTION

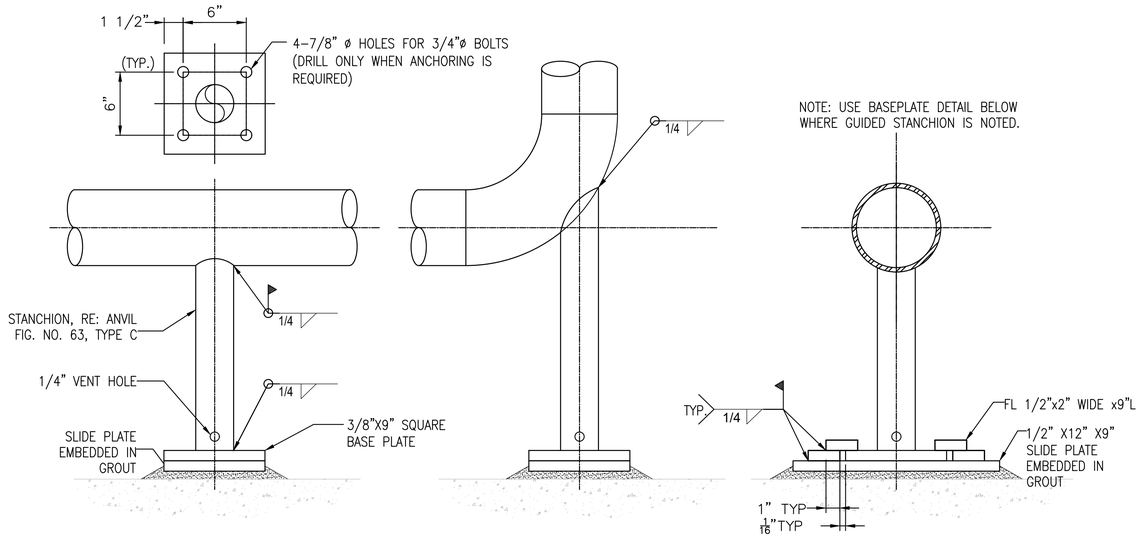

B3 TYPICAL PIPE STANCHION DETAIL
NTS

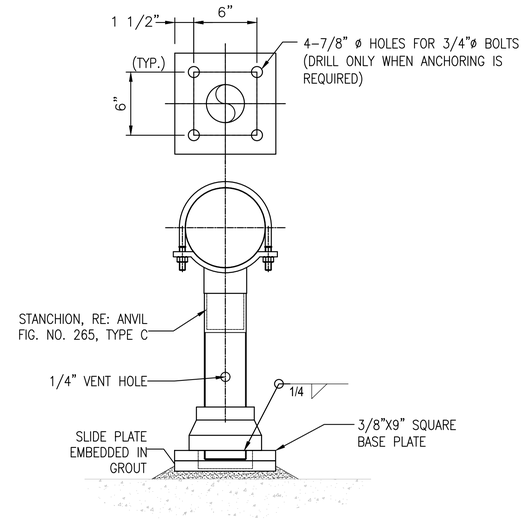

E3 TYPICAL PIPE SADDLE DETAIL
NTS

GENERAL NOTES:

A. PIPE SUPPORT DETAILS SHALL BE USED WITH MAXIMUM PIPE SPACING AS DEFINED BY ASME B31.1.
B. UNLESS SPECIFICALLY NOTED OTHERWISE, ALL PIPE SUPPORT HARDWARE SHALL BE HOT DIPPED GALVANIZED. REPAIR ANY DAMAGED GALVANIZED PLATING WITH A COATING OF "GALVALUM".
C. WHERE SUPPORTS ARE NOT SPECIFICALLY IDENTIFIED ON PLANS, CONTRACTOR SHALL PROVIDE PIPE SUPPORTS IN COMPLIANCE WITH SPECIFICATIONS. CONTRACTOR IS RESPONSIBLE FOR PROVIDING A COMPLETE PIPE SUPPORT SYSTEM.

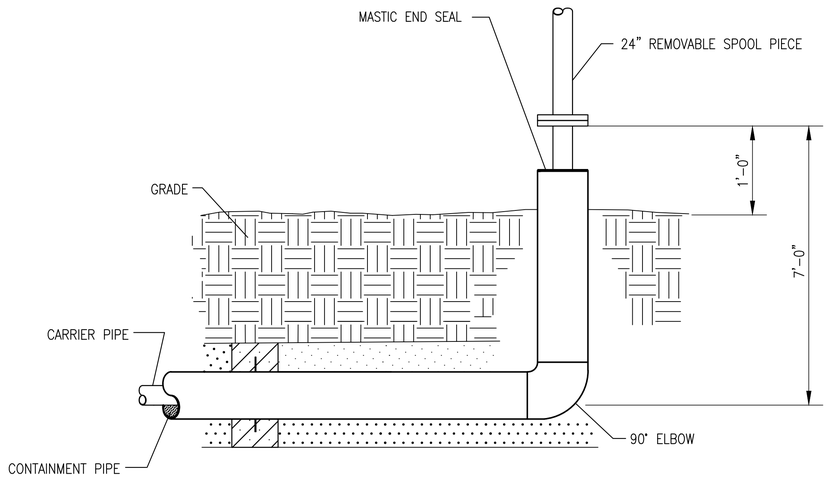

A1 DOUBLE WALL CONTAINMENT UNDERGROUND PIPE RISER DETAIL
NTS

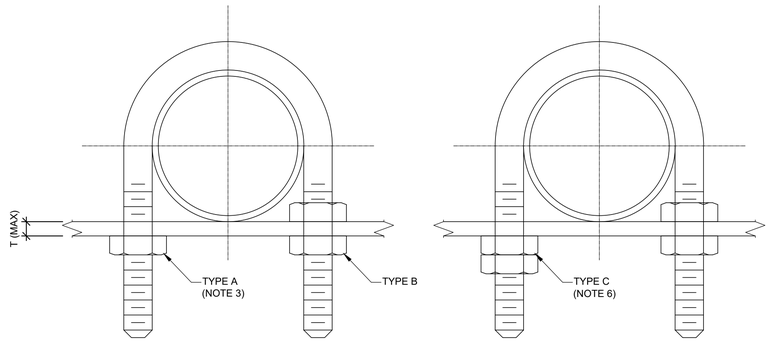

NOTES:

1. ALL MATERIAL TO BE ASTM-A36.
2. USE ANVIL FIG. NO. 137 OR APPROVED EQUAL. REFER TO ANVIL PRODUCT DATA FOR APPROPRIATE SIZING.
3. TYPE A USED UNLESS SPECIFIED OTHERWISE.
4. T(MAX) NOT TO EXCEED 1".
5. TYPE B CANNOT BE USED ON PIPE SIZES 1/2" THROUGH 2".
6. TYPE C USED FOR PULSATING SERVICE.
7. WHERE PIPE EXPANSION IS EXPECTED OR WHEN USED AS A GUIDE, USE TYPE A UP TO 2" AND TYPE B FOR PIPE SIZES GREATER THAN 2". LEAVE 1/8" GAP BETWEEN TOP OF PIPE AND U-BOLT.

D1 U-BOLT DETAIL
NTS

STATE OF LOUISIANA
Lane Richard
License No. 0047786
PROFESSIONAL
ENGINEER
IN
MECHANICAL ENGINEERING

REV.	DATE	DESCRIPTION	BY
0	03/06/2026	ISSUED FOR BID	LR

SEWERAGE AND WATER BOARD
OF NEW ORLEANS

CONTRACT No. 1444
WEST POWER COMPLEX @ CWTP
FUEL OIL DELIVERY SYSTEM

PROCESS MECHANICAL

MECHANICAL DETAILS

Jacobs

DATE		JOB NO.	D3483600
DESIGNED BY: L. RICHARD			
FILE NAME: M-500.dwg			

DR:	J.MORGAN
CK:	L.LINDLEY
AP:	L. RICHARD
LAST EDIT:	
SCALE:	NTS
DATE:	03/06/2026

A/E DWG NO. M-500
DWG. No. 12196-W-24
SET NO: SHEET NO: 61 OF 72

REUSE OF DOCUMENTS: THIS DOCUMENT, AND THE IDEAS AND DESIGNS INCORPORATED HEREIN, AS AN INSTRUMENT OF PROFESSIONAL SERVICE, IS THE PROPERTY OF JACOBS AND IS NOT TO BE USED, IN WHOLE OR IN PART, FOR ANY OTHER PROJECT WITHOUT THE WRITTEN AUTHORIZATION OF JACOBS.
© JACOBS 2022. ALL RIGHTS RESERVED.

BID PACKAGE - NOT FOR CONSTRUCTION

COMBUSTION TURBINE GENERATOR SCHEDULE

EQUIPMENT TAG	SERVICE	LOCATION	TYPE	FUEL GAS CONSUMPTION - LHV (MMBTU/HR)	INLET AIR TEMPERATURE (°F)	EXHAUST FLOW (LB/HR)	EXHAUST TEMP (°F)	NET HEAT RATE - LHV (BTU/KW-HR)	NET POWER OUTPUT (KW)	VOLTAGE (KV)	FREQUENCY (HERTZ)	PHASE	POWER FACTOR	MANUFACTURER	MODEL	NOTE
WPCCTG-7-CTG-7	COMBUSTION TURBINE GENERATOR	WEST POWER COMPLEX SITE, OUTDOORS	DUAL FUEL COMBUSTION TURBINE	197.85	59	552,451	870	8,875	22,294	13.8	60	3	0	SOLAR	MA	1, 2

NOTES:
1. PERFORMANCE INFORMATION SHOWN HERE IS AT ISO CONDITIONS (59 DEG F AMBIENT TEMPERATURE) WHILE BURNING NATURAL GAS.
2. COMBUSTION TURBINE PACKAGE INCLUDING GENERATOR, AUXILIARIES, FUEL GAS COMPRESSOR, AND INTERCONNECTING PIPING ALL SUPPLIED UNDER CONTRACT PACKAGE 1438.

GENERATOR SCHEDULE

EQUIPMENT TAG	SERVICE	LOCATION	TYPE	NET OUTPUT (KW)	VOLTAGE (V)	FREQUENCY (HERTZ)	PHASE	MANUFACTURER	MODEL	DIMENSIONS	QTY	NOTES
WPCAUX-0-EMV60-DG-01	EMERGENCY DIESEL GENERATOR	WEST POWER COMPLEX SITE, OUTDOORS	ENGINE GENERATOR	2,000	4,160	60	3	KOHLER	2000REOZMD	167"H x 124" x 511"L	1	1

NOTES:
1. EMERGENCY DIESEL GENERATOR TO BE PROCURED IN FUTURE PACKAGE, NOT PART OF CP-1444. MODEL SHOWN ABOVE IS BASIS OF DESIGN. BASIS INCLUDES 1,350 GAL SUB BASE FUEL TANK.

PUMP SCHEDULE

EQUIPMENT TAG	SERVICE	LOCATION	TYPE	MOTOR HP	VOLTAGE (V)	FREQUENCY (HERTZ)	PHASE	MANUFACTURER	MODEL	DIMENSIONS	QTY	NOTES
WPCAUX-0-FO-P-01	FUEL OIL FORWARDING SUPPLY	WEST POWER COMPLEX SITE, OUTDOORS	POSITIVE DISPLACEMENT	10	480	60	3	VIKING	L8124A		1	
WPCAUX-0-FO-P-02	FUEL OIL FORWARDING SUPPLY	WEST POWER COMPLEX SITE, OUTDOORS	POSITIVE DISPLACEMENT	10	480	60	3	VIKING	L8124A		1	
WPCAUX-0-FO-P-03	FUEL OIL FORWARDING RETURN	WEST POWER COMPLEX SITE, OUTDOORS	POSITIVE DISPLACEMENT	10	480	60	3	VIKING	L8124A		1	2
WPCAUX-0-FO-P-04	FUEL OIL FORWARDING RETURN	WEST POWER COMPLEX SITE, OUTDOORS	POSITIVE DISPLACEMENT	10	480	60	3	VIKING	L8124A		1	2
WPCCTG-7-DR-SP-01	WASTE WATER FORWARDING PUMP	WEST POWER COMPLEX SITE, OUTDOORS	VERTICAL SUMP	1.5	480	60	3	WEIL	1622		1	
WPCCTG-7-DR-SP-02	WASTE WATER FORWARDING PUMP	WEST POWER COMPLEX SITE, OUTDOORS	VERTICAL SUMP	1.5	480	60	3	WEIL	1622		1	
WPCCTG-8-DR-SP-01	WASTE WATER FORWARDING PUMP	WEST POWER COMPLEX SITE, OUTDOORS	VERTICAL SUMP	1.5	480	60	3	WEIL	1622		1	1
WPCCTG-8-DR-SP-02	WASTE WATER FORWARDING PUMP	WEST POWER COMPLEX SITE, OUTDOORS	VERTICAL SUMP	1.5	480	60	3	WEIL	1622		1	1
WPCCTG-9-DR-SP-01	WASTE WATER FORWARDING PUMP	WEST POWER COMPLEX SITE, OUTDOORS	VERTICAL SUMP	1.5	480	60	3	WEIL	1622		1	1
WPCCTG-9-DR-SP-02	WASTE WATER FORWARDING PUMP	WEST POWER COMPLEX SITE, OUTDOORS	VERTICAL SUMP	1.5	480	60	3	WEIL	1622		1	1

NOTES:
1. FUTURE EQUIPMENT.
2. CONTRACT 1444 SCOPE

© JACOBS 2022. ALL RIGHTS RESERVED.
REUSE OF DOCUMENTS: THIS DOCUMENT, AND THE IDEAS AND DESIGNS INCORPORATED HEREIN, AS AN INSTRUMENT OF PROFESSIONAL SERVICE, IS THE PROPERTY OF JACOBS AND IS NOT TO BE USED, IN WHOLE OR IN PART, FOR ANY OTHER PROJECT WITHOUT THE WRITTEN AUTHORIZATION OF JACOBS.

BID PACKAGE - NOT FOR CONSTRUCTION

REV.	DATE	DESCRIPTION	BY
0	03/06/2026	ISSUED FOR BID	LR

STATE OF LOUISIANA
Lane Richard
License No. 0047786
PROFESSIONAL ENGINEER IN MECHANICAL ENGINEERING

SEWERAGE AND WATER BOARD OF NEW ORLEANS

CONTRACT No. 1444

WEST POWER COMPLEX @ CWTP
FUEL OIL DELIVERY SYSTEM

PROCESS MECHANICAL

EQUIPMENT SCHEDULES

Jacobs

DATE		JOB NO.	D3483600
DESIGNED BY: L. RICHARD			
FILE NAME: M-601.dwg			

DR.	J.MORGAN
CK:	L.LINDLEY
AP:	L. RICHARD
LAST EDIT:	
SCALE:	NTS
DATE:	03/06/2026

A/E DWG NO. M601

DWG. No. 12196-W-24

SET NO: SHEET NO: 62 OF 72

M-601.dwg 3/8/2026 8:32:21 PM

PIPING SCHEDULE

SERVICE	LEGEND	PIPE SPECIFICATION	SIZE(S) (IN)	PIPING MATERIAL	NORMAL OPERATING PRESSURE	TEST PRESSURE	PRESSURE TEST	PIPE LABEL COLORS	PIPE LABELS	JOINT TYPE	NOTES
					PSIG	PSIG					
INSTRUMENT AIR	IA	AC01	2" AND SMALLER	CST SCH 80	150	180	P	BLUE-WHITE	INSTRUMENT AIR	SW, FL	
INSTRUMENT AIR	IA	AC01	2-1/2" AND LARGER	CST SCH 40	150	180	P	BLUE-WHITE	INSTRUMENT AIR	W, FL	
DRAIN PIPE	DR	MC23	2" AND SMALLER	CST SCH 80	5	PC	PC	BY SERVICE	BY SERVICE	SW, FL	NOTE 1
DRAIN PIPE	DR	MC23	2-1/2" AND LARGER	CST SCH 40	5	PC	PC	BY SERVICE	BY SERVICE	W, FL	NOTE 1
LOW PRESSURE FUEL GAS	FG	HC01	2-1/2" AND LARGER	CST SCH 40	180	270	H	YELLOW-BLACK	FUEL GAS	W, FL	NOTES 1, 2, 3, 5
FUEL OIL (ABOVE GROUND)	FO	HC01	2" AND SMALLER	CST SCH 80	100	150	H	BROWN-WHITE	FUEL OIL	SW, FL	NOTE 6
FUEL OIL (ABOVE GROUND)	FO	HC01	2-1/2" AND LARGER	CST SCH 40	100	150	H	BROWN-WHITE	FUEL OIL	W, FL	NOTE 6
FUEL OIL (BELOW GROUND)	FO	YHD	2" AND SMALLER	CST SCH 80	100	120	P	BROWN-WHITE	FUEL OIL	SW, FL	NOTE 4, NOTE 6
FUEL OIL (BELOW GROUND)	FO	YHD	2-1/2" AND LARGER	CST SCH 40	100	120	P	BROWN-WHITE	FUEL OIL	W, FL	NOTE 6
POTABLE WATER	PW	CU01	2" AND SMALLER	CU TYPE K	100	150	PC	GREEN-WHITE	POTABLE WATER	SO	
VENT PIPE	VT	MC23	2" AND SMALLER	CST SCH 80	5	PC	PC	BY SERVICE	BY SERVICE	SW, FL	NOTE 1
VENT PIPE	VT	MC23	2-1/2" AND LARGER	CST SCH 40	5	PC	PC	BY SERVICE	BY SERVICE	W, FL	NOTE 1

PIPING SCHEDULE LEGEND

PIPING MATERIAL		JOINT TYPE		PRESSURE TEST		
CISP	CAST IRON SOIL PIPE	FL	FLANGED	H	HYDROSTATIC	
CST	CARBON STEEL PIPE	GR	GROOVED	NA	NOT APPLICABLE	
CU	COPPER	NH	NO-HUB	NF	TEST PER APPROPRIATE NFPA STANDARD	
DI	CEMENT MORTAR LINED DUCTILE IRON	SO	SOLDERED	P	PNEUMATIC	
PVC	POLYVINYL CHLORIDE	SW	SOCKET WELD	PC	TEST PER INTERNATIONAL PLUMBING CODE	
MDPE	MEDIUM DENSITY POLYETHYLENE	TH	THREADED			
SS	STAINLESS STEEL	W	BUTT WELDED			
DI	DUCTILE IRON	SWH	SOLVENT WELDED JOINT			
		HF	HEAT FUSION			

GENERAL COMMENTS

A	EXTERNAL PIPING SHALL BE TESTED IN ACCORDANCE TO ASME B31.1 SECTION 137.3
B	HYDRO TESTS SHALL FOLLOW ASME B31.1 SECTION 137.4 AND BE A MINIMUM OF 1.5 THE DESIGN PRESSURE
C	PNEUMATIC TEST SHALL BE BETWEEN 1.2 AND 1.5 TIMES THE DESIGN PRESSURE PER ASME B31.1 SECTION 137.5
D	REFER TO THE LINE NUMBER DESIGNATIONS FOR THICKNESS REQUIREMENTS. ALL INSULATED PIPING LOCATED OUTDOORS TO HAVE ALUMINUM JACKET.
E	MATERIALS AND TESTING FOR DRAINS SHALL BE IN ACCORDANCE WITH THE SYSTEM TO WHICH THEY ARE ATTACHED. ATMOSPHERIC DRAINS DO NOT REQUIRE A PRESSURE TEST.

NOTES

1	REFER TO REQUIREMENTS IN ASME A13.1 FOR SPECIFIC INFORMATION REGARDING LABEL COLORS. ALL CARBON STEEL SURFACES THAT ARE NOT INSULATED SHALL BE PRIIMED AND FINISH COATED. SURFACE PREPARATION
	SHALL BE IN ACCORDANCE WITH PAINT MANUFACTURER'S REQUIREMENTS. COLORS TO BE IN ACCORDANCE WITH ASME A13.1. UNDERGROUND PIPE SHALL BE COATED WITH AN EPOXY COATING IN ACCORDANCE WITH
	SPECIFICATION SECTION 15 34 42 - UNDERGROUND PIPING.
2	UNLESS REQUIRED FOR CONNECTION TO EQUIPMENT OR INLINE COMPONENTS SUCH AS FLOW METERS AND CONTROL VALVES, VALVES ON THE GAS SYSTEM SHALL BE SOCKET WELDED OR BUTTWELDED.
3	WHERE REQUIRED FOR CONNECTIONS TO VENDOR FURNISHED EQUIPMENT, FLANGE CLASS MAY DIFFER FROM THE PIPING CLASS IDENTIFIED ON P-001. CONTRACTOR TO COORDINATE FLANGE RATINGS AT VENDOR INTERFACES.
4	BELOW GRADE FUEL OIL PIPE SHALL BE DOUBLE WALL CONTAINMENT PIPE. CONTAINMENT AND CARRIER PIPE SHALL BE OF SAME MATERIAL AND TESTED TO THE SAME TEST PRESSURE. THE CONTAINMENT PIPE SHALL BE COATED
	AND SUITABLE FOR BELOW GRADE SERVICE. CONTAINMENT PIPE SHALL CONTAIN LEAK DETECTION AND ALARM SYSTEM.
5	BELOW GRADE FUEL GAS PIPE SHALL BE EPOXY COATED AND CATHODICALLY PROTECTED IN ACCORDANCE WITH SPECIFICATION SECTION 48 50 90 - CATHODIC PROTECTION.
6	CONTRACT 1444 SCOPE

REV.	DATE	DESCRIPTION	BY
0	03/06/2026	ISSUED FOR BID	LR

STATE OF LOUISIANA
Lane Richard
License No. 0047786
PROFESSIONAL ENGINEER IN MECHANICAL ENGINEERING

SEWERAGE AND WATER BOARD OF NEW ORLEANS

CONTRACT No. 1444

WEST POWER COMPLEX @ CWTP
FUEL OIL DELIVERY SYSTEM

PROCESS MECHANICAL

PIPING SPECIFICATIONS SCHEDULE

Jacobs

DATE		JOB NO.	D3483600
DESIGNED BY:	L. RICHARD		
FILE NAME:	M-603.dwg		

DR:	J.MORGAN
CK:	L.LINDLEY
AP:	L. RICHARD
LAST EDIT:	
SCALE:	NTS
DATE:	03/06/2026

A/E DWG NO. M603

DWG. No. 12196-W-24

SET NO: SHEET NO: 63 OF 72

© JACOBS 2022. ALL RIGHTS RESERVED.
REUSE OF DOCUMENTS: THIS DOCUMENT, AND THE IDEAS AND DESIGNS INCORPORATED HEREIN, AS AN INSTRUMENT OF PROFESSIONAL SERVICE, IS THE PROPERTY OF JACOBS AND IS NOT TO BE USED, IN WHOLE OR IN PART, FOR ANY OTHER PROJECT WITHOUT THE WRITTEN AUTHORIZATION OF JACOBS.

BID PACKAGE - NOT FOR CONSTRUCTION

ABBREVIATIONS

AS	AIR SEPARATOR
AUX ELEC	AUXILIARY ELECTRICAL
BAS	BUILDING AUTOMATION SYSTEM
BFP	BOILER FEED PUMP
BLDG	BUILDING
BOP	BALANCE OF PLANT
BSG	BLACK START GENERATOR
CAB	CABINET
CCTV	CLOSED CIRCUIT TELEVISION
CT	COOLING TOWER
CTG	COMBUSTION TURBINE GENERATOR
CTR|R	CONTROL ROOM
CWP	COOLING WATER PUMP
DA	DEAERATOR
ENCL	ENCLOSURE
FGC	FUEL GAS COMPRESSOR
FOTP	FUEL OIL TRANSFER PUMP
FOFP	FUEL OIL FORWARDING PUMP
FPP	FIBER PATCH PANEL
HMI	HUMAN MACHINE INTERFACE
HRSG	HEAT RECOVERY STEAM GENERATOR
HVAC	HEATING, VENTILATION AND AIR CONDITIONING
IAC	INSTRUMENT AIR COMPRESSOR
IED	INTELLIGENT ELECTRONIC DEVICES
IOT	INTERNET OF THINGS
MW	MEGA-WATT
NG	NATURAL GAS
OWS	OPERATOR WORK STATION
PAC	PROCESS AUTOMATION CONTROLLER
PC	PERSONAL COMPUTER
PCHWP	PRIMARY CHILLED WATER PUMP
PCS	PLANT CONTROL SYSTEM
PDCS	POWER DISTRIBUTION CONTROL SYSTEM
PLC	PROGRAMMABLE LOGIC CONTROLLER
PSS	PROCESS SCADA SYSTEM
RTAC	REAL-TIME AUTOMATION CONTROLLER
SCADA	SUPERVISORY CONTROL AND DATA AQUISITION
SFC	STATIC FREQUENCY CONVERTER
STG	STEAM TURBINE GENERATOR
TES	THERMAL ENERGY STORAGE
TSP	TWISTED SHIELDED PAIR
UPS	UN-INTERRUPTIBLE POWER SUPPLY
WPC	WEST POWER COMPLEX

SYMBOLS

- PLC
- REMOTE I/O PANEL / VENDOR SUPPLIED CONTROLLER
- POINT I/O
- THIN CLIENT
- VIDEO WALL MONITOR
- ENGINEERING WORKSTATION
- RACK MOUNT SERVER
- WIFI ROUTER
- NETWORKING SWITCH
- KVM SWITCH
- FIREWALL
- INSTRUMENTATION / END DEVICES
- TRANSMITTER
- RTD/THERMOCOUPLE
- PROCESS SWITCH
- CONTROL VALVE
- SMART AS-P SERVER / CONTROLLER (BAS)
  BUILDING AUTOMATION CONTROLLER (BAS)
- ELECTRICAL PROTECTION RELAYS
- VIDEO CAMERA DEVICE
- PRINTER
- STRATIX SWITCH
- MEDIA CONVERTER
- REAL-TIME AUTOMATION CONTROLLER
- FIBER OPTIC PATCH PANEL
- AUDIO SOURCE
- VMS CAMERA
- HMI - PANEL MOUNT
- RACK MOUNT COMPUTER
- HISTORIAN SERVER
- WIFI DEVICE
- NETWORK CABINET SECURITY SECTION
- SECURITY CONTROL PANEL
- CARD READER
- DOOR SWITCH
- ELECTRONIC LOCK
- TIME CLOCK

NETWORKS & LINETYPES

- 48 STRAND SINGLE MODE FIBER OPTIC
- 24 STRAND SINGLE MODE FIBER OPTIC
- 12 STRAND SINGLE MODE FIBER OPTIC
- 6 STRAND SINGLE MODE FIBER OPTIC
- CAT 6A OR 5E AS APPLICABLE
- TERMINATIONS
- CONTINUATION OFF DWG

SHEET INDEX

DRAWING NO.	DESCRIPTION
IC001	NETWORK SYMBOLS AND LEGENDS
IC100	NETWORK OVERVIEW FOR WPC PRIOR TO WPC OPERATIONS BEING ONLINE
IC700	ELECTRICAL DISTRIBUTION FIBER OPTIC NETWORK OVERVIEW
IC702	FIBER COMMUNICATION DETAILS FOR FUEL OIL TRANSFER PUMP
IC711	GROUNDING AND BONDING DETAILS
IC712	STANDARD DETAILS
IC713	STANDARD DETAILS
IC714	STANDARD DETAILS
IC715	STANDARD DETAILS

TELECOM ABBREVIATIONS

ACS	ACCESS CONTROL SYSTEM
ACEG	ALTERNATING CURRENT ELECTRIC GROUND
AFC	ABOVE FINISHED CEILING
AFF	ABOVE FINISHED FLOOR
AFG	ABOVE FINISHED GRADE
ANN	ANNUNCIATOR
ARCH	ARCHITECTURAL
AV	AUDIO AND VISUAL
AWG	AMERICAN WIRE GUAGE
BAS	BUILDING AUTOMATION SYSTEM
BATT	BATTERY
BB	BACKBONE
BBV	BACKBONE VOICE
BET	BUILDING ENTRANCE TERMINAL
BLDG	BUILDING
BMS	BALANCED MAGNETIC SWITCH
C	CONDUIT
CAB	CABINET
CAT	CATEGORY
CCTV	CLOSED CIRCUIT TELEVISION
CFCI	CONTRACTOR FURNISHED / CONTRACTOR INSTALLED
CFOI	CONTRACTOR FURNISHED / OWNER INSTALLED
CLG	CEILING
CMH	COMMUNICATIONS MAINTENANCE HOLE
COB	CENTER OF BOX
COMM	COMMUNICATIONS
CONST	CONSTRUCTION
CONT	CONTINUATION
DIST	DISTRIBUTION
DWG	DRAWING
EF	ENTRANCE FACILITY
EL	ELEVATION
ELEC	ELECTRICAL
ELEV	ELEVATOR
ELV	EXTRA LOW VOLTAGE
EMER	EMERGENCY
EQPT	EQUIPMENT
EXIST	EXISTING
FA	FIRE ALARM
FACP	FIRE ALARM CONTROL PANEL
FBPP	FIBER BACKBONE PATCH PANEL
FIXT	FIXTURE
FL	FLOOR
FO	FIBER OPTIC
FOC	FIBER OPTIC CABLE
HCPP	HORIZONTAL COPPER PATCH PANEL
HFPP	HORIZONTAL FIBER PATCH PANEL
HOV	HORIZONTAL VOICE
IDS	INTRUSION DETECTION SYSTEM
JB	JUNCTION BOX
MFR	MANUFACTURER
MH	MOUNTING HEIGHT
MMF	MULTI MODE FIBER
MTD	MOUNTED
NIC	NOT IN CONTRACT
NTS	NOT TO SCALE
OFCI	OWNER FURNISHED / CONTRACTOR INSTALLED
OFOI	OWNER FURNISHED / OWNER INSTALLAED
OH	OVERHEAD
OSP	OUTSIDE PLANT
PA	PUBLIC ADDRESS
PB	PULL BOX
PBB	PRIMARY BONDING BUSBAR
PBX	PRIVATE BRANCH EXCHANGE
PC	PERSONAL COMPUTER
PLAS	PLASTIC
PP	PATCH PANEL
PR	PAIR
PWR	POWER
QTY	QUANTITY
RBB	RACK BONDING BUSBAR
RBC	RACK BONDING CONDUCTOR
RECP	RECEPTACLE
REQD	REQUIRED
RGS	RIGID GALVANIZED STEEL
RM	ROOM
RSC	RIGID STEEL CONDUIT
SBB	SECONDARY BONDING BUSBAR
SCRT	SECURITY
SECT	SECTION
SPEC	SPECIFICATION
SMF	SINGLE MODE FIBER
SP	SERVICE PROVIDER
SURF	SURFACE
SW	SWITCH
SYM	SYMMETRICAL
SYS	SYSTEMS
TBB	TELECOMMUNICATIONS BONDING BACKBONE
TBC	TELECOMMUNICATIONS BONDING
TEL	TELEPHONE
TELECOM	TELECOMMUNICATIONS
TER	TELECOMMUNICATIONS EQUIPMENT ROOM
TR	TELECOMMUNICATIONS ROOM
TYP	TYPICAL
UG	UNDERGROUND
UON	UNLESS OTHERWISE NOTED
UPS	UNINTERRUPTIBLE POWER SUPPLY
WAP	WIRELESS ACCESS POINT
WP	WEATHERPROOF
XFR	TRANSFER
XP	EXPLOSION PROOF

GENERAL TELECOM NOTES

1. ALL SYMBOLS, ABBREVIATIONS AND GENERAL NOTES SHOWN ARE NOT NECESSARILY USED ON THIS PROJECT.
2. SEE ONE-LINE DIAGRAM FOR CABLE SIZES, CONDUIT SIZES, AND DEVICES NOT SHOWN ON PLANS.
3. MOUNTING HEIGHTS FOR CEILING MOUNTED DEVICES ARE TO THE BOTTOM OF THE DEVICE, UNLESS OTHERWISE NOTED.
4. MOUNTING HEIGHTS ABOVE FINISHED FLOOR, TO CENTERLINE OF DEVICE, ARE AS FOLLOWS, UNLESS OTHERWISE NOTED.

TELEPHONE OUTLETS	18-INCHES
DATA OUTLETS WALL AND PUBLIC	18-INCHES
TELEPHONE OUTLETS	48-INCHES
COUNTER TOP OUTLETS (CT)	8 INCHES ABOVE COUNTER
WIRELESS ACCESS POINT	12-INCHES ABOVE FINISHED CEILING
HORN SPEAKERS	AS INDICATED
TELEVISION OUTLET (COAX)	AS INDICATED
CARD READER BACK BOX	40-INCHES
SPEAKER VOLUME CONTROL	40-INCHES

5. THE GENERAL CONDITIONS, SUPPLEMENT GENERAL CONDITIONS AND OTHER REQUIREMENTS OF DIVISION 1. THE ELECTRICAL, AUDIO VISUAL, AND SECURITY PLANS AND SPECIFICATIONS MAY APPLY TO THE WORK SPECIFIED.
6. COMMUNICATIONS CABLING INTEGRATOR HEREAFTER REFERRED TO AS "CONTRACTOR" MUST PROVIDE ALL TELECOM EQUIPMENT, CABLING, PATHWAYS AND ASSOCIATED MATERIALS, COMPONENTS, TOOLS AND LABOR TO COMPLETE TELECOMMUNICATIONS STRUCTURED CABLING SYSTEM AND PATHWAYS.
7. CONTRACTOR MUST CAREFULLY EXAMINE THE SITE TO DETERMINE THE EXTENT OF WORK AND CONDITION UNDER WHICH IT WILL BE DONE. REVIEW AND VERIFY CONTRACT DOCUMENTS IN RELATION TO FIELD CONDITIONS TO VERIFY ACCURACY. THE OWNER, OR THEIR DESIGNATED REPRESENTATIVE, SHALL BE CONSULTED AS NEEDED FOR CLARIFICATION OR DIRECTION REGARDING ANY PROJECT RELATED QUESTIONS; THE CONTRACTOR IS RESPONSIBLE FOR OBTAINING CLARIFICATION FROM THE OWNER, OR THEIR DESIGNATED REPRESENTATIVE, PRIOR TO PROCEEDING WITH THE WORK OR RELATED WORK IN QUESTION.
8. DISCREPANCIES BETWEEN THESE PLANS AND ACTUAL FIELD CONDITIONS SHALL BE BROUGHT TO THE IMMEDIATE ATTENTION OF THE GOVERNMENT, OR THEIR DESIGNATED REPRESENTATIVE, FOR CLARIFICATION.
9. REFER TO TECHNOLOGY CONTRACT DOCUMENTS, T DRAWINGS AND DIVISION 27 SPECIFICATIONS AS A UNIT AND IN WHOLE IN THE BIDDING AND INSTALLATION OF THIS PROJECT.
10. CONTRACTOR SHALL READ IN THEIR ENTIRETY ALL SECTIONS OF THE COMMUNICATIONS CABLING SYSTEM DOCUMENTS AND APPLY THEM AS APPROPRIATE FOR WORK IN THIS SECTION.
11. CONTRACTOR SHALL TAKE NECESSARY MEANS TO PROTECT COMMUNICATION SYSTEM COMPONENTS FROM MECHANICAL DAMAGE BEFORE, DURING AND AFTER CONSTRUCTION.
12. CONTRACTOR SHALL REFERENCE DIVISION 27 SPECIFICATIONS FOR ITEMIZED PRICING REQUIREMENTS.
13. PROVIDE 12-INCH BY 4-INCH BASKET TRAY FOR DATA CABLE. PROVIDE SEPARATE 6-INCH BY 4-INCH BASKET TRAY PATHWAYS FOR CAMERA CABLE AND SPEAKER CABLE.
14. FOR EXTERIOR CAMERAS PROVIDE JUNCTION BOXES AND CONDUITS SIZED FOR THE AMOUNT OF CABLE TO CAMERA. PROVIDE JUNCTION BOXES TO PREVENT CUMULATIVE BENDS OF 180-DEGREES BETWEEN PULL POINTS. REFER TO SHEET T-601 FOR ADDITIONAL INFORMATION.
15. CABLING SHALL MEET REQUIREMENTS UNDER TIA-568B.
16. CONNECTOR TYPE: TYPE LC COMPLYING WITH TIA-604-10.
17. REFERENCE SPECS:
    - 270526 GROUNDING AND BONDING FOR COMMUNICATION SYSTEMS.
    - 270548.16 SEISMIC CONTROLS FOR COMMUNICATION SYSTEMS.
    - 271323 COMMUNICATION OPTICAL FIBER BACKBONE CABLING.
    - 271513 COMMUNICATIONS COPPER HORIZONTAL CABLING.
    - 271523 COMMUNICATIONS OPTICAL FIBER HORIZONTAL CABLING.
    - 409533 PROCESS CONTROL NETWORKS.

© JACOBS 2022. ALL RIGHTS RESERVED.
REUSE OF DOCUMENTS: THIS DOCUMENT, AND THE IDEAS AND DESIGNS INCORPORATED HEREIN, AS AN INSTRUMENT OF PROFESSIONAL SERVICE, IS THE PROPERTY OF JACOBS AND IS NOT TO BE USED, IN WHOLE OR IN PART, FOR ANY OTHER PROJECT WITHOUT THE WRITTEN AUTHORIZATION OF JACOBS.

BID PACKAGE - NOT FOR CINSTRUCTION

REV.	DATE	DESCRIPTION	BY
0	03/06/2026	ISSUED FOR BID	JH

STATE OF LOUISIANA
M. YORK BROGDEN
License No. 41618
PROFESSIONAL ENGINEER
2026.03.06 08:51:44-05'00'

SEWERAGE AND WATER BOARD OF NEW ORLEANS

CONTRACT No. 1444

WEST POWER COMPLEX @ CWTP
FUEL OIL DELIVERY SYSTEM

I&C

NETWORK SYMBOLS AND LEGEND

Jacobs

JOB NO.	D3393001
DWG NO.	IC001_D3393001
DESIGNED BY:	J HANDWORK
FILE NAME:	IC001_D3393001_1444.dgn

DR.	J JARVIS
CK:	J HANDWORK
AP:	S REISER
LAST EDIT:	
SCALE:	AS SHOWN
DATE:	03/06/2026

A/E DWG NO. IC001

DWG. No. 12196-W-24

SET NO: SHEET NO: 64 OF 72

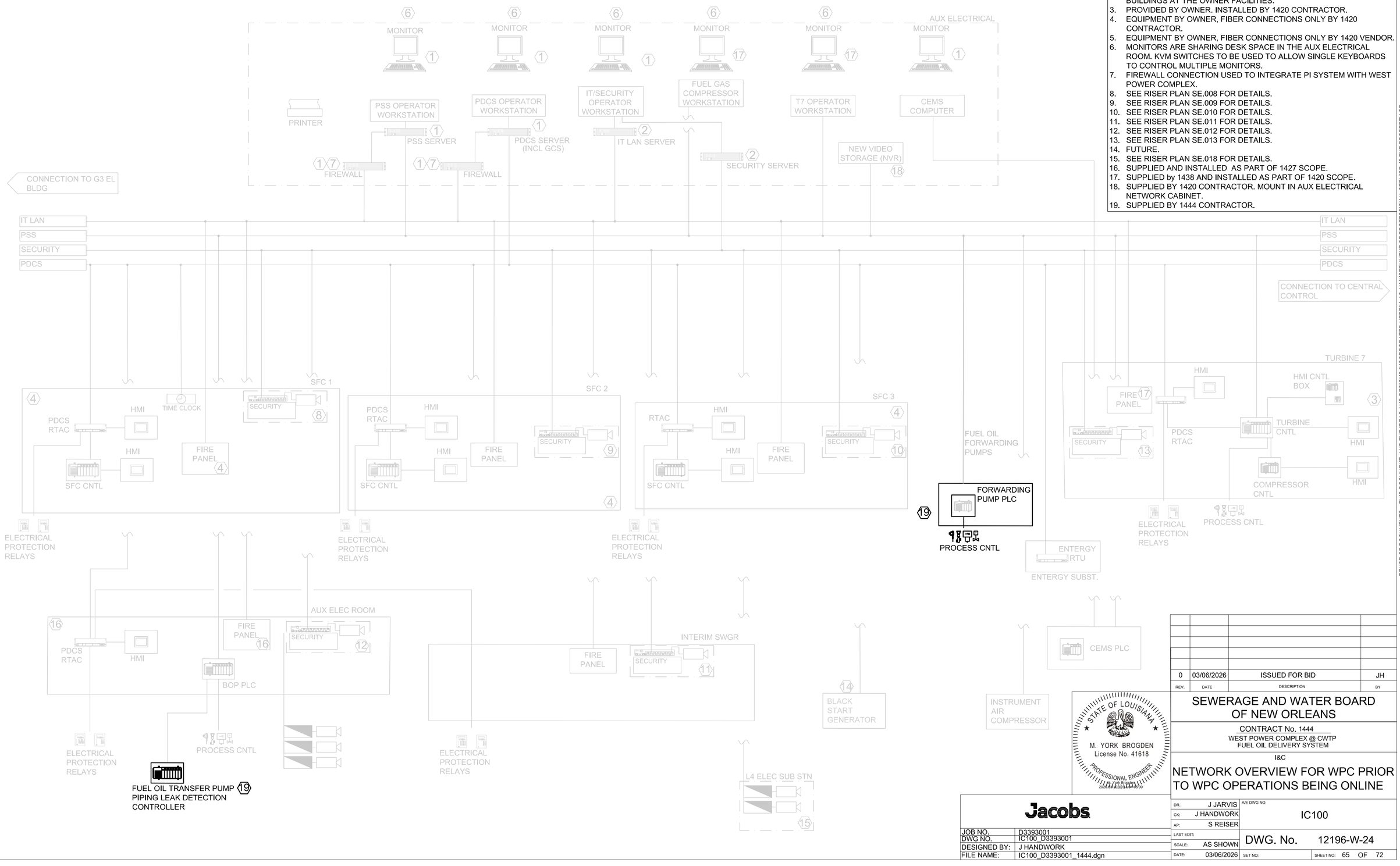

KEY NOTES

1. WORKSTATION, FIREWALLS AND SERVERS PROVIDED BY OWNER BUT INSTALLED AND PROGRAMMED BY CONTRACTOR. KEYBOARD, MOUSE AND MONITOR BY ARE PROVIDED BY CONTRACTOR.
2. IT AND SECURITY SERVER ARE EXISTING AND LOCATED IN OTHER BUILDINGS AT THE OWNER FACILITIES.
3. PROVIDED BY OWNER. INSTALLED BY 1420 CONTRACTOR.
4. EQUIPMENT BY OWNER, FIBER CONNECTIONS ONLY BY 1420 CONTRACTOR.
5. EQUIPMENT BY OWNER, FIBER CONNECTIONS ONLY BY 1420 VENDOR.
6. MONITORS ARE SHARING DESK SPACE IN THE AUX ELECTRICAL ROOM. KVM SWITCHES TO BE USED TO ALLOW SINGLE KEYBOARDS TO CONTROL MULTIPLE MONITORS.
7. FIREWALL CONNECTION USED TO INTEGRATE PI SYSTEM WITH WEST POWER COMPLEX.
8. SEE RISER PLAN SE.008 FOR DETAILS.
9. SEE RISER PLAN SE.009 FOR DETAILS.
10. SEE RISER PLAN SE.010 FOR DETAILS.
11. SEE RISER PLAN SE.011 FOR DETAILS.
12. SEE RISER PLAN SE.012 FOR DETAILS.
13. SEE RISER PLAN SE.013 FOR DETAILS.
14. FUTURE.
15. SEE RISER PLAN SE.018 FOR DETAILS.
16. SUPPLIED AND INSTALLED AS PART OF 1427 SCOPE.
17. SUPPLIED by 1438 AND INSTALLED AS PART OF 1420 SCOPE.
18. SUPPLIED BY 1420 CONTRACTOR. MOUNT IN AUX ELECTRICAL NETWORK CABINET.
19. SUPPLIED BY 1444 CONTRACTOR.

REV.	DATE	DESCRIPTION	BY
0	03/06/2026	ISSUED FOR BID	JH

M. YORK BROGDEN
License No. 41618
PROFESSIONAL ENGINEER
STATE OF LOUISIANA

SEWERAGE AND WATER BOARD OF NEW ORLEANS

CONTRACT No. 1444

WEST POWER COMPLEX @ CWTP
FUEL OIL DELIVERY SYSTEM

I&C

NETWORK OVERVIEW FOR WPC PRIOR TO WPC OPERATIONS BEING ONLINE

Jacobs

JOB NO.	D3393001
DWG NO.	IC100_D3393001
DESIGNED BY:	J HANDWORK
FILE NAME:	IC100_D3393001_1444.dgn

DR.	J JARVIS
CK:	J HANDWORK
AP:	S REISER
LAST EDIT:	
SCALE:	AS SHOWN
DATE:	03/06/2026

A/E DWG NO. IC100

DWG. No. 12196-W-24

SET NO: SHEET NO: 65 OF 72

REUSE OF DOCUMENTS: THIS DOCUMENT, AND THE IDEAS AND DESIGNS INCORPORATED HEREIN, AS AN INSTRUMENT OF PROFESSIONAL SERVICE, IS THE PROPERTY OF JACOBS AND IS NOT TO BE USED, IN WHOLE OR IN PART, FOR ANY OTHER PROJECT WITHOUT THE WRITTEN AUTHORIZATION OF JACOBS.
© JACOBS 2022. ALL RIGHTS RESERVED.

BID PACKAGE - NOT FOR CINSTRUCTION

GENERAL NOTES

1. FIBER OPTIC CONNECTION FROM CENTRAL CONTROL TO AUX ELEC ROOM AND L4 ELEC SUB STN TO AUX ELEC ROOM ARE INTENDED TO PROVIDE REDUNDANT PATHWAYS FROM THE WPC AREA TO COMMUNICATE TO THE PLANT.
2. CONNECTION OF FUEL FORWARDING PUMPS TO THE CHEMICAL TREATMENT BUILDING TO CONNECT INTO THE MAIN NETWORK IS THE CLOSEST PATH TO GET THE PUMP DATA ON THE FIBER OPTIC NETWORK THAT WILL ULTIMATELY PATCH INTO THE WPCAUX-0 AREA.

KEY NOTES

1. REFER TO DRAWING E01-40.
2. FUTURE.
3. HOLD.

WPCL4-0-NET-CAB-01
L4 ELEC. SUB STN

WPCOC0SWBNOFOPP01-D02
WPCOC0SWBNOFOPP01-D01
2
WPC OPERATIONS CENTER (FUTURE)
WPCOC-0-SWBNO-FOPP-01

3
ENTERGY SUB STN INTERFACE BOX
SSWPC0EMV60FSB01-D01
SSWPC-0-EMV60-FSB-01

WPCCTG-7-NET-CAB-01
WPCCTG7NETCAB01-D01
WPCCTG7NETCAB01-D02
TURBINE 7 PATCH PANEL

WPCCEMS0NETCAB01-D01
CEMS PANEL
WPCCEMS-0-NET-CAB-01

WPCSFC1NETCAB01-D02
WPCSFC-1-NET-CAB-01
SFC ENCL 1
WPCSFC1NETCAB01-D01

WPCSFC2NETCAB01-D01
WPCSFC2NETCAB01-D02
SFC ENCL 2
WPCSFC-2-NET-CAB-01

WPCCTG-8-NET-CAB-01
WPCCTG8NETCAB01-D01
WPCCTG8NETCAB01-D02
TURBINE 8 PATCH PANEL (FUTURE)
2

WPCCTG9NETCAB01-D01
WPCCTG9NETCAB01-D02
TURBINE 9 PATCH PANEL (FUTURE)
2
WPCCTG-9-NET-CAB-01

WPCSFC-3-NET-CAB-01
WPCSFC3NETCAB01-D01
WPCSFC3NETCAB01-D02
SFC ENCL 3

WPCAUX-T-NET-CAB-01
WPCAUXTNETCAB01-D01
WPCAUXTNETCAB01-D02
INTERIM SWITCH GEAR

WPCIAC0NETCAB01-D01
INSTRUMENT AIR COMPRESSOR
WPCIAC-0-NET-CAB-01

CCWPC0NETCAB01-D02
CCWPC0NETCAB01-D01
WPCBSG0NETCAB01-D01

AUX ELEC ROOM
PATCH PANEL
WPCAUX-0-SWBNO-FOPP-01
NET CAB
WPCAUX-NET-CAB-01
PDCS
WPCAUX-PDCS-CAB-01
WPCAUX-0-BOP-PLC-01
BOP CTRL

WPCL40NETCAB01-D01
WPCL40NETCAB01-D02

CENTRAL CONTROL
CCWPC-0-NET-CAB-01

WPCCTB0NETCAB01-D01
CHEMICAL TREATMENT BLDG
WPCCTB-0-NET-CAB-01

2
1
CWPBFS0FOFPFOPP01-D01
FUEL OIL FORWARDING PUMPS
CWPBFS-0-FOFP-FOPP-01

BLACK START GENERATOR (FUTURE)
2
WPCBSG-0-NET-CAB-01

REV.	DATE	DESCRIPTION	BY
0	03/06/2026	ISSUED FOR BID	JH

STATE OF LOUISIANA
M. YORK BROGDEN
License No. 41618
PROFESSIONAL ENGINEER
IN PRACTICE
2026.03.06 11:12:00 -05'00'

SEWERAGE AND WATER BOARD OF NEW ORLEANS

CONTRACT No. 1444

WEST POWER COMPLEX @ CWTP
FUEL OIL DELIVERY SYSTEM

I&C

ELECTRICAL DISTRIBUTION FIBER OPTIC NETWORK OVERVIEW

Jacobs

JOB NO.	D3393001
DWG NO.	IC700_D3393001
DESIGNED BY:	J HANDWORK
FILE NAME:	IC700_D3393001_1444.dgn

DR.	J JARVIS
CK:	J HANDWORK
AP:	S REISER
LAST EDIT:	
SCALE:	AS SHOWN
DATE:	03/06/2026

A/E DWG NO.
IC700

DWG. No. 12196-W-24

SET NO:
SHEET NO: 66 OF 72

© JACOBS 2022. ALL RIGHTS RESERVED.
REUSE OF DOCUMENTS: THIS DOCUMENT, AND THE IDEAS AND DESIGNS INCORPORATED HEREIN, AS AN INSTRUMENT OF PROFESSIONAL SERVICE, IS THE PROPERTY OF JACOBS AND IS NOT TO BE USED, IN WHOLE OR IN PART, FOR ANY OTHER PROJECT WITHOUT THE WRITTEN AUTHORIZATION OF JACOBS.

BID PACKAGE - NOT FOR CINSTRUCTION

KEY NOTES

1. REFERENCE POWER ENGINEERS DRAWINGS FOR DETAILS ON THE INTERCONNECTION BETWEEN THE CHEMICAL TREATMENT BUILDING AND THE FUEL OIL FORWARDING PUMP PLC.

1

FOFP FOPP

CWPBFS-0-FOTP-FOPP-01

CWPBFS0FOTPFOPP01-D01

CHEMICAL TREATMENT BLDG

WPCCTB-0-NET-CAB-01

REV.	DATE	DESCRIPTION	BY
0	03/06/2026	ISSUED FOR BID	JH

STATE OF LOUISIANA
M. YORK BROGDEN
License No. 41618
PROFESSIONAL ENGINEER
Not yet Expired
2026.03.06 14:49:05-06'00'

SEWERAGE AND WATER BOARD OF NEW ORLEANS

CONTRACT No. 1444

WEST POWER COMPLEX @ CWTP
FUEL OIL DELIVERY SYSTEM

I&C

FIBER COMMUNICATION DETAILS FOR FUEL OIL FORWARDING PUMPS

Jacobs

JOB NO.	D3393001
DWG NO.	IC702_D3393001
DESIGNED BY:	J HANDWORK
FILE NAME:	IC702_D3393001_1444.dgn

DR.	J JARVIS
CK:	J HANDWORK
AP:	S REISER
LAST EDIT:	
SCALE:	AS SHOWN
DATE:	03/06/2026

A/E DWG NO. IC702

DWG. No. 12196-W-24

SET NO:

SHEET NO: 67 OF 72

© JACOBS 2022. ALL RIGHTS RESERVED.
REUSE OF DOCUMENTS: THIS DOCUMENT, AND THE IDEAS AND DESIGNS INCORPORATED HEREIN, AS AN INSTRUMENT OF PROFESSIONAL SERVICE, IS THE PROPERTY OF JACOBS AND IS NOT TO BE USED, IN WHOLE OR IN PART, FOR ANY OTHER PROJECT WITHOUT THE WRITTEN AUTHORIZATION OF JACOBS.

BID PACKAGE - NOT FOR CINSTRUCTION

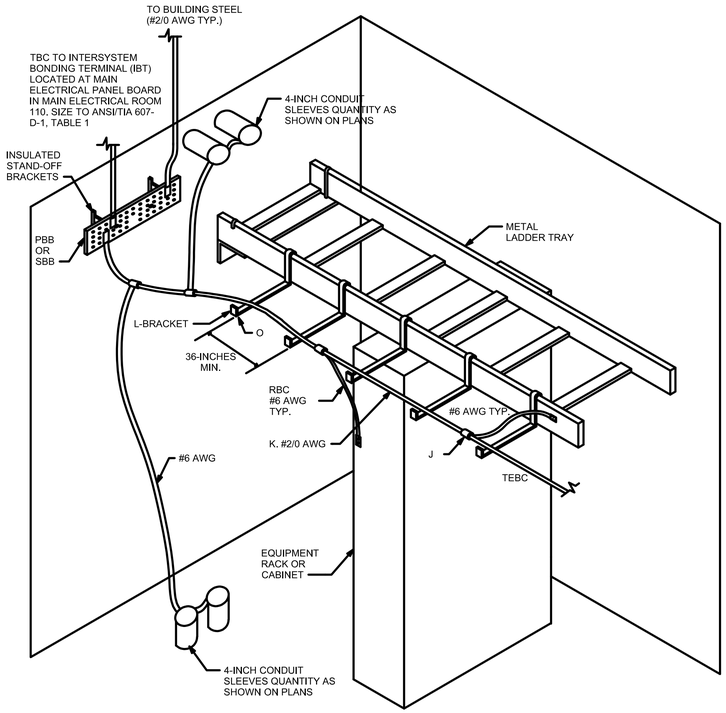

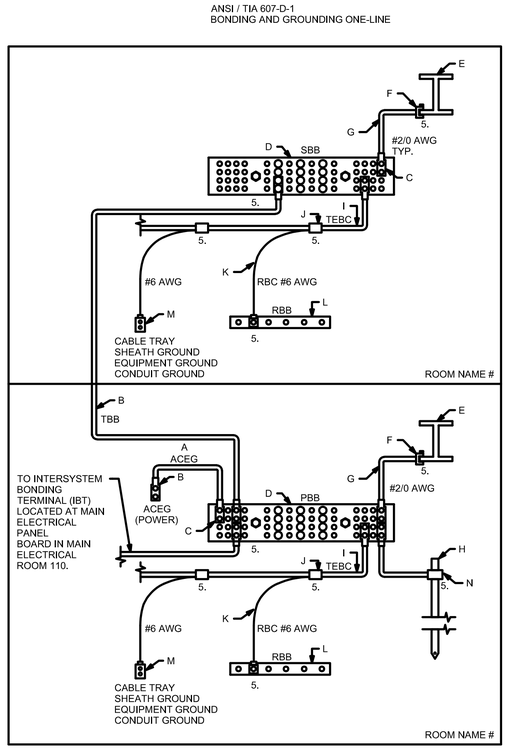

GENERAL NOTES

1. COMPLY WITH ANSI/TIA-607-D-1 6.2.1 FOR PBB'S.
2. COMPLY WITH ANSI/TIA-607-D-1 6.2.1 FOR RBB'S.
3. SIZE TBB/BBC CONDUCTORS TO ANSI / TIA-607-D-1, TABLE 1, UON, CONDUCTORS SHALL BE THE SAME SIZE WHEN CONNECTED.
4. BONDING CONNECTIONS ARE EITHER LISTED EXOTHERMIC WELDS,LISTED IRREVERSIBLE CONNECTORS, OR LISTED MECHANICAL CONNECTORS. CONNECTORS, LUGS, AND COMPONENTS SHALL BE LISTED FOR THE PURPOSE.

KEY NOTES

A. IF PANELBOARD IS LOCATED IN SAME SPACE, BOND PBB TO ACEG BUS. MAINTAIN 12-INCHES SEPARATION. THE TBC CONDUCTOR BONDING TO THE ELECTRICAL PANEL SHALL BE NO SMALLER THAN THE LARGEST TBB.

B. THIS CONDUCTOR SHALL BE CONTINUOUS AND AS SHORT AS POSSIBLE IN A STRAIGHT-LINE PATH. SIZE TBB BY TPTIA-607-D-1 TABLE 1.

C. UTILIZE EXOTHERMIC WELDING OR LISTED TWO-HOLE COMPRESSION LUGS FOR CONNECTIONS TO THE PBB/SBB.

D. PBB OR SBB, SEE GENERAL NOTES ABOVE FOR REQUIREMENTS.

E. BUILDING STEEL (STRUCTURAL METAL) VERIFIED ELECTRONICALLY CONTINUOUS VIA TWO-POINT TEST OR EQUIPMENT.

F. LISTED BONDING CONNECTOR. LISTED EXOTHERMIC, COMPRESSION, OR MECHANICAL CONNECTION.

G. SIZE THIS BONDING CONDUCTOR TO TIA 607-D-1, TABLE 1, THIS CONDUCTOR SHALLBE NO SMALLER THAN ANY OTHER CONDUCTOR IN THE TELECOM BONDING BACKBONE SYSTEM. USE #2/0 AWG, UNLESS OTHERWISE NOTED.

H. MINIMUM GROUND ELECTRODE SHALL BE 3/4-INCH DIAMETER BY 8'-0" LONG WITH A 1/2-INCH COPPER PLATING THICKNESS, BURIED 24-INCHES FOR A SUM OF 10'-0" DRIVEN DEPTH.

I. SIZE TEBC TO LARGEST-SIZE GROUNDING CONDUCTOR. USE #2/0 AWG, UNLESS OTHERWISE NOTED.

J. USE IRREVERSIBLE COMPRESSION CONNECTORS TO BOND TEBC TO RBC'S OR OTHER GROUNDING CONDUCTORS.

K. USE #6 AWG AS A MINIMUM RBC SIZE, UNLESS OTHERWISE NOTED.

L. WHEN USING RBBS, SEE GENERAL NOTES ABOVE FOR REQUIREMENTS.

M. BOND EQUIPMENT TO TEBC VIA IRREVERSIBLE COMPRESSION CONNECTORS AND #6 AWG.

N. BOND GROUND CABLE TO GROUND ELECTRODE.

O. STAND-OFF BRACKET SHALL MAINTAIN SEPARATION (MINIMUM 2-INCHES) FROM OTHER CABLE SPACE BRACKETS NO GREATER THAN 36-INCHES CENTER TO CENTER.

REUSE OF DOCUMENTS: THIS DOCUMENT AND THE IDEAS AND DESIGNS INCORPORATED HEREIN, AS AN INSTRUMENT OF PROFESSIONAL SERVICE, IS THE PROPERTY OF JACOBS; AND IS NOT TO BE USED, IN WHOLE OR IN PART, FOR ANY OTHER PROJECT WITHOUT THE WRITTEN AUTHORIZATION OF JACOBS. © JACOBS 2022. ALL RIGHTS RESERVED.

BID PACKAGE - NOT FOR CINSTRUCTION

REV.	DATE	DESCRIPTION	BY
0	03/06/2026	ISSUED FOR BID	JH

STATE OF LOUISIANA
M. YORK BROGDEN
License No. 41618
PROFESSIONAL ENGINEER
IN RESPONSIBLE CHARGE

SEWERAGE AND WATER BOARD OF NEW ORLEANS

CONTRACT No. 1444

WEST POWER COMPLEX @ CWTP
FUEL OIL DELIVERY SYSTEM

I&C

GROUNDING AND BONDING DETAIL

Jacobs

JOB NO.	D3393001
DWG NO.	IC711_D3393001
DESIGNED BY:	J HANDWORK
FILE NAME:	IC711_D3393001_1444.dgn

DR.	J JARVIS
CK:	J HANDWORK
AP:	S REISER
LAST EDIT:	
SCALE:	AS SHOWN
DATE:	03/06/2026

A/E DWG NO.
IC711

DWG. No. 12196-W-24

SET NO:

SHEET NO: 68 OF 72

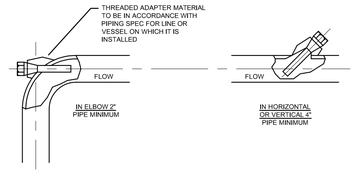

NOTES:

A. FOR INSTALLATION IN PIPE SIZES BELOW MINIMUM SHOWN, INCREASE PIPE TO MINIMUM LOCALLY OR INSTALL IN ELBOW OR TEE.
B. SADDLE TYPE WELDING FITTINGS ON VESSELS SHALL MEET PIPE OR VESSEL SPECIFICATIONS.
C. PLUG TO BE INSERTED IN ADAPTER TO PREVENT DISTORTION WHEN WELDING.
D. CHECK THERMOWELL LENGTH BEFORE LOCATING.
E. FOR PIPE SMALLER THAN 2" ADD REDUCERS TO KEEP 2" PIPE IN ELBOW CONNECTION.

THERMOWELL INSERTION LENGTH			
INSTALLATION	PIPE SIZE	U DIMENSION	NOTES
IN ELBOW	2" & SMALLER	4 1/2"	SWAG UP TO 2"
	3"-6"	7 1/2"	
	>6"	10 1/2"	
PERPENDICULAR INTO PIPE	<6"	-	INSTALL IN ELBOW
	6"	4 1/2"	PREFERRED INSTALLATION IS IN ELBOW DUE TO VELOCITY CONSIDERATIONS
	8"	4 1/2"	
	10"-12"	7 1/2"	
	>12"	10 1/2"	

THERMOWELL

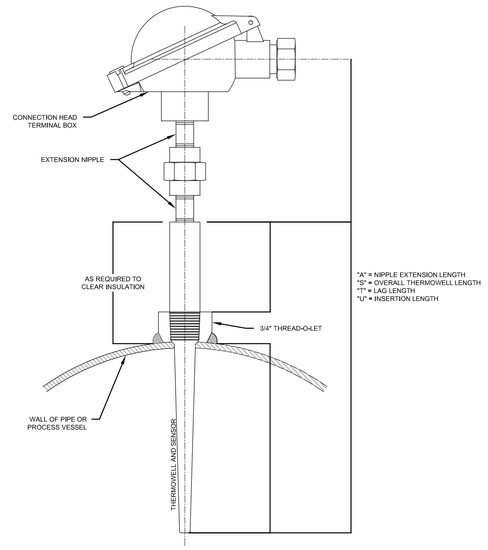

NOTES:

1. 'U' DIMENSION PER THERMOWELL INSERTION LENGTH TABLE IN IC502, DETAIL 1.
2. 'T' DIMENSION TO BE CALCULATED PER INSULATION LAG NEEDED TO EXTEND THE WELL BEYOND THE PIPE INSULATION.

RESISTANCE TEMPERATURE DETECTOR

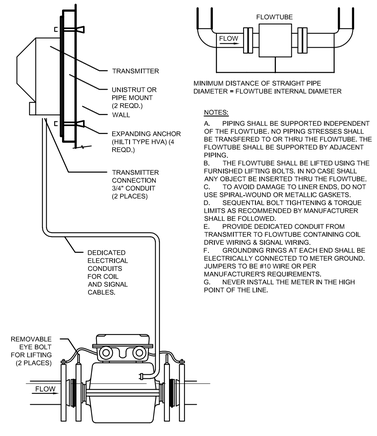

MINIMUM DISTANCE OF STRAIGHT PIPE DIAMETER = FLOWTUBE INTERNAL DIAMETER

NOTES:

A. PIPING SHALL BE SUPPORTED INDEPENDENT OF THE FLOWTUBE. NO PIPING STRESSES SHALL BE TRANSFERED TO OR THRU THE FLOWTUBE. THE FLOWTUBE SHALL BE SUPPORTED BY ADJACENT PIPING.
B. THE FLOWTUBE SHALL BE LIFTED USING THE FURNISHED LIFTING BOLTS. IN NO CASE SHALL ANY OBJECT BE INSERTED THRU THE FLOWTUBE.
C. TO AVOID DAMAGE TO LINER ENDS, DO NOT USE SPIRAL-WOUND OR METALLIC GASKETS.
D. SEQUENTIAL BOLT TIGHTENING & TORQUE LIMITS AS RECOMMENDED BY MANUFACTURER SHALL BE FOLLOWED.
E. PROVIDE DEDICATED CONDUIT FROM TRANSMITTER TO FLOWTUBE CONTAINING COIL DRIVE WIRING & SIGNAL WIRING.
F. GROUNDING RINGS AT EACH END SHALL BE ELECTRICALLY CONNECTED TO METER GROUND. JUMPERS TO BE #10 WIRE OR PER MANUFACTURER'S REQUIREMENTS.
G. NEVER INSTALL THE METER IN THE HIGH POINT OF THE LINE.

KEYED NOTES:

1. IF FLOWTUBE IS TO BE INSTALLED IN VERTICAL LINE, FLUID SHALL FLOW UP INTO TUBE TO MAINTAIN A FLOODED STATE.

FLOW METER - ELECTROMAGNETIC

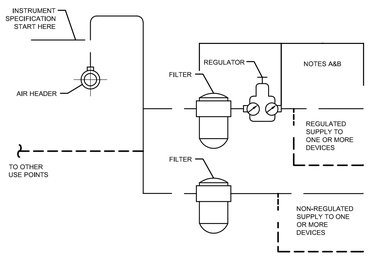

NOTES:

A. ALL TUBING SHALL BE 3/8" O.D, S,S, OR AS OTHERWISE SPECIFIED.
B. TUBING FOR PISTON ACTUATED VALVES SHALL BE 1/2" O.D, S,S.
C. ALL TUBE FITTINGS SHALL BE 316 SS UNLESS OTHERWISE SPECIFIED.

MAXIMUM NUMBER OF TAKE-OFFS FOR INSTRUMENT SUPPLY					
DEVICE TYPE		PIPE SIZE			
		1/2"	3/4"	1"	
TRANSMITTERS TRANSDUCERS LOCAL CONTROLLERS		6	12	24	
CONTROL VALVE OPERATORS	DIAPHRAGM	4	8	16	
	PISTON	3	6	12	
CONTROL DEVICES		3	6	12	

INSTRUMENT AIR SUPPLY INSTALLATION GUIDE

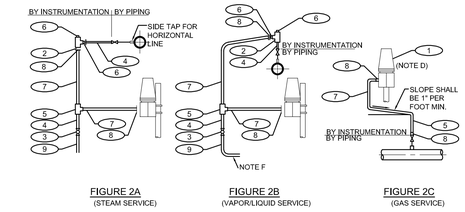

FIGURE 2A (STEAM SERVICE)
FIGURE 2B (VAPOR/LIQUID SERVICE)
FIGURE 2C (GAS SERVICE)

LIST OF MATERIALS				
ITEM	FIG 2A QTY	FIG 2B QTY	FIG 2C QTY	DESCRIPTION
1	1	1	1	PRESSURE TRANSMITTER
2	1	1	-	1/2" FEMALE CROSS
3	1	1	-	1/2" NPT BALL VALVE
4	2	2	-	1/2" SHORT NIPPLE
5	1	1	-	FEMALE RUN TEE 1/2" NPT x 1/2" TUBE
6	2	2	-	1/2" PLUG
7	A/R	A/R	A/R	TUBING 1/2" O.D
8	2	2	2	MALE CONNECTOR, 1/2" NPT x 1/2" TUBE
9	A/R	A/R	-	1/2" PIPE

NOTES:

A. HORIZONTAL TUBING FROM TAP TO TRANSMITTER SHALL HAVE CONTINUOUS OF SLOPE NO LESS THAN 1" PER FT. TOWARD TRANSMITTER. DO NOT POCKET TUBING RUN.
B. ROUTE BLOWDOWN LINES TO WITHIN 6" OF FLOOR AND ANCHOR SECURELY NEAR END OF TUBING/PIPING.
C. USE 316 SS MATERIALS UNLESS OTHERWISE NOTED. THEN MATERIAL SHALL CONFORM TO THOSE SPECIFIED IN THE APPROPRIATE AND PIPING CLASSIFICATION STANDARDS.
D. MOUNT TRANSMITTER IN ACCESSIBLE LOCATION. FREE FROM VIBRATION, MOISTURE AND HIGH TEMPERATURE.
E. THE IMPULSE LINE SHALL BE FULL OF CONDENSATE, THEREFORE THE DIFFERENCE IN ELEVATION MAY ALTER THE CALIBRATION. (SUPPRESSED/ELEVATE ZERO). THEREFORE MINIMAZE THE DIFFERENCE BETWEEN THE TRANSMITTER AND THE PROCESS TAP.
F. BEND BLOWDOWN PIPING BACKWARDS OPPOSITE THE HANDLE OF MANUAL VALVE.

PRESSURE TRANSMITTER

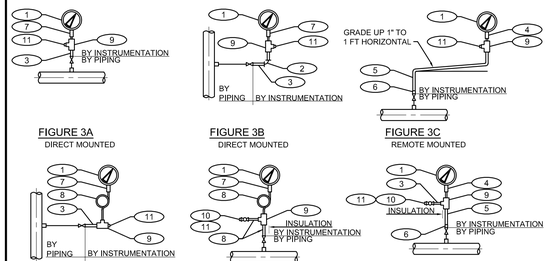

FIGURE 3A DIRECT MOUNTED
FIGURE 3B DIRECT MOUNTED
FIGURE 3C REMOTE MOUNTED
FIGURE 3D DIRECT MOUNTED
FIGURE 3E DIRECT MOUNTED STEAM SERVICE
FIGURE 3F REMOTE MOUNTED STEAM SERVICE

LIST OF MATERIALS		
ITEM	QTY	DESCRIPTION
1	1	PRESSURE GAUGE
2	A/R	1/2" FEMALE ELBOW
3	A/R	1/2" SHORT NIPPLE
4	A/R	1/2" TUBE x 1/4" OR 1/2" NPT CONNECTION
5	A/R	TUBING 1/2" O.D
6	A/R	MALE, CONNECTOR 1/2" NPT x 1/2" TUBE
7	A/R	1/2" COUPLING OR 1/2" NPT x 1/4" NPT REDUCER
8	A/R	PIGTAIL OR SIPHON
9	A/R	1/2" FEMALE TEE
10	A/R	1/2" BALL VALVE
11	A/R	1/2" PIPE PLUG

NOTES:

A. PIPE, FITTINGS & TUBING SHALL CONFORM WITH MECHANICAL STANDARDS FOR SERVICE CONDITIONS SPECIFIED.
B. CONNECTING TUBING SHALL BE SUPPORTED ON BRACKETS OR HANGERS RIGIDLY FASTENED TO WALLS OR STRUCTURAL MEMBERS.
C. USE 316 SS MATERIALS UNLESS OTHERWISE NOTED. THEN MATERIAL SHALL CONFORM TO THOSE SPECIFIED IN THE APPROPRIATE AND PIPING CLASSIFICATION STANDARDS.
D. INSULATION & MATERIAL SHALL MEET THE REQUIREMENTS OF THE SPECIFICATION SECTION PIPING INSULATION TYPES H OR C.

PRESSURE GAUGE

REV.	DATE	DESCRIPTION	BY
0	03/06/2026	ISSUED FOR BID	JH

STATE OF LOUISIANA
M. YORK BROGDEN
License No. 41618
PROFESSIONAL ENGINEER
Not Valid Without Digital Signature
2024.07.31 11:43:43 -05'00'

SEWERAGE AND WATER BOARD OF NEW ORLEANS

CONTRACT No. 1444

WEST POWER COMPLEX @ CWTP
FUEL OIL DELIVERY SYSTEM

I&C

STANDARD DETAILS

Jacobs

JOB NO.	D3393001
DWG NO.	IC712_D3393001
DESIGNED BY:	J HANDWORK
FILE NAME:	IC712_D3393001_1444.dgn

DR.	J JARVIS
CK:	J HANDWORK
AP:	S REISER
LAST EDIT:	02/23/2024
SCALE:	AS SHOWN
DATE:	03/06/2026

A/E DWG NO. IC712

DWG. No. 12196-W-24

SET NO: SHEET NO: 69 OF 72

© JACOBS 2022. ALL RIGHTS RESERVED.
REUSE OF DOCUMENTS: THIS DOCUMENT, AND THE IDEAS AND DESIGNS INCORPORATED HEREIN, AS AN INSTRUMENT OF PROFESSIONAL SERVICE IS THE PROPERTY OF JACOBS AND IS NOT TO BE USED, IN WHOLE OR IN PART, FOR ANY OTHER PROJECT WITHOUT THE WRITTEN AUTHORIZATION OF JACOBS.

BID PACKAGE - NOT FOR CINSTRUCTION

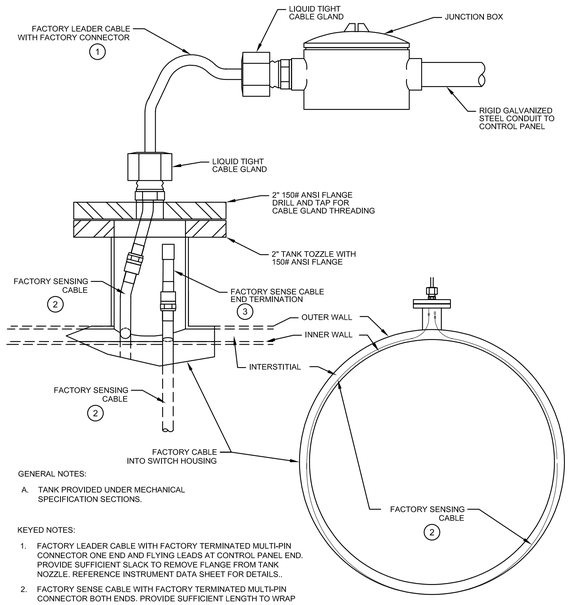

GENERAL NOTES:

A. TANK PROVIDED UNDER MECHANICAL SPECIFICATION SECTIONS.

KEYED NOTES:

1. FACTORY LEADER CABLE WITH FACTORY TERMINATED MULTI-PIN CONNECTOR ONE END AND FLYING LEADS AT CONTROL PANEL END. PROVIDE SUFFICIENT SLACK TO REMOVE FLANGE FROM TANK NOZZLE. REFERENCE INSTRUMENT DATA SHEET FOR DETAILS.
2. FACTORY SENSE CABLE WITH FACTORY TERMINATED MULTI-PIN CONNECTOR BOTH ENDS. PROVIDE SUFFICIENT LENGTH TO WRAP AROUND THE INNER TANK WALL CIRCUMFERENCE WITH SLACK TO LAY FREELY ON THE BOTTOM OF THE TANK INTERSTITIAL. COIL EXTRA SENSE CABLE LENGTH INSIDE TANK NOZZLE AND PREVENT SENSE CABLE FROM SLIDING TO TANK BOTTOM INTERSTITIAL. REFERENCE INSTRUMENT DATA SHEET FOR DETAILS.
3. FACTORY SENSE CABLE END TERMINATION WITH FACTORY TERMINATED MULTI-PIN CONNECTOR ONE END. COIL EXTRA LENGTH OF CABLE INSIDE TANK NOZZLE AND PREVENT SENSE CABLE FROM SLIDING TO TANK BOTTOM INTERSTITIAL.

DOUBLE WALLED TANK INTERSTITIAL LEAK DETECTION TABLE

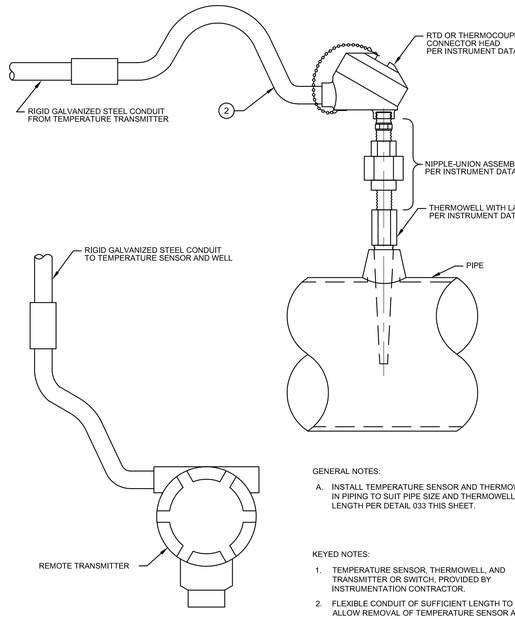

GENERAL NOTES:

A. INSTALL TEMPERATURE SENSOR AND THERMOWELL IN PIPING TO SUIT PIPE SIZE AND THERMOWELL LENGTH PER DETAIL 033 THIS SHEET.

KEYED NOTES:

1. TEMPERATURE SENSOR, THERMOWELL, AND TRANSMITTER OR SWITCH, PROVIDED BY INSTRUMENTATION CONTRACTOR.
2. FLEXIBLE CONDUIT OF SUFFICIENT LENGTH TO ALLOW REMOVAL OF TEMPERATURE SENSOR AND HEAD FROM THERMOWELL WITHOUT DISCONNECTING WIRING FOR MAINTENANCE ACTIVITIES.

REMOTE TEMPERATURE TRANSMITTER OR SWITCH MOUNTED IN PIPE

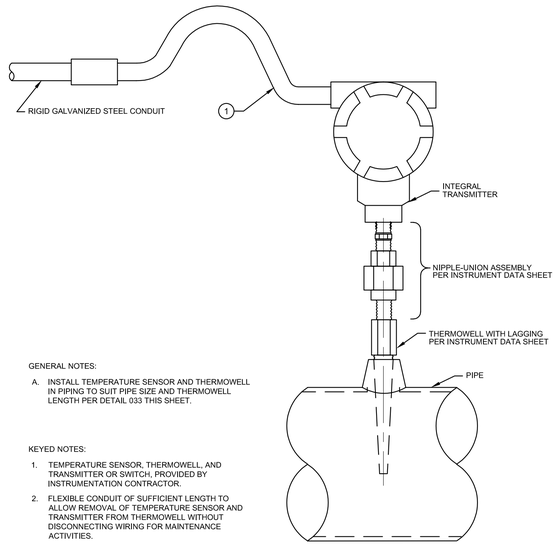

GENERAL NOTES:

A. INSTALL TEMPERATURE SENSOR AND THERMOWELL IN PIPING TO SUIT PIPE SIZE AND THERMOWELL LENGTH PER DETAIL 033 THIS SHEET.

KEYED NOTES:

1. TEMPERATURE SENSOR, THERMOWELL, AND TRANSMITTER OR SWITCH, PROVIDED BY INSTRUMENTATION CONTRACTOR.
2. FLEXIBLE CONDUIT OF SUFFICIENT LENGTH TO ALLOW REMOVAL OF TEMPERATURE SENSOR AND TRANSMITTER FROM THERMOWELL WITHOUT DISCONNECTING WIRING FOR MAINTENANCE ACTIVITIES.

INTEGRAL TEMPERATURE TRANSMITTER OR SWITCH MOUNTED IN PIPE

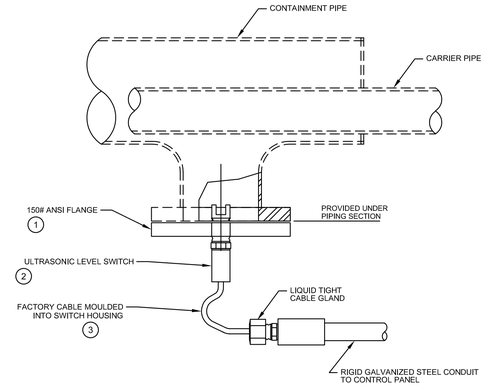

KEYED NOTES:

1. CONTRACTOR SHALL VERIFY PIPING FLANGE SIZE PRIOR TO INSTRUMENT MOUNTING FLANGE. PROCUREMENT AND INSTALLATION. FLANGE TO BE DRILLED AND TAPPED TO CONFORM WITH INSTRUMENT CONNECTION.
2. REFERENCE INSTRUMENT DATA SHEET FOR INSTRUMENT DETAILS.
3. INSTRUMENT FLYING LEADS OF SUFFICIENT LENGTH SHALL ALLOW REMOVAL OF LEVEL SENSOR FROM MOUNTING FLANGE WITHOUT DISCONNECTING WIRING FOR MAINTENANCE ACTIVITIES.

PIPE CONTAINMENT LEAK SWITCH

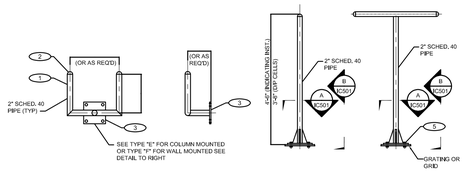

FIGURE 1A
WALL OR COLUMN MOUNTED PIPE STAND FOR TWO INSTRUMENTS (CONFIRM DIMENSIONS PRIOR TO FABRICATION)

FIGURE 1B
ONE INSTRUMENT FLOOR MOUNTED PIPE STANDS ON GRATING

FIGURE 1C
TWO INSTRUMENTS FLOOR MOUNTED PIPE STANDS ON GRATING

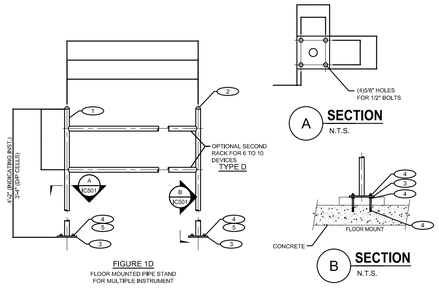

FIGURE 1D
FLOOR MOUNTED PIPE STAND FOR MULTIPLE INSTRUMENT

LIST OF MATERIALS		
ITEM	QTY	DESCRIPTION
1	A/R	PIPE, 2" NOM, x SCH 40, ASTM A53 C.S.
2	A/R	WELD CAP, 2" NOM, x SCH 40, ASTM A234, C.S.
3	1	10"x10"x3/8" BASE PLATE, ASTM A36, C.S.
4	A/R	PHILLIPS S-12 ANCHORS OR EQ, W/ 1/2" BOLTS (4), NUTS & WASHERS
5	A/R	1/2" BOLTS, NUTS AND WASHERS, LENGTH TO SUIT

NOTES:

A. PRIOR TO STAND MOUNTING, PAINT OR GALVANIZE TO AREA BUILDING SPECIFICATIONS. IF GALVANIZED, GALVANIZE AFTER FABRICATION. NO FIELD PAINTING OVER WELDS OR CUT ENDS.

B. USE WALL OR COLUMN MOUNTED TYPE OF SUPPORT IN PREFERENCE TO FLOOR MOUNTED TYPES WHERE PRACTICAL.

C. DO NOT USE EXPANSION BOLTS, USE ALL-THREAD WITH EPOXY ADHESIVE IN EXTERIOR LOCATIONS. USE GALVANIZED ALL-THREAD, NUTS, AND WASHERS.

PIPE STANDS

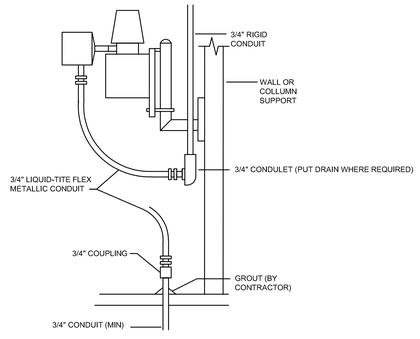

CONDUIT TERMINATION AT INSTRUMENT

© JACOBS 2022. ALL RIGHTS RESERVED.
REUSE OF DOCUMENTS: THIS DOCUMENT, AND THE IDEAS AND DESIGNS INCORPORATED HEREIN, AS AN INSTRUMENT OF PROFESSIONAL SERVICE, IS THE PROPERTY OF JACOBS AND IS NOT TO BE USED, IN WHOLE OR IN PART, FOR ANY OTHER PROJECT WITHOUT THE WRITTEN AUTHORIZATION OF JACOBS.

BID PACKAGE - NOT FOR CINSTRUCTION

REV.	DATE	DESCRIPTION	BY
0	03/06/2026	ISSUED FOR BID	JH

STATE OF LOUISIANA
M. YORK BROGDEN
License No. 41618
PROFESSIONAL ENGINEER
My [illegible]
2026-03-06 13:39:20 -05'00'

SEWERAGE AND WATER BOARD OF NEW ORLEANS

CONTRACT No. 1444

WEST POWER COMPLEX @ CWTP
FUEL OIL DELIVERY SYSTEM

I&C

STANDARD DETAILS

Jacobs

JOB NO.	D3393001
DWG NO.	IC713_D3393001
DESIGNED BY:	J HANDWORK
FILE NAME:	IC713_D3393001_1444.dgn

DR.	J JARVIS
CK:	J HANDWORK
AP:	S REISER
LAST EDIT:	
SCALE:	AS SHOWN
DATE:	03/06/2026

A/E DWG NO. IC713

DWG. No. 12196-W-24

SET NO:

SHEET NO: 70 OF 72

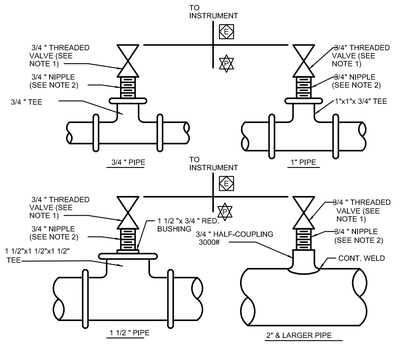

NOTES
1. VALVE TYPE SHALL BE BALL VALVE OR PLUG VALVE PER PIPING SPECIFICATIONS.
2. VALVE AND NIPPLE MATERIAL SHALL BE PER PIPING SPECIFICATIONS.
3. UTILIZED WITH FLUIDS LESS THAN 50 CP VISCOSITY. NOTE THAT FOR FLUIDS OVER 10 CP VISCOSITY OR WITH A Ph LESS THAN 4.5 OR GREATER THAN 9.0, A DIAPHRAGM SEAL WILL BE UTILIZED. SEE DETAIL ID-103H.
4. REFER TO ID-000 FOR INSTALLATION SYMBOLS.
5. FOR NATURAL GAS INSTALLATIONS, PIPING SHALL BE FULLY WELDED, THREADS ARE NOT ALLOWED. REFERENCE PIPING SPECIFICATIONS.

PRESSURE MEASUREMENT PROCESS CONNECTION (STRT. PIPE W/ISO. VALVE)

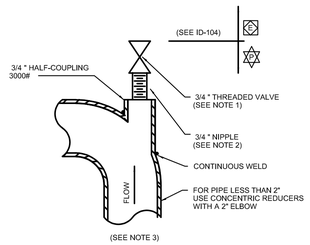

NOTES
1. VALVE TYPE SHALL BE BALL VALVE OR PLUG VALVE PER PIPING SPECIFICATION.
2. VALVE AND NIPPLE MATERIAL SHALL BE PER PIPING SPECIFICATIONS.
3. THIS TYPE OF PRESSURE CONNECTION WILL NOT BE UTILIZED WITH FLUIDS HAVING SPECIFIC GRAVITY GREATER THAN 1.2 OR VISCOSITY GREATER THAN 10CP.
4. REFER TO ID-000 FOR INSTALLATION SYMBOLS.
5. FOR NATURAL GAS INSTALLATIONS, PIPING SHALL BE FULLY WELDED, THREADS ARE NOT ALLOWED. REFERENCE PIPING SPECIFICATIONS.

PRESSURE MEASUREMENT PROCESS CONNECTION (PIPE ELBOW W/ISO. VALVE)

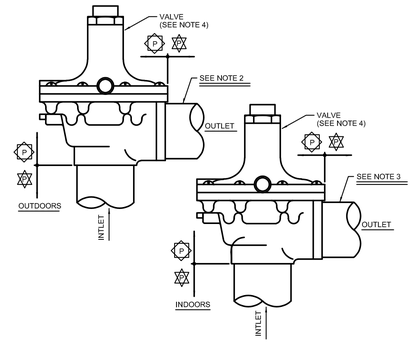

NOTES
1. REFER TO ID-000 FOR INSTALLATION SYMBOLS.
2. OUTDOOR APPLICATIONS REQUIRE U-NECK IN PIPING TURNED DOWN WITH ELEVATION OF MIN. 20 FT. ABOVE GRADE AND A BIRD SCREEN COVERING END OF PIPE. IF ELEVATION IS LESS THAN 20 FT. OUTLET PIPE SHALL BE RUN TO NEAREST PROCESS DRAIN.
3. INDOOR APPLICATIONS REQUIRE U-NECK IN PIPING TURNED DOWN AND PIPE RUN TO NEAREST PROCESS DRAIN.
4. VALVE MOUNTED WITH INLET DOWN & OUTLET HORIZONTAL.

SAFETY RELIEF VALVE

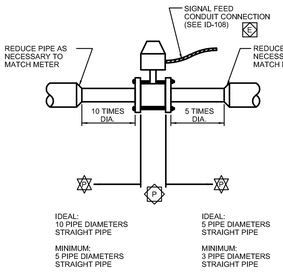

NOTES
1. REFER TO ID-000 FOR INSTALLATION SYMBOLS.
2. LOCAL MOUNT TRANSMITTER.

FLOW METER - VORTEX

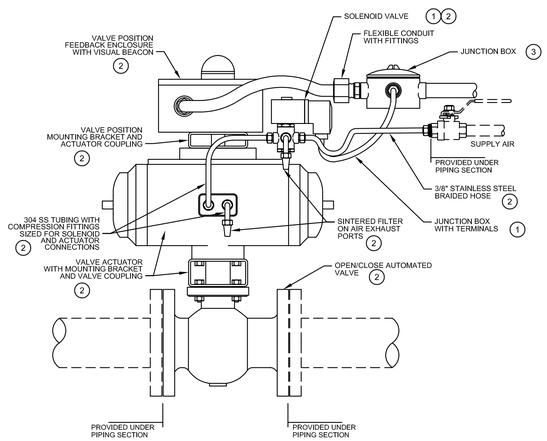

GENERAL NOTES:

A. MAINTAIN SUFFICIENT SLACK ON ALL FLEXIBLE CONDUIT, HOSE, AND CORD SETS TO ELIMINATE STRESS ON VALVE ASSEMBLY CONNECTION POINTS.

KEYED NOTES:

1. SOLENOID AND SURGE SUPPRESSION WITH CORD SET PER INSTRUMENT DATA SHEET. REFERENCE DETAIL 041 THIS SHEET.
2. PROVIDED WITH OPEN/CLOSE VALVE ASSEMBLY, REFERENCE DATA SHEET FOR REQUIRED COMPONENTS.
3. JUNCTION BOX WITH TERMINALS REFERENCE DETAIL 041 THIS SHEET.

OPEN/CLOSE AUTOMATED VALVE ASSEMBLY

REV.	DATE	DESCRIPTION	BY
0	03/06/2026	ISSUED FOR BID	JH

STATE OF LOUISIANA
M. YORK BROGDEN
License No. 41618
PROFESSIONAL ENGINEER

SEWERAGE AND WATER BOARD OF NEW ORLEANS

CONTRACT No. 1444

WEST POWER COMPLEX @ CWTP
FUEL OIL DELIVERY SYSTEM

I&C

STANDARD DETAILS

Jacobs

JOB NO.	D3393001
DWG NO.	IC714_D3393001
DESIGNED BY:	J HANDWORK
FILE NAME:	IC714_D3393001_1444.dgn

DR.	J JARVIS
CK:	J HANDWORK
AP:	S REISER
LAST EDIT:	
SCALE:	AS SHOWN
DATE:	03/06/2026

A/E DWG NO. IC714

DWG. No. 12194-W-24

SET NO: SHEET NO: 71 OF 72

BID PACKAGE - NOT FOR CINSTRUCTION

REUSE OF DOCUMENTS: THIS DOCUMENT, AND THE IDEAS AND DESIGNS INCORPORATED HEREIN, AS AN INSTRUMENT OF PROFESSIONAL SERVICE, IS THE PROPERTY OF JACOBS AND IS NOT TO BE USED, IN WHOLE OR IN PART, FOR ANY OTHER PROJECT WITHOUT THE WRITTEN AUTHORIZATION OF JACOBS. © JACOBS 2022. ALL RIGHTS RESERVED.

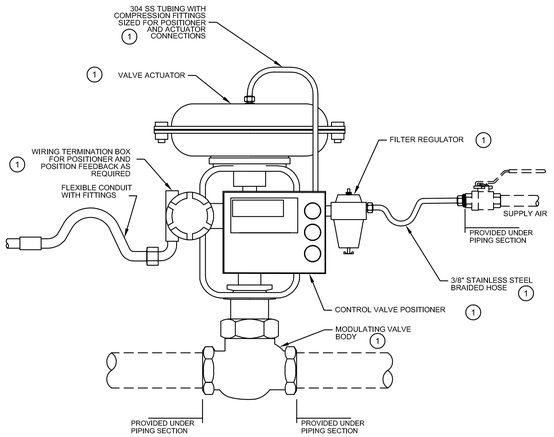

GENERAL NOTES:

A. MAINTAIN SUFFICIENT SLACK ON ALL FLEXIBLE CONDUIT AND HOSE TO ELIMINATE STRESS ON VALVE ASSEMBLY CONNECTION POINTS.

KEYED NOTES:

1. PROVIDED WITH MODULATING CONTROL VALVE ASSEMBLY, REFERENCE DATA SHEET FOR REQUIRED COMPONENTS.

CONTROL VALVE ASSEMBLY

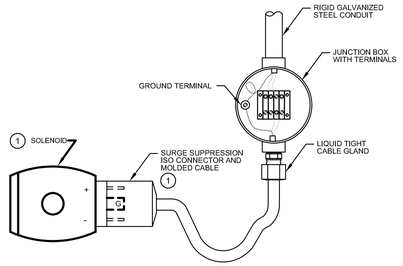

GENERAL NOTES:

A. MAINTAIN SUFFICIENT SLACK IN CORD SET TO ELIMINATE STRESS ON CONNECTOR TO SOLENOID VALVE DIN CONNECTION.

KEYED NOTES:

1. SOLENOID AND SURGE SUPPRESSION CORD SET PER INSTRUMENT DATA SHEET.

SOLENOID VALVE CONNECTIONS

LIST OF MATERIALS		
ITEM	QTY	DESCRIPTION
1	4	1/2" ODT x 3/4" NPT MALE CONNECTOR
2	A/R	1/2" OD x .035" WALL, A213, GRADE TP316
3	2	1/2" UNION TEE, 316 SS
4	4	1/2" VALVE, 316 SS
5	1	1/2" FNPT 3-VALVE MANIFOLD, 316 SS (Supplied with Inst.)
6	2	1/2" OD TUBING CAP, 316 SS
7	2	1/2" ODT x 1/2" NPT MALE CONNECTOR

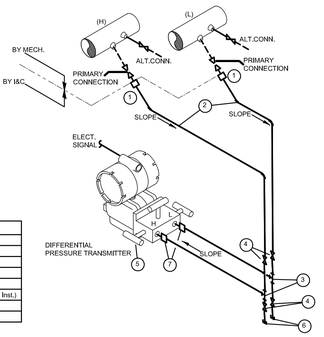

DIFFERENTIAL PRESSURE TRANSMITTER

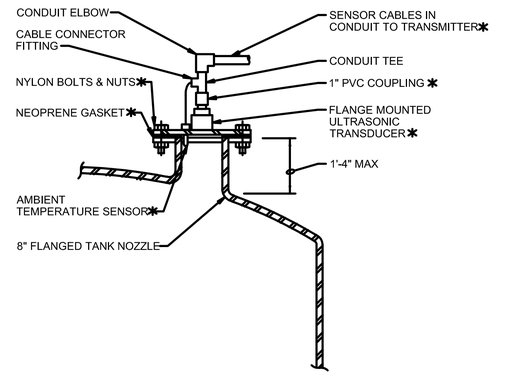

ULTRASONIC LEVEL TRANSMITTER

© JACOBS 2022. ALL RIGHTS RESERVED.
REUSE OF DOCUMENTS: THIS DOCUMENT, AND THE IDEAS AND DESIGNS INCORPORATED HEREIN, AS AN INSTRUMENT OF PROFESSIONAL SERVICE, IS THE PROPERTY OF JACOBS AND IS NOT TO BE USED, IN WHOLE OR IN PART, FOR ANY OTHER PROJECT WITHOUT THE WRITTEN AUTHORIZATION OF JACOBS.

BID PACKAGE - NOT FOR CINSTRUCTION

REV.	DATE	DESCRIPTION	BY
0	03/06/2026	ISSUED FOR BID	JH

STATE OF LOUISIANA
M. YORK BROGDEN
License No. 41618
PROFESSIONAL ENGINEER
2026.03.06 11:09:00

SEWERAGE AND WATER BOARD OF NEW ORLEANS

CONTRACT No. 1444

WEST POWER COMPLEX @ CWTP
FUEL OIL DELIVERY SYSTEM

I&C

STANDARD DETAILS

Jacobs

JOB NO.	D3393001
DWG NO.	IC715_D3393001
DESIGNED BY:	J HANDWORK
FILE NAME:	IC715_D3393001_1444.dgn

DR.	J JARVIS
CK:	J HANDWORK
AP:	S REISER
LAST EDIT:	
SCALE:	AS SHOWN
DATE:	03/06/2026

A/E DWG NO. IC715

DWG. No. 12196-W-24

SET NO: SHEET NO: 72 OF 72

SEWERAGE and WATER BOARD

of

NEW ORLEANS

VOLUME 4

STANDARD AND REFERENCE DRAWINGS

OF THE

CONTRACT DOCUMENTS

FOR

CONTRACT 1444

WEST POWER COMPLEX @ CWTP

FUEL OIL DELIVERY SYSTEM

Issued for Bid

August 2026

INDEX OF CONTRACT DOCUMENTS
FOR
CONTRACT 1444
WEST POWER COMPLEX @ CWTP
FUEL OIL DELIVERY SYSTEM

VOLUME 4	NO. OF SHEETS	REFERENCE DRAWINGS
1757 P11	1	UNDERGROUND UTILITIES AT CARROLLTON PLANT
1757 P30	1	UNDERGROUND UTILITIES AT CARROLLTON PLANT
4173 P4	1	CONTRACT 1095 INSTALLATION OF HIGH VOLTAGE CABLE FOR BASINS L3 AND L4
8818-W24	1	PLAN OF WATER PURIFICATION PLAN SHEET NO.18
8826-W24	1	PLAN OF WATER PURIFICATION PLAN SHEET NO.26
8827-W24	1	PLAN OF WATER PURIFICATION PLAN SHEET NO.27
8828-W24	1	PLAN OF WATER PURIFICATION PLAN SHEET NO.28
8829-W24	1	PLAN OF WATER PURIFICATION PLAN SHEET NO.29
8830-W24	1	PLAN OF WATER PURIFICATION PLAN SHEET NO.30
100162	8	SUBSURFACE UTILIY ENGINEERING MAP (SJB GROUP PROJECT NO. 100162.00_
N/A	1	SJB SURVEY BASE DRAWING (NOT TO SCALE)
11685-W-58	7	CONTRACT 1172 CARROLLTON FILTER BACKWASH RECYCLE FACILITY
12098-W8	79	CONTRACT 1369 HMGP EMERGENCY FUEL STORAGE RETROFIT POWER PLANT MAIN WATER PURIFICATION PLANT POWER COMPLEX

SEE SHEET PG 4

RESERVOIR L4

MONOBLOCK AREA.

MUD VALVE

MUD VALVE

RESERVOIR L4

DRY PASSAGE

MIXING AREA.

WATER INTAKE PASSAGE

ELECTRICAL SWITCHGEAR BUILDING

DWG. 4173-P6-P1

E 1-2"

E 1-4"

E 1-4"

4-4" & 1-2" TO HAMILTON SUB. (2" FOR G3 LIGHTS)

2-4"

HANDHOLE

E

L-1 — C-5 PASSAGE
BOTTOM EL. 8.00 8'0" WIDE 13'0" HIGH

TO MUD DISCHARGE

FEEDERS M87 & C87 TO CHEMICAL HOUSE — IN CABLE TRAY

1-4", 2-3" CONDUIT ONLY, FOR FUTURE MUD PUMP CONVERSION TO 60HZ.

2-4"c. FUTURE MUD PUMP FEEDERS

M87 & C87 IN TRAY TO SUBSTATION "B".

SWITCH HOUSE

COAGULATING RESERVOIR NO. 5

COAGULATING RESERVOIR NO. 7

C-5 — C-7 PASSAGE
BOTTOM PASSAGE 24'-1" WIDE - 14'0" WIDE BOTTOM EL. 1.80
TOP PASSAGE 4'0" WIDE - 14'0" WIDE BOTTOM EL. 22.75

M87 & C87 IN CONCRETE CURB.

PLAN OF WATER PURIFICATION PLANT
SHEET No. 15

SEWERAGE AND WATER BOARD
NEW ORLEANS, LA.

DATE SEPT. 1, 1938
DRAWING No. 8815-W-24

REV.	DATE	DESCRIPTION	BY

SEWERAGE AND WATER BOARD OF NEW ORLEANS

UNDERGROUND UTILITIES
AT CARROLLTON PLANT

DR.
CK.
AP.
SCALE 1/16" = 1'-0"
DATE 4-1-74

GENERAL SUPERINTENDENT

DWG. No. 1757-P11

MH
TWIN 60" RAN WATER LINES
TO RIVER STATIONS
4" Ø SEWER LINE
WAREHOUSE NO. 2
1'-6"
6" U.P. GAS
8" SEWER
6" WATER
¾" Ø TYPE 'L' COPPER LINE
HAMILTON WAREHOUSE
12-5"C TO RIVER STATIONS
MATCH LINE

HAMILTON STREET
12-5" C. TO RIVER STATIONS
7'-6" CL DUCT TO FENCE
TO NOPSI POLE
¾" Ø TYPE 'L' COPPER LINE
NEGATIVE WIRE TO 60" PIPES
12-5" C
48" Ø
12-4" C
CONC. PAD
VENTURE MANHOLE
VALVE WITH HOLE
6-4" C. JEFFERSON RIVER STATION CONTROL
SEE SHEET 1757-P25
10'-0"
24" MUD LINE FROM RECYCLE BASIN
DUCT TO L3/24 SUB STATION - 4-4"C
TO L3/L4 SUBSTATION

METAL STORAGE BUILDING
HAMILTON SUB-STATION
WAREHOUSE SERVICE TRANSFORMER
CATHODIC PROTECTION DEEP GROUND BED
MANHOLE
MH
CONC. PAD

MATCH LINE
HAMILTON WAREHOUSE
WAREHOUSE NO. 1
ORLEANS - JEFFERSON PARISH LINE

BASIN G 3

REV.	DATE	DESCRIPTION	BY

SEWERAGE AND WATER BOARD OF NEW ORLEANS

UNDERGROUND UTILITIES AT CARROLLTON WATER PLANT

DR. J.A.N.	
TRC.	
CK.	GENERAL SUPERINTENDENT
AP.	
SCALE 1/16"=1'-0"	DWG. No. 1757-P30
DATE	SET NO. / SHEET NO.

BRUNING 40-22 74172

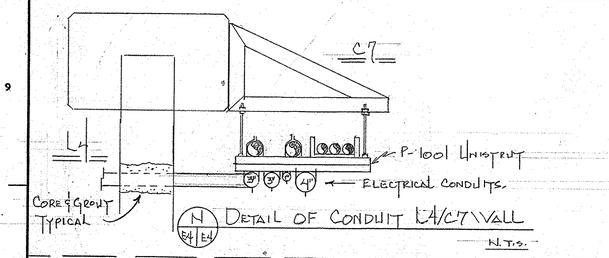

N E4 E4 Detail of Conduit L4/C7 Wall

N.T.S.

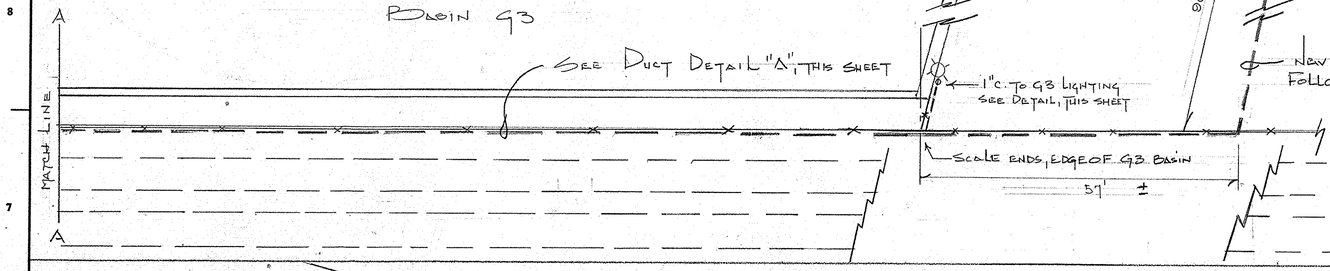

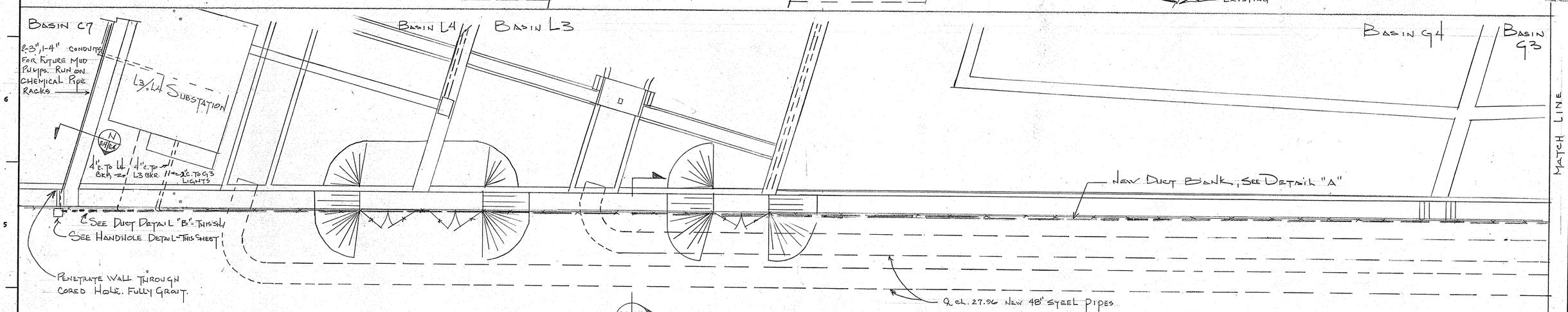

E4 E4 D High Voltage Duct Installation

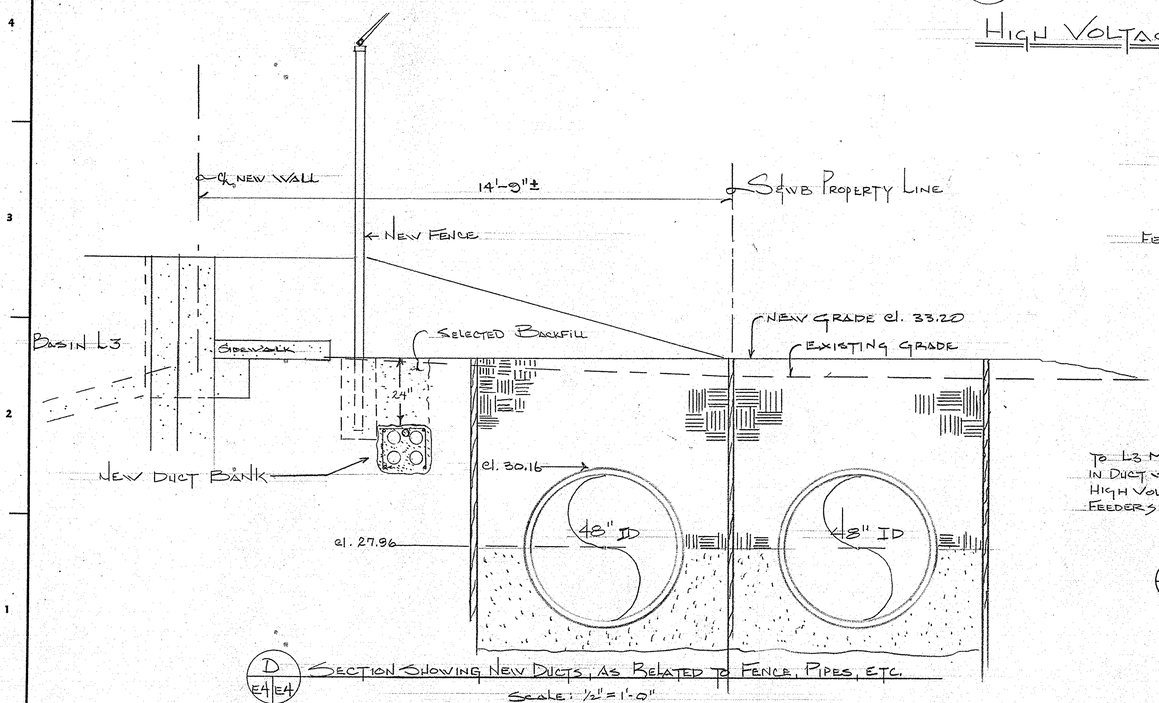

D E4 E4 Section Showing New Ducts, As Related To Fence, Pipes, Etc.

Scale: ½" = 1'-0"

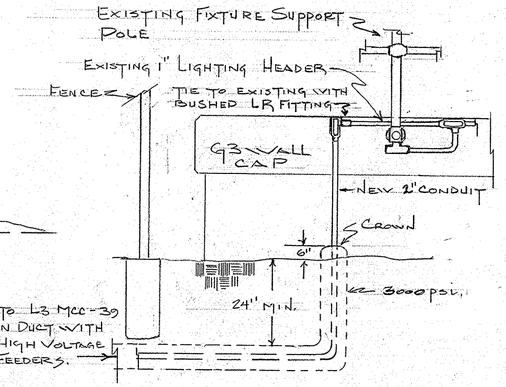

E E5 E4 Detail of G3 Basin Light Feed

N.T.S.

1"=10'-0"

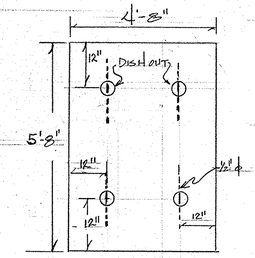

Top Layout N.T.S.

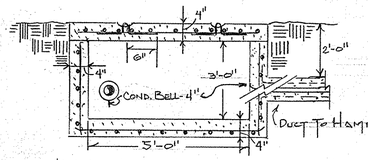

Notes:
1. All rebar ½"ϕ, 6" on centers, both ways.
2. All concrete - 3000 psi.
3. Tie duct rebar into handhole rods.
4. Provide maximum offset between ducts.

Handhole Crossection

N.T.S.

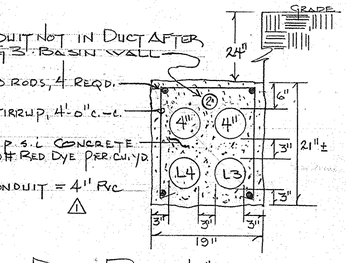

Duct Detail "A"

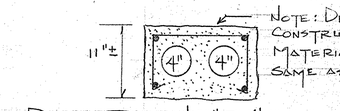

Note: Depth, construction, materials, etc. same as above.

Duct Detail "B"

E4

REV.	DATE	DESCRIPTION	BY
1	3-3-82	CHANGED CONDUIT SIZE	T.H.H.

SEWERAGE AND WATER BOARD OF NEW ORLEANS

CONTRACT 1095
INSTALLATION OF HIGH VOLTAGE CABLE FOR BASINS L3 & L4

DR. SARRAT	GENERAL SUPERINTENDENT
TRC.	
CK. SARRAT	
AP. SARRAT	DWG. No. 4173-P4
SCALE AS SHOWN	SET NO.
DATE 6-10-81	SHEET NO. 30 of 94

Diatogen N. O. 1984 "Agaproof"

COAGULATING RESERVOIR NO. 8

69'-1 1/4"

72'-0 1/2"

16'-1 1/4"

16'-9 3/8"

FENCE

S.&W.B. PROPERTY LINE

ORLEANS & JEFFERSON PARISH LINE

6"C.I. PIPE

6"x6"x6" TEE

TOP OF 6"C.I. PIPE EL. 25.88

112'-0"

3'-1.7"

TOP OF PIPE EL. 18.18

E.EL. 26.8

24" STL. PIPE

16'-0"

60" I.D. PIPE LINE

CATCH BASIN
INV. EL. 16.29

12"ϕ D.P. LINE

TANK NO 9

SCALE

10 5 0 10 20 30 40 50

1" = 12' 6"

PLAN OF WATER PURIFICATION PLANT
SHEET No. 18

SEWERAGE & WATER BOARD
NEW ORLEANS, LA.

REV. 3-12-92

DATE - JUNE 29, 1940
DRAWING No. B818-W-24
REV. 8-28-85

AF 12738

℄ TANK No 9 (NEW)

112'-7"

136'-0"

96'-0"

TANK No 8 (NEW)

℄ TANK No 10 (NEW)

FUTURE 50" I.D. PIPE LINE

24" STL PIPE

16'-0"

48" ϕ BUTTERFLY VALVE

CATCH BASIN INV. EL. 16.29

12" D.P. LINE

50" I.D. PIPE LINE

FENCE

15" ϕ CONC. DRAIN LINE (EXIST.)

CURB

FENCE

℄ EL. 16.4 △ 24" STL. PIPE

SO. CLAIBORNE AVE.

24" STL. PIPE

℄ EL. 13.8

24" STL. PIPE

℄ EL. 16.8

℄ EL. 15.3 ⚠

REV.	DATE	DESCRIPTION	BY
⚠	3-10-92	24" STL PIPE	T.N.

SEWERAGE AND WATER BOARD OF NEW ORLEANS

PLAN OF WATER PURIFICATION PLANT — SHEET No 2.6

DR. B.A.F.	
TRC.	
CK.	GENERAL SUPERINTENDENT
AP.	DWG. No. 8826-W-24
SCALE 1" = 12'-6	
DATE 8-23-85	SET NO. SHEET NO. 2.6 OF 2.6

A B C D E F G H J K L

SCALE
10 0 10 20 30 40 50
100 TO 1
1"=12'-6"

2-12" SLUDGE LINES

SLUDGE SUMP

SLUDGE SUMP

107'-0"

BASIN G-3

EDGE OF CONC. SLAB

10" WALL

TOE OF SLOPE

24" HOBAS CMPD SEWER PIPE

G-3 & G-4 WALL

BASIN G-4

SLUDGE SUMP

SLUDGE SUMP

EDGE OF CONC. SLAB

10" WALL

TOE OF SLOPE

14'-0"

2-12" SLUDGE LINES

33'-0"

SLOW MIXING CHANNEL

SLOW MIXING CHANNEL

G-4 & L-3 WALL

WALKWAY

Asphalt RAMP

DAPPLE WALL COLUMN

DAPPLE WALL

SUMP H

SUMP D

SUMP A

ACCESS OPENING TO DRY PASSAGE

LOW DRY PASSAGE

4 PUMPS A & D

LIME MIXING RESERVOIR No. 3

4'-0" SLAB

SLOPE

ROCK FILL BELOW

M

PLANT OF WATER PURIFICATION
FILTER AREA

ELEVATE AND WIDEN ROAD OVER NEW QUEENSTON RESERVOIR

DATE 5/15/50
DRAWING NO. 27-1124

DRAWING NO. 0-1908

1 PAGE 16

AF 12739

60" MORTAR COATED STEEL PIPE

OPERATING SLAB

H.O. S & W.B. ℄ AND FENCH LINE

2'-10"

2'-10"

26'-2"

30'-0"

12'-0"

240'-0"

VENTURI MANHOLE

32'-6"

℄ 24" STL. PIPE

109'-9½"

HOLLYGROVE STREET

NEW OPERATING SLAB

WALKWAY

℄ G-3 WALL

WALKWAY

℄ G-3 WALL

INFLUENT STRUCTURE

FLASH MIXING CHAMBERS

℄ GRIT COLLECTOR BED

PIER

PEDESTAL

℄ SLOW MIXING CHANNEL

CURB

PIER

PEDESTAL

℄ SLOW MIXING CHANNEL

PEDESTAL

PIER

℄ EXIST PASSAGE

WEIR TROUGHS

BAFFLE WALL

BASIN G-3

℄ 24" RECYCLE PIPE

10'-0"

℄ 8-12" SLUDGE LINES

SLUDGE SUMP

℄ 12" SLUDGE LINES

SLUDGE SUMP

REV.	DATE	DESCRIPTION	BY
1	3-19-92	NEW 24" STL. PIPE	T.N

SEWERAGE AND WATER BOARD OF NEW ORLEANS

PLAN OF WATER PURIFICATION PLANT

DR. B.S.S.	
TRC.	
CK.	GENERAL SUPERINTENDENT
AP.	
SCALE 1"=12'-0"	DWG. No. 8828 W-24
DATE 9/3/1986	SET NO. / SHEET NO.

BRUNING 40-22 56957

G BASIN 4

℄ SLOW MIXING CHANNEL

MACHINERY PAD

℄ SLOW MIXING CHANNEL

MACHINERY PAD

℄ G & L-3 WALL

BASIN 'L-3"

SUMP 'D'

SUMP 'A'

OPENING TO DRY PASSAGE

℄ OF DRY PASSAGE

℄ PUMP A & D

BASIN 'L-3"

BAFFLE WALLS

NEW GRATING

SUMP

SUMP

BASIN 'L-4'

SUMP 'G'

SUMP 'E'

℄ DRY PASSAGE

℄ PUMP 'C' & 'D'

BASIN 'L-4'

L-4 & C-5 PASSAGE

'C' BASIN No. 5

SWITCH HOUSE

'C' RESERVOIR No. 7

ASPHALT RAMP

24" STL PIPE ℄ EL. 26.0 ⚠

CONC. RAMP

4" CONC. SLAB

℄ INFLUENT PASSAGE

PASSAGE WALL & DOUBLE

CONC. RAMP

ELEC. MH.

SLOPE

4" CONC. SLAB

GRATING HALLWAY

GRATING HALLWAY

24'-0

℄ INFLUENT PASSAGE

CONC. RAMP

SLOPE

12'-0 WIDE GATE

4" CONC. SLAB

ELECTRICAL SWITCHGEAR BUILDING

SLOPE

REV.	DATE	DESCRIPTION	BY
⚠	5-23-92	NEW 24" STL PIPE	T.N.

SEWERAGE AND WATER BOARD OF NEW ORLEANS

PLAN OF MAIN PURIFICATION WATER PLANT

DR. B.S.S.	
TRC.	
CK.	GENERAL SUPERINTENDENT
AP.	DWG. No. 8829-W24
SCALE 1"=12'-0"	
DATE 9/8/86	SET NO. / SHEET NO.

AF 12739

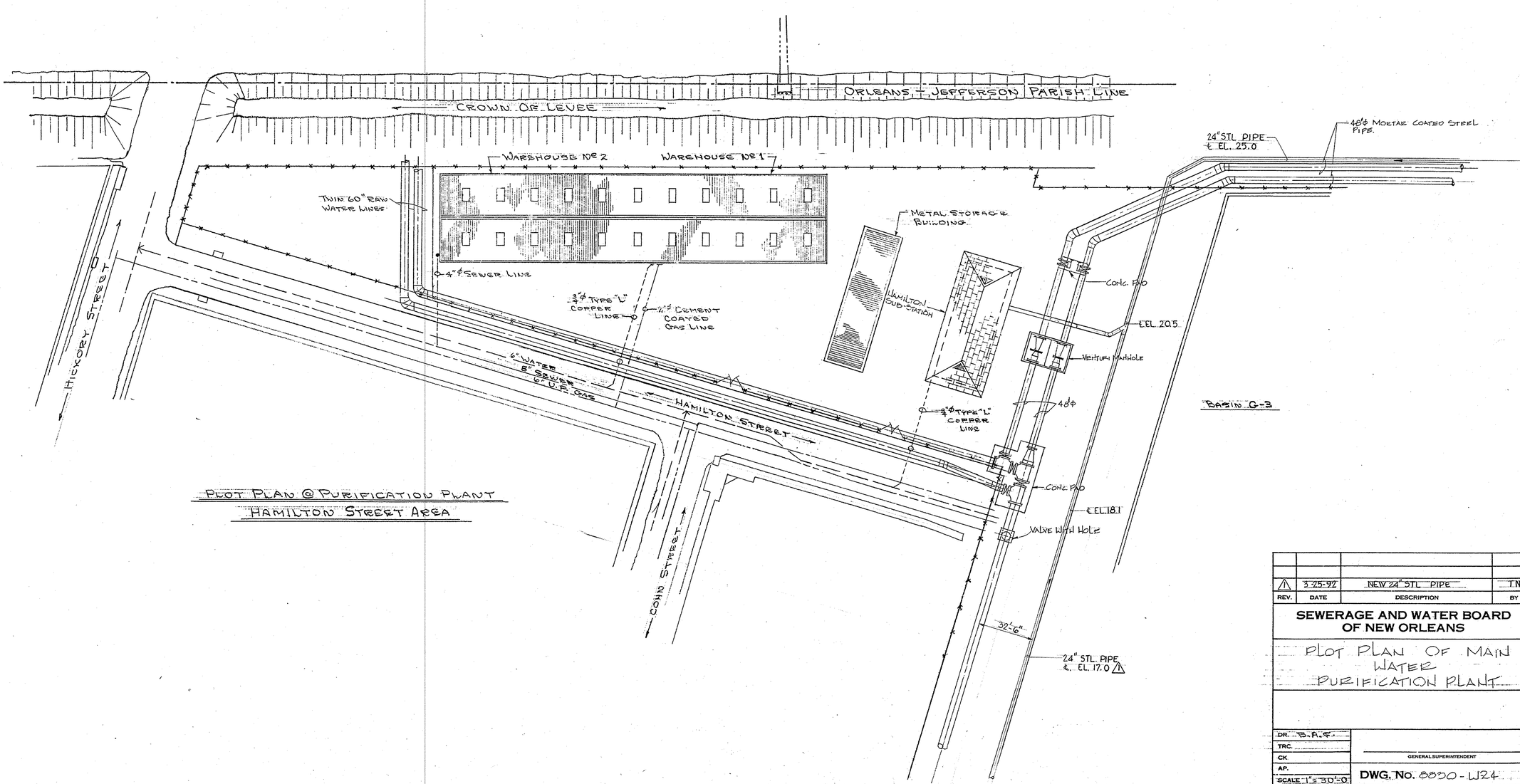

PLOT PLAN @ PURIFICATION PLANT
HAMILTON STREET AREA

REV.	DATE	DESCRIPTION	BY
⚠	3-25-92	NEW 24" STL PIPE	T.N.

SEWERAGE AND WATER BOARD OF NEW ORLEANS

PLOT PLAN OF MAIN WATER PURIFICATION PLANT

DR. B.A.F.	
TRC.	
CK.	GENERAL SUPERINTENDENT
AP.	
SCALE 1"= 30'-0"	DWG. NO. 8090 - W24
DATE 3-11-83	SET NO. / SHEET NO. 1

BK.NINS-40-22 56957

Final SUE Plan Set
J:\100162_00 Power Eng - SWBNO WPC Group 3 Projects\91 SUE Files\CAD\SUE Sheet Set_TITLE.dgn
2/21/2023 07:10

SUBSURFACE UTILITY ENGINEERING MAP

POWER ENGINEERS, INC.

SJB GROUP PROJECT No. 100162.00

SEWERAGE AND WATER BOARD OF NEW ORLEANS

ORLEANS PARISH

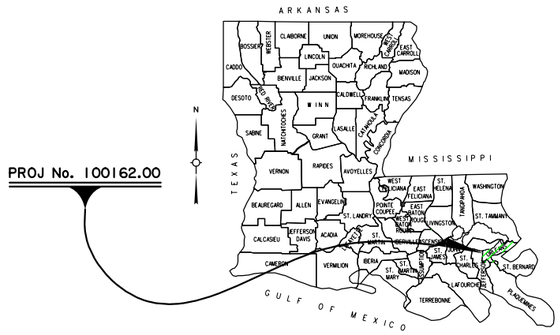

VICINITY MAP

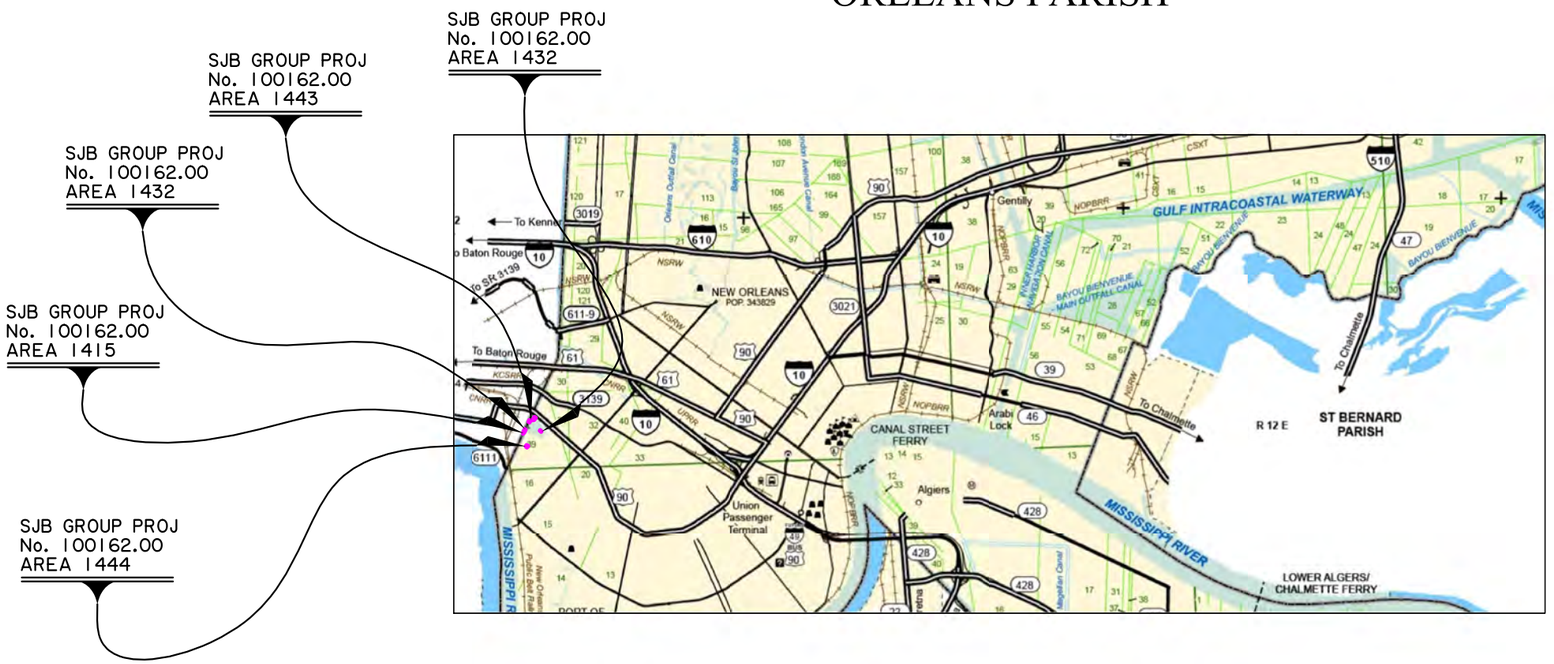

LAYOUT MAP

SCALE: 1 INCH = 1 MILE

1 0 1 2 3

STATE OF LOUISIANA
KAREN M KENNEDY
REG No. 28547
REGISTERED PROFESSIONAL ENGINEER IN CIVIL ENGINEERING

02/21/2023

SHEET NUMBER	
PARISH	ORLEANS
CONTROL SECTION	N/A
SJB GROUP PROJECT	100162.00
COMPUTED / CHECKED	AWL / KMK
DETAILED / CHECKED	TTF / KMK
DATE / SCALE	02/21/2023 / 1"=1 MILE

SUBSURFACE UTILITY ENGINEERING MAP
SJB GROUP PROJECT No. 100162.00
SEWERAGE AND WATER BOARD OF NEW ORLEANS
ORLEANS PARISH
POWER ENGINEERS, INC.

SJB GROUP, LLC

BY | REVISION DESCRIPTION | DATE

FILE NO. XX-XX-X-XXX | S.U.E. SHEET NO. TITLE

Final SUE Plan Set
J:\100162_00 Power Eng - SWBNO WPC Group 3 Projects\91 SUE Files\CAD\SUE Sheet Set\000 SUE Legend.dgn
2/21/2023 07:10

LEGEND:

UTILITY LINES:

- E(B) — UNDERGROUND POWER LINE (QL-B)
- E(C) — UNDERGROUND POWER LINE (QL-C)
- E(D) — UNDERGROUND POWER LINE (QL-D)
- SFM(B) — SEWER FORCE MAIN (QL-B)
- SFM(C) — SEWER FORCE MAIN (QL-C)
- SFM(D) — SEWER FORCE MAIN (QL-D)
- S(B) — GRAVITY SEWER/STORM DRAIN (QL-B)
- S(C) — GRAVITY SEWER/STORM DRAIN (QL-C)
- S(D) — GRAVITY SEWER/STORM DRAIN (QL-D)
- W(B) — UNDERGROUND WATER LINE (QL-B)
- W(C) — UNDERGROUND WATER LINE (QL-C)
- W(D) — UNDERGROUND WATER LINE (QL-D)
- G(B) — UNDERGROUND GAS LINE (QL-B)
- G(C) — UNDERGROUND GAS LINE (QL-C)
- G(D) — UNDERGROUND GAS LINE (QL-D)
- TFO(B) — UNDERGROUND TELEPHONE FIBER OPTIC (QL-B)
- TFO(C) — UNDERGROUND TELEPHONE FIBER OPTIC (QL-C)
- TFO(D) — UNDERGROUND TELEPHONE FIBER OPTIC (QL-D)
- TFO(B) — MULTIPLE UNDERGROUND TELEPHONE FIBER OPTIC (QL-B)
- TFO(C) — MULTIPLE UNDERGROUND TELEPHONE FIBER OPTIC (QL-C)
- TFO(D) — MULTIPLE UNDERGROUND TELEPHONE FIBER OPTIC (QL-D)
- T(B) — UNDERGROUND TELEPHONE LINE (QL-B)
- T(C) — UNDERGROUND TELEPHONE LINE (QL-C)
- T(D) — UNDERGROUND TELEPHONE LINE (QL-D)
- T⊥(B) — MULTIPLE UNDERGROUND TELEPHONE LINE (QL-B)
- T⊥(C) — MULTIPLE UNDERGROUND TELEPHONE LINE (QL-C)
- T⊥(D) — MULTIPLE UNDERGROUND TELEPHONE LINE (QL-D)
- T/FO(B) — UNDERGROUND TELEPHONE AND FIBER OPTIC (QL-B)
- T/FO(C) — UNDERGROUND TELEPHONE AND FIBER OPTIC (QL-C)
- T/FO(D) — UNDERGROUND TELEPHONE AND FIBER OPTIC (QL-D)
- TV(B) — UNDERGROUND TV LINE (QL-B)
- TV(C) — UNDERGROUND TV LINE (QL-C)
- TV(D) — UNDERGROUND TV LINE (QL-D)
- TVFO(B) — UNDERGROUND TV FIBER OPTIC (QL-B)
- TVFO(C) — UNDERGROUND TV FIBER OPTIC (QL-C)
- TVFO(D) — UNDERGROUND TV FIBER OPTIC (QL-D)
- TRP(B) — UNDERGROUND TRAFFIC POWER (QL-B)
- TRP(C) — UNDERGROUND TRAFFIC POWER (QL-C)
- TRP(D) — UNDERGROUND TRAFFIC POWER (QL-D)
- TRFO(B) — UNDERGROUND TRAFFIC FIBER OPTIC (QL-B)
- TRFO(C) — UNDERGROUND TRAFFIC FIBER OPTIC (QL-C)
- TRFO(D) — UNDERGROUND TRAFFIC FIBER OPTIC (QL-D)
- O(B) — UNDERGROUND PIPELINE (QL-B)
- O(C) — UNDERGROUND PIPELINE (QL-C)
- O(D) — UNDERGROUND PIPELINE (QL-D)
- UNK(B) — UNKNOWN LINE (QL-B)
- LIMITS OF SURVEY
- FENCE LINE

SYMBOLOGY:

GAS UTILITY SYMBOLS

- GAS RISER
- GAS VENT
- PIPELINE UTILITY MARKER
- PIPELINE VENT
- GAS UTILITY MARKER
- GAS METER
- GAS VALVE
- GAS/PIPELINE TEST HOLE

WATER UTILITY SYMBOLS

- WATER UTILITY MARKER
- WATER VALVE VAULT
- FIRE HYDRANT
- WATER METER
- WATER VALVE
- WATER SPIGOT
- WATER TEST HOLE
- WATER MANHOLE TOP

SEWER UTILITY SYMBOLS

- SEWER TREATMENT PLANT POINT
- SEWER MANHOLE TOP
- SEWER LIFT STATION POINT
- SEWER CLEANOUT
- SEWER PUMP
- SEWER UTILITY MARKER
- STORM DRAIN INLET
- SEWER TEST HOLE

MISCELLANEOUS SYMBOLS AND LINES

- END OF UTILITY SIGNAL
- UTILITY DROP
- PROBE LOCATION



02/21/2023

ELECTRIC UTILITY SYMBOLS

- POWER DROP
- POWER TRANSFORMER
- POWER VAULT
- POWER JUNCTION BOX
- GUY POLE
- COMBINATION POLE
- POWER POLE
- LIGHT STANDARD
- POWER TEST HOLE
- POWER MANHOLE TOP
- POWER HAND HOLE

TELEPHONE UTILITY SYMBOLS

- TELEPHONE UTILITY MARKER
- TELEPHONE POLE
- TELEPHONE MANHOLE TOP
- TELEPHONE PEDESTAL
- TELEPHONE CROSSCONNECT BOX
- TELEPHONE PRESSURE BOX
- TELEPHONE TEST HOLE
- COMMUNICATIONS HAND HOLE

TELEVISION UTILITY SYMBOLS

- TV MANHOLE TOP
- TV PEDESTAL
- TV UTILITY MARKER
- TV TEST HOLE

TRAFFIC UTILITY SYMBOLS

- TRAFFIC PULL BOX
- TRAFFIC CAMERA CONNECT BOX
- TRAFFIC CAMERA POLE
- LIGHT STANDARD POWER VAULT
- LIGHT STANDARD
- TRAFFIC SIGN CONNECT BOX
- TRAFFIC SIGNAL POWER VAULT
- CANTILVER TRAFFIC SIGNAL POLE
- CABLE SUSPENDED TRAFFIC SIGNAL POLE
- TRAFFIC SIGNAL STANDARD

UTILITY OWNERS:

1) AT&T DISTRIBUTION - HEATH WAXLEY - (504) 249-4505
2) CENTURYLINK/LUMEN - CHADRICK KIRKLAND - (318) 362-1737
3) ENTERGY ELECTRIC - GEORGE DAVIS - (504) 858-3281
4) ENTERGY GAS - PERRY SAMUEL - (504) 595-3709
5) SEWERAGE & WATER BOARD OF NEW ORLEANS (SWBNO) - RON SPOONER - (504) 654-9404

LA ONE CALL TICKETS:
*220827683

UTILITY NOTES:
THE SUBSURFACE UTILITIES SHOWN ON THE MAP OF SURVEY WERE IDENTIFIED USING THE INDUSTRY STANDARD DETECTION METHODOLOGIES IN ACCORDANCE WITH THE AMERICAN SOCIETY OF CIVIL ENGINEERS (ASCE) STANDARD GUIDELINE FOR THE COLLECTION AND DEPICTION OF EXISTING SUBSURFACE UTILITY DATA.

QUALITY LEVELS AND DEFINITIONS PER CI/ASCE STANDARD NO. 38-02:

QUALITY LEVEL "D" - DEPICTED ACCORDING TO UTILITY RECORD INFORMATION AND IN-FIELD VISUAL INSPECTION. NO ELECTRONIC DESIGNATING INFORMATION WAS OBTAINED.

QUALITY LEVEL "C" - EXISTING UTILITY STRUCTURES HAVE BEEN FIELD LOCATED AND SURVEYED TO ASSIST IN THE DEPICTING OF THE UTILITIES SHOWN ON THE RECORDS. NO ELECTRONIC DESIGNATING INFORMATION WAS OBTAINED.

QUALITY LEVEL "B" - INFORMATION WAS OBTAINED THROUGH THE APPLICATION OF APPROPRIATE SURFACE GEOPHYSICAL METHODS TO DETERMINE THE EXISTENCE AND APPROXIMATE HORIZONTAL POSITION OF THE SUBSURFACE UTILITIES. QL-B DATA SHOULD BE REPRODUCIBLE BY SURFACE GEOPHYSICS AT ANY POINT OF THEIR DEPICTION.

QUALITY LEVEL "A" - OBTAIN PRECISE HORIZONTAL AND VERTICAL POSITION OF THE UTILITY LINE BY EXCAVATING A TEST HOLE. THE TEST HOLE SHALL BE DONE USING VACUUM EXCAVATION OR COMPARABLE NON-DESTRUCTIVE EQUIPMENT IN A MANNER AS TO CAUSE NO DAMAGE TO UTILITY LINE.

1. UTILITIES ARE DEPICTED ON THESE PLANS IN ACCORDANCE WITH THEIR ACHIEVED "QUALITY LEVELS" AS DEFINED IN THE AMERICAN SOCIETY OF CIVIL ENGINEER'S DOCUMENT ASCE 38-02, "STANDARD GUIDELINE FOR THE COLLECTION AND DEPICTION OF EXISTING SUBSURFACE UTILITY DATA."

2. UTILITIES WITH A QUALITY LEVEL "D" LABEL ARE DEPICTED ON THE PLANS USING JUDGMENT IN INTERPRETING AVAILABLE THIRD-PARTY RECORDS OR OTHER INFORMATION.

3. UTILITIES WITH A QUALITY LEVEL "C" LABEL ARE DEPICTED ON THE PLANS USING JUDGMENT IN INTERPRETING AVAILABLE THIRD-PARTY RECORDS OR OTHER INFORMATION AND THEN CORRELATING THAT INFORMATION TO EXISTING SURVEYED STRUCTURES.

4. UTILITIES WITH A QUALITY LEVEL "B" LABEL ARE DEPICTED ON THE PLANS USING JUDGMENT IN SELECTING AND INTERPRETING APPROPRIATE GEOPHYSICAL DATA, SURVEYING TO APPROPRIATE PROJECT ACCURACIES THE PROJECTION OF THAT DATA ON THE GROUND SURFACE, AND THEN USING JUDGMENT TO CORRELATE THIRD-PARTY AVAILABLE RECORDS OR OTHER INFORMATION, IF ANY, AS PERTAINING TO THESE QL-B DEPICTIONS.

5. UTILITY SIZE AND TYPE FOR QUALITY LEVEL "B" DEPICTIONS ARE DETERMINED THROUGH AVAILABLE UTILITY OWNER INFORMATION OR IN-FIELD VISUAL INSPECTION. UTILITIES LABELED AS UNKNOWN HAVE NO CORRELATED RECORDS OR VISIBLE APPURTENANCES TO DETERMINE FUNCTION OR TYPE.

6. AN ATTEMPT TO ACHIEVE QUALITY LEVEL "B" DATA WAS MADE FOR ALL UTILITIES WITHIN THE PROJECT LIMITS FOR AREAS 1443, 1444, AND 1432 EXCEPT FOR GRAVITY SEWERS, IRRIGATION LINES, AND STORM DRAINS.

7. AN ATTEMPT TO ACHIEVE QUALITY LEVEL "B" DATA WAS MADE ONLY FOR THE ELECTRIC DUCT BANK SHOWN WITHIN THE PROJECT LIMITS FOR AREA 1415.

8. UTILITY MAPPING WAS COMPLETED ON 01/24/2023. UTILITIES MAY HAVE BEEN CHANGED OR ADDED AFTER THIS DATE.

9. RELIANCE UPON THIS DATA FOR RISK MANAGEMENT PURPOSES DURING BIDDING DOES NOT RELIEVE THE EXCAVATOR OR UTILITY OWNER FROM FOLLOWING ALL APPLICABLE UTILITY DAMAGE PREVENTION STATUTES, POLICIES, AND/OR PROCEDURES DURING EXCAVATION.

10. IT IS IMPORTANT THAT THE CONTRACTOR INVESTIGATES AND UNDERSTANDS THE SCOPE OF WORK BETWEEN THE PROJECT OWNER AND THEIR ENGINEER REGARDING THE SCOPE AND LIMITS OF THE UTILITY INVESTIGATIONS LEADING TO THESE UTILITY DEPICTIONS.

11. UTILITY RECORD DRAWINGS WERE NOT AVAILABLE FROM THE FOLLOWING UTILITY OWNERS: AT&T DISTRIBUTION. MULTIPLE EFFORTS WERE MADE TO OBTAIN THESE RECORD DRAWINGS AND THESE ATTEMPTS WERE UNSUCCESSFUL. THE CONTACT INFORMATION FOR THESE UTILITY OWNERS IS PROVIDED, BUT ANY OF THEIR UTILITIES THAT MAY BE PRESENT WITHIN THE PROJECT LIMITS MAY NOT BE SHOWN.

12. UTILITIES WITH NO ASSIGNED QUALITY LEVEL DEPICTED ON THESE PLANS ARE QL-D UNLESS OTHERWISE NOTED.

SHEET NUMBER

PARISH	CONTROL SECTION	SJB GROUP PROJECT
ORLEANS	N/A	100162.00

COMPUTED	AWL	
CHECKED	KMK	
DETAILED	TTF	
CHECKED	KMK	
DATE	02/21/2023	
SCALE	N/A	

SUBSURFACE UTILITY ENGINEERING MAP
SJB GROUP PROJECT No. 100162.00
SEWERAGE AND WATER BOARD OF NEW ORLEANS
ORLEANS PARISH
POWER ENGINEERS, INC.

SJB GROUP, LLC

BY	REVISION DESCRIPTION	DATE

FILE NO. XX-XX-X-XXX | S.U.E. SHEET NO. LEGEND

Final SUE Plan Set

J:\100162_00 Power Eng - SWBNO WPC Group 3 Projects\91 SUE Files\CAD\SUE Sheet Set\KEY.dgn 2/21/2023 07:10

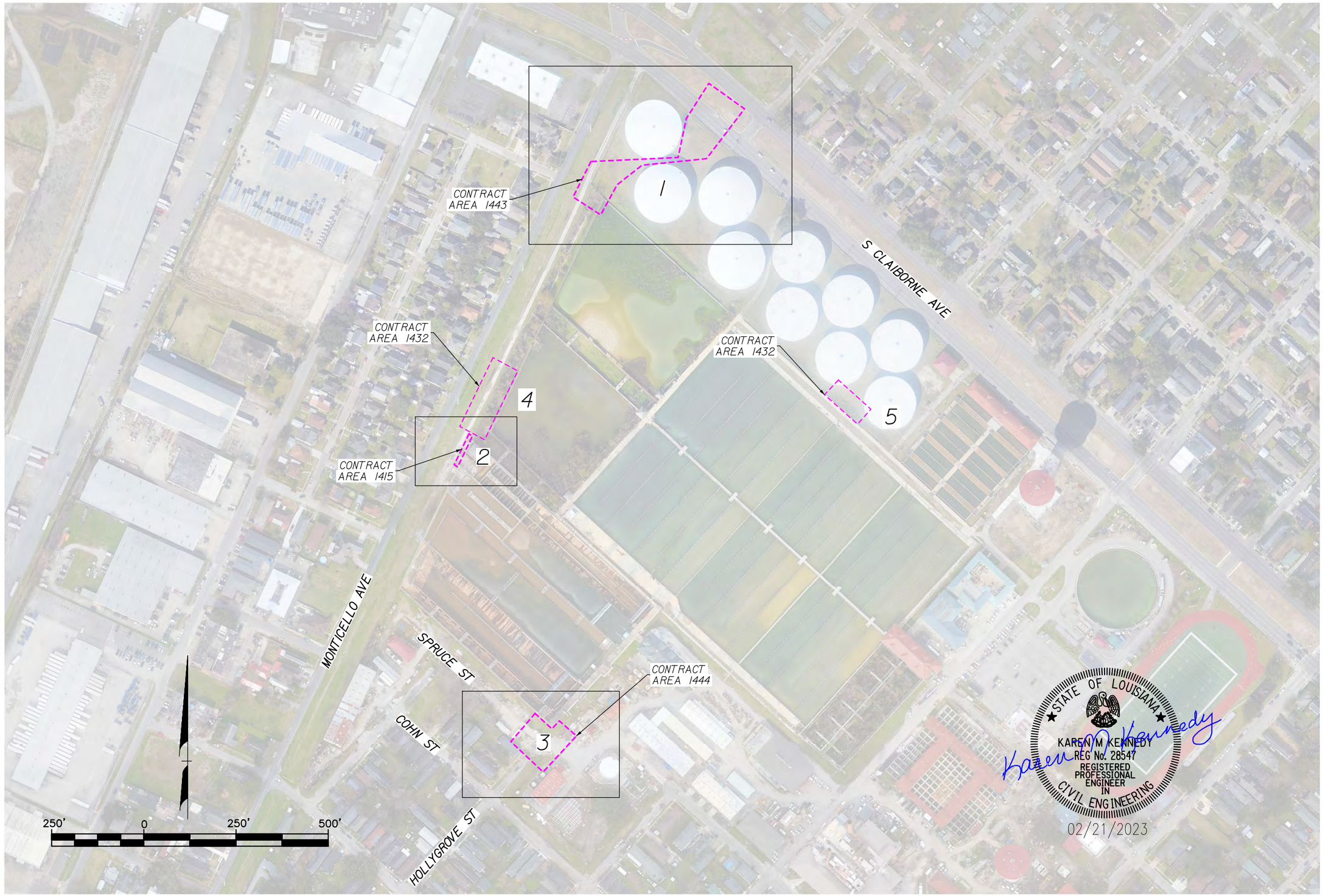

STATE OF LOUISIANA
KAREN M KENNEDY
REG No. 28547
REGISTERED PROFESSIONAL ENGINEER IN CIVIL ENGINEERING
02/21/2023

SUBSURFACE UTILITY ENGINEERING MAP
SJB GROUP PROJECT No. 100162.00
SEWERAGE AND WATER BOARD OF NEW ORLEANS
ORLEANS PARISH
POWER ENGINEERS, INC.

SJB GROUP, LLC

SHEET NUMBER	
PARISH	ORLEANS
CONTROL SECTION	N/A
SJB GROUP PROJECT	100162.00
COMPUTED / CHECKED	AWL / KMK
DETAILED / CHECKED	TTF / KMK
DATE / SCALE	02/21/2023 / 1"=250'

BY	REVISION DESCRIPTION	DATE

FILE NO. XX-XX-X-XXX S.U.E. SHEET NO. KEY

50' 0 50' 100'

APPROXIMATE LOCATION

SWBNO 20' CONCRETE COVERED CANAL (TOP EL=-5.46' TOP INSIDE EL=-6.87' BOTTOM INSIDE EDGE EL=-15.85')

S CLAIBORNE AVE

MISTLETOE ST

SWBNO (416 FEEDER)

SWBNO 24" DI

SWBNO 20' CONCRETE COVERED CANAL (BOTTOM INSIDE EDGE)

ENTERGY 2" PVC

SWBNO 2-2" PVC

ENTERGY 2" PVC

TEST HOLE 3

TEST HOLE 2

TEST HOLE 4

SWBNO 20' CONCRETE COVERED CANAL (TOP OUTSIDE EDGE)

SWBNO 50" STEEL

TEST HOLE 7

TEST HOLE 5

SWBNO 20' CONCRETE COVERED CANAL (TOP EL=-5.27' TOP INSIDE EL=-6.69' BOTTOM INSIDE EDGE EL=-15.31')

SWBNO 2-2" PVC

MONTICELLO AVE

SWBNO 24" DI

SWBNO 2" PVC

SWBNO 1" PVC

SECURITY BUILDING

SWBNO 2-2" PVC (THIS LINE ALSO CONTAINS CATV)

SWBNO 1" PVC

SWBNO 2-2" PVC

SWBNO 6" CI

SWBNO 6" DI

UNABLE TO VERIFY LOCATION OF 6" CI WATER MAIN DURING UTILITY INVESTIGATION. (POTENTIALLY ABANDONED, PER RECORD)

SWBNO 15"x12" CONCRETE DUCT (516 FEEDER CONCRETE COVERED)

SWBNO 1" PVC

SIDEWALK

SWBNO

UNABLE TO VERIFY LOCATION OF 516 FEEDER (OLD) DURING UTILITY INVESTIGATION. (POTENTIALLY ABANDONED, PER RECORD)

E(B) E(D) W(B) W(D) TFO(B) UNK(B) S(E)

STATE OF LOUISIANA
KAREN M KENNEDY
REG No. 28547
REGISTERED PROFESSIONAL ENGINEER IN CIVIL ENGINEERING

02/21/2023

SHEET NUMBER	
PARISH	ORLEANS
CONTROL SECTION	N/A
SJB GROUP PROJECT	100162.00
COMPUTED / CHECKED	AWL / KMK
DETAILED / CHECKED	TTF / KMK
DATE / SCALE	02/21/2023 / 1"=50'

SUBSURFACE UTILITY ENGINEERING MAP
SJB GROUP PROJECT No. 100162.00
SEWERAGE AND WATER BOARD OF NEW ORLEANS
ORLEANS PARISH
POWER ENGINEERS, INC.

SJB GROUP, LLC

BY	REVISION DESCRIPTION	DATE

FILE NO. XX-XX-X-XXX | S.U.E. SHEET NO. 1

MATCHLINE SHEET 4

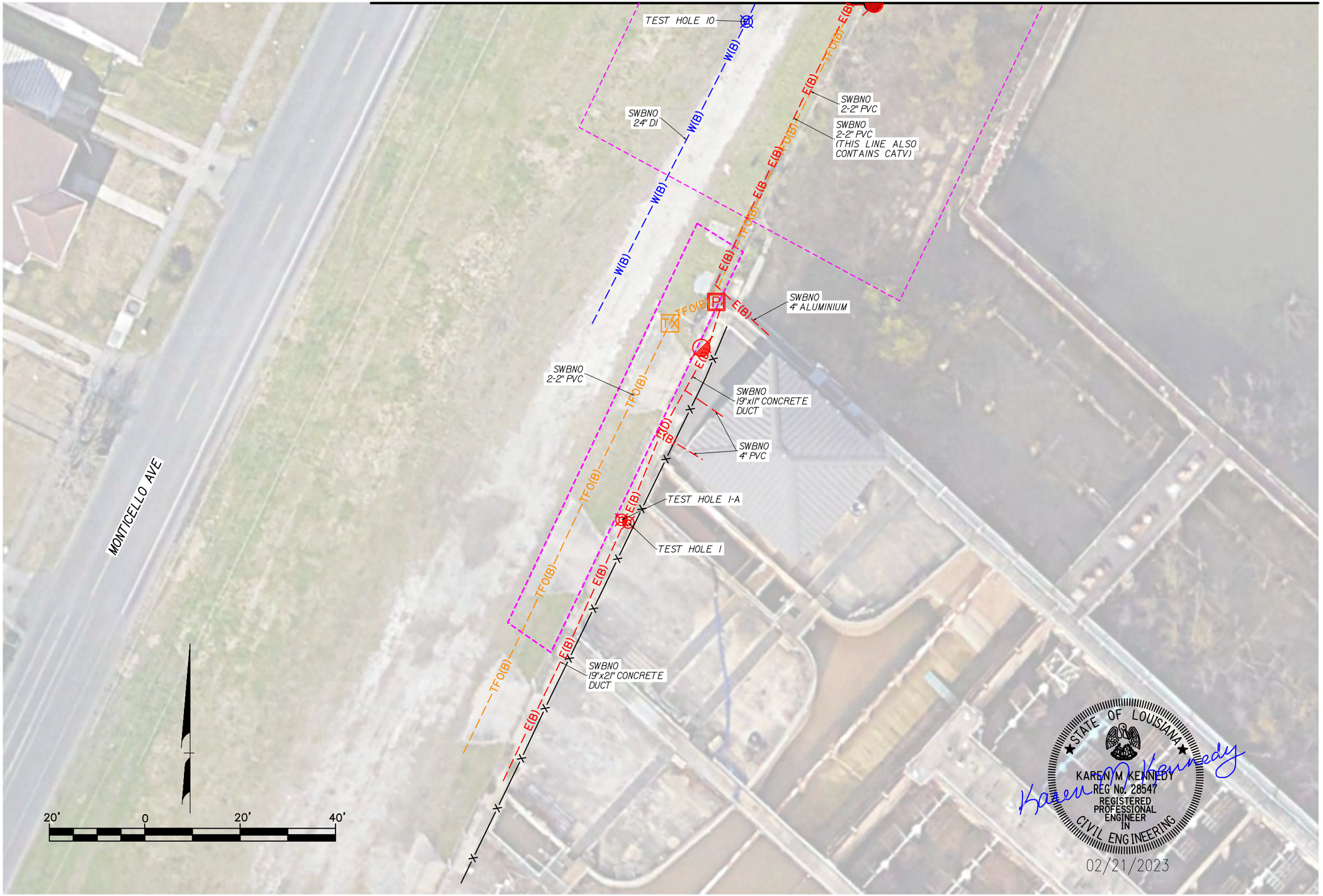

STATE OF LOUISIANA
KAREN M KENNEDY
REG No. 28547
REGISTERED
PROFESSIONAL
ENGINEER
IN
CIVIL ENGINEERING
02/21/2023

SHEET NUMBER	
PARISH	ORLEANS
CONTROL SECTION	N/A
SJB GROUP PROJECT	100162.00
COMPUTED	AWL
CHECKED	KMK
DETAILED	TTF
CHECKED	KMK
DATE	02/21/2023
SCALE	1"=20'

SUBSURFACE UTILITY ENGINEERING MAP
SJB GROUP PROJECT No. 100162.00
SEWERAGE AND WATER BOARD OF NEW ORLEANS
ORLEANS PARISH
POWER ENGINEERS, INC.

SJB GROUP, LLC

BY	REVISION DESCRIPTION	DATE

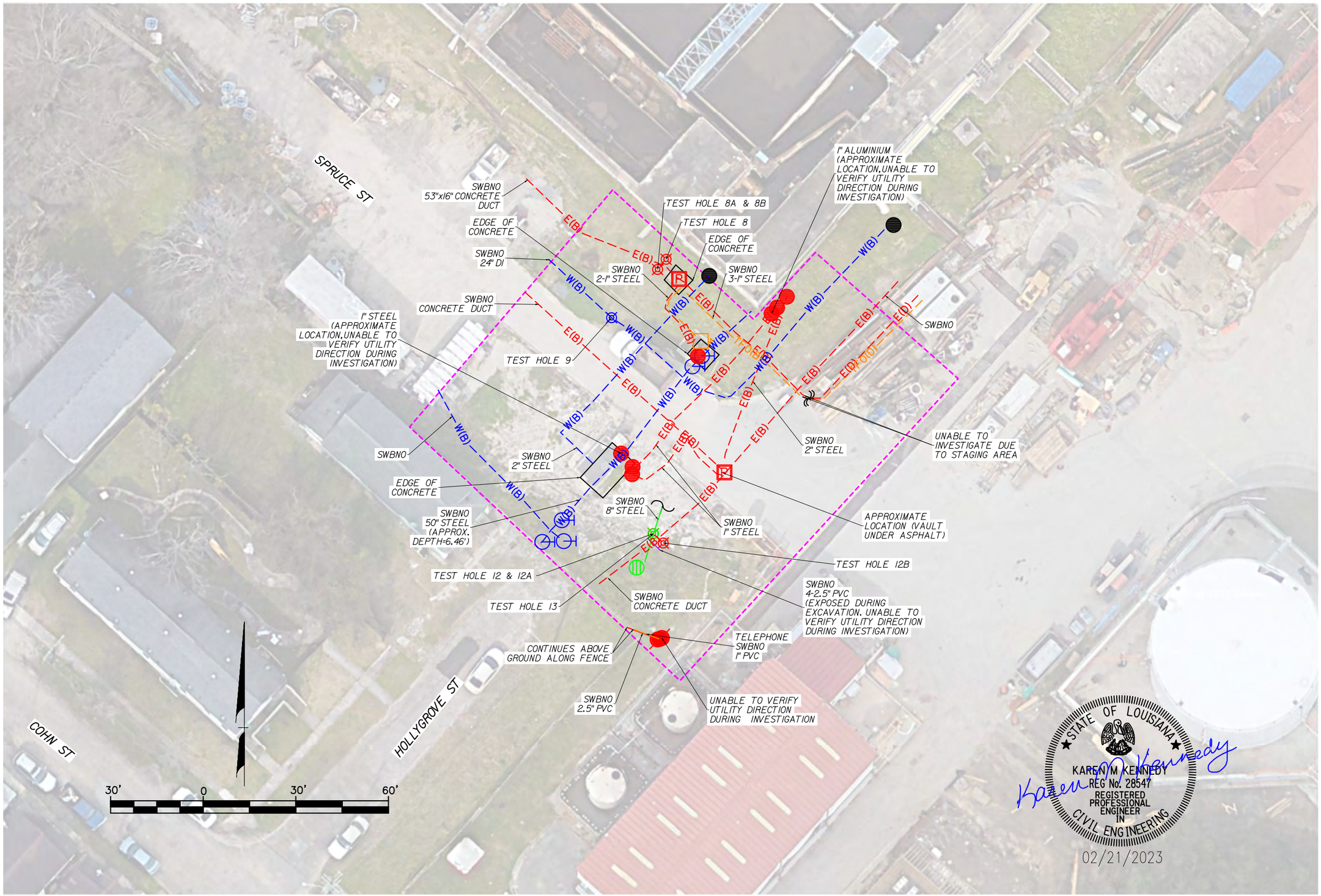

STATE OF LOUISIANA
KAREN M KENNEDY
REG No. 28547
REGISTERED PROFESSIONAL ENGINEER IN CIVIL ENGINEERING
02/21/2023

SUBSURFACE UTILITY ENGINEERING MAP
SJB GROUP PROJECT No. 100162.00
SEWERAGE AND WATER BOARD OF NEW ORLEANS
ORLEANS PARISH
POWER ENGINEERS, INC.

SJB GROUP, LLC

SHEET NUMBER	
PARISH	ORLEANS
CONTROL SECTION	N/A
SJB GROUP PROJECT	100162.00
COMPUTED AWL / CHECKED KMK	
DETAILED TTF / CHECKED KMK	
DATE	02/21/2023
SCALE	1"=30'

REVISION DESCRIPTION | BY | DATE

FILE NO. XX-XX-X-XXX | S.U.E. SHEET NO. 3

Final SUE Plan Set
J:\100162_00 Power Eng - SWBNO WPC Group 3 Projects\91 SUE Files\CAD\SUE Sheet Set\SHEET 3.dgn
2/21/2023 07:10

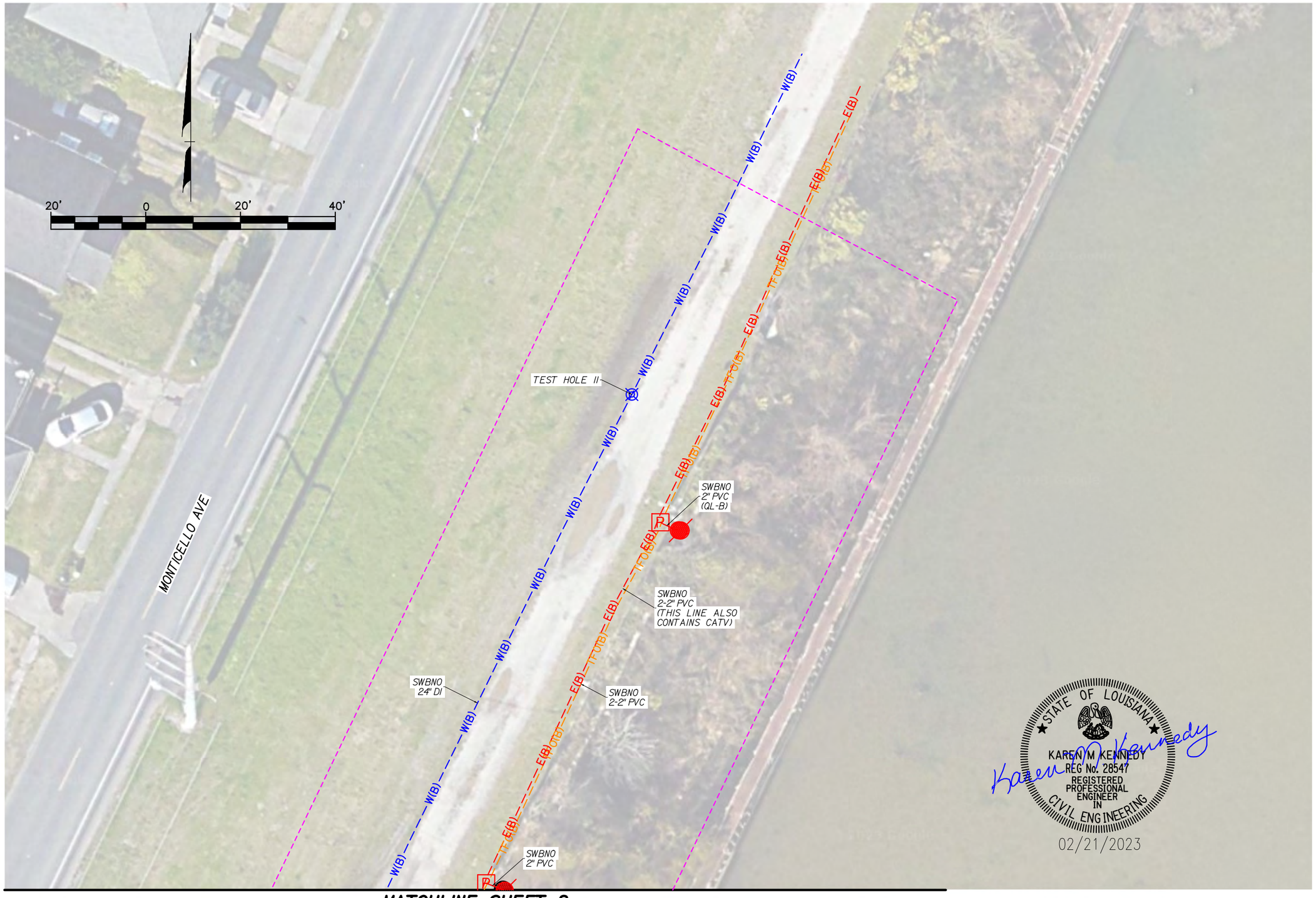

STATE OF LOUISIANA
KAREN M KENNEDY
REG No. 28547
REGISTERED PROFESSIONAL ENGINEER IN CIVIL ENGINEERING
02/21/2023

SHEET NUMBER	
PARISH	ORLEANS
CONTROL SECTION	N/A
SJB GROUP PROJECT	100162.00
COMPUTED / CHECKED	AWL / KMK
DETAILED / CHECKED	TTF / KMK
DATE / SCALE	02/21/2023 / 1"=20'

SUBSURFACE UTILITY ENGINEERING MAP
SJB GROUP PROJECT No. 100162.00
SEWERAGE AND WATER BOARD OF NEW ORLEANS
ORLEANS PARISH
POWER ENGINEERS, INC.

SJB GROUP, LLC

BY	REVISION DESCRIPTION	DATE

FILE NO. XX-XX-X-XXX | S.U.E. SHEET NO. 4

Final SUE Plan Set
J:\100162_00 Power Eng - SWBNO WPC Group 3 Projects\91 SUE Files\CAD\SUE Sheet Set\SHEET 5.dgn
2/21/2023 07:11

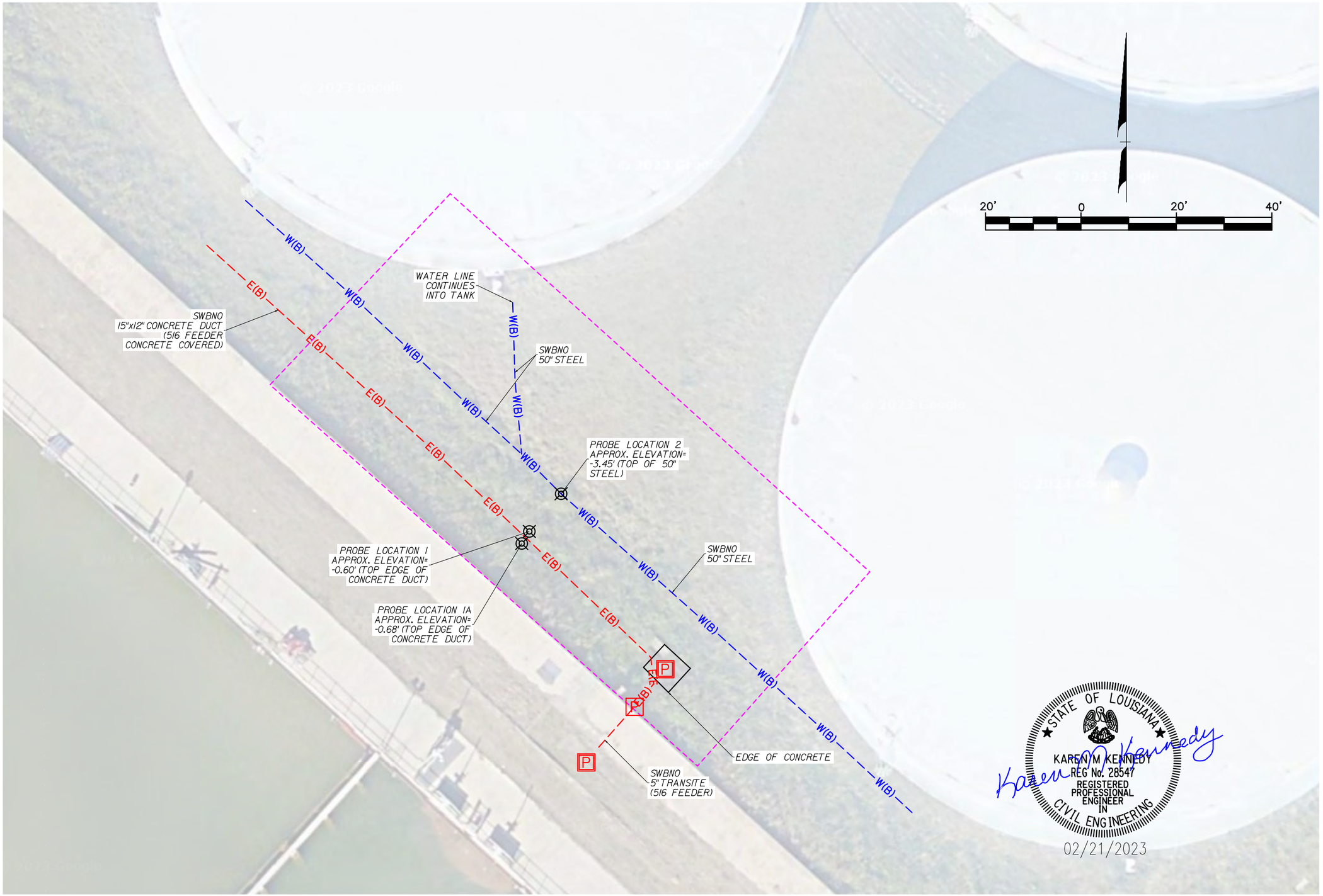

STATE OF LOUISIANA
KAREN M KENNEDY
REG No. 28547
REGISTERED
PROFESSIONAL
ENGINEER
IN
CIVIL ENGINEERING

02/21/2023

SHEET NUMBER	
PARISH	ORLEANS
CONTROL SECTION	N/A
SJB GROUP PROJECT	100162.00
COMPUTED / CHECKED	AWL / KMK
DETAILED / CHECKED	TTF / KMK
DATE / SCALE	02/21/2023 1"=20'

SUBSURFACE UTILITY ENGINEERING MAP
SJB GROUP PROJECT No. 100162.00
SEWERAGE AND WATER BOARD OF NEW ORLEANS
ORLEANS PARISH
POWER ENGINEERS, INC.

SJB GROUP, LLC

BY	REVISION DESCRIPTION	DATE

FILE NO. XX-XX-X-XXX | S.U.E. SHEET NO. 5

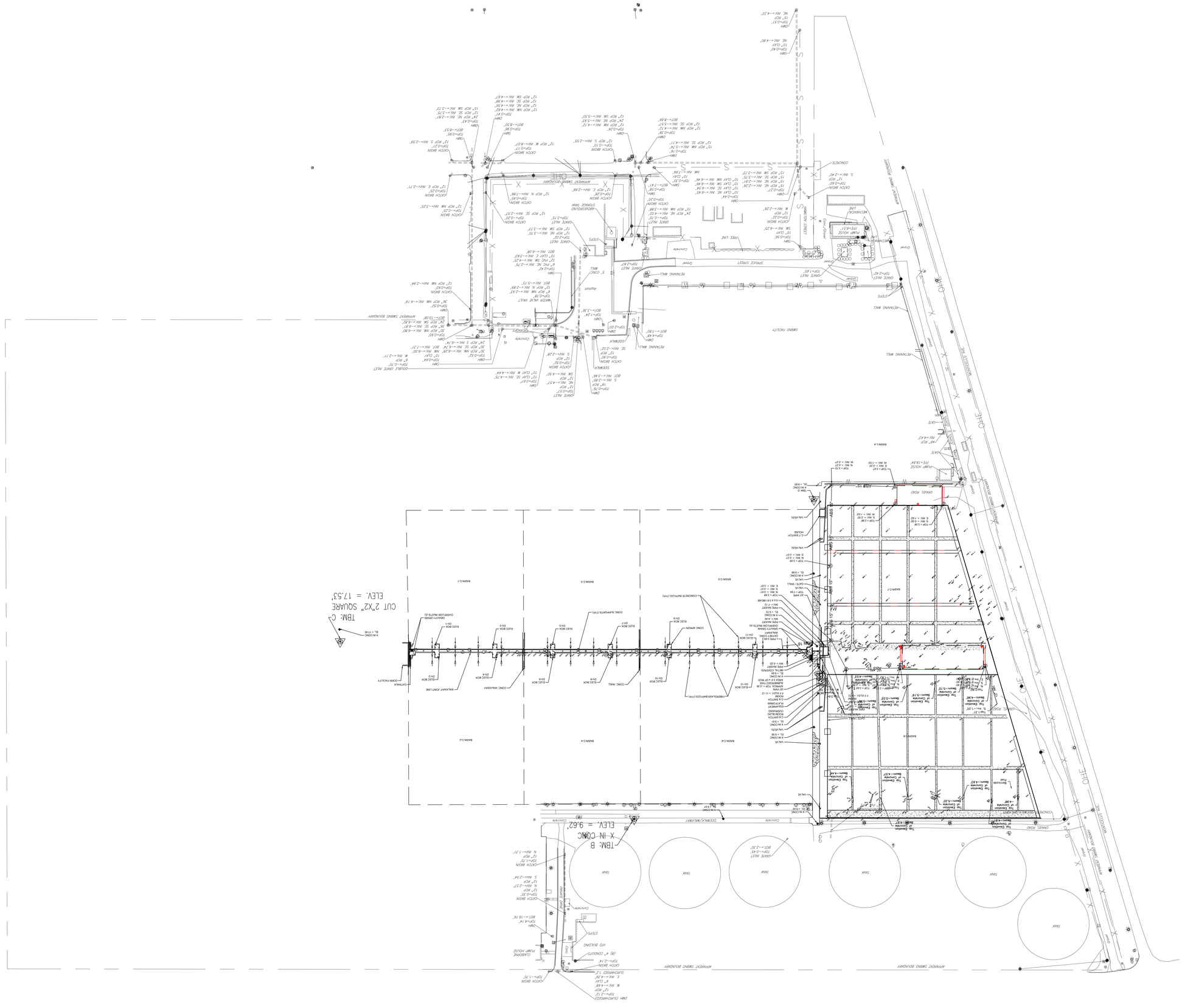
TBM: B
X =N: CONC
ELEV. = 9.62'
TBM: C
CUT 2"X2" SQUARE
ELEV. = 17.53'
ANNUNCIATOR SWING
SWING FACILITY
SHUTTLE STREET
SCREWLEY/BEARRY
ANNUNCIATOR SWING BOUNDARY
ANNUNCIATOR SWING BOUNDARY
ANNUNCIATOR SWING BOUNDARY
RETAINING WALL
RETAINING WALL
RETAINING WALL

FILTER BACKWASH RECYCLE FACILITY

CARROLLTON WATER PURIFICATION PLANT

CONTRACT NUMBER 1172

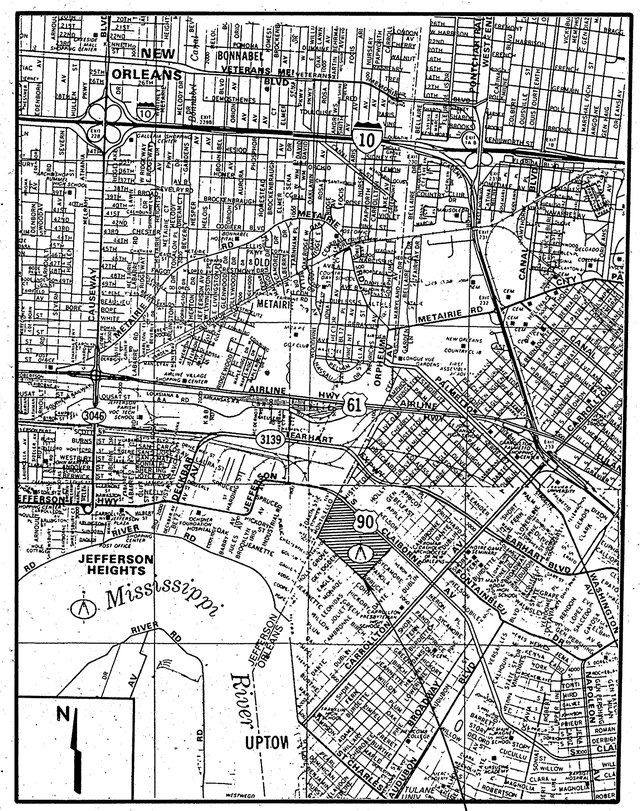

PROJECT LOCATION

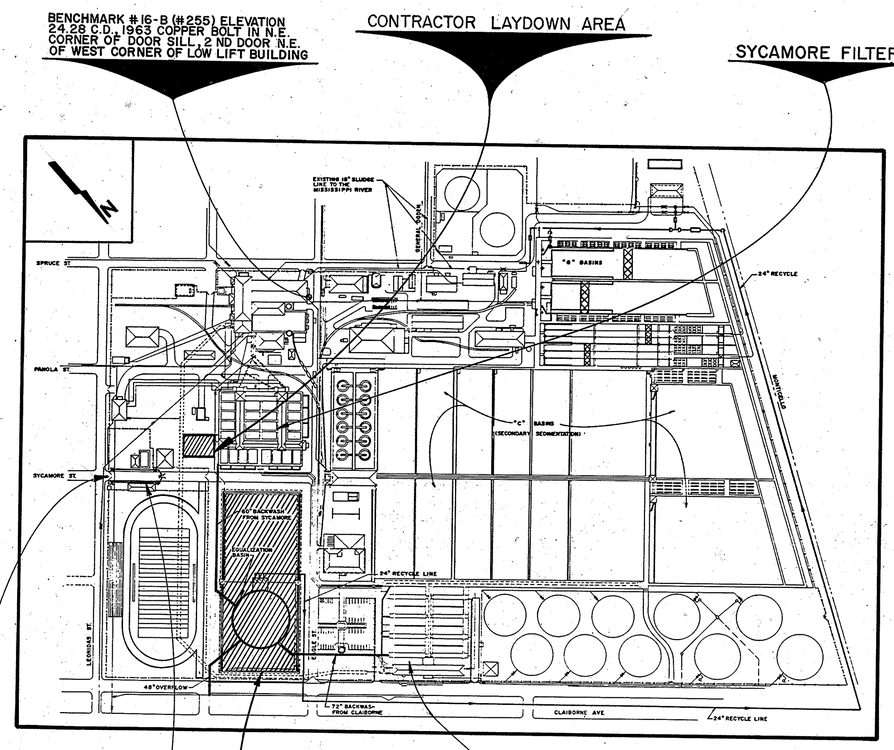

CONTRACTOR'S ACCESS

ACCESS FENCING

PROJECT SITE

CLAIBORNE FILTERS

INDEX TO DRAWINGS

Drawing No.	Sheet No.	Title
		General
11685-W-58	Sheet 1	G-1 Drawing Index & Location Plan
11685-W-58	Sheet 2	G-2 Process and Instrumentation Diagram
11685-W-58	Sheet 3	G-3 Hydraulic Profile
11685-W-58	Sheet 4	G-4 Log of Borings
11685-W-58	Sheet 5	G-5 Log of Borings
		Civil
11685-W-58	Sheet 6	C-1 Demolition Plan
11685-W-58	Sheet 7	C-2 Demolition Section
11685-W-58	Sheet 8	C-3 Site Plan - Location, Grading & Drainag
11685-W-58	Sheet 9	C-4 Sections
11685-W-58	Sheet 10	C-5 Details
11685-W-58	Sheet 11	C-6 Profile
		Mechanical
11685-W-58	Sheet 12	M-1 Piping Legend
11685-W-58	Sheet 13	M-2 Mechanical Plan
11685-W-58	Sheet 14	M-3 Recycle Pump Station - Plan & Section
11685-W-58	Sheet 15	M-4 Diversion Box/Venturi Pit
11685-W-58	Sheet 16	M-5 Claiborne Filter Modification
11685-W-58	Sheet 17	M-6 Mechanical Details
11685-W-58	Sheet 18	M-7 Mechanical Details
11685-W-58	Sheet 19	M-8 Mechanical Details
11685-W-58	Sheet 20-32	M-9 through M-21 Pipeline Plan and Profiles
		Architectural
11685-W-58	Sheet 33	A-1 Electrical Building Plan
11685-W-58	Sheet 34	A-2 Electrical Building - Elevations
11685-W-58	Sheet 35	A-3 Electrical Building - Sections
		Structural
11685-W-58	Sheet 36	S-1 Structural Notes and Work Sequence
11685-W-58	Sheet 37	S-2 Equalization Basin - Piling Plan
11685-W-58	Sheet 38	S-3 Equalization Basin - Joint Layout
11685-W-58	Sheet 39	S-4 Equalization Basin - Piping Orientation
11685-W-58	Sheet 40	S-5 Equalization Basin - Sections & Details
11685-W-58	Sheet 41	S-6 Equalization Basin - Sections & Details
11685-W-58	Sheet 42	S-7 Recycle Pump Station - Piling Plan
11685-W-58	Sheet 43	S-8 Recycle Pump Station - Plan & Section
11685-W-58	Sheet 44	S-9 Recycle Pump Station - Sections
11685-W-58	Sheet 45	S-10 Claiborne Drain Piping Modifications
11685-W-58	Sheet 46	S-11 Diversion Box/Venturi Pit
11685-W-58	Sheet 47	S-12 Bulkhead Plan & Sections
11685-W-58	Sheet 48	S-13 Details
11685-W-58	Sheet 49	S-14 Standard Details
	NA	~~S-15 - S-23~~ Included in This contract
		Electrical
4280-P-1	Sheet 50	E-1 Electrical - Site Plan
4280-P-2	Sheet 51	E-2 Electrical - One Line Diagram
4280-P-3	Sheet 52	E-3 Electrical - Substation Elevation
4280-P-4	Sheet 53	E-4 Electrical Building Floor Plan
4280-P-5	Sheet 54	E-5 Bubbler Panel
4280-P-6	Sheet 55	E-6 Electrical Details
4280-P-7	Sheet 56	E-7 Wiring Diagram
4280-P-8	Sheet 57	E-8 Wiring Diagram
4280-P-9	Sheet 58	E-9 Standard S&WB Details

"SUPPLEMENTAL" RECORD DRAWING INFORMATION

*SHEET 59	1 OF 4
*SHEET 60	2 OF 4
*SHEET 61	3 OF 4
*SHEET 62	4 OF 4

*THESE DRAWINGS ARE NOT PART OF THE CONTRACT DOCUMENTS AND ARE INCLUDED FOR INFORMATION ONLY.

RECORD DRAWING

These record drawings have been prepared based on information provided by others. The Engineer has not verified the accuracy of such information and shall not be responsible for any errors or omissions which may be incorporated herein as a result.

REV.	DATE	DESCRIPTION	BY

SEWERAGE AND WATER BOARD OF NEW ORLEANS

CARROLLTON FILTER BACKWASH RECYCLE FACILITY

CONTRACT NO. 1172

DRAWING INDEX & LOCATION PLAN

C & S CONSULTANTS, INC.
CONSULTING ENGINEERS

JMM James M. Montgomery
Consulting Engineers, Inc.
Metairie, Louisiana

STATE OF LOUISIANA
RONALD M. CASS
REG. No. 23376
PROFESSIONAL ENGINEER
CIVIL ENGINEERING
2/26/91

G-1

WARNING 0 1/2 1
IF THIS BAR DOES NOT MEASURE 1" THEN DRAWING IS NOT TO SCALE

SUBMITTED Ronald M. Cass 23376 2/26/91
PROJECT ENGINEER R.C.E. NO. DATE

RECOMENDED Ronald J. Bellard 2/26/91
JAMES M. MONTGOMERY CONSULTING ENGINEERS, INC. R.C.E. NO. DATE

DR. S.G.
TRC. ——
CK. R.C.
AP. R.C.
SCALE NONE
DATE 1/15/91

S. Joseph Sullivan
GENERAL SUPERINTENDENT

DWG. No. 11685-W-58

SET NO. SHEET NO. 1 OF 58

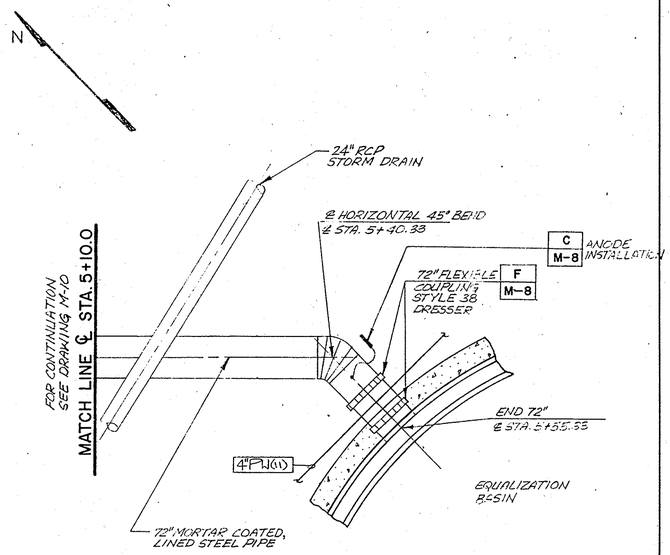

PLAN
SCALE: 1" = 10'

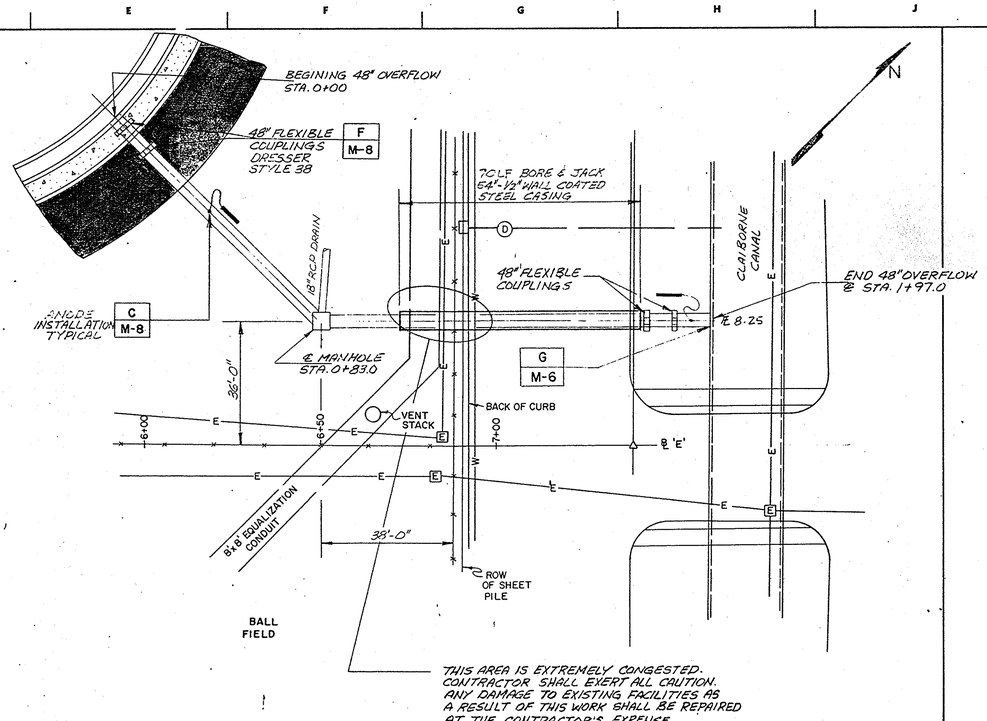

PLAN
SCALE: 1"=20'

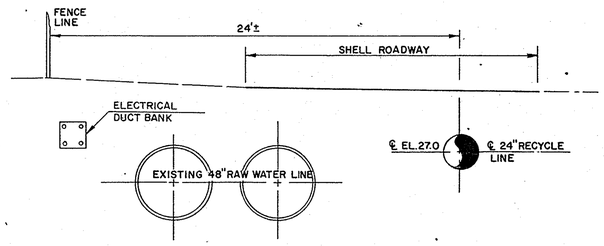

SECTION 1 M-19
SCALE: 1"=4'

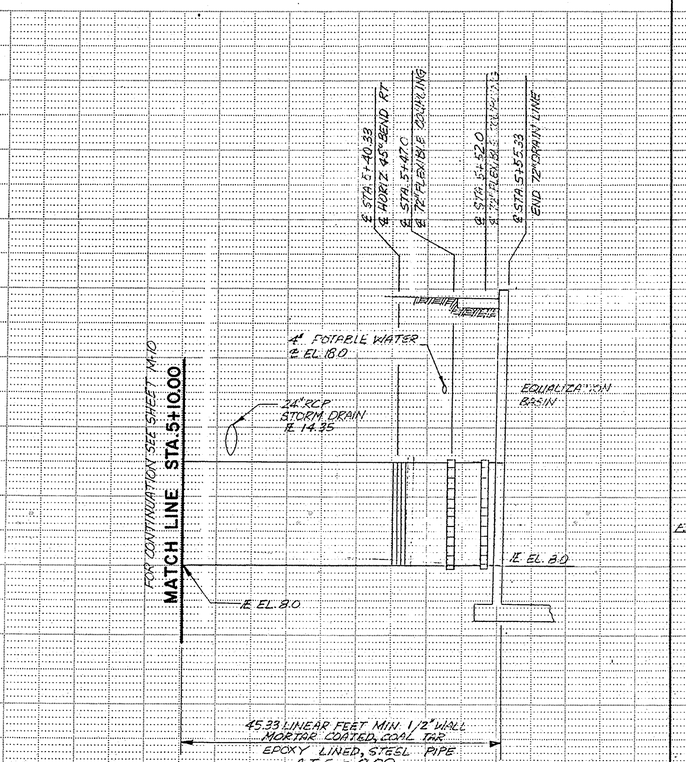

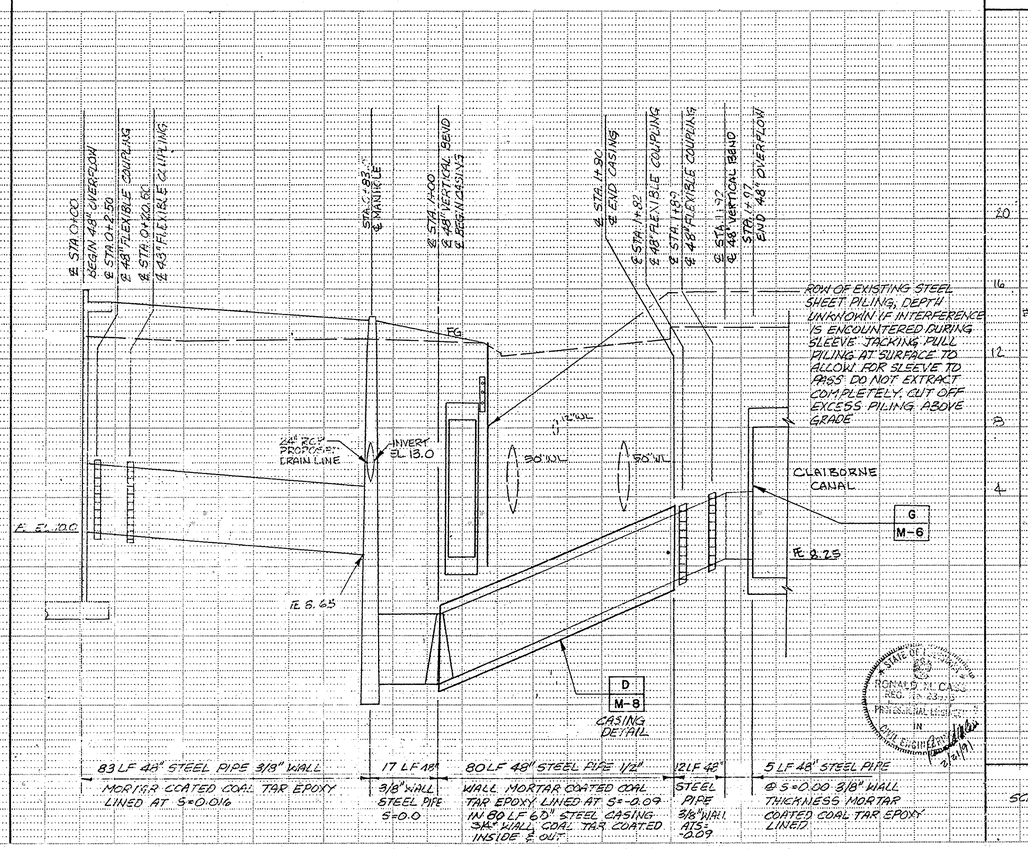

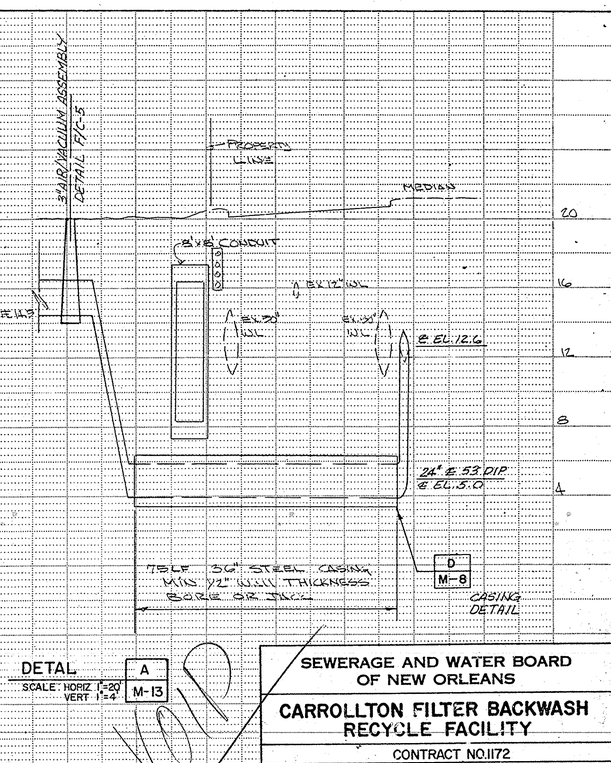

DETAIL A M-13
SCALE: HORIZ 1"=20' VERT 1"=4'

SCALE: HORIZ 1"=20' VERT. 1"=4'

M-11

SEWERAGE AND WATER BOARD OF NEW ORLEANS

CARROLLTON FILTER BACKWASH RECYCLE FACILITY

CONTRACT NO. 1172

DR. S.G.	GENERAL SUPERINTENDENT
TRC. —	
CK. R.C.	DWG. No. 11685-W-58
AP. R.C.	
SCALE AS SHOWN	SET NO. . SHEET NO. 22 OF 58
DATE 1/15/91	

AE 45959

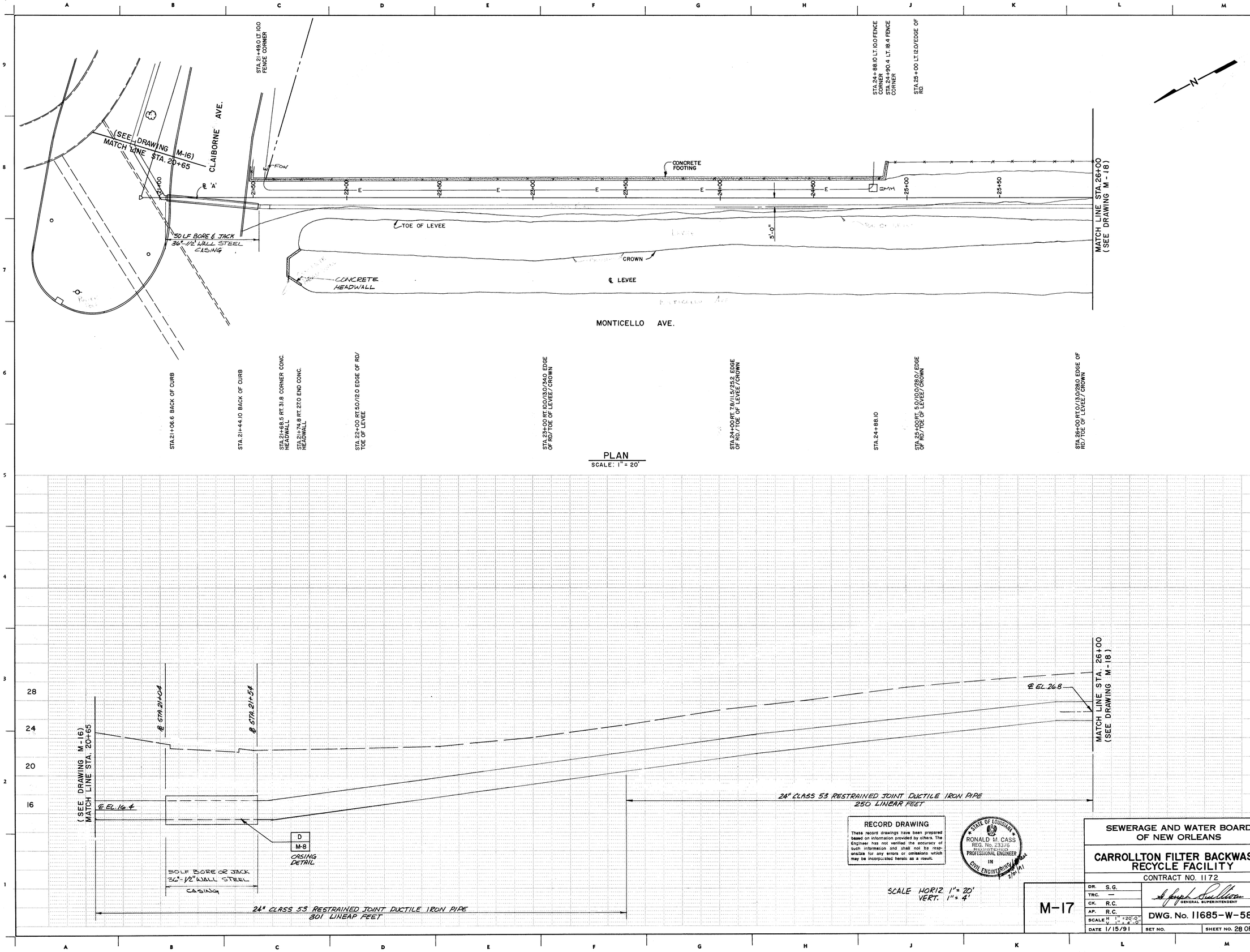

PLAN
SCALE: 1" = 20'

RECORD DRAWING

These record drawings have been prepared based on information provided by others. The Engineer has not verified the accuracy of such information and shall not be responsible for any errors or omissions which may be incorporated herein as a result.

STATE OF LOUISIANA
RONALD M. CASS
REG. No. 23376
REGISTERED
PROFESSIONAL ENGINEER
IN
CIVIL ENGINEERING
2/24/91

SCALE HORIZ. 1" = 20'
VERT. 1" = 4'

M-17

SEWERAGE AND WATER BOARD OF NEW ORLEANS

CARROLLTON FILTER BACKWASH RECYCLE FACILITY

CONTRACT NO. 1172

DR. S.G.	
TRC. —	
CK. R.C.	GENERAL SUPERINTENDENT
AP. R.C.	DWG. No. 11685-W-58
SCALE H 1" = 20'-0" V 1" = 4'-0"	
DATE 1/15/91	SET NO. / SHEET NO. 28 OF 58

STA. 26+00 LT. 12.0 EDGE OF RD.

STA. 26+66.0 LT. 14.9 EDGE OF CONC.

STA. 26+76.3 LT. 14.95 EDGE OF CONC.

STA. 27+00 LT. 13.5 EDGE OF RD.

STA. 28+00 LT. 12.0 EDGE OF RD.

STA. 29+00 LT. 11.4 EDGE OF RD.

STA. 30+00 LT. 11.3 EDGE OF RD.

STA. 30+44.0 LT. 14.30 EDGE OF CONC.

STA. 30+54.8 LT. 14.25 EDGE OF CONC.

STA. 31+00 LT. 12.0 EDGE OF RD.

STA. 32+00 LT. 6.6 EDGE OF RD.

N

(SEE DRAWING M-17) MATCH LINE STA. 26+00

26+50 | 5'-0" | 27+00 | 27+50 | 28+00 | 28+50 SHELL RD. | 29+00 | ℄ 'A' | 29+50 | 30+00 | 30+50 | 31+00 | 31+50

MATCH LINE STA. 32+00 (SEE DRAWING M-19)

SMALL DITCH

24" RECYCLE LINE

TOE OF LEVEE

TOE OF LEVEE

CROWN OF LEVEE

CROWN OF LEVEE

STA. 26+00 RT. 0/13.0/23.0 EDGE OF RD./TOE/CROWN

STA. 27+00 RT. 0/11.0/23.0 EDGE OF RD./TOE/CROWN

STA. 28+00 RT. 0/11.0/25.0 EDGE OF RD./TOE/CROWN

STA. 29+00 RT. 0/11.0/24.0 EDGE OF RD./TOE/CROWN

STA. 30+00 RT. 0/10.5/24.0 EDGE OF RD./TOE/CROWN

STA. 31+00 RT. 0/9.3/17.5 EDGE OF RD./TOE/CROWN

STA. 32+00 RT. 5.3/13.0/20.0 EDGE OF RD./TOE/CROWN

PLAN

SCALE: 1" = 20'

(SEE DRAWING M-17) MATCH LINE STA. 26+00

℄ EL. 26.8

24" CLASS 53 RESTRAINED JOINT DUCTILE IRON PIPE

600 L.F. 24" CLASS 53 RESTRAINED JOINT DUCTILE IRON PIPE

℄ EL. 26.8

MATCH LINE STA. 32+00 (SEE DRAWING M-19)

RECORD DRAWING

These record drawings have been prepared based on information provided by others. The Engineer has not verified the accuracy of such information and shall not be responsible for any errors or omissions which may be incorporated herein as a result.

STATE OF LOUISIANA
RONALD M. CASS
REG. No. 23376
REGISTERED PROFESSIONAL ENGINEER IN CIVIL ENGINEERING
5/2/91

SCALE: HORIZ. 1" = 20'
VERT. 1" = 4'

SEWERAGE AND WATER BOARD OF NEW ORLEANS

CARROLLTON FILTER BACKWASH RECYCLE FACILITY

CONTRACT NO. 1172

M-18

DR. S.G.
TRC. —
CK. R.C.
AP. R.C.
SCALE H 1" = 20'-0" V 1" = 4'-0"
DATE 1/15/91

GENERAL SUPERINTENDENT

DWG. No. 11685-W-58

SET NO.

SHEET NO. 29 OF 58

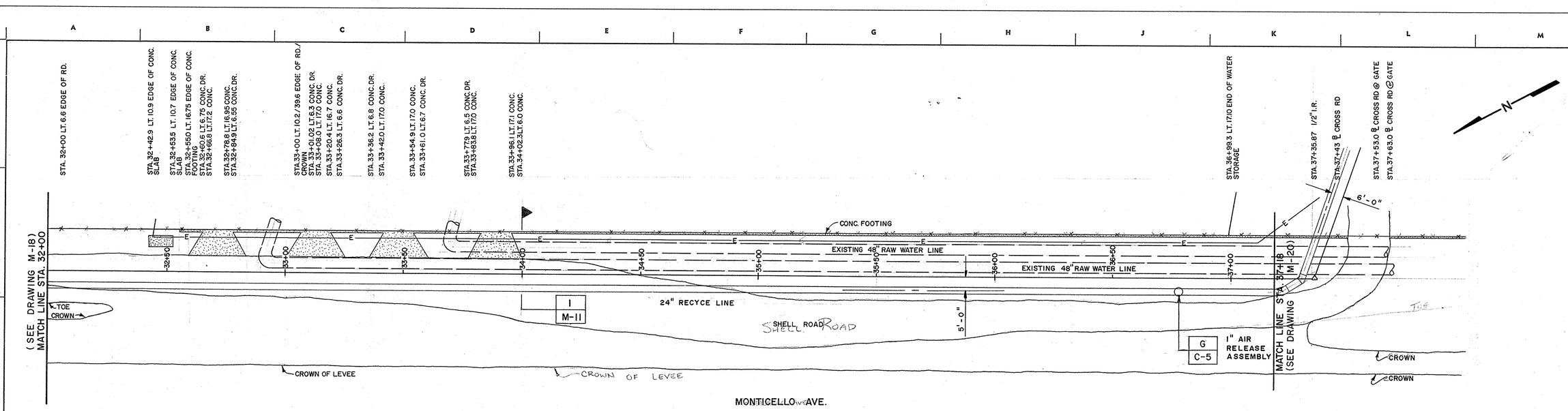

PLAN

SCALE: 1" = 20'

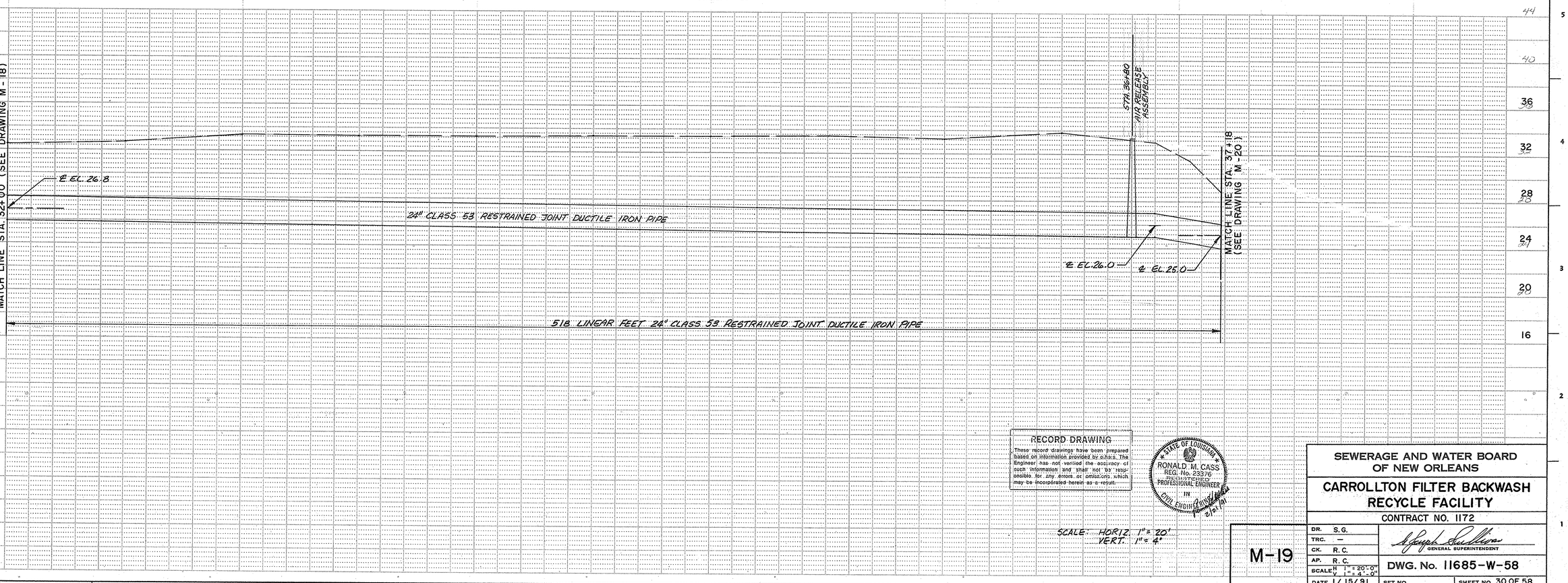

RECORD DRAWING

These record drawings have been prepared based on information provided by others. The Engineer has not verified the accuracy of such information and shall not be responsible for any errors or omissions which may be incorporated herein as a result.

STATE OF LOUISIANA
RONALD M. CASS
REG. No. 23376
REGISTERED PROFESSIONAL ENGINEER IN CIVIL ENGINEERING
2/21/91

SCALE: HORIZ. 1" = 20'
VERT. 1" = 4'

M-19

SEWERAGE AND WATER BOARD OF NEW ORLEANS

CARROLLTON FILTER BACKWASH RECYCLE FACILITY

CONTRACT NO. 1172

DR. S.G.	GENERAL SUPERINTENDENT
TRC. —	
CK. R.C.	
AP. R.C.	DWG. No. 11685-W-58
SCALE H 1" = 20'-0" V 1" = 4'-0"	
DATE 1/15/91	SET NO. SHEET NO. 30 OF 58

AP 459598

(SEE DRAWING M-19)
MATCH LINE STA. 37+18

N

"G" BASINS 'G' BASINS

FRENCH DRAINS TO REMAIN INTACT
REPAIR/REPLACE WHERE PROPOSED
PIPE LINE CROSSES TO MAINTAIN FUNCTION

B
M-6

℄ 45° WYE
@ STA. 38+25.0

C
M-6
ISOLATION
VALVE BOX

EXISTING ELEC. DUCTBANK

24"RECYCLE LINE

SHELL ROAD

EXISTING ELEC. DUCTBANK

6'-0"

E

MECHANICAL
JOINT PLUG

STA.42+73.9 LT.36.0
S&WB POWER

STA.42+92.3 LT.16.3/186
GUARD POST/COR.VALVE
BOX/COR.OF CONC.

STA.43+01.0 LT.16.8/186
GUARD POST/COR.OF VALVE
BOX

STA.43+20.9 LT.23.0 EDGE OF
RD.

℄ 45° WYE
@ STA. 42+78.0

MATCH ℄ LINE STA. 43+03
(SEE DRAWING M-21)

DRAIN LINE

TOE OF LEVEE

FENCE

FENCE

DIRT ROAD

ELECT VAULT

BLDG
BLDG.

STA.37+53.6 ℄ CROSSES FENCE

STA.37+87.70 RT.20.2 INTERSECTION SHELL RD.

STA.37+96.5 RT.6.4 INTERSECTION SHELL RD.

STA.38+10.6 RT.21.4 GUARD POST
STA.38+10.6 RT.22.4 COR.OF VAULT

STA.38+21.5 RT. 22.3 COR.OF VAULT
STA.38+22.4 RT.20.7 GUARD POST
STA.38+23.4 RT.64.9 BLDG.CORNER

STA.38+33.2 RT.50.3 GUARD POST
STA.38+34.5 RT.50.3 COR.OF ELEC. VAULT

STA.38+48.0 RT.5.5 S&WB POWER

STA.38+55.2 RT.16.5 GUARD POST
STA.38+57.4 RT.50.10 COR.OF VAULT
STA.38+60.1 ORT.21.4 COR.OF VAULT
STA.38+74.5 RT.20.8 COR.OF VAULT
STA.38+78.7 RT.16.3 GUARD POST

STA.38+95.2 RT.14.7/63.8 EDGE
SHELL RD./BLDG. CORNER

STA.39+13.0 RT.20.7 SHELL RD.
STA.39+16.5 RT.20.7 GUARD POST
STA.39+17.0 ORT.20.10 CORNER OF CONC.

STA.39+54.2 RT.20.7 CORNER OF CONC.
STA.39+65.0 RT.19.6 GUARD POST

STA.39+78.2 RT. 31.0 DRAIN INLET

STA.41+78.2 RT. 34.4 FENCE COR.
STA.41+93 RT. 18.4 SHELL WIDENS

STA.42+91.4 RT.15.0 COR.OF CONC.
STA.42+94.2 RT.11.9 GUARD POST
STA.42+96.5 RT.18.0 28"ø W/FLANGE & 2 VALVE

EXISTING 60" RAW WATER LINE

STA.43+04.4 RT 11.7 GUARD POST.
STA.43+07.4 RT.15.0 COR.OF CONC.

STA.43+17.4 RT.20.0 2" CONDUIT

STA.43+24.4 RT.40.0 OLD BROKEN CURB.
STA.43+27.3 RT.43.0 ℄ CATCH BASIN

PLAN
SCALE: 1"= 20'

(SEE DRAWING M-19)
MATCH LINE STA. 37+00

℄ EL. 25.0

EXISTING
ELECTRICAL
DUCT BANK

@ STA. 38+25.0

STA. 40+10 ISOLATION VALVE BOX

BASELINE PROFILE

MIN. 3' COVER

EXISTING ELECTRICAL
DUCT BANK

@ STA. 42+78

MATCH LINE STA. 43+03
(SEE DRAWING M-21)

EXISTING 54"
RAW WATER LINE

EXISTING
DUCT BANK

24" TO 'L' BASIN TIE IN
℄ EL. 20.5
SLOPE DOWN TO
℄ EL. 17.00 AT 48" TIE IN

24" RECYCLE LINE
TO 'G' BASINS
℄ EL. 16.50 SLOPE
UP TO EL. 19.00

℄ EL. 16.4

587 LINEAR FEET 24" CLASS 53 RESTRAINED JOINT DUCTILE IRON PIPE

RECORD DRAWING
These record drawings have been prepared based on information provided by others. The Engineer has not verified the accuracy of such information and shall not be responsible for any errors or omissions which may be incorporated herein as a result.

STATE OF LOUISIANA
RONALD M. CASS
REG. No. 23376
REGISTERED
PROFESSIONAL ENGINEER
IN
CIVIL ENGINEERING
3/24/91

SCALE: HORIZ. 1"= 20'
VERT. 1"= 4'

REV.	DATE	DESCRIPTION	BY
1	11-93	RECORD DRAWING REVISION	

SEWERAGE AND WATER BOARD
OF NEW ORLEANS

CARROLLTON FILTER BACKWASH RECYCLE FACILITY

CONTRACT NO. 1172

M-20

DR. S.G.
TRC. —
CK. R.C.
AP. R.C.
SCALE H 1"= 20'-0"
V 1"= 4'-0"
DATE 1/15/91

J. Joseph Sullivan
GENERAL SUPERINTENDENT

DWG. No. 11685-W-58

SET NO.

SHEET NO. 31 OF 58

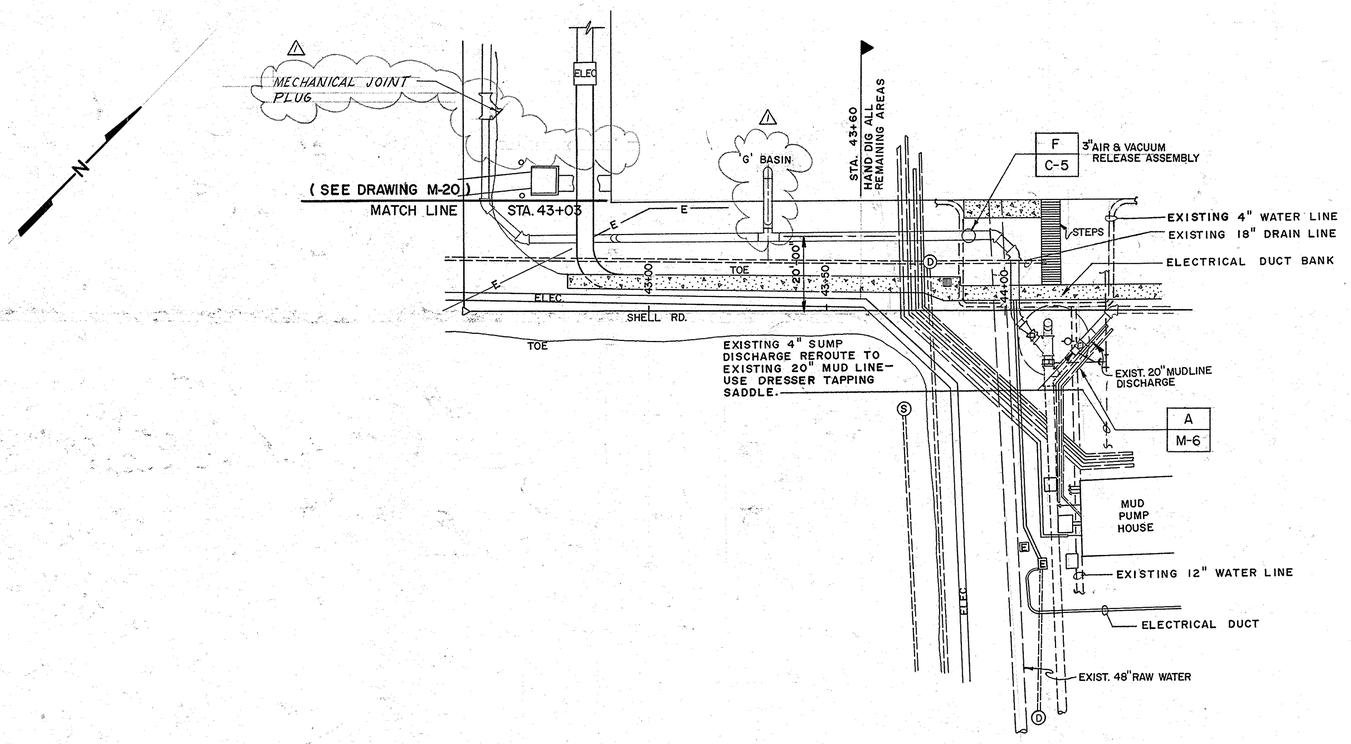

PLAN

SCALE: 1" = 20'-0"

HAND DIG ALL AREAS BEYOND STATION 43+60 TO AVOID DAMAGE TO EXISTING UTILITIES. VERIFY EXISTING LINE SIZE PRIOR TO CUT IN. INTERRUPTION OF EXISTING SERVICE WILL ONLY BE ALLOWED BY S&WB PESONNELL WITH SUFFICIENT PRIOR NOTICE, LINE OUTAGE SHALL NOT EXTEND BEYOND 4 HOURS.

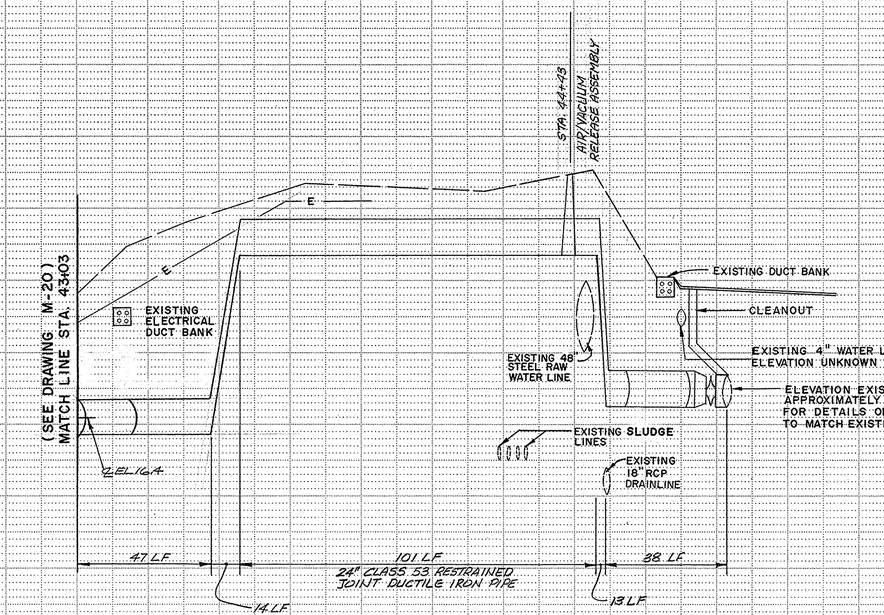

SCALE: HORIZ. 1" = 20'
VERT. 1" = 4'

RECORD DRAWING

These record drawings have been prepared based on information provided by others. The Engineer has not verified the accuracy of such information and shall not be responsible for any errors or omissions which may be incorporated herein as a result.

STATE OF LOUISIANA
RONALD M. CASS
REG. No. 23376
REGISTERED PROFESSIONAL ENGINEER IN CIVIL ENGINEERING
2/24/91

REV	DATE	DESCRIPTION	BY
1	11-93	RECORD DRAWING REVISION	

SEWERAGE AND WATER BOARD OF NEW ORLEANS

CARROLLTON FILTER BACKWASH RECYCLE FACILITY

CONTRACT NO. 1172

M-21

DR.	S.G.
TRC.	–
CK.	R.C.
AP.	R.C.
SCALE	H 1" = 20' V 1" = 4'
DATE	1/15/91

GENERAL SUPERINTENDENT

DWG. No. 11685-W-58

SET NO.

SHEET NO. 32 OF 58

SEWERAGE AND WATER BOARD OF NEW ORLEANS

FOR THE CONSTRUCTION OF

CONTRACT NO. 1369

HMGP EMERGENCY FUEL STORAGE
RETROFIT POWER PLANT
MAIN WATER PURIFICATION PLANT POWER COMPLEX

VICINITY MAP

NOT TO SCALE

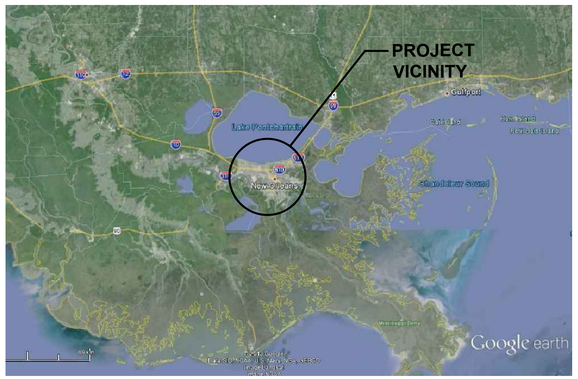

LOCATION MAP

NOT TO SCALE

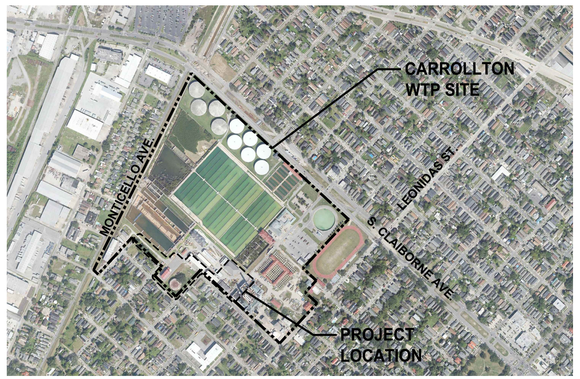

DRAWING INDEX

SHEET NO.	AEC NO.	GENERAL
1	GA–01	COVER, VICINITY MAP, LOCATION MAP, AND DRAWING INDEX
2	GA–02	GENERAL NOTES, LEGEND, AND ABBREVIATIONS
3	GA–03	CARROLLTON WTP OVERALL SITE PLAN
		CIVIL
4	CA–01	EXISTING SITE PLAN AND CIVIL NOTES
5	CA–02	FUEL STORAGE TANK AREA DEMOLITION PLAN
6	CA–03	DIESEL PUMP ROOM / DAY TANK AREA DEMOLITION PLAN
7	CA–04	EXISTING FUEL OIL PIPING PLAN
8	CA–05	EXISTING FUEL OIL PIPING SECTION / JACK AND BORE
9	CA–06	FUEL STORAGE TANK AREA ENLARGED SITE PLAN
10	CA–07	DIESEL PUMP ROOM / DAY TANK AREA ENLARGED SITE, YARD PIPING & GRADING PLAN
11	CA–08	FUEL STORAGE TANK AREA SITE GRADING PLAN AND YARD PIPING PLAN
12	CA–09	FIRE SUPPRESSION AND SUMP DETAILS
13	CA–10	SUMP DETAILS
14	CZ–01	CIVIL DETAILS
15	CZ–02	CIVIL DETAILS
		STRUCTURAL
16	SA–01	STRUCTURAL GENERAL NOTES
17	SA–02	FIRE SUPPRESSION AND WALL PENETRATIONS
18	SB–01	FUEL STORAGE TANK AREA SLOPING PLAN
19	SB–02	FUEL STORAGE TANK AREA PLAN
20	SB–03	FUEL STORAGE TANK AREA (TK–001) FOUNDATION PLAN
21	SB–04	FUEL STORAGE TANK AREA (TK–002) FOUNDATION PLAN
22	SB–05	FUEL STORAGE TANK AREA (TK–001) POST TENSION PLAN
23	SB–06	FUEL STORAGE TANK AREA (TK–002) POST TENSION PLAN
24	SB–07	FUEL STORAGE TANK AREA SECTIONS
25	SB–08	FUEL STORAGE TANK AREA SECTIONS AND DETAILS
26	SB–09	FUEL STORAGE TANK AREA STAIR DETAILS
27	SB–10	FUEL STORAGE TANK AREA CATWALK/STAIR/DETAILS
28	SB–11	FUEL STORAGE TANK AREA FUEL POLISHER PLATFORM
29	SC–02	DAY TANK (TK–003) PLAN AND SECTIONS
30	SC–03	DAY TANK (TK–003) FOUNDATION/PILE PLAN AND SECTIONS
31	SC–04	DAY TANK (TK–003) POST TENSION PLAN AND SECTIONS
		MECHANICAL
32	MA–01	MECHANICAL SYMBOLOGY AND LEGEND
33	MB–01	FUEL STORAGE TANK CONTAINMENT GENERAL ARRANGEMENT PLAN
34	MB–02	FUEL STORAGE TANK (TK–001) CONTAINMENT PLAN
35	MB–03	FUEL STORAGE TANK (TK–002) CONTAINMENT PLAN
36	MB–04	FUEL STORAGE TANK CONTAINMENT SECTIONS AND DETAILS
37	MB–05	FUEL STORAGE TANK (TK–001) NOZZLE & DESIGN DATA
38	MB–06	FUEL STORAGE TANK (TK–002) NOZZLE & DESIGN DATA
39	MC–01	DAY TANK (TK–003) PLAN, ELEVATION AND SECTION
40	MD–01	DIESEL PUMP ROOM – PIPE PENETRATIONS VALVE REPLACEMENT
41	MZ–01	MECHANICAL DETAILS
42	MZ–02	MECHANICAL DETAILS
		ELECTRICAL
43	EA–01	ELECTRICAL NOTES AND SYMBOLS SCHEDULES
44	EA–02	FUEL STORAGE TANKS ONE LINE DIAGRAM
45	EA–03	MCC–3 & G5 ONE LINE DIAGRAMS & EQUIPMENT LAYOUT
46	EA–04	OVERALL ELECTRICAL PLAN
47	EB–01	OIL WATER SEPARATOR SCHEMATIC & LOCAL CONTROL PANEL
48	EB–02	FUEL FORWARDING PUMPS & SUMP PUMP SCHEMATICS
49	EB–03	FUEL STORAGE TANKS SCHEMATIC
50	EB–04	FIRE ALARM CONTROL PANEL SYSTEM CONFIG. & WIRING DIAGRAM
51	EB–05	FUEL STORAGE & DAY TANKS GROUNDING PLANS
52	EB–06	FUEL STORAGE TANKS SITE PLAN LIGHTING & RECEPTACLES
53	EB–07	FUEL POLISHER PLATFORM LAYOUT FOAM TANK BOOSTER PUMP
54	EC–01	DAY TANK SCHEMATIC & LOCAL CONTROL PANEL
55	EC–02	DAY TANK SCHEMATIC & LOCAL CONTROL PANEL
56	EC–03	DAY TANK ELECTRICAL SITE PLAN
57	EC–04	BOILER HOUSE JB#1 (BOP–JB–001) WIRING DIAGRAM
58	EC–05	BOILER HOUSE JB#1 (BOP–JB–001) INTERCONNECT DIAGRAM
59	EZ–01	FUEL STORAGE TANKS / DAY TANK AREA CLASSIFICATION
60	EZ–02	CONDUIT & CABLE SCHEDULE
61	EZ–03	PANEL SCHEDULE & LIGHT FIXTURE SCHEDULE
62	EZ–04	ELECTRICAL DETAILS – SHEET 1
63	EZ–05	ELECTRICAL DETAILS – SHEET 2
64	EZ–06	ELECTRICAL DETAILS – SHEET 3
65	EZ–07	ELECTRICAL DETAILS – SHEET 4
66	EZ–08	ELECTRICAL DETAILS – SHEET 5
		INSTRUMENTATION
67	IA–01	PIPING INSTRUMENTATION DIAGRAM – SYMBOLOGY AND LEGEND
68	IB–01	FUEL STORAGE (TK–001 & TK–002) P&ID
69	IB–02	FIRE SUPPRESSION (TK–005) P&ID
70	IB–03	OIL–WATER SEPARATOR (TK–004) P&ID
71	IB–04	CN1352 PIPING SCHEMATIC – DIESEL TRANSFER PUMPS AND DRAIN SUMP
72	IC–01	DAY TANK (TK–003) P&ID

A

THESE COMPILED ENGINEERING AS–BUILT RECORD DRAWINGS ARE A COMPILATION OF A COPY OF THE ORIGINAL SEALED ENGINEERING DESIGN DRAWINGS FOR THIS PROJECT, MODIFIED BY ADDENDA, CHANGE ORDERS AND INFORMATION FURNISHED BY THE CONTRACTOR. THE INFORMATION SHOWN ON THESE COMPILED ENGINEERING AS–BUILT RECORD DRAWINGS THAT WAS PROVIDED BY THE CONTRACTOR OR OTHERS NOT ASSOCIATED WITH ME CANNOT BE VERIFIED FOR ACCURACY OR COMPLETENESS. MY COMPILATION OF THIS INFORMATION DOES NOT RELIEVE THE CONTRACTOR OF RESPONSIBILITY FOR ERRORS RESULTANT TO INCORRECT, INCOMPLETE OR OMITTED DATA ON THE CONTRACTOR'S AS–BUILT RECORD DRAWINGS – NOR DOES IT RELIEVE THE CONTRACTOR OF RESPONSIBILITY FOR NON–CONFORMANCE WITH THE ORIGINAL CONTRACT DOCUMENTS. THE ORIGINAL SEALED ENGINEERING DRAWINGS ARE ON FILE IN THE OFFICES OF THE SEWERAGE AND WATER BOARD.

REV.	DATE	DESCRIPTION	BY
A	10–25–19	AS–BUILT MARKUPS	LHN

SEWERAGE AND WATER BOARD OF NEW ORLEANS

CONTRACT No. 1369

HMGP EMERGENCY FUEL STORAGE
RETROFIT POWER PLANT
MAIN WATER PURIFICATION PLANT POWER COMPLEX

COVER, VICINITY MAP, LOCATION MAP AND DRAWING INDEX

THIS DOCUMENT ORIGINALLY ISSUED AND SEALED BY LISBETH HABANS NAGRATH, LICENCE No. 36792 ON 2-6-15. THIS DOCUMENT SHOULD NOT BE CONSIDERED A CERTIFIED DOCUMENT.

Trigon
Quality ▲ Commitment ▲ Client Service

TRIGON DWG. NO. GA-01

TRIGON ASSOCIATES, LLC
1515 POYDRAS STREET
SUITE 2200
NEW ORLEANS, LA 70112
TEL: 504-585-5767

trigonassociates.com

DR:	SJ CLARK
CK:	RA CASSANOVA
AP:	LH NAGRATH
LAST EDIT:	
SCALE:	NOT TO SCALE
DATE:	JANUARY 28, 2015

GENERAL SUPERINTENDENT

DWG. No. 12098-W8

SET NO: SHEET NO: 1 OF 72

GENERAL NOTES:

1. CONTRACTOR TO CONTACT THE SEWERAGE AND WATER BOARD (S&WB) PRIOR TO THE COMMENCEMENT OF ANY ACTIVITIES THAT MAY SUSPEND OPERATIONS.
2. COORDINATE WORK ACTIVITIES, INCLUDING ACCESS WITH THE S&WB AND OTHER CONTRACTORS WORKING IN THE AREA, AS REQUIRED BY SECTION 01 31 13 PROJECT COORDINATION.
3. THE CONTRACTOR IS RESPONSIBLE FOR REPAIRING ALL DAMAGE TO ADJACENT CONSTRUCTION AREAS AT NO ADDITIONAL COST TO THE S&WB AND SHALL BE LIABLE FOR ANY DAMAGE CAUSED BY FAILURE TO COMPLY WITH THESE INSTRUCTIONS.
4. THE CONTRACTOR IS RESPONSIBLE FOR DAMAGE TO EXISTING UTILITIES WHICH OCCUR BY THEIR FAULT DURING CONSTRUCTION AND SHALL IMMEDIATELY REPORT DAMAGE TO THE S&WB. ALL REPAIR COSTS SHALL BE BORNE BY THE CONTRACTOR.
5. THE CONTRACTOR SHALL NOTIFY THE S&WB IF THEY PLAN TO WORK ON AN S&WB HOLIDAY OR WEEKEND DAY. THE S&WB HAS THE FINAL AUTHORIZATION ON WORK PERFORMED NOT ON REGULAR WORK DAYS.
6. ALL WORK SHALL CONFORM TO THE CITY OF NEW ORLEANS DEPARTMENT OF PUBLIC WORKS, THE SEWERAGE AND WATER BOARD OF NEW ORLEANS, OCCUPATIONAL SAFETY AND HEALTH ADMINISTRATION (OSHA) STANDARDS AND STATE AND FEDERAL REGULATIONS.
7. THE CONTRACTOR SHALL FURNISH ALL LABOR, SUPERVISION, MATERIALS, AND EQUIPMENT REQUIRED FOR THE WORK DETAILED IN THE CONTRACT AND AS REQUIRED BY THESE DRAWINGS AND SPECIFICATIONS.
8. ALL WORKMANSHIP AND MATERIALS SHALL CONFORM TO THE SPECIFICATIONS OF THE SEWERAGE AND WATER BOARD EXCEPT AS NOTED.
9. DIMENSIONS AND/OR ELEVATIONS MARKED "NTS" ARE NOT SHOWN TO SCALE. DRAWINGS ARE GENERALLY TO SCALE BUT SHOULD NOT BE SCALED.
10. NOISE CONTROL – THE CONTRACTOR SHALL TAKE REASONABLE MEASURES TO AVOID UNNECESSARY NOISE APPROPRIATE FOR THE AMBIENT SOUND LEVELS IN THE AREA DURING WORK HOURS. ALL CONSTRUCTION MACHINERY AND VEHICLES SHALL BE EQUIPPED WITH PRACTICAL SOUND MUFFLING DEVICES AND OPERATED IN A MANNER TO CAUSE THE LEAST NOISE CONSISTENT WITH EFFICIENT PERFORMANCE OF THE WORK.
11. ALL UTILITIES TO REMAIN UNLESS NOTED OTHERWISE. THE LOCATION OF THE EXISTING UTILITIES SHOWN ARE BASED ON EXISTING RECORDS AND WHERE POSSIBLE MEASUREMENTS TAKEN IN THE FIELD. THE INFORMATION IS NOT TO BE RELIED ON AS BEING EXACT OR COMPLETE.
12. THE CONTRACTOR SHALL NOTIFY THE S&WB REPRESENTATIVE OF ANY UTILITIES FOUND ON THE SITE WHICH WERE NOT IDENTIFIED ON THE SURVEY PRIOR TO DEMOLITION.
13. SILT FENCES SHALL BE INSTALLED AROUND THE PERIMETER OF THE CONSTRUCTION AREA PRIOR TO ANY OTHER CONSTRUCTION IN ACCORDANCE WITH SECTION 01 57 13 TEMPORARY EROSION AND SEDIMENT CONTROL.
14. AT POINTS OF TIE–IN TO THE EXISTING SYSTEM, THE NEW PIPE MATERIAL SHOULD MATCH EXISTING PIPING IN SIZE AND SCHEDULE OR BE INSTALLED AS NOTED ON THE PIPING DRAWINGS.
15. THE CONTRACTOR WILL BE REQUIRED TO REPAIR, AT HIS OWN EXPENSE AND IN AN APPROVED MANNER, ALL DEFECTS IN WORKMANSHIP OR MATERIAL DISCLOSED BY INSPECTIONS PRIOR TO OBTAINING FINAL ACCEPTANCE. THE CONTRACTOR SHALL ALSO BEAR ALL COSTS ASSOCIATED WITH THE RE–TESTING, INCLUDING ANY COSTS INCURRED BY THE S&WB.
16. ALL REQUIRED DEMOLITION WORK SHALL BE INCLUDED IN THE BASE BID PACKAGE SUBMITTED BY THE CONTRACTOR.
17. PRIOR TO ANY DEMOLITION, CLEARING, OR EXCAVATION, THE CONTRACTOR SHALL LOCATE ALL UNDERGROUND UTILITIES BY CALLING LOUISIANA ONE CALL AT 811 OR 1–800–272–3020 AND THROUGH COORDINATION WITH THE S&WB.
18. DO NOT ALLOW MATERIAL AND DEBRIS GENERATED BY DEMOLITION ACTIVITIES TO ACCUMULATE ON THE JOB SITE. REMOVE DAILY AND DISPOSE OF IN A LEGAL MANNER. NO ONSITE SALE OF REMOVED ITEMS IS PERMITTED.
19. THE CONTRACTOR MUST TAKE ALL NECESSARY PRECAUTIONS TO ENSURE THE SAFETY OF THE PUBLIC AND/OR WORKERS ON THE SITE, AND TO PREVENT ACCIDENTS OR INJURY TO ANY PERSON ON, ABOUT OR ADJACENT TO THE WORK AREA.
20. THE SITE IS IN ZONE A1. ELEVATION 1.50 FEET, AS PER FLOOD INSURANCE RATE MAP COMMUNITY– PANEL NUMBER 255203 0160 E. EFFECTIVE DATE MARCH 1, 1984.
21. ANY WORK, CONSTRUCTION MATERIALS, FITTINGS, AND APPURTENANCES REQUIRED BY THE PLANS AND SPECIFICATIONS (INCLUDING FITTINGS AND MATERIALS AT ALL TIE–IN POINTS, TEMPORARY WORK, AND MATERIALS NEEDED TO ACCOMPLISH THE PROPOSED IMPROVEMENTS) AND NOT OTHERWISE IDENTIFIED IN THE PLANS, SHALL BE DEEMED INCIDENTAL TO CONSTRUCTION AND SHALL BE PERFORMED, SUPPLIED, AND INSTALLED AT NO ADDITIONAL COST TO THE OWNER.
22. SHOULD FIELD LOCATION OF EXISTING UTILITIES REQUIRE ADJUSTMENT TO PROPOSED UTILITY ALIGNMENT, CONTRACTOR SHALL PERFORM ADJUSTMENTS AS REQUIRED.
23. THE CONTRACTOR SHALL PROVIDE CONSTRUCTION AS BUILT DRAWINGS UPON COMPLETION.
24. SEE SECTION 05 12 00 FOR AWS SYMBOL LEGEND.

SITE ACCESS NOTES:

1. CONTRACTORS WILL PRESENT A GOVERNMENT ISSUED (STATE OR FEDERAL) ID. A PHOTOCOPY WILL BE MADE AND THE ID RETURNED TO THE INDIVIDUAL. THE FOLLOWING INFORMATION WILL BE PROVIDED AT THE TIME OF THE PHOTOCOPY: COMPANY NAME, SUPERVISOR'S NAME AND DAYTIME PHONE NUMBER, DATES (OR TIME FRAME) OF EXPECTED VISITS TO THE PLANT AND NAME OF S&WB EMPLOYEE SUPERVISING THE CONTRACT.
2. THE NAME WILL BE ADDED TO THE CONTRACTOR'S ENTRY LIST THAT IS AT EACH ENTRY GATE. WHEN THE CONTRACTOR ENTERS HE WILL BE REQUIRED TO SHOW HIS GOVERNMENT ISSUED I.D. WHICH WILL BE COMPARED WITH THE LIST. HIS ENTRY INTO THE PLANT WILL BE NOTED. ALL CONTRACTORS WILL DISPLAY A CONTRACTOR ISSUED ID AT ALL TIMES WHEN IN THE PLANT UNLESS IT IS UNSAFE TO DO SO.
3. IF THE CONTRACTOR NEEDS TO HAVE A VEHICLE ENTER THE PLANT ON A REGULAR BASIS THEY WILL NEED TO CONTACT TODD HATHEWAY FOR ISSUANCE OF THE VEHICLE PASS. ONLY THOSE VEHICLES THAT NEED TO BE USED TO BRING IN MATERIALS AND TOOLS ON A DAILY BASIS WILL BE ISSUED A VEHICLE PASS.
4. ALL CONTRACTOR EMPLOYEES SHALL PARK IN THE S&WB EMPLOYEE PARKING LOT (THE PARKING LOT TO THE LEFT WHEN ENTERING THE PLANT FROM CLAIBORNE AVE) AND ENTER THROUGH THE EMPLOYEE GATE.
5. IF ANY CONTRACTOR EMPLOYEE IS TERMINATED OR REASSIGNED, THE CONTRACTOR SHALL INFORM THE S&WB IMMEDIATELY TO REMOVE THE EMPLOYEE'S NAME FROM THE GATE LIST.
6. CONSTRUCTION ACCESS THROUGH THE GATE AT GENERAL OGDEN STREET AND SPRUCE STREET WILL BE PERMITTED. PROVIDE 72 HOURS NOTICE TO TODD HATHEWAY IF CONTRACTOR INTENDS FOR EMPLOYEES TO USE THESE GATES. GATE MUST BE STAFFED WITH SECURITY PERSONNEL WHEN IN USE.

SYMBOLOGY LEGEND

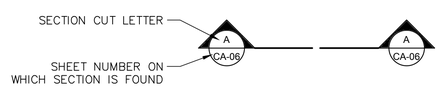

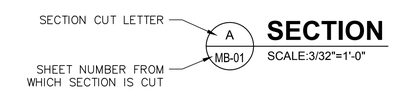

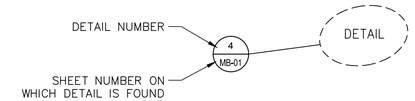

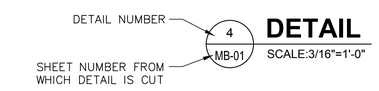

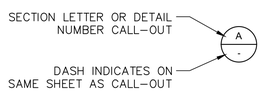

DRAWING NUMBERING SYSTEM

SEQUENTIAL SHEET NUMBER

DISCIPLINE
- G–GENERAL
- C–CIVIL
- S–STRUCTURAL
- M–MECHANICAL
- E–ELECTRICAL
- I–INSTRUMENTATION

M Z - 01

DENOTES AREA OR STANDARD DETAIL SHEETS
- A – GENERAL DISCIPLINE SHEETS
- B – EMERGENCY FUEL STORAGE TANK AREA
- C – DAY TANK / BOILER ROOM BASEMENT AREA
- Z – STANDARD DETAIL SHEETS

DEPICTED IS STANDARD MECHANICAL DETAIL SHEET NO 1

PROJECT ABBREVIATIONS:

#	NUMBER
&	AND
@	AT
%	PERCENT
℄	CENTER LINE
P̄L	PROPERTY LINE
'	FOOT; FEET
"	INCHES
A	AMPERE, AMPS
ADAAG	AMERICANS WITH DISABILITIES ACT ACCESSIBILITY GUIDELINES
ACI	AMERICAN CONCRETE INSTITUTE
AG	ABOVE GROUND
AWS	AMERICAN WELDING SOCIETY
BM	BENCHMARK
BOP	BALANCE OF PLANT
BOT	BOTTOM; BOTTOM OF TANK
BV	BALL VALVE
BYND	BEYOND
CC	CENTER TO CENTER
CFO	CLEAN FUEL OIL
CFPS	CERTIFIED FIRE PROTECTION SPECIALIST
CFR	CODE OF FEDERAL REGULATIONS
CL	CENTER LINE
CLR	CLEAR
CONC	CONCRETE
CONT	CONTINUOUS
CPLR	COUPLER
CPT	CONTROL POWER TRANSFORMER
CS	CARBON STEEL
CV	CHECK VALVE
CY	CUBIC YARDS
DI	DUCTILE IRON, DRAINAGE INLET
DISC	DISCONNECT
DV	DELUGE VALVE
DWG	DRAWING
EL	ELEVATION
ELEV	ELEVATION
EXT	EXTERIOR
EXT'G	EXISTING
FACP	FIRE ALARM CONTROL PANEL
FC	FOAM CONCENTRATE, FLEXIBLE CONNECTION
FFE	FINISH FLOOR ELEVATION
FLG	FLANGE
FLH	FLEXIBLE HOSE
FO	FUEL OIL
FS	FOAM SOLUTION
GALV	GALVANIZED
GPM	GALLONS PER MINUTE
GV	GATE VALVE
H	HORIZONTAL
HMGP	HAZARD MITIGATION GRANT PROGRAM
HO	HAND/OFF
HOA	HAND/OFF/AUTOMATIC
HP	HORSE POWER
HS	HAND SWITCH
HSS	HIGH STRENGTH STEEL
HWY	HIGHWAY
INV	INVERT
JB	JUNCTION BOX
KSI	KIPS PER SQUARE INCH
LAH	LEVEL ALARM HIGH
LAHH	LEVEL ALARM HIGH HIGH
LALL	LEVEL ALARM LOW LOW
LAX	LEAK ALARM
LCP	LOCAL CONTROL PANEL
LG	LONG
LG	LEVEL GAUGE
LI	LEVEL INDICATOR
LIT	LEVEL INDICATOR TRANSMIT
LPS	LIGHTNING PROTECTION SYSTEM
LSH	LEVEL SWITCH HIGH
LSHH	LEVEL SWITCH HIGH HIGH
LSLL	LEVEL SWITCH LOW LOW
LSX	LEAK SWITCH
MAX	MAXIMUM
MCC	MOTOR CONTROL CENTER
MD	MUD DISCHARGE
MIN	MINIMUM
MJ	MECHANICAL JOINT
NC	NORMALLY CLOSED
NO	NORMALLY OPEN, NUMBER
NTS	NOT TO SCALE
NV	NEEDLE VALVE
OC	ON CENTER
OE	OVERHEAD ELECTRIC
OSHA	OCCUPATIONAL HEALTH AND SAFETY STANDARDS
OW	OILY WATER
OWS	OIL–WATER SEPARATOR
P	PUMP
PCCP	PORTLAND CEMENT CONCRETE PAVEMENT
PE	POLYETHYLENE
PFO	POLISHED FUEL OIL
PL	PROPERTY LINE
PLC	PROGRAMMABLE LOGIC CONTROLLER
PSF	POUNDS PER SQUARE FOOT
PSI	POUNDS PER SQUARE INCH
PT	POST TENSION
PTI	POST TENSION INSTITUTE
PVC	POLYVINYL CHLORIDE
PW	POTABLE WATER
R	RADIUS
R/W	RIGHT–OF–WAY
RA	RELEASING AGENT
RED	REDUCER
RW	RAW WATER
SCH	SCHEDULE
SCP	STEEL CASING PIPE
SD	STORM DRAIN
SF	SAFETY FACTOR, SQUARE FEET
SIM	SIMILAR
SL	SLUDGE LINE
SS	SANITARY SEWER, STAINLESS STEEL
SWBNO	SEWERAGE AND WATER BOARD OF NEW ORLEANS
S&WB	SEWERAGE AND WATER BOARD OF NEW ORLEANS
T	TREAD(S), TELEPHONE, TONS
TK	TANK
TOC	TOP OF CURB, TOP OF CONCRETE
TOG	TOP OF GRATING
TOS	TOP OF SLAB
TP	TEST POINT
TW	TREATED WATER
TYP	TYPICAL
UG	UNDERGROUND
UGE	UNDERGROUND ELECTRIC
V	VOLTS/VERTICAL
VIF	VERIFY IN FIELD
VFD	VARIABLE FREQUENCY DRIVE
W	WEST, WIDE, WATTS
W/	WITH
WF	WIDE FLANGE
WL	WATERLINE
WW	WELDED WIRE
WWF	WELDED WIRE FABRIC
YC	EVENT CONTROL
YR	EVENT RECORD

REV.	DATE	DESCRIPTION	BY
A	10–25–19	AS–BUILT MARKUPS	LHN

A AS–BUILT REVISIONS NOT PROVIDED FOR THIS SHEET BY THE CONTRACTOR.

THIS DOCUMENT ORIGINALLY ISSUED AND SEALED BY LISBETH HABANS NAGRATH, LICENCE No. 36792 ON 2-6-15. THIS DOCUMENT SHOULD NOT BE CONSIDERED A CERTIFIED DOCUMENT.

Trigon
Quality ▲ Commitment ▲ Client Service
TRIGON DWG. NO. GA-02

TRIGON ASSOCIATES, LLC
1515 POYDRAS STREET
SUITE 2200
NEW ORLEANS, LA 70112
TEL: 504-585-5767
trigonassociates.com

SEWERAGE AND WATER BOARD OF NEW ORLEANS

CONTRACT No. 1369

HMGP EMERGENCY FUEL STORAGE RETROFIT POWER PLANT
MAIN WATER PURIFICATION PLANT POWER COMPLEX

GENERAL NOTES, LEGEND AND ABBREVIATIONS

DR.	SJ CLARK
CK:	RA CASSANOVA
AP:	LH NAGRATH
LAST EDIT:	
SCALE:	NONE
DATE:	JANUARY 28, 2015

GENERAL SUPERINTENDENT

DWG. No. 12098-W8

SET NO: SHEET NO: 2 OF 72

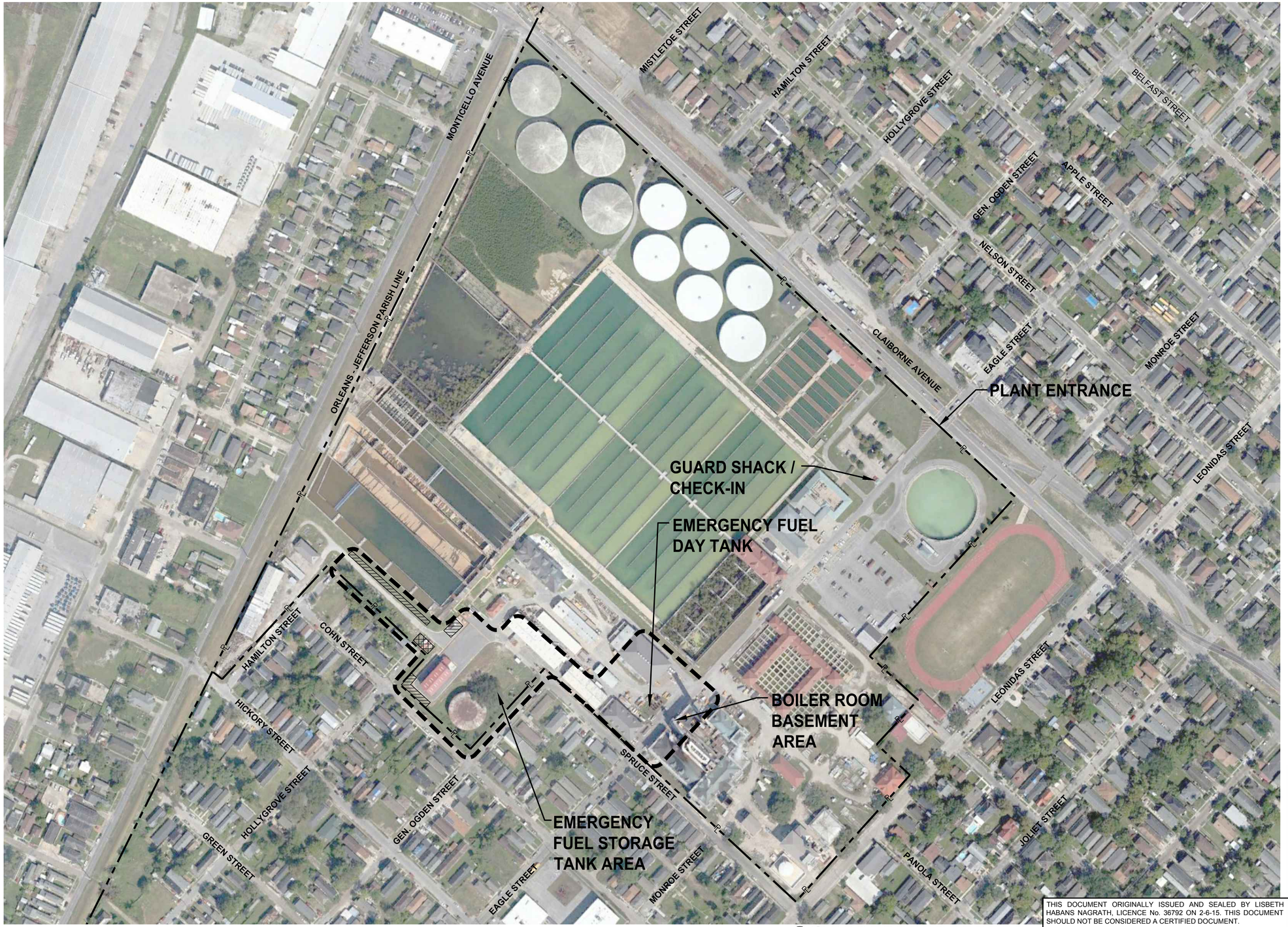

TRUE NORTH

PLANT NORTH

0 150 300

SCALE: 1" = 150'-0"

CONSTRUCTION LEGEND

LAYDOWN AREAS

CONSTRUCTION TRAILER AREA

A RECORD DRAWING INFORMATION NOT PROVIDED FOR THIS SHEET BY THE CONTRACTOR.

THIS DOCUMENT ORIGINALLY ISSUED AND SEALED BY LISBETH HABANS NAGRATH, LICENCE No. 36792 ON 2-6-15. THIS DOCUMENT SHOULD NOT BE CONSIDERED A CERTIFIED DOCUMENT.

Trigon
Quality ▲ Commitment ▲ Client Service

TRIGON DWG. NO. GA-03

TRIGON ASSOCIATES, LLC
1515 POYDRAS STREET
SUITE 2200
NEW ORLEANS, LA 70112
TEL: 504-585-5767
trigonassociates.com

REV.	DATE	DESCRIPTION	BY
A	10-25-19	AS-BUILT MARKUPS	LHN

SEWERAGE AND WATER BOARD OF NEW ORLEANS

CONTRACT No. 1369

HMGP EMERGENCY FUEL STORAGE
RETROFIT POWER PLANT
MAIN WATER PURIFICATION PLANT POWER COMPLEX

CARROLLTON WTP OVERALL SITE PLAN

DR.	SJ CLARK
CK:	RA CASSANOVA
AP:	LH NAGRATH
LAST EDIT:	
SCALE:	AS NOTED
DATE:	JANUARY 28, 2015

GENERAL SUPERINTENDENT

DWG. No. 12098-W8

SET NO: SHEET NO: 3 OF 72

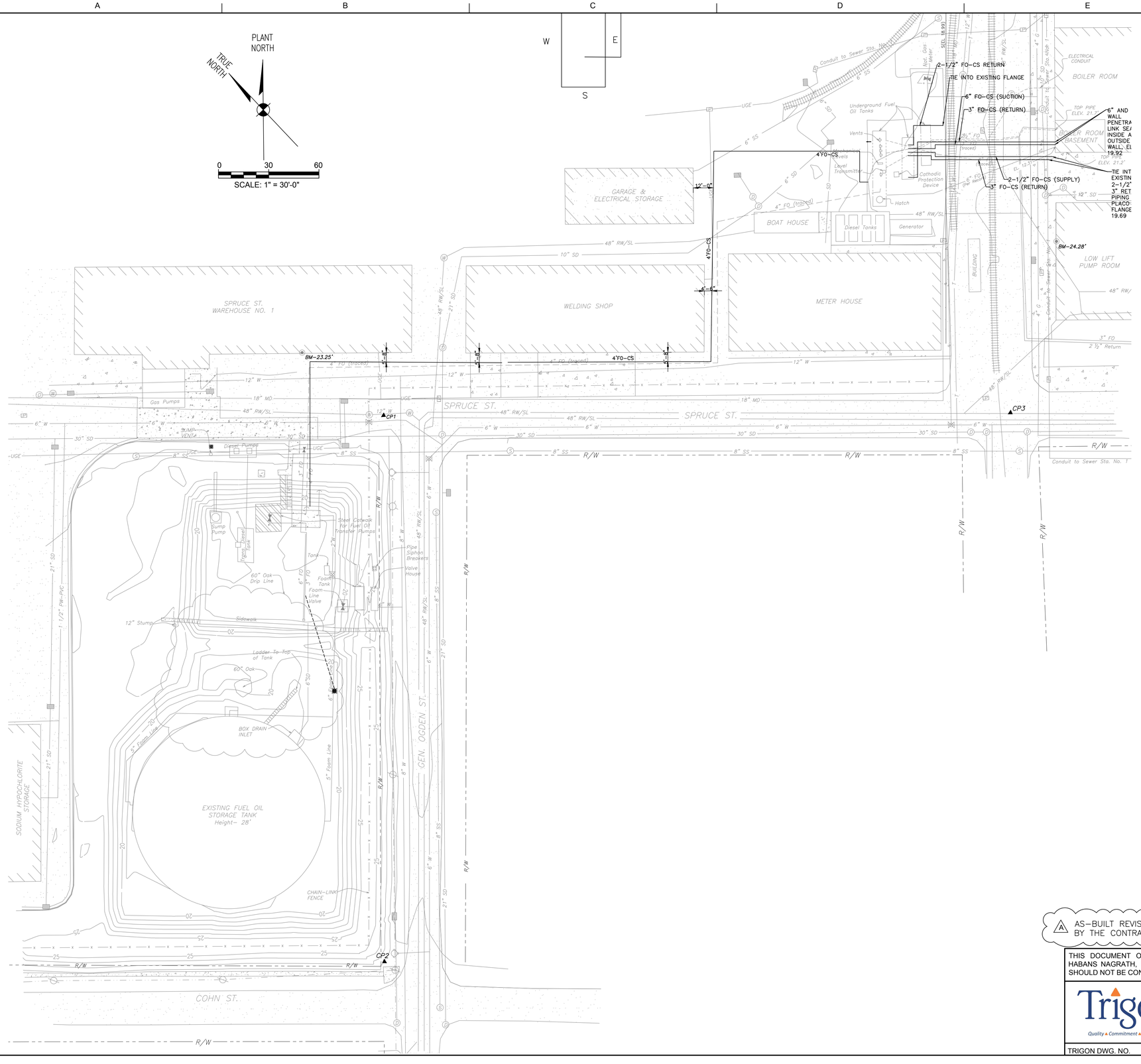

SITE SURVEY PROVIDED BY:

DALE STOCKSTILL & ASSOCIATES, P.A., PROFESSIONAL LAND SURVEYORS, 8054 HWY. 11, CARRIERE, MS 39426, PH:601-798-2326 AND SUBMITTED ON JANUARY 13, 2014.

SURVEYOR'S NOTES:

DATUMS:

THE COORDINATE DATUM USED IN THE DIGITAL VERSION OF THIS DRAWING IS LOUISIANA STATE PLANE COORDINATE SYSTEM, SOUTH ZONE, NAD 83, US SURVEY FEET AS DETERMINED BY STATIC GPS OBSERVATIONS PROCESSED THROUGH NGS'S OPUS SITE [WWW.NGS.NOAA.GOV/OPUS].

THE VERTICAL DATUM FOR THIS DRAWING IS CAIRO DATUM AS DETERMINED BY PLANT BENCHMARKS.

NOTES:

THE POINTS USED IN CREATING THE DIGITAL TERRAIN MODEL (DTM) WERE OBTAINED BY A COMBINATION OF REAL TIME KINEMATIC (RTK) GPS OBSERVATIONS AND TRIGONOMETRIC LEVELING USING A TOTAL STATION AND CONVENTIONAL SURVEYING METHODS.

THIS IS A TOPOGRAPHY SURVEY AND IS NOT INTENDED TO BE USED AS A BOUNDARY SURVEY.

UTILITY QUALITY LEVEL SHOWN ON DRAWING AS PER ASCE 38-02

UNDERGROUND UTILITIES ARE SHOWN AS PER RECORD DRAWINGS. NO PHYSICAL PIPE LOCATIONS WERE DETERMINED EXCEPT AS NOTED.

RIGHT-OF-WAY SOURCE:

THE RIGHT-OF-WAYS SHOWN ON WERE OBTAINED FROM THE CITY OF NEW ORLEANS GIS PARCEL SHAPE FILE DATED JUNE 20, 2014, LOCATED ON CITY WEB SITE [WWW.DATA.NOLA.GOV].

SURVEY CONTROL POINTS

▲ CONTROL POINT #1 (CP1)
MAG NAIL SET
N= 532371.8450
E= 3661746.3440
ELEV.= 21.82' CD
ELEV.= 0.295' NGVD 88
LAT.- 29°57'30.32"
LONG.- 90°07'49.50"

▲ CONTROL POINT #2 (CP2)
5/8" REBAR SET W/CAP
N= 532129.577
E= 3661526.1487
ELEV.= 21.76' CD
ELEV.= 0.312' NGVD 88
LAT.- 29°57'27.95"
LONG.- 90°07'52.03"

▲ CONTROL POINT #3 (CP3)
MAG NAIL SET
N= 532119.4129
E= 3662022.6461
ELEV.= 21.58 CD
LAT.- 29°57'27.95"
LONG.- 90°0746.39"

EXISTING SITE LEGEND

POWER POLE
OVERHEAD POWER LINE
TELEPHONE
LIGHT POLE
SINGLE LIGHT TRAFFIC SIGNAL
DRAIN INLET
6' CHAINLINK FENCE
BENCH MARK
SEWER MANHOLE
DRAINAGE MANHOLE
WATER MANHOLE
WATER METER
FIRE HYDRANT
WATER VALVE
POWER BOX
VALVE
TREE DRIP LINE
UNDERGROUND ELECTRIC
OVERHEAD ELECTRIC
ELEC. TRACED LINE
STORM DRAINAGE
SANITARY SEWER
WATERLINE
RAW WATER / SLUDGE LINE
MUD DISCHARGE
FUEL OIL
RIGHT-OF-WAY
FIN. FLR. ELEV. CONTROL POINT
ASHPALT
CONCRETE

REV.	DATE	DESCRIPTION	BY
A	10-25-19	AS-BUILT MARKUPS	LHN

AS-BUILT REVISIONS NOT PROVIDED FOR THIS SHEET BY THE CONTRACTOR.

THIS DOCUMENT ORIGINALLY ISSUED AND SEALED BY LISBETH HABANS NAGRATH, LICENCE No. 36792 ON 2-6-15. THIS DOCUMENT SHOULD NOT BE CONSIDERED A CERTIFIED DOCUMENT.

Trigon
Quality ▲ Commitment ▲ Client Service

TRIGON DWG. NO. CA-01

TRIGON ASSOCIATES, LLC
1515 POYDRAS STREET
SUITE 2200
NEW ORLEANS, LA 70112
TEL: 504-585-5767

trigonassociates.com

SEWERAGE AND WATER BOARD OF NEW ORLEANS

CONTRACT No. 1369

HMGP EMERGENCY FUEL STORAGE
RETROFIT POWER PLANT
MAIN WATER PURIFICATION PLANT POWER COMPLEX

EXISTING SITE PLAN AND CIVIL NOTES

DR:	SJ CLARK
CK:	RA CASSANOVA
AP:	LH NAGRATH
LAST EDIT:	
SCALE:	1"=30'-0"
DATE:	JANUARY 28, 2015

GENERAL SUPERINTENDENT

DWG. No. 12098-W8

SET NO: SHEET NO: 4 OF 72

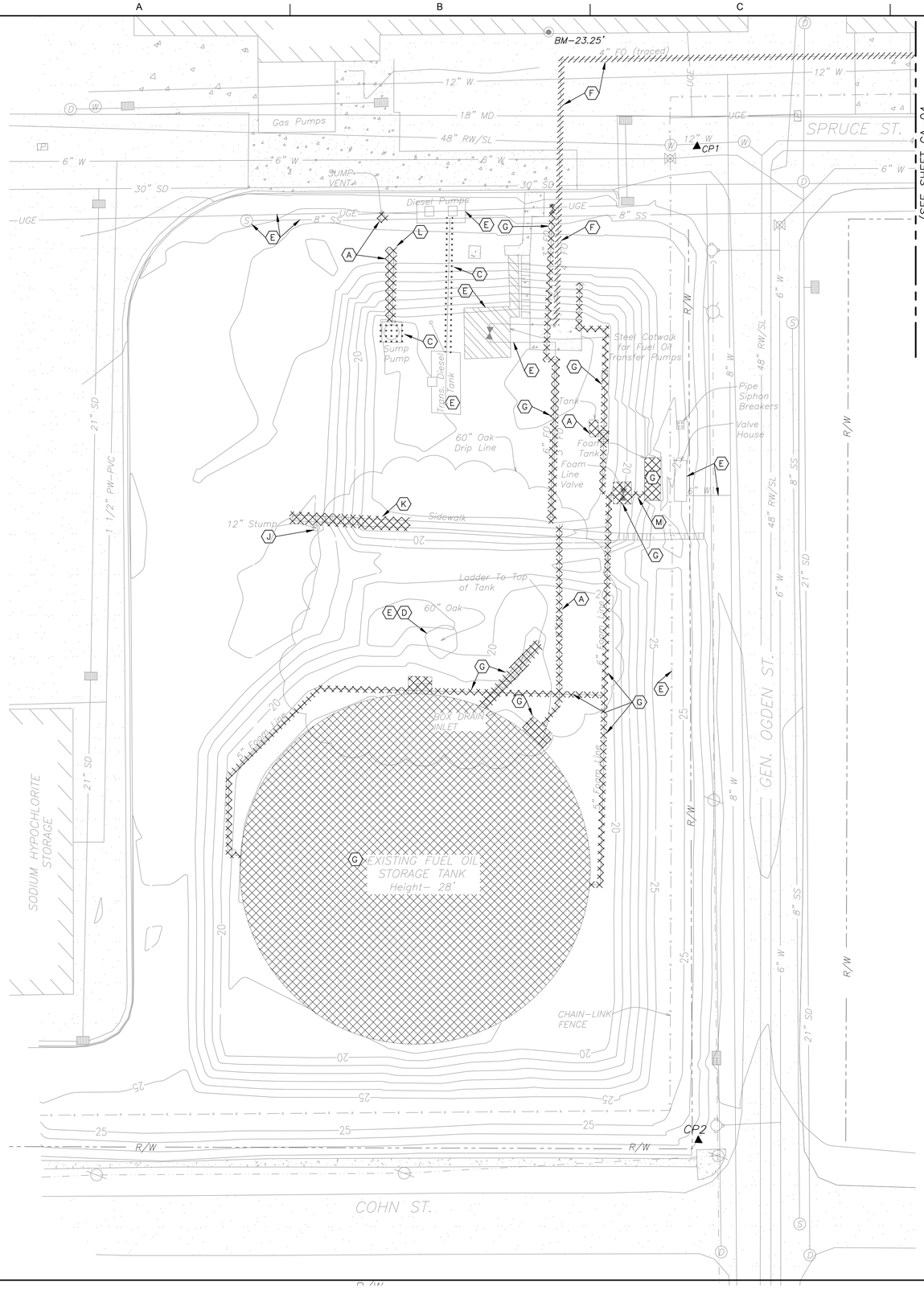

PLANT NORTH

TRUE NORTH

0 20 40

SCALE: 1" = 20'-0"

DEMOLITION LEGEND:

- TO BE REMOVED.
- TO BE RELOCATED.
- TO BE ABANDONED.

SEE SPECIFIC DEMOLITION NOTES FOR DESCRIPTION OF WORK TO BE PERFORMED.

(A) TO BE REMOVED FROM SITE.

(B) NOT USED.

(C) TO BE RELOCATED.

(D) PROVIDE TREE TRIMMING IN ACCORDANCE WITH SPECIFICATION SECTION 31 13 16.

(E) TO BE PROTECTED DURING CONSTRUCTION.

(F) TO BE ABANDONED. FILL WITH FLOWABLE MATERIAL (SAND/CEMENT MIXTURE) AND PLUG AT BOTH ENDS FOLLOWING INSTALLATION OF NEW LINE.

(G) TO BE REMOVED FROM SITE FOLLOWING TRANSFER OF FUEL OIL SERVICE.

(H) (NOT USED)

(I) (NOT USED)

(J) TO BE REMOVED FROM SITE, INCLUDING ROOTS AS REQUIRED FOR PILE DRIVING.

(K) TO BE REMOVED, AS REQUIRED FOR CONTAINMENT AND RE–GRADING.

(L) FIELD VERIFY LOCATION OF EXISTING SUMP DISCHARGE BELOW GRADE. REMOVE TO AVOID CONFLICT WITH NEW WORK. SHOULD EXISTING DRAIN LINE EXTEND BEYOND REQUIRED EXCAVATION, PLUG END.

(M) PROTECT EXISTING 6" WL FOR CONNECTION TO PROPOSED FIRE SUPPRESSION SYSTEM.

DEMOLITION NOTES:

1. SEE SPECIFICATION SECTION 01 31 13 PROJECT COORDINATION FOR CONSTRUCTION SEQUENCING.
2. DEMOLITION WORK SHALL BE IN ACCORDANCE WITH SPECIFICATION SECTION 02 41 00 DEMOLITION. SEE SPECIFICATION SECTION 02 65 00 UNDERGROUND AND ABOVEGROUND STORAGE TANK REMOVAL.
3. CONTRACTOR SHALL DEMOLISH THE EXISTING STEEL FUEL OIL TANK IN ACCORDANCE WITH ALL APPLICABLE LAWS AND REGULATIONS.
4. FUEL OIL IN EXISTING STORAGE TANK SHALL BE CLEANED AND TRANSFERRED TO NEW TANK (TK–001). THE APPROXIMATE LIQUID LEVEL IN TANK IS 6 FEET ABOVE THE FLOOR. THE S&WB ESTIMATES 3 FEET OF SLUDGE AND 3 FEET OF FUEL.
5. FUEL OIL SLUDGE DISPOSAL SHALL BE IN ACCORDANCE WITH SPECIFICATION SECTION 02 65 00.
6. SEE SHEET CA–01 FOR EXISTING SITE LEGEND.
7. ALL UTILITIES TO REMAIN UNLESS OTHERWISE NOTED.
8. FIELD VERIFY LOCATION OF EXISTING UTILITIES PRIOR TO START OF CONSTRUCTION.
9. PROVIDE TEMPORARY EROSION AND SEDIMENT CONTROL AND STORM WATER POLLUTION PREVENTION PLAN, USING BEST MANAGEMENT PRACTICES, IN ACCORDANCE WITH SPECIFICATION SECTION 01 57 13.

REV.	DATE	DESCRIPTION	BY
A	10–25–19	AS–BUILT MARKUPS	LHN

SEWERAGE AND WATER BOARD OF NEW ORLEANS

CONTRACT No. 1369

HMGP EMERGENCY FUEL STORAGE RETROFIT POWER PLANT
MAIN WATER PURIFICATION PLANT POWER COMPLEX

(A) AS–BUILT REVISIONS NOT PROVIDED FOR THIS SHEET BY THE CONTRACTOR.

THIS DOCUMENT ORIGINALLY ISSUED AND SEALED BY LISBETH HABANS NAGRATH, LICENCE No. 36792 ON 2-6-15. THIS DOCUMENT SHOULD NOT BE CONSIDERED A CERTIFIED DOCUMENT.

FUEL STORAGE TANK AREA DEMOLITION PLAN

Trigon — Quality ▲ Commitment ▲ Client Service

TRIGON DWG. NO. CA-02

TRIGON ASSOCIATES, LLC
1515 POYDRAS STREET
SUITE 2200
NEW ORLEANS, LA 70112
TEL: 504-585-5767

trigonassociates.com

DR:	SJ CLARK
CK:	RA CASSANOVA
AP:	LH NAGRATH
LAST EDIT:	
SCALE:	1"=20'-0"
DATE:	JANUARY 28, 2015

GENERAL SUPERINTENDENT

DWG. No. 12098-W8

SET NO: SHEET NO: 5 OF 72

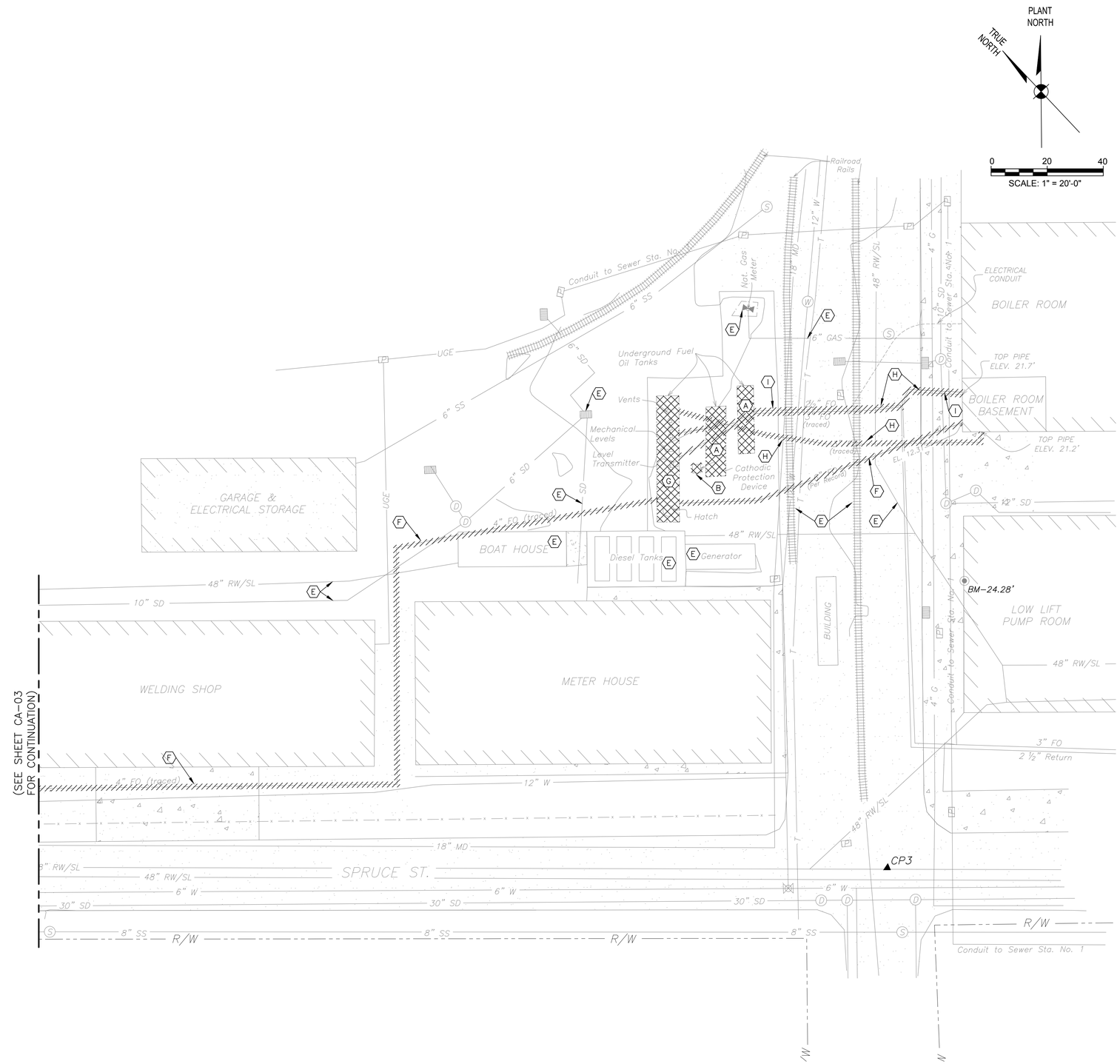

DEMOLITION LEGEND:

- TO BE REMOVED.
- TO BE RELOCATED.
- TO BE ABANDONED.

SEE SPECIFIC DEMOLITION NOTES FOR DESCRIPTION OF WORK TO BE PERFORMED.

- (A) TO BE REMOVED FROM SITE.
- (B) COORDINATE REMOVAL/RETURN OF ITEM TO S&WB.
- (C) (NOT USED)
- (D) (NOT USED)
- (E) TO BE PROTECTED DURING CONSTRUCTION.
- (F) TO BE ABANDONED. FILL WITH FLOWABLE MATERIAL (SAND/CEMENT MIXTURE) AND PLUG AT BOTH ENDS FOLLOWING INSTALLATION OF NEW LINE.
- (G) TO BE REMOVED FROM SITE FOLLOWING TRANSFER OF FUEL OIL SERVICE.
- (H) TO BE ABANDONED FOLLOWING INSTALLATION OF NEW LINES.
- (I) COORDINATE WITH S&WB DURING REMOVAL OF FUEL OIL LINES TO VERIFY LEVEL OF SERVICE OF EXISTING ADJACENT COMPRESSED AIR LINES. EXISTING FUEL LINES TO AND FROM GAS TURBINE ARE TO REMAIN.

DEMOLITION NOTES:

1. SEE SPECIFICATION SECTION 01 31 13 PROJECT COORDINATION FOR CONSTRUCTION SEQUENCING.
2. DEMOLITION WORK SHALL BE IN ACCORDANCE WITH SPECIFICATION SECTION 02 41 00 DEMOLITION. SEE SPECIFICATION SECTION 02 65 00 UNDERGROUND AND ABOVEGROUND STORAGE TANK REMOVAL.
3. THREE (3) EXISTING UNDERGROUND STORAGE TANKS SHALL BE REMOVED. THE LARGEST TANK (15,000 GALLONS) IS CURRENTLY IN-SERVICE. FUEL FROM THE IN-SERVICE TANK SHALL BE TRANSFERRED TO TEMPORARY TRAILER TANK(S) WITH TEMPORARY PIPING TO THE DIESEL PUMP ROOM DURING DEMOLITION AND CONSTRUCTION. CONTRACTOR TO PROVIDE DETACHABLE FLEXIBLE HOSES TO ALLOW REPOSITIONING OF TEMPORARY TANK. (1)
4. SEE SHEET CA-01 FOR EXISTING SITE LEGEND.
7. ALL UTILITIES TO REMAIN UNLESS OTHERWISE NOTED.
8. FIELD VERIFY LOCATION OF EXISTING UTILITIES PRIOR TO START OF CONSTRUCTION.
9. PROVIDE TEMPORARY EROSION AND SEDIMENT CONTROL AND STORM WATER POLLUTION PREVENTION PLAN, USING BEST MANAGEMENT PRACTICES, IN ACCORDANCE WITH SPECIFICATION SECTION 01 57 13.

(A) AS-BUILT REVISIONS NOT PROVIDED FOR THIS SHEET BY THE CONTRACTOR.

REV.	DATE	DESCRIPTION	BY
A	10-25-19	AS-BUILT MARKUPS	LHN
1	3-19-15	REVISED NOTE 3 AND REMOVED RAIL OPTION (ADD.2)	LHN

SEWERAGE AND WATER BOARD OF NEW ORLEANS

CONTRACT No. 1369

HMGP EMERGENCY FUEL STORAGE
RETROFIT POWER PLANT
MAIN WATER PURIFICATION PLANT POWER COMPLEX

DIESEL PUMP ROOM/DAY TANK AREA DEMOLITION PLAN

THIS DOCUMENT ORIGINALLY ISSUED AND SEALED BY LISBETH HABANS NAGRATH, LICENCE No. 36792 ON 2-6-15. THIS DOCUMENT SHOULD NOT BE CONSIDERED A CERTIFIED DOCUMENT.

Trigon
Quality ▲ Commitment ▲ Client Service

TRIGON ASSOCIATES, LLC
1515 POYDRAS STREET
SUITE 2200
NEW ORLEANS, LA 70112
TEL: 504-585-5767

trigonassociates.com

TRIGON DWG. NO. CA-03

DR:	SJ CLARK
CK:	RA CASSANOVA
AP:	LH NAGRATH
LAST EDIT:	
SCALE:	1"=20'-0"
DATE:	JANUARY 28, 2015

GENERAL SUPERINTENDENT

DWG. No. 12098-W8

SET NO: SHEET NO: 6 OF 72

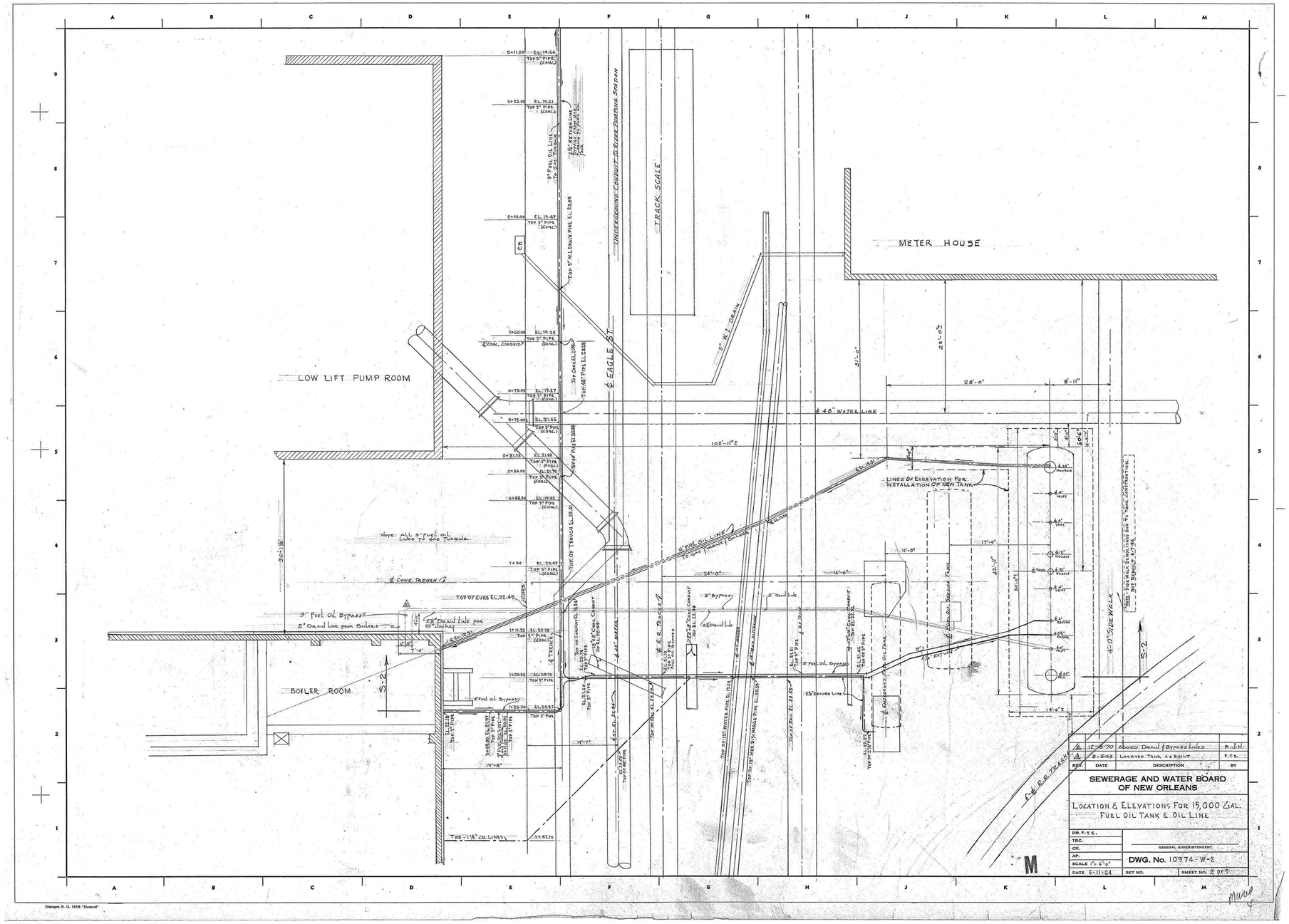

REV.	DATE	DESCRIPTION	BY
A	12-6-70	Added Drain & Bypass Lines	R.J.H.
A	8-1-63	Located Tank As Built	F.T.S.

SEWERAGE AND WATER BOARD OF NEW ORLEANS

LOCATION & ELEVATIONS FOR 15,000 GAL. FUEL OIL TANK & OIL LINE

DR. F.T.S.	
TRC.	
CK.	GENERAL SUPERINTENDENT
AP.	DWG. No. 10974-W-2
SCALE 1"= 6'-0"	
DATE 6-11-64	SET NO. SHEET NO. 2 OF 5

DRAWING NO. 10974-W2 SHEET 2 OF 5

FOR REFERENCE ONLY

⚠ AS-BUILT REVISIONS NOT PROVIDED FOR THIS SHEET BY THE CONTRACTOR.

Trigon
Quality ▲ Commitment ▲ Client Service

TRIGON DWG. NO. CA-04

TRIGON ASSOCIATES, LLC
1515 POYDRAS STREET
SUITE 2200
NEW ORLEANS, LA 70112
TEL: 504-585-5767

trigonassociates.com

REV.	DATE	DESCRIPTION	BY
A	10-25-19	AS-BUILT MARKUPS	LHN

SEWERAGE AND WATER BOARD OF NEW ORLEANS

CONTRACT No. 1369

HMGP EMERGENCY FUEL STORAGE
RETROFIT POWER PLANT
MAIN WATER PURIFICATION PLANT POWER COMPLEX

EXISTING FUEL OIL PIPING PLAN

DR:	SJ CLARK
CK:	RA CASSANOVA
AP:	LH NAGRATH
LAST EDIT:	
SCALE:	NOT TO SCALE
DATE:	JANUARY 28, 2015

GENERAL SUPERINTENDENT

DWG. No. 12098-W8

SET NO: SHEET NO: 7 OF 72

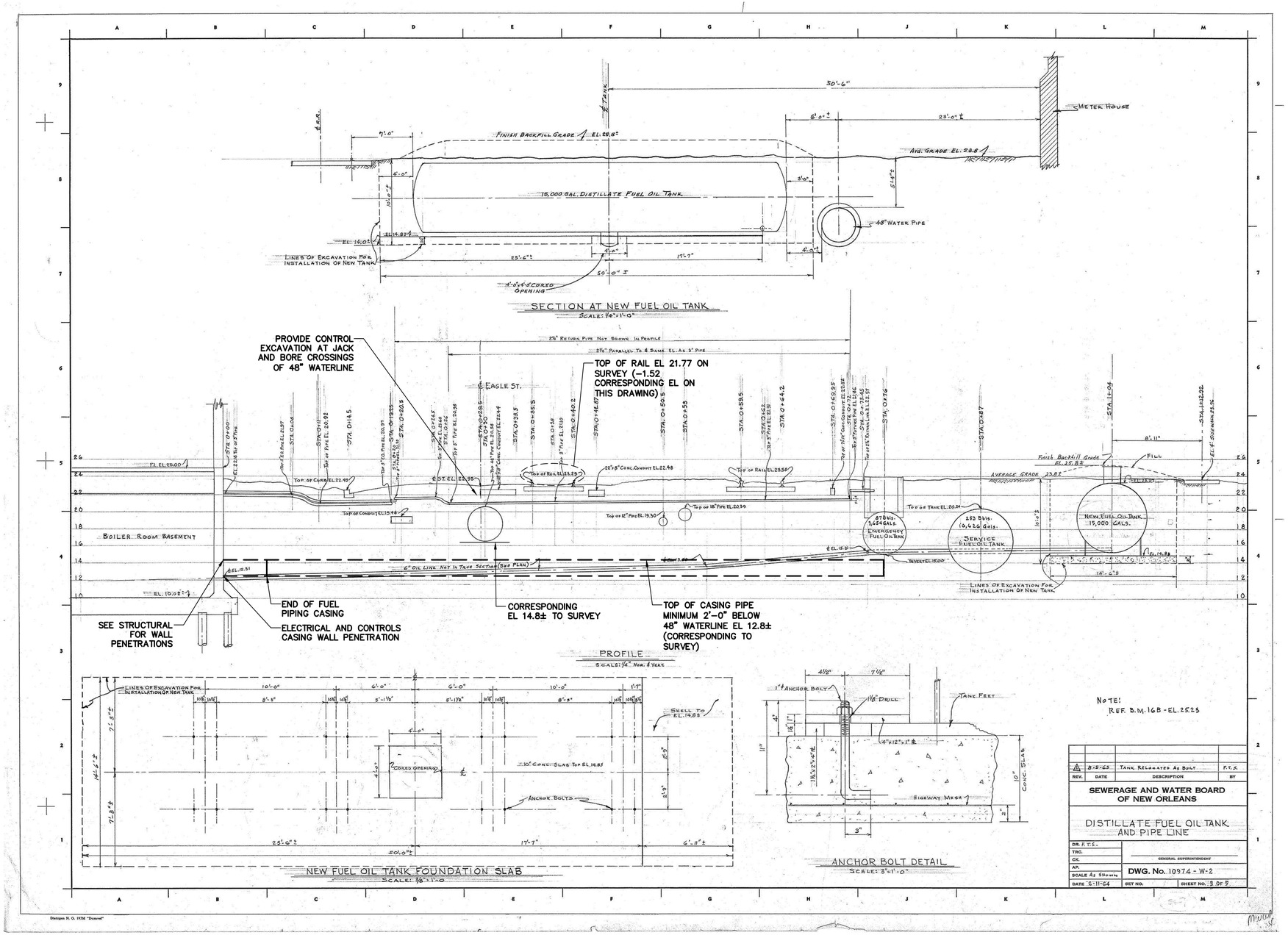

NOTE:
REF. B.M. 16B - EL. 25.23

REV.	DATE	DESCRIPTION	BY
A	8-25-65	TANK RELOCATED AS BUILT	F.T.S.

SEWERAGE AND WATER BOARD OF NEW ORLEANS

DISTILLATE FUEL OIL TANK AND PIPE LINE

DR. F.T.S.	
TRC.	
CK.	GENERAL SUPERINTENDENT
AP.	DWG. No. 10974-W-2
SCALE As Shown	
DATE 6-11-64	SET NO. SHEET NO. 3 OF 5

Dietzgen N. O. 19758 "Duoprint"

DRAWING NO. 10974-W2 SHEET 3 OF 5

A JACK AND BORE REPLACED WITH OPEN CUT PER FCO-009/RFQ-001. SEE SUL-0243 FRO HAND SKETCHED RECORD DRAWINGS.

NOTES:

1. THE BACKGROUND SHOWN ON THIS DRAWING IS A COPY OF SWBNO DRAWING 10974-W-2, SHEET 3 OF 5, DATED 6-11-64. THIS BACKGROUND HAS BEEN INCLUDED FOR REFERENCE ONLY.
2. ELEVATIONS SHOWN ON REFERENCE DRAWING DO NOT CORRESPOND TO SURVEY DATUM. FIELD VERIFY ELEVATION OF PROPOSED CASING PIPES. TOP OF CASING PIPES SHALL BE MINIMUM 2'-0" BELOW 48" WATERLINE. PROVIDE CONTROL EXCAVATION TO VERIFY LOCATION OF 48" WATERLINE AND TO ENSURE DISTANCE OF CASING PIPE FROM BOTTOM OF 48" WATERLINE.

REV.	DATE	DESCRIPTION	BY
A	10-25-19	AS-BUILT MARKUPS	LHN

SEWERAGE AND WATER BOARD OF NEW ORLEANS

CONTRACT No. 1369

HMGP EMERGENCY FUEL STORAGE
RETROFIT POWER PLANT
MAIN WATER PURIFICATION PLANT POWER COMPLEX

EXISTING FUEL OIL PIPING SECTION / JACK AND BORE

THIS DOCUMENT ORIGINALLY ISSUED AND SEALED BY LISBETH HABANS NAGRATH, LICENCE No. 36792 ON 2-6-15. THIS DOCUMENT SHOULD NOT BE CONSIDERED A CERTIFIED DOCUMENT.

Trigon
Quality ▲ Commitment ▲ Client Service

TRIGON DWG. NO. CA-05

TRIGON ASSOCIATES, LLC
1515 POYDRAS STREET
SUITE 2200
NEW ORLEANS, LA 70112
TEL: 504-585-5767
trigonassociates.com

DR.	SJ CLARK
CK:	RA CASSANOVA
AP:	LH NAGRATH
LAST EDIT:	
SCALE:	NOT TO SCALE
DATE:	JANUARY 28, 2015

GENERAL SUPERINTENDENT

DWG. No. 12098-W8

SET NO: SHEET NO: 8 OF 72

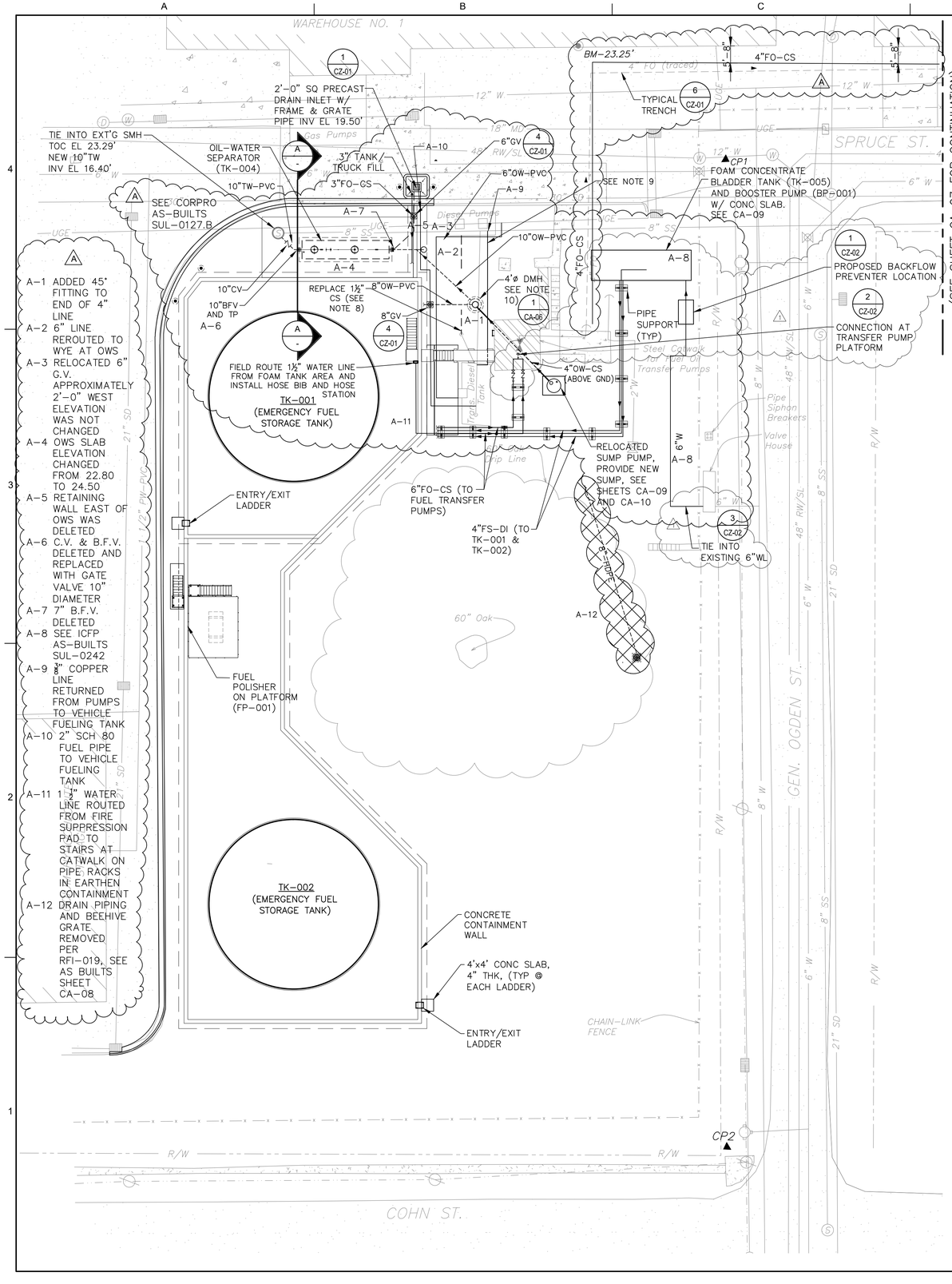

A-1 ADDED 45° FITTING TO END OF 4" LINE

A-2 6" LINE REROUTED TO WYE AT OWS

A-3 RELOCATED 6" G.V. APPROXIMATELY 2'-0" WEST ELEVATION WAS NOT CHANGED

A-4 OWS SLAB ELEVATION CHANGED FROM 22.80 TO 24.50

A-5 RETAINING WALL EAST OF OWS WAS DELETED

A-6 C.V. & B.F.V. DELETED AND REPLACED WITH GATE VALVE 10" DIAMETER

A-7 7" B.F.V. DELETED

A-8 SEE ICFP AS-BUILTS SUL-0242

A-9 ¾" COPPER LINE RETURNED FROM PUMPS TO VEHICLE FUELING TANK

A-10 2" SCH 80 FUEL PIPE TO VEHICLE FUELING TANK

A-11 1½" WATER LINE ROUTED FROM FIRE SUPPRESSION PAD TO STAIRS AT CATWALK ON PIPE RACKS IN EARTHEN CONTAINMENT

A-12 DRAIN PIPING AND BEEHIVE GRATE REMOVED PER RFI-019, SEE AS BUILTS SHEET CA-08

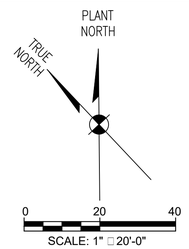

NOTES:

1. SEE SHEET CA-01 FOR EXISTING SITE LEGEND.
2. SEE SPECIFICATION SECTION 01 31 13 PROJECT COORDINATION FOR CONSTRUCTION SEQUENCING.
3. LOCATION OF EXISTING UTILITIES SHOWN ARE BASED ON EXISTING RECORDS. THE INFORMATION IS NOT TO BE RELIED ON AS BEING EXACT OR COMPLETE. CONTRACTOR SHALL FIELD VERIFY LOCATION OF ALL EXISTING UTILITIES PRIOR TO THE START OF CONSTRUCTION. ALL NEW UNDERGROUND PIPING SHALL BE FIELD ROUTED.
4. MINIMUM 2'-0" COVER REQUIRED OVER ALL NEW UNDERGROUND PIPING.
5. SIZE OF OWS IS APPROXIMATE. INVERT EL OF INLET IS FIXED AT EL 17.00' TO SUPPORT DRAINAGE. CONTRACTOR TO CONFIRM INLET AND OUTLET ELEVATIONS.
6. SEE SHEET SB-07 AND COORDINATE WITH OWS MANUFACTURER FOR INSTALLATION REQUIREMENTS AND RECOMMENDATIONS.
7. ALL OWS NOZZLES SHALL BE COVERED AND SEATED DURING EARTH WORK OPERATIONS.
8. REPLACE 1½" CS PIPE FROM VEHICLE FUELING TANK TO DIESEL FUEL PUMP CONTRACTOR TO FIELD VERIFY EXISTING LOCATION AND REROUTE AS REQUIRED TO AVOID NEW DRAIN LINES TO OWS.
9. REROUTE EXISTING VEHICLE FUELING TANK FILL LINE UNDER CATWALK. MODIFY OR REPLACE PIPE SUPPORTS IN-KIND. CONTRACTOR TO FIELD VERIFY TIE IN LOCATIONS.
10. SEE SPECIFICATIONS FOR S&WB STANDARD DRAINAGE MANHOLE AND COVER DETAILS.
11. PROVIDE IMPRESSED CURRENT CATHODIC PROTECTION SYSTEM FOR STEEL PIPE LINE AND OIL-WATER SEPARATOR IN ACCORDANCE WITH SECTION 26 42 00.
12. MATCH EXISTING GRADE FOR UTILITY TRENCH RESTORATION.
13. SEE SHEETS CA-09 AND CA-10 FOR PROPOSED SUMP.

10. 6-70' PILES DELETED RFI #013

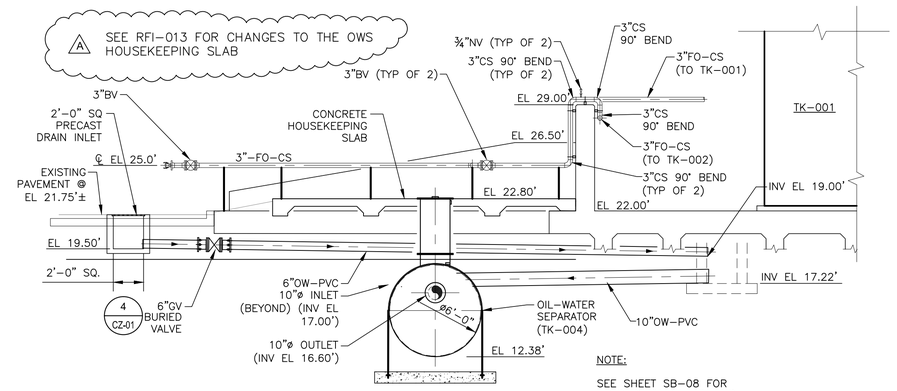

NOTE:

SEE SHEET SB-08 FOR HOLD DOWN, SLABS, AND EXCAVATION DETAILS

A CA-06/MB-02 **SECTION** SCALE:1"=5'-0"

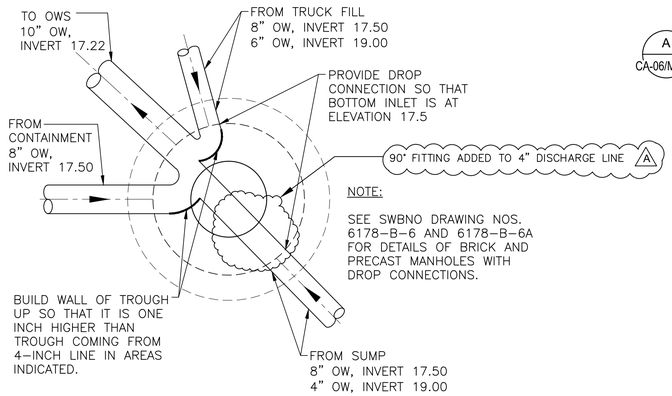

1 CA-06 **DETAIL** SCALE: NTS

A SEE FCO-014/RFQ-002 FOR CHANGES TO PIPING TO AND FROM OWS. SEE RFI-013 FOR CHANGES TO THE OWS HOUSEKEEPING SLAB. SEE E SHEETS FOR CONTRACTOR PROVIDED ELECTRICAL AS-BUILTS. NEW BELOW GRADE FUEL LINE ENCASED IN 4000 PSI FIBER RIENFORCED CONCRETE PER FCO-006.

REV.	DATE	DESCRIPTION	BY
A	10-25-19	AS-BUILT MARKUPS	LHN
1	3-23-15	REVISED PIPING, CALLOUTS & FIRE SUPPRESSION SLAB	LHN

SEWERAGE AND WATER BOARD OF NEW ORLEANS

CONTRACT N□ 1369

HMGP EMERGENCY FUEL STORAGE
RETROFIT POWER PLANT
MAIN WATER PURIFICATION PLANT POWER COMPLEX

FUEL STORAGE TANK AREA ENLARGED SITE PLAN

THIS DOCUMENT ORIGINALLY ISSUED AND SEALED BY LISBETH HABANS NAGRATH, LICENCE N□ 36792 ON 2-6-15. THIS DOCUMENT SHOULD NOT BE CONSIDERED A CERTIFIED DOCUMENT.

Trigon
Quality ▲ Commitment ▲ Client Service
TRIGON ASSOCIATES, LLC
1515 POYDRAS STREET
SUITE 2200
NEW ORLEANS, LA 70112
TEL: 504-585-5767
trig□nass□□iat□s.□□m

TRIGON DWG. NO. CA-06

DR:	SJ CLARK
CK:	RA CASSANOVA
AP:	LH NAGRATH
LAST EDIT:	
SCALE:	AS NOTED
DATE:	JANUARY 28, 2015

GENERAL SUPERINTENDENT

DWG. N□ 12098-W8

SET NO: SHEET NO: 9 OF 72

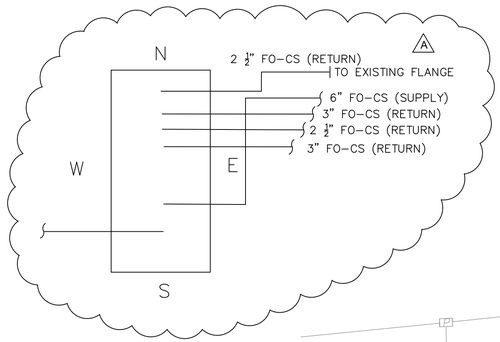

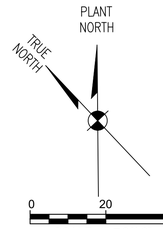

NOTES:

1. SEE SHEET CA-01 FOR EXISTING SITE LEGEND.
2. SEE SPECIFICATION SECTION 01 31 13 PROJECT COORDINATION FOR CONSTRUCTION SEQUENCING.
3. STEEL CASING PIPE TO BE INSTALLED BY JACK AND BORE FOR 6-INCH CARRIER PIPE (SUCTION FROM DAY TANK TO DIESEL PUMP ROOM) AND TWO (2) 3-INCH RETURN/BYPASS AND ONE (1) 2 ½"-INCH RETURN/BYPASS FROM DIESEL PUMP ROOM.
4. 2½" RETURN/BYPASS FROM GAS TURBINE NOT SHOWN. PIPE SHALL BE INSTALLED FROM EXISTING LOCATION IN EXCAVATED AREA TO NEW DAY TANK.
5. STEEL CASING PIPE TO BE INSTALLED BY JACK AND BORE FOR ELECTRICAL AND CONTROL CONDUITS. SEE ELECTRICAL SHEETS FOR DETAILS.
6. STEEL CASING PIPE SHALL HAVE MINIMUM WALL THICKNESS OF 0.500 INCHES. STEEL SPACERS SHALL BE USED FOR SUPPORT OF CARRIER PIPES, AT 10 FOOT INTERVALS, IN ACCORDANCE WITH MANUFACTURERS RECOMMENDATIONS SUCH THAT EACH SPACER SUPPORTS THE SAME UNIT WEIGHT OF THE CARRIER PIPES.
7. CASING PIPES REQUIRE CATHODIC PROTECTION. STEEL SPACERS WITH EPDM OR COMPOSITE CONTACT SURFACES SHOULD BE USED.
8. ENCLOSE ENDS OF CASING PIPE WITH 8-INCH BRICK MASONRY WITH WATER TIGHT GROUT.
9. PROVIDE IMPRESSED CURRENT & CATHODIC PROTECTION SYSTEM FOR STEEL PIPE LINES AND STEEL CASING PIPES IN ACCORDANCE WITH SECTION 26 42 00.
10. LOCATION OF EXISTING UTILITIES SHOWN ARE BASED ON EXISTING RECORDS. THE INFORMATION IS NOT TO BE RELIED ON AS BEING EXACT OR COMPLETE. CONTRACTOR SHALL FIELD VERIFY LOCATION OF ALL EXISTING UTILITIES PRIOR TO THE START OF CONSTRUCTION. ALL NEW UNDERGROUND PIPING SHALL BE FIELD ROUTED.
11. MATCH EXISTING GRADE FOR UTILITY TRENCH RESTORATION.
12. SLOPE NEW PAVEMENT TO NEAREST DRAIN INLETS.
13. UNDERGROUND TANKS FOR REMOVAL SHOWN FOR COORDINATION OF EXCAVATION.
14. SPOT ELEVATIONS SHOWN ARE EXISTING.

SEE SUL-00243 FOR HAND SKETCHED RECORD DRAWINGS

A

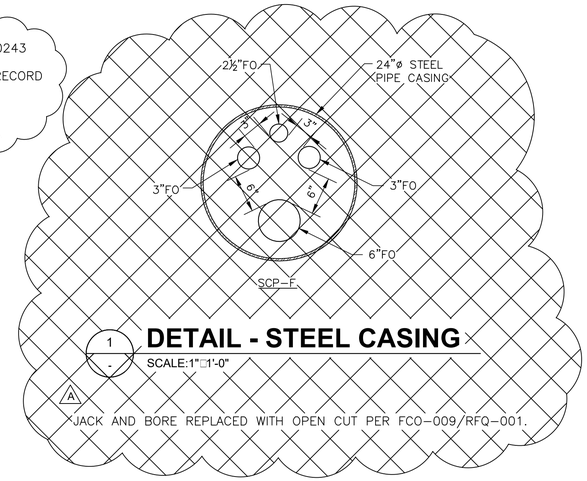

1 - **DETAIL - STEEL CASING**

SCALE:1"=1'-0"

A JACK AND BORE REPLACED WITH OPEN CUT PER FCO-009/RFQ-001.

A NEW BELOW-GRADE FUEL LINES ENCASED IN 4000 PSI FIBER REINFORCED CONCRETE PER FCO-006 AND FCO-009/RFQ-001.STEEL PLATES INSTALLED OVER FUEL LINES AND ELECTRICAL/CONTROLS DUCTBANK FOR EAGLE STREET CROSSING PER FCO-009/RFQ-001. SEE E SHEETS FOR CONTRACTOR PROVIDED ELECTRICAL AS-BUILTS.

REV.	DATE	DESCRIPTION	BY
A	10-25-19	AS-BUILT MARKUPS	LHN

SEWERAGE AND WATER BOARD OF NEW ORLEANS

CONTRACT N□ 1369

HMGP EMERGENCY FUEL STORAGE RETROFIT POWER PLANT
MAIN WATER PURIFICATION PLANT POWER COMPLEX

DIESEL PUMP ROOM/DAY TANK AREA ENLARGED SITE, YARD PIPING & GRADING PLAN

THIS DOCUMENT ORIGINALLY ISSUED AND SEALED BY LISBETH HABANS NAGRATH, LICENCE N□ 36792 ON 2-6-15. THIS DOCUMENT SHOULD NOT BE CONSIDERED A CERTIFIED DOCUMENT.

Trigon
Quality ▲ Commitment ▲ Client Service

TRIGON DWG. NO. CA-07

TRIGON ASSOCIATES, LLC
1515 POYDRAS STREET
SUITE 2200
NEW ORLEANS, LA 70112
TEL: 504-585-5767
trig□nass□□iat□s.□□m

DR:	SJ CLARK
CK:	RA CASSANOVA
AP:	LH NAGRATH
LAST EDIT:	
SCALE:	AS NOTED
DATE:	JANUARY 28, 2015

GENERAL SUPERINTENDENT

DWG. N□ 12098-W8

SET NO: SHEET NO: 10 OF 72

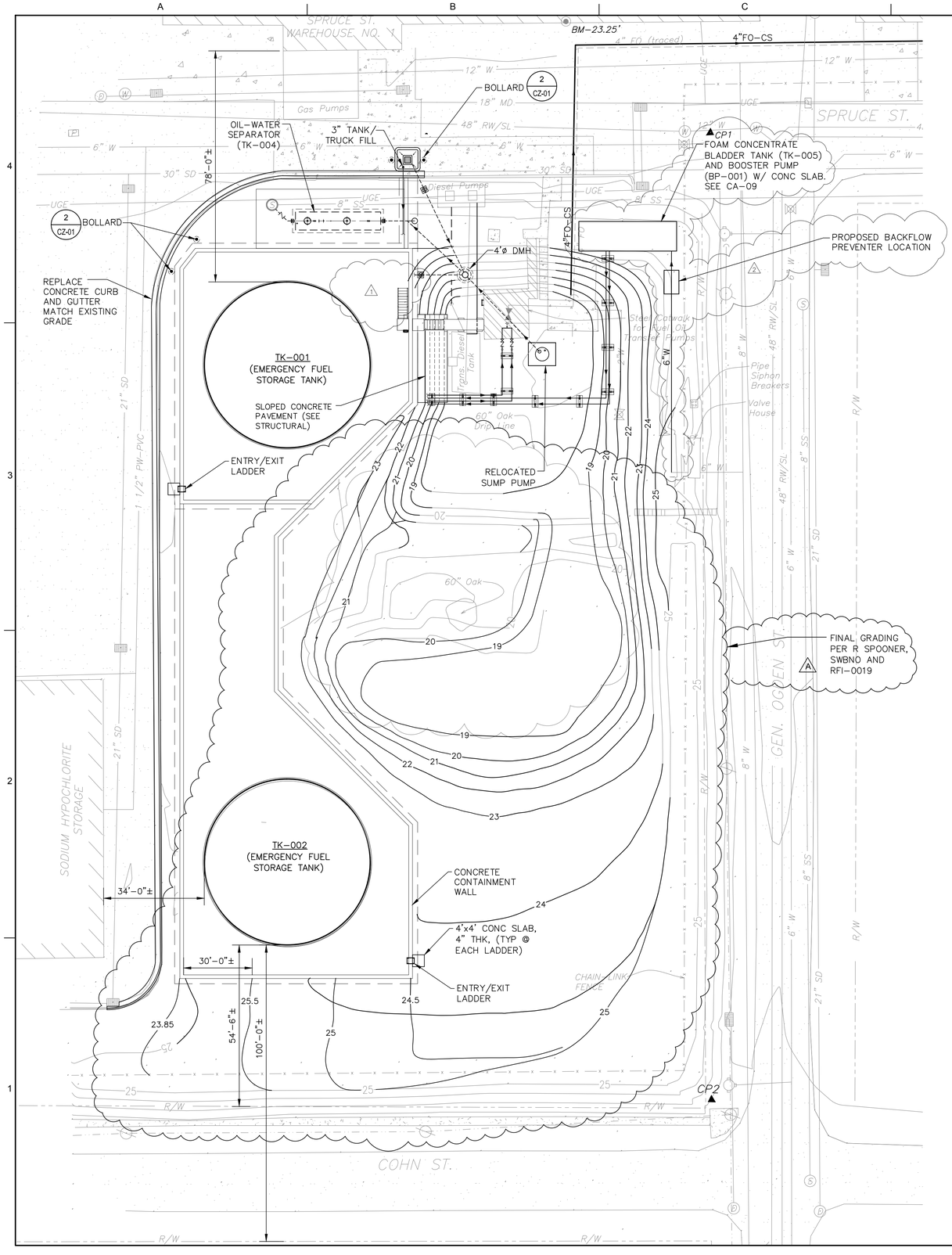

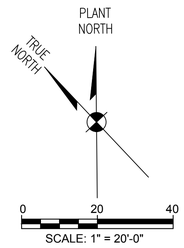

GRADING NOTES:

1. ALL UTILITIES TO REMAIN UNLESS OTHERWISE NOTED.
2. LOCATION OF EXISTING UTILITIES SHOWN ARE BASED ON EXISTING RECORDS. THE INFORMATION IS NOT TO BE RELIED ON AS BEING EXACT OR COMPLETE. CONTRACTOR SHALL FIELD VERIFY LOCATION OF ALL EXISTING UTILITIES PRIOR TO THE START OF CONSTRUCTION. ALL NEW UNDERGROUND PIPING SHALL BE FIELD ROUTED.
3. SPOT ELEVATIONS SHOWN ARE EXISTING.

REV.	DATE	DESCRIPTION	BY
A	10-25-19	AS-BUILT MARKUPS	LHN
2	3-23-15	REVISED FIRE SUPPRESSION SLAB & WL CONN. (ADD3)	LHN
1	3-16-15	DELETED GV CALLOUT (ADD1)	LHN

SEWERAGE AND WATER BOARD OF NEW ORLEANS

CONTRACT No. 1369

HMGP EMERGENCY FUEL STORAGE
RETROFIT POWER PLANT
MAIN WATER PURIFICATION PLANT POWER COMPLEX

FUEL STORAGE TANK AREA SITE GRADING PLAN

THIS DOCUMENT ORIGINALLY ISSUED AND SEALED BY LISBETH HABANS NAGRATH, LICENCE No. 36792 ON 2-6-15. THIS DOCUMENT SHOULD NOT BE CONSIDERED A CERTIFIED DOCUMENT.

Trigon
Quality ▲ Commitment ▲ Client Service

TRIGON DWG. NO. CA-08

TRIGON ASSOCIATES, LLC
1515 POYDRAS STREET
SUITE 2200
NEW ORLEANS, LA 70112
TEL: 504-585-5767

trigonassociates.com

DR:	SJ CLARK
CK:	RA CASSANOVA
AP:	LH NAGRATH
LAST EDIT:	
SCALE:	AS NOTED
DATE:	JANUARY 28, 2015

GENERAL SUPERINTENDENT

DWG. No. 12098-W8

SET NO: SHEET NO: 11 OF 72

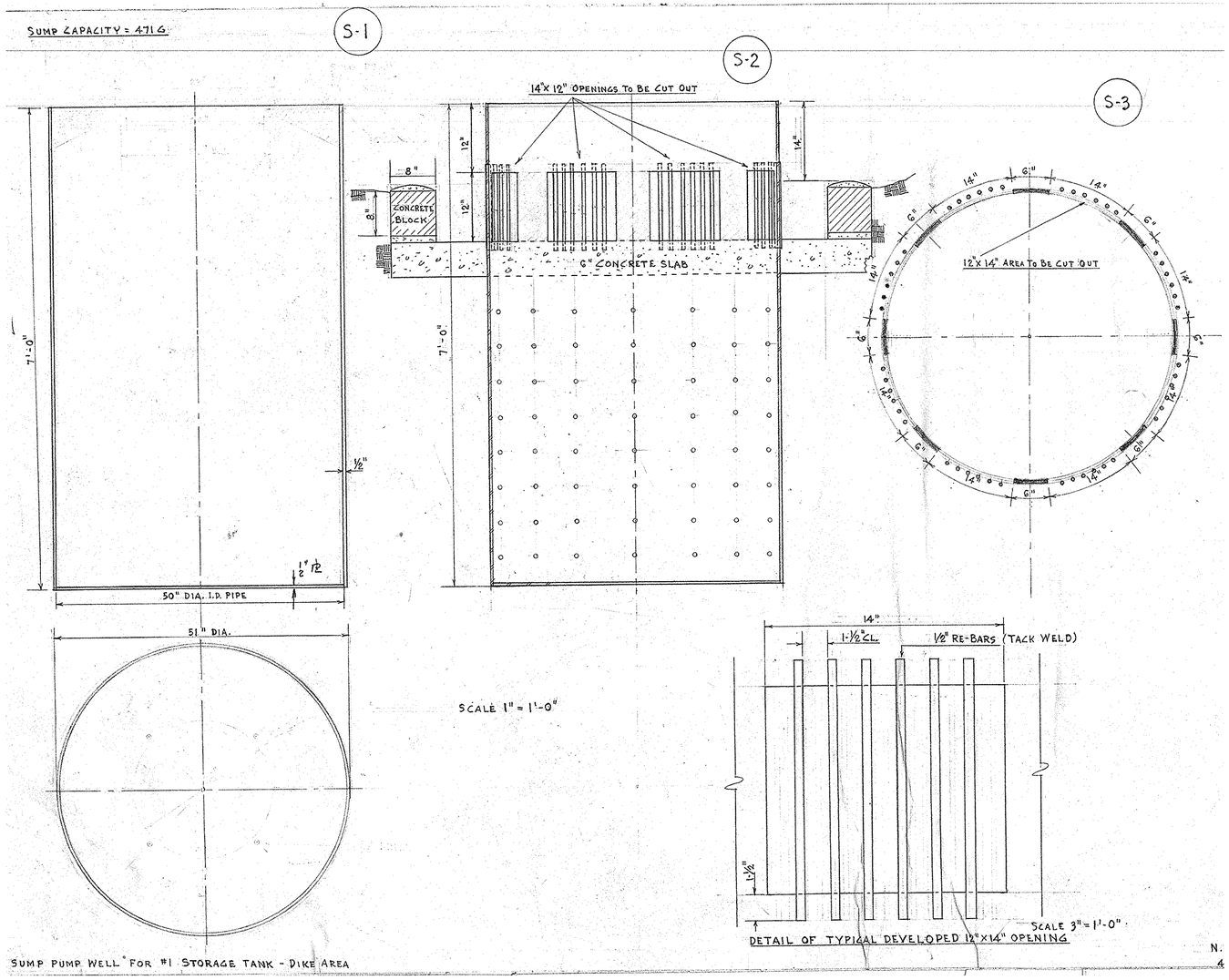

REFERENCE DRAWING - SUMP

SCALE:NTS (SEE NOTE 1)

SUMP NOTES:

1. THE BACKGROUND SHOWN IS REFERENCE DRAWING NO. 10961–W–2, SHEET 3A OF 3, DATED 11–13–64.
2. PROVIDE NEW SUMP IN KIND. FIELD VERIFY EXISTING SUMP PUMP COVER AND SUMP FOR MODIFICATIONS. PROVIDE COVER AND SUMP TO ACCOMMODATE EXISTING PUMP AND MOTOR. EXISTING PUMP, MOTOR, CHECK VALVE, AND PIPING FROM PUMP TO CHECK VALVE SHALL BE MOVED TO NEW SUMP LOCATION AS SHOWN ON CA–06 AND CA–08. DISCONNECT AND REMOVE EXISTING SUMP PUMP AND MOTOR. EXISTING LEVEL CONTROLLER TO BE USED FOR START/STOP OF EXISTING PUMP. SEE ELECTRICAL.

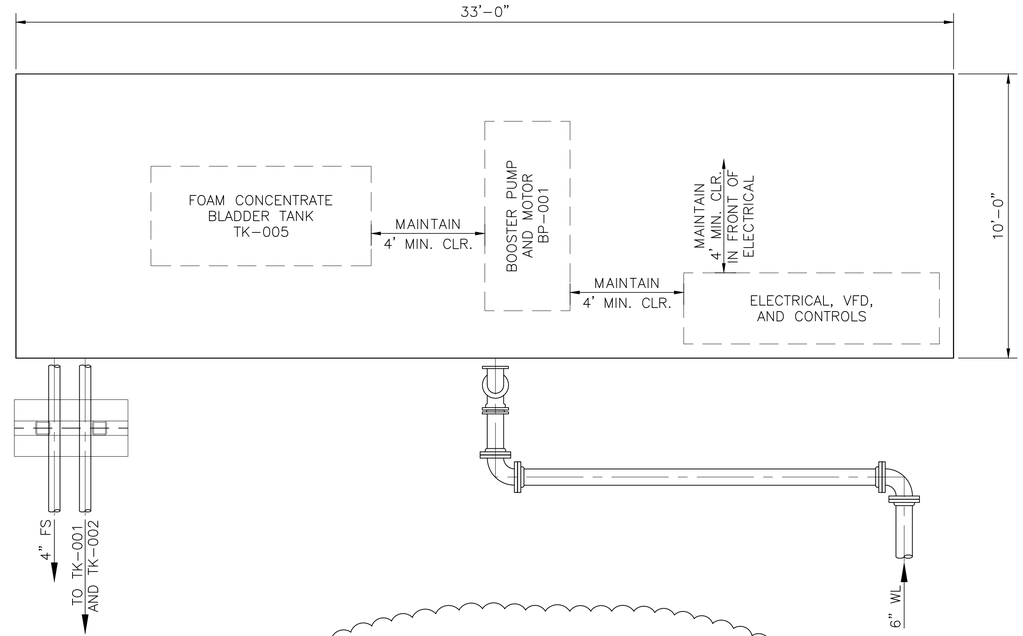

FIRE SUPPRESSION AREA

SCALE:3/8"=1'-0"

SEE SUL–0242 FOR ICFP AS–BUILTS

FIRE SUPPRESSION NOTES:

1. CERTIFIED FIRE PROTECTION SPECIALIST (CFPS) SHALL VERIFY SIZING OF SYSTEM TO PROVIDE ADEQUATE FIRE SUPPRESSION COVERAGE FOR TK–001 AND TK–002. SUBMIT FIRE SUPPRESSION PLAN.
2. CONTRACTOR SHALL PROVIDE A COMPLETE FUNCTIONING FIRE SUPPRESSION AND AUTOMATION/DETECTION SYSTEM. LAYOUT AND SIZE OF PROPOSED SLAB SHALL BE ADJUSTED PER CFPS RECOMMENDATIONS AND MANUFACTURER REQUIREMENTS, AT NO COST TO OWNER.
3. PIPING AND VALVE CONFIGURATION SHALL BE THE RESPONSIBILITY OF THE CFPS AND SHALL PROVIDE RELEASE OF AFFF SOLUTION TO BOTH OR EITHER TK–001 AND/OR TK–002.
4. COORDINATE WITH ELECTRICAL ENGINEER ON ELECTRICAL REQUIREMENTS, INCLUDING VFD DRIVE SIZE, SHOULD PUMP HP VARY FROM SIZE SHOWN ON DRAWING AND LISTED IN SPECIFICATIONS. FIRE SUPPRESSION SUPPLIER SHALL BE RESPONSIBLE TO SUPPLY THE EQUIPMENT REQUIRED, ALONG WITH ASSOCIATED ELECTRICAL EQUIPMENT AND INSTALLATION AT NO COST TO OWNER.

REV.	DATE	DESCRIPTION	BY
A	10–25–19	AS–BUILT MARKUPS	LHN

SEWERAGE AND WATER BOARD OF NEW ORLEANS

CONTRACT No. 1369

HMGP EMERGENCY FUEL STORAGE RETROFIT POWER PLANT
MAIN WATER PURIFICATION PLANT POWER COMPLEX

FIRE SUPPRESSION AND SUMP DETAILS

THIS DOCUMENT ORIGINALLY ISSUED AND SEALED BY LISBETH HABANS NAGRATH, LICENCE No. 36792 ON 2-6-15. THIS DOCUMENT SHOULD NOT BE CONSIDERED A CERTIFIED DOCUMENT.

Trigon
Quality ▲ Commitment ▲ Client Service
TRIGON DWG. NO. CA-09

TRIGON ASSOCIATES, LLC
1515 POYDRAS STREET
SUITE 2200
NEW ORLEANS, LA 70112
TEL: 504-585-5767
trigonassociates.com

DR.	SJ CLARK
CK.	GA KOLENOVSKY
AP.	LH NAGRATH
LAST EDIT:	
SCALE:	1"=20'-0"
DATE:	JANUARY 28, 2015

GENERAL SUPERINTENDENT

DWG. No. 12098-W8

SET NO: SHEET NO: 12 OF 72

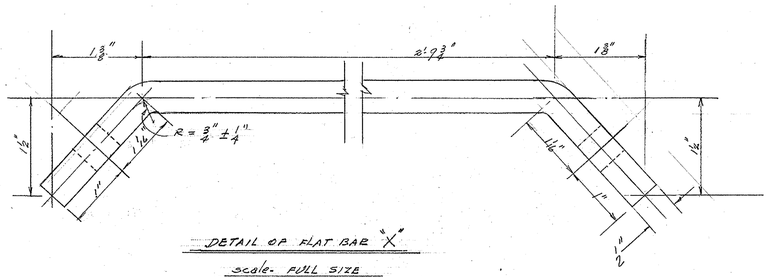

DETAIL OF FLAT BAR "X"

scale. FULL SIZE

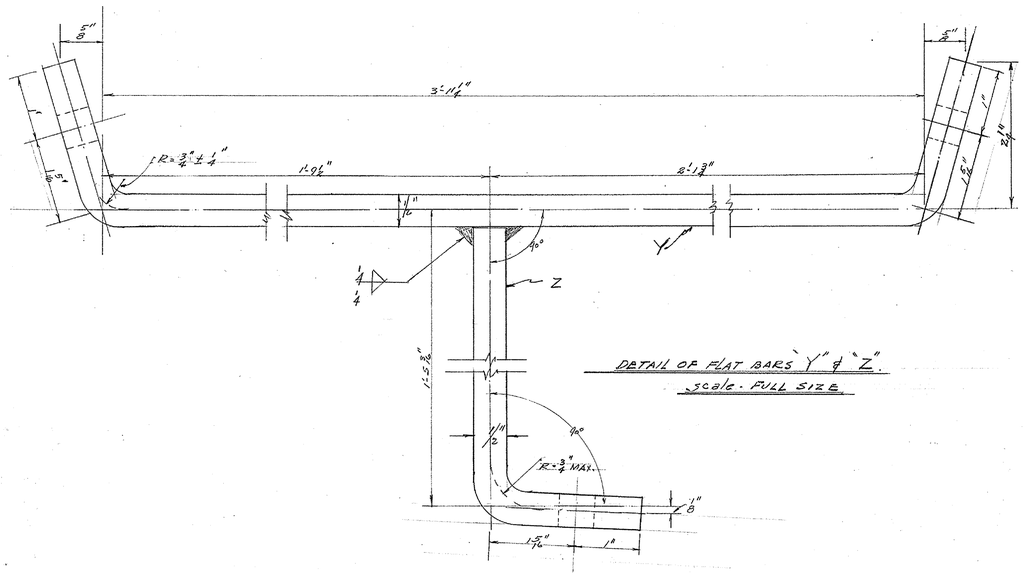

DETAIL OF FLAT BARS "Y" & "Z".

scale. FULL SIZE

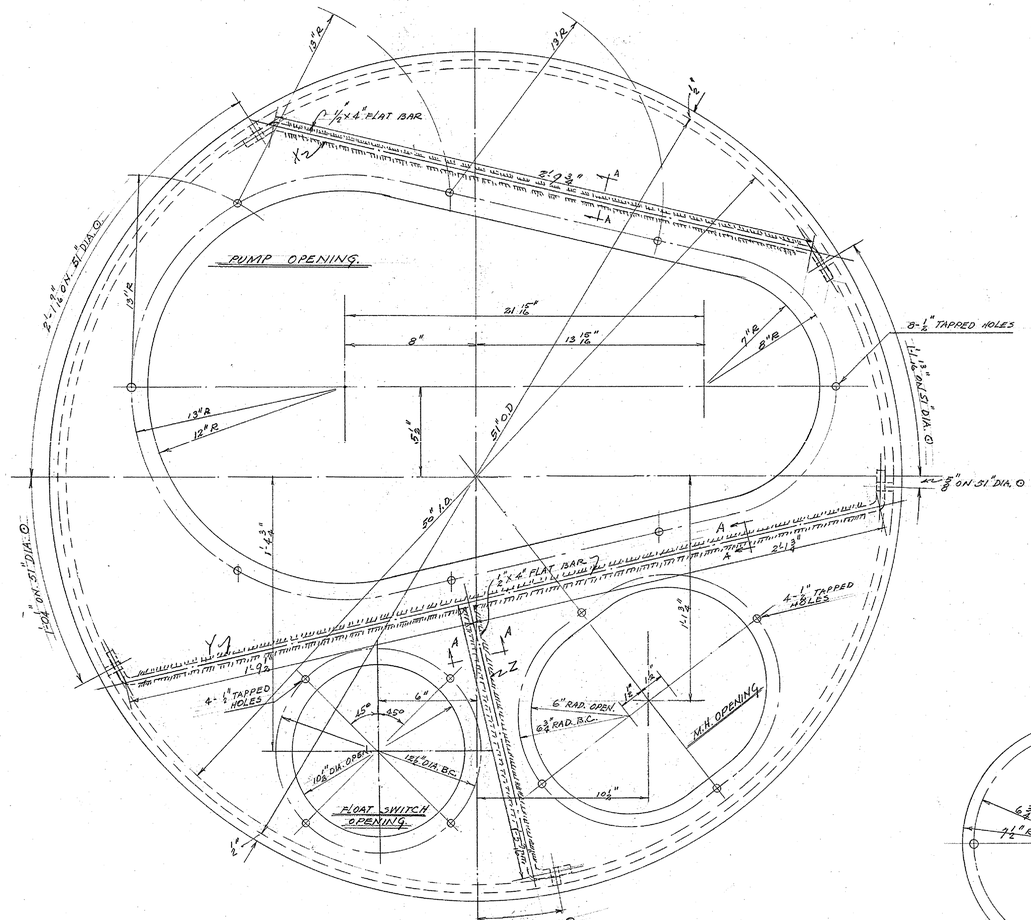

PUMP SUMP COVER PLATE

Scale. 3"=1'-0"

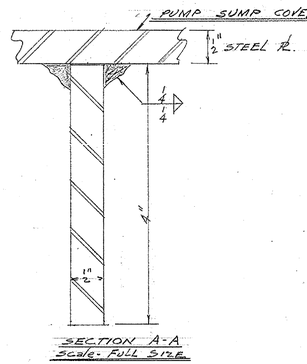

SECTION A-A

Scale. FULL SIZE

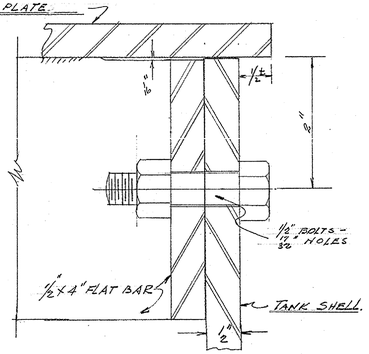

TYPICAL BOLTED CONNECTION

Scale: FULL SIZE

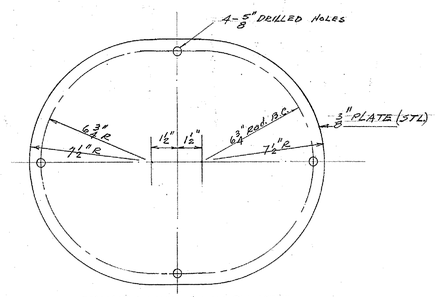

MANHOLE COVER PLATE

scale~ 3"=1'-0"

REFERENCE DRAWINGS - SUMP

SCALE:NTS (SEE NOTE 1)

NOTES:

1. THE BACKGROUND SHOWN IS REFERENCE DRAWING NO. 10961–W–2, SHEET 2A OF 3, DATED 6–64.
2. PROVIDE NEW SUMP PUMP COVER AND SUMP IN KIND. FIELD VERIFY EXISTING SUMP PUMP COVER AND SUMP FOR MODIFICATIONS. PROVIDE COVER AND SUMP TO ACCOMMODATE EXISTING PUMP AND MOTOR. EXISTING PUMP, MOTOR, CHECK VALVE, AND PIPING FROM PUMP TO CHECK VALVE SHALL BE MOVED TO NEW SUMP LOCATION AS SHOWN ON CA–06 AND CA–08.

REV.	DATE	DESCRIPTION	BY
A	10–25–19	AS–BUILT MARKUPS	LHN

SEWERAGE AND WATER BOARD OF NEW ORLEANS

CONTRACT No. 1369

HMGP EMERGENCY FUEL STORAGE
RETROFIT POWER PLANT
MAIN WATER PURIFICATION PLANT POWER COMPLEX

SUMP PUMP DETAILS

A AS–BUILT REVISIONS NOT PROVIDED FOR THIS SHEET BY THE CONTRACTOR.

THIS DOCUMENT ORIGINALLY ISSUED AND SEALED BY LISBETH HABANS NAGRATH, LICENCE No. 36792 ON 2-6-15. THIS DOCUMENT SHOULD NOT BE CONSIDERED A CERTIFIED DOCUMENT.

Trigon
Quality ▲ Commitment ▲ Client Service

TRIGON ASSOCIATES, LLC
1515 POYDRAS STREET
SUITE 2200
NEW ORLEANS, LA 70112
TEL: 504-585-5767

trigonassociates.com

TRIGON DWG. NO. CA-10

DR:	SJ CLARK
CK:	GA KOLENOVSKY
AP:	LH NAGRATH
LAST EDIT:	
SCALE:	1"=20'-0"
DATE:	JANUARY 28, 2015

GENERAL SUPERINTENDENT

DWG. No. 12098-W8

SET NO:

SHEET NO: 13 OF 72

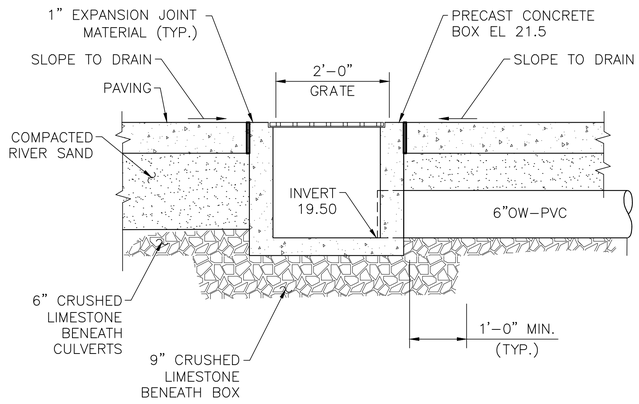

1 CA-06 DETAIL - PRECAST DRAIN INLET

SCALE: NTS

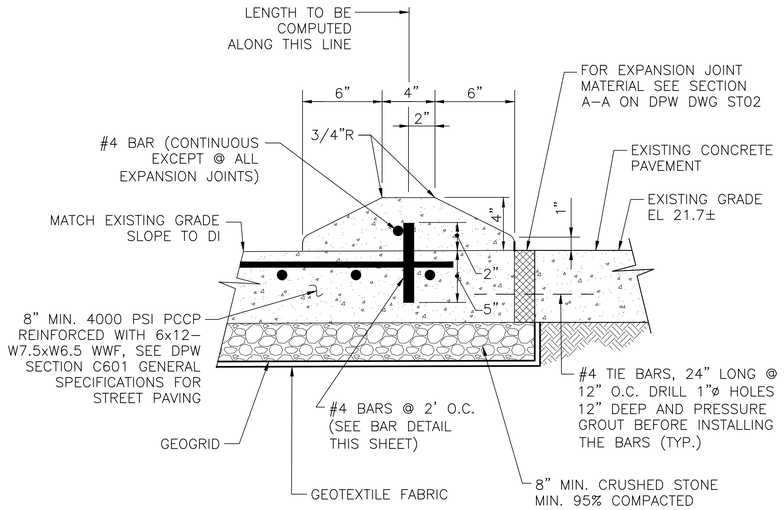

2 CA-08 DETAIL - CONCRETE MOUNTABLE CURB

SCALE: NTS

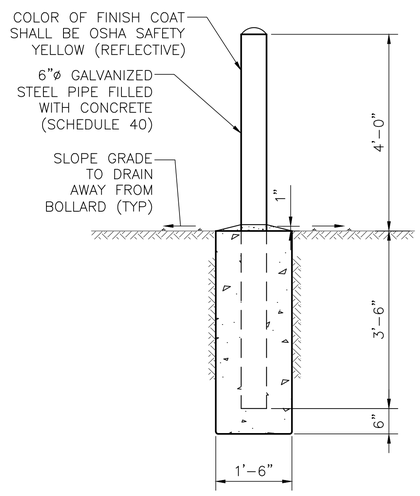

3 CA-08 DETAIL - BOLLARD

SCALE: NTS

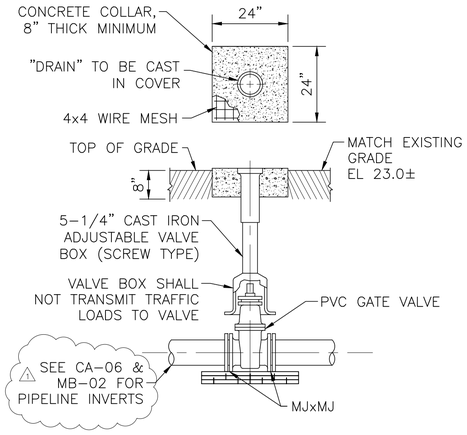

4 CA-06 DETAIL - TYPICAL BURIED VALVE INSTALLATION

SCALE: NTS

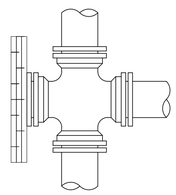

CROSS WITH PLUG

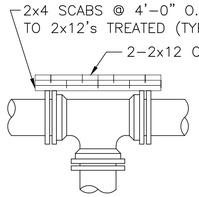

TEE

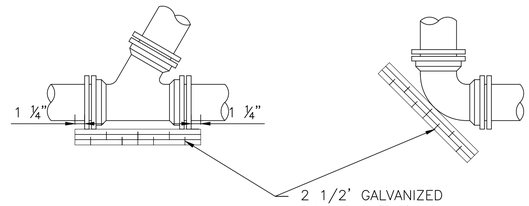

WYE

BEND

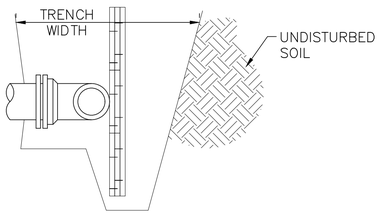

TYPICAL SECTION

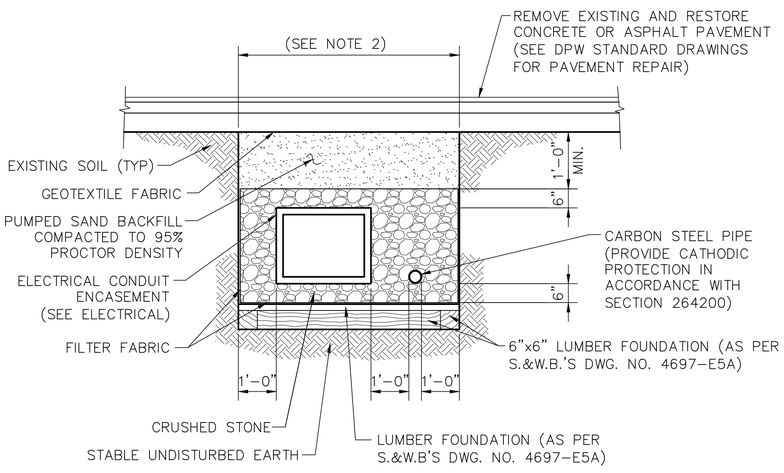

NOTES:

1. SHEETING AND BRACING FOR ALL EXCAVATIONS SHALL BE DESIGNED BY A REGISTERED LOUISIANA PROFESSIONAL ENGINEER.
2. DESIGN EXCAVATIONS FOR TYPE C SOIL, PER GEOTECHNICAL RECOMMENDATIONS, MARCH 7, 2014. MAXIMUM ALLOWABLE SLOPES FOR EXCAVATIONS LESS THAN 20 FT. DEEP ARE 1 ½:1 (H:V) PER 29 CFR PART 1926 SUBPART P.

6 CA-06/CA-07 DETAIL - TYPICAL PIPE TRENCH

SCALE: NTS

NOTES:

1. NUMBER OF REQ'D. BOARDS AS NEEDED DEPENDING UPON TRENCH WIDTH AND REQ'D BEARING AREA.
2. BOARDS SHALL BE PRESSURE TREATED.
3. NAILS SHALL BE GALVINIZED.

PIPE SIZE	MINIMUM REQUIRED SOIL BEARING AREA*
6"	10.6 SQ. FT.
8"	18.8 SQ. FT.

VALUES ARE FOR 90° BEND, BASED ON 500 P.S.F. SAFE BEARING LOAD AND PIPE PRESSURE OF 100 P.S.I. PLUS 33% SAFETY FACTOR FOR OTHER SOILS AND PRESSURES.

5 - DETAIL - TYPICAL THRUST RESTRAINT

SCALE: NTS

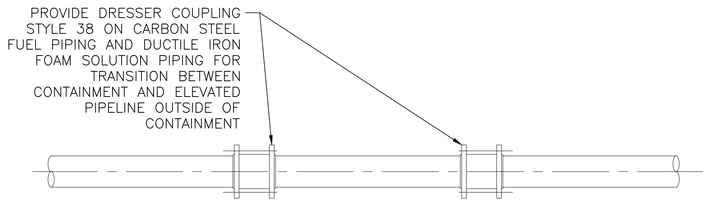

7 CA-06 DETAIL - TYPICAL PIPE DEFLECTION

SCALE: NTS

REV.	DATE	DESCRIPTION	BY
A	10–25–19	AS–BUILT MARKUPS	LHN
1	3–16–15	REVISED CALL-OUT DETAIL "4" (ADD.1)	LHN

AS–BUILT REVISIONS NOT PROVIDED FOR THIS SHEET BY THE CONTRACTOR.

THIS DOCUMENT ORIGINALLY ISSUED AND SEALED BY LISBETH HABANS NAGRATH, LICENCE No. 36792 ON 2-6-15. THIS DOCUMENT SHOULD NOT BE CONSIDERED A CERTIFIED DOCUMENT.

Trigon
Quality ▲ Commitment ▲ Client Service

TRIGON DWG. NO. CZ-01

TRIGON ASSOCIATES, LLC
1515 POYDRAS STREET
SUITE 2200
NEW ORLEANS, LA 70112
TEL: 504-585-5767
trigonassociates.com

SEWERAGE AND WATER BOARD OF NEW ORLEANS

CONTRACT No. 1369

HMGP EMERGENCY FUEL STORAGE RETROFIT POWER PLANT
MAIN WATER PURIFICATION PLANT POWER COMPLEX

CIVIL DETAILS

DR:	SJ CLARK
CK:	GA KOLENOVSKY
AP:	LH NAGRATH
LAST EDIT:	
SCALE:	AS NOTED
DATE:	JANUARY 28, 2015

GENERAL SUPERINTENDENT

DWG. No. 12098-W8

SET NO: SHEET NO: 14 OF 72

BACKFLOW PREVENTER NOTES:

1. REDUCED PRESSURE PRINCIPLE BACKFLOW PREVENTION ASSEMBLY SHALL COMPLY WITH ASSE 1013 & AWWA C511.
2. REDUCED PRESSURE DETECTOR BACKFLOW PREVENTION ASSEMBLY SHALL COMPLY WITH ASSE 1047.
3. DOUBLE CHECK VALVE BACKFLOW PREVENTION ASSEMBLY SHALL COMPLY WITH ASSE 1015 & AWWA C510.
4. DOUBLE CHECK DETECTOR BACKFLOW PREVENTION ASSEMBLY SHALL COMPLY WITH ASSE 1048.
5. BACKFLOW ASSEMBLY SHALL BE CENTERED ON CONCRETE PAD.
8. PIPE MATERIAL SHALL BE CLASS 350 DIP.
9. INSTALLATION SHALL BE IN COMPLIANCE WITH ALL APPLICABLE CITY ORDINANCES AND SPECIFICATIONS IN ADDITION TO THE ORLEANS PARISH PLUMBING CODE.
11. ALL 'NO LEAD' BRASS COMPONENTS SHALL MEET UNS C89833 AS PER ASTM B584.

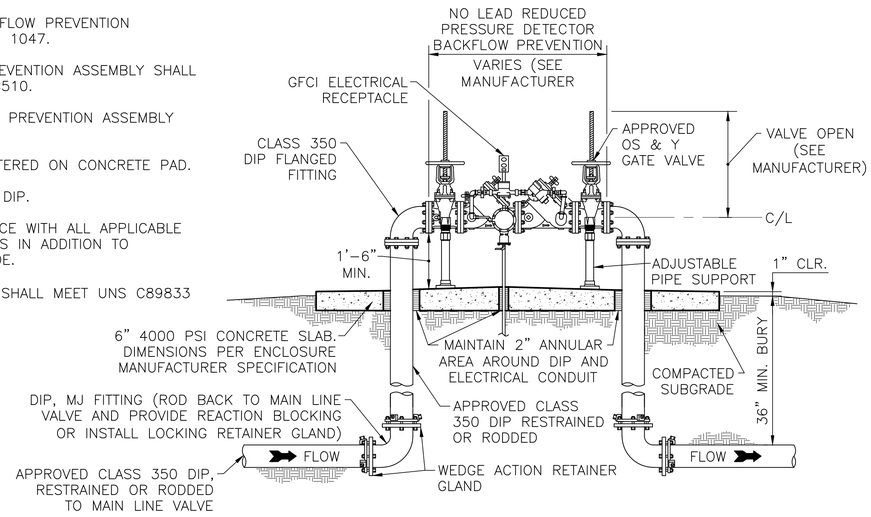

1 CA-06 TYPICAL BACKFLOW PREVENTER

SCALE:NTS

A SEE SUL-0242 FOR ICFP AS-BUILTS AND ABOVE GRADE PIPE REROUTING

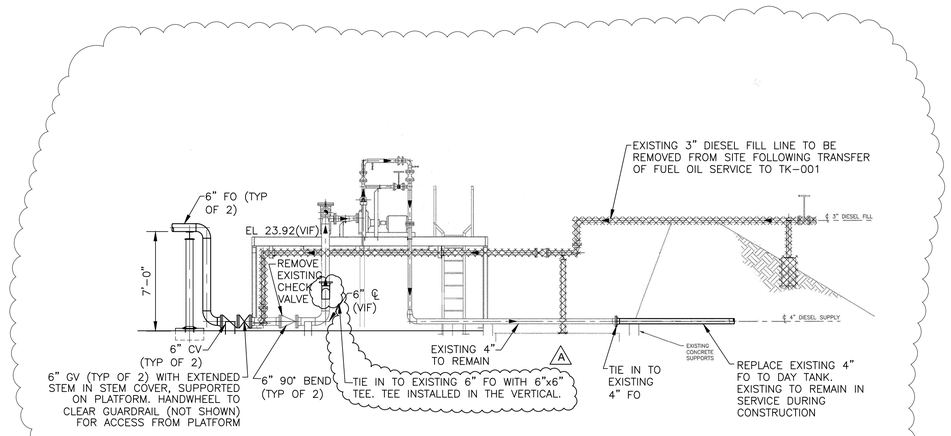

1

2 CA-06 CONNECTION AT TRANSFER PUMP PLATFORM

SCALE:3/16"□1'-0"

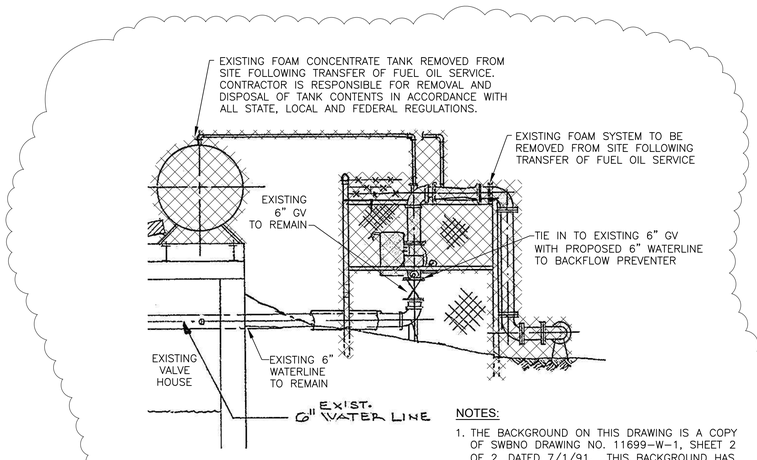

NOTES:

1. THE BACKGROUND ON THIS DRAWING IS A COPY OF SWBNO DRAWING NO. 11699-W-1, SHEET 2 OF 2, DATED 7/1/91. THIS BACKGROUND HAS BEEN INCLUDED FOR REFERENCE.

1

3 CA-06 WATERLINE CONNECTION AT VALVE HOUSE

SCALE:3/16"□1'-0"

REV.	DATE	DESCRIPTION	BY
A	10-25-19	AS-BUILT MARKUPS	LHN
1	3-23-15	ADDED DETAILS "2 & 3" (ADD.3)	LHN

SEWERAGE AND WATER BOARD OF NEW ORLEANS

CONTRACT N□. 1369

HMGP EMERGENCY FUEL STORAGE
RETROFIT POWER PLANT
MAIN WATER PURIFICATION PLANT POWER COMPLEX

THIS DOCUMENT ORIGINALLY ISSUED AND SEALED BY LISBETH HABANS NAGRATH, LICENCE N□. 36792 ON 2-6-15. THIS DOCUMENT SHOULD NOT BE CONSIDERED A CERTIFIED DOCUMENT.

Trigon
Quality ▲ Commitment ▲ Client Service

TRIGON DWG. NO. CZ-02

TRIGON ASSOCIATES, LLC
1515 POYDRAS STREET
SUITE 2200
NEW ORLEANS, LA 70112
TEL: 504-585-5767
trig□nass□□iat□s.□□m

CIVIL DETAILS

DR:	SJ CLARK
CK:	GA KOLENOVSKY
AP:	LH NAGRATH
LAST EDIT:	
SCALE:	1"□20'-0"
DATE:	JANUARY 28, 2015

GENERAL SUPERINTENDENT

DWG. N□. 12098-W8

SET NO: SHEET NO: 15 OF 72

POST TENSIONED NOTES AND SPECIFICATIONS:

1. GENERAL REQUIREMENTS FOR POST TENSIONED SLAB ON GRADE: THESE NOTES AND SPECIFICATIONS ARE ADDITIONS TO THE SPECIFICATIONS INDICATED ON EACH DRAWING. CONTRACTORS MUST COMPLY WITH THE SPECIFICATIONS AS INDICATED.

   DESIGN DATA:

   SOIL BEARING CAPACITY: 800–1200 PSF

   LIVE LOAD ON THE FOUNDATION: 100 PSF

   DEAD LOAD: AS CALCULATED (VARIES) PSF

   STANDARDS:

   ASTM FOR STEEL

   ASTM A–615 (GRADE 60) REINFORCING STEEL

   ASTM 1557 SOIL COMPACTION

   ACI 318 FOR CONCRETE (LATEST EDITION)

   ACI A–416, TENDONS, DESIGNATED MILL NO. (SALVAGED CABLES NOT ALLOWED.)

   PTI "SPECIFICATIONS FOR UNBONDED TENDONS"

   PTI "DESIGN MANUAL" (LATEST EDITION)

   PTI "DESIGN AND CONSTRUCTION OF POST TENSIONED SLABS

2. SITE PREPARATION: GENERAL CONTRACTOR WILL BE RESPONSIBLE FOR LAYOUT AND VERIFICATION OF DIMENSIONS. TOLERANCES ARE 1/2" +/– AND SOIL PREPARATION. CONTRACTOR WILL BE RESPONSIBLE TO ESTABLISH THE SURVEY ELEVATION AS REQUIRED FOR FEMA WORK AS PER CODE, OR AS INDICATED ON DRAWINGS. CHECK FOR UNDERGROUND UTILITIES, PROTRUSIONS, OPENINGS, INSERTS, PIPES, CONDUITS, THIMBLES, COLUMNS, PINS, ANCHORS, BOLTS, DROPS, OFFSETS, LEDGES, BLOCK OUT, AND OTHER ITEMS SHOWN ON THE DRAWINGS, BEFORE CORRECTING.

3. TENDONS LAYOUT WILL BE AS SHOWN ON THE DRAWINGS. PLASTIC CHAIRS SHALL NOT DAMAGE THE MEMBRANE DURING CONCRETING.

4. SOIL BASE PREPARATION WILL BE IN INCREMENTS OF 6 INCHES COMPACTED TO 95% OF MAXIMUM DENSITY AT OPTIMUM MOISTURE CONTENT. TYPE OF FILL AS SPECIFIED. MIN 6" SAND FILL IS REQUIRED IF NOT SPECIFIED IN DWGS. THE SLAB ON GROUND INCLUDES A MINIMUM FILL, WHILE THE RAISED SLAB REQUIRES FILL THAT HAS A PRE–LOAD TIME AND SETTLEMENT WHERE SPECIFIED. CONSULT CITY REQUIREMENTS FOR FILL IN PLACE. CONTRACTOR MUST INFORM ENGINEER IF ANY CHANGE TO THE FILL IS MADE.

5. SOIL INFORMATION: CONTRACTOR WILL CONSULT THE SOIL BORING REPORT WHERE SUBMITTED, OBTAINED BY: PSI DATED: 7 MARCH 2014. THE SOIL BEARING CAPACITY INDICATED IS: 800–1200 PSF. THE SOIL PREPARATION WILL INCLUDE TOP SOIL REMOVAL AS SPECIFIED, UPON WHICH WILL BE PLACED SPECIFIED GRANULAR FILL TO BE COMPACTED TO 95% AT OPTIMUM MOISTURE (FOR SAND FILL).

6. THE OWNER'S SUPERVISOR WILL REQUIRE TESTING NECESSARY TO CONFIRM THE SPECIFIED LOADINGS. THE SOIL PREPARATION LOADS SHOULD BE MINIMUM OR BETTER THAN SPECIFIED. CONTRACTOR TO SUBMIT RECORDS TO ENGINEER.

7. CONTRACTOR WILL FOLLOW THESE SPECIFICATIONS AND OTHER WHERE SUBMITTED. CONTRACTOR MUST RECORD ALL PROCEDURES, TENSIONS, AND DEVIATIONS, WHICH WILL BE SUBMITTED TO THE ENGINEER DURING THE TENSIONING WORK. QUALITY CONTROL WILL BE THE RESPONSIBILITY OF THE CONTRACTOR REGARDLESS OF ANY OWNER REPRESENTATIVE PRESENCE.

8. MATERIALS CONCRETE MIX: CONTRACTOR TO SUBMIT DESIGN MIX AS SPECIFIED ON DRAWINGS. INDICATE MIX BELOW (SAMPLE): (CALCIUM CHLORIDE ADMIXTURES AND FLY ASH NOT ALLOWED) (CONCRETE SEALING MUST BE DONE WITH CONCRETE COMPOUND)

   SACKS PER CUBIC YARD: 5.9 SACKS/CY

   WATER PER CUBIC YARD: 30 GALLONS/CY

   CONCRETE STRENGTH AFTER 28 DAYS: 3,500 PSI

   CONCRETE STRENGTH BEFORE STRESSING: 1,500 PSI

   MINIMUM CURING TIME 5 DAYS, UNDER FAVORABLE WEATHER

   6 MILS PE MEMBRANE WILL BE USED AS SPECIFIED

9. THERMAL CRACKING REDUCTION WILL BE MITIGATED WITH THE INSTALLATION OF THE 6X6 W2.9XW2.9 MESH, INSTALLED 1" BELLOW THE FINISH TOP OF THE SLAB IN THE SLAB AREA. WELDED WIRE FABRIC WILL CONFORM WITH ASTM A185, PROVIDING FOR 9" AT THE END LAPS AND 3" FOR THE SIDE LAPS.

10. POST TENSION WORK WILL COMPLY WITH PTI SPECS (LATEST EDITION). TENDONS: 7 STRESS RELIEVED STRANDS, COATED, CASES IN PE PLASTIC (ALLOW 8" X 36" CLEARANCE FOR STRESSING EQUIPMENT). ULTIMATE STRESS: 270 KSI, FOR TYPICAL TENDON'S STRESSING:

1/2 INITIAL STRESSING	33.0K
ANCHORED STRESS	28.9K
7/16 INITIAL STRESSING	24.8K
ANCHORED STRESS	21.7K
3/8 INITIAL STRESSING	21.7K
ANCHORED STRESS	16.1K
SHORT TENDONS OVER	20%

    STRESS

    (STRESSING MODIFICATIONS PERMITTED ONLY IF APPROVED BY ENGINEER.) NO ACTIVE LOADING IS PERMITTED PRIOR TO STRESSING.

11. REQUIREMENTS PRIOR TO STRESSING: REMOVE FORMS 6 DAYS AFTER CONCRETING, CHECK MIN. CONCRETE STRENGTH, CONCRETE MAY SHOW MINOR CRACKS THOSE WILL BE CLOSED POST STRESSING.

12. POST TENSION STRESSING SAMPLE CALCULATIONS (NOTES ON ELONGATION):

    CONTRACTOR WILL INFORM THE ENGINEER OF THE TENSIONING FORCES RELATIVE TO OBTAINED ELONGATIONS. WHERE ELONGATION IS NOT ACHIEVED AS PER ADJUSTMENT, CONTRACTOR WILL CHECK THE PHYSICAL PROPERTIES OF THE CABLES AND WILL COMPARE TO THE MODULUS AND ELONGATION CALCULATED. PT CONTRACTOR MUST CALCULATE THE ELONGATION AS FOLLOWS: LENGTH OF THE CABLE IN FEET TIMES 9.37%F. FOR EXAMPLE: 100FT X 9.37%/100 = 9.37 ELONGATION.

13. SUBMITTALS: DESIGN CALCULATIONS BASED ON ARCHITECTURAL BUILDING DESIGN, PSF LL, PSF DL, WIND LOADS AS PER CODES. ALL COMPUTATIONS MUST INDICATE ELONGATION EXPECTED FROM THE POST TENSIONING.

14. SHOP DRAWINGS, DETAILS, COMPONENTS OF THE CONSTRUCTION METHODOLOGY OF STRESSING,PROFILES OF TENDONS, AND OTHER QUALITY CONTROL PROCEDURES MUST BE SUBMITTED TO THE ENGINEER FOR APPROVAL.

    TESTS AND CERTIFICATIONS: CERTIFIED MILL REPORTS FOR PRE STRESSING CABLES MUST BE SUBMITTED TO THE ENGINEER. OTHER DATA INCLUDED MUST CERTIFY: THE CABLE'S ULTIMATE STRENGTH, MODULUS OF ELASTICITY, AND PERCENT ELONGATION AT RUPTURE IN COMPLIANCE WITH THE DESIGN CALCULATIONS. ALL TENDONS MUST BE MARKED WITH THE MILL CERTIFICATION NUMBER.

15. MATERIALS: POSTTENSIONING STEEL WILL BE SEVEN–WIRE LOW RELAXATION STRAND IN ACCORDANCE WITH ASTM A416, GRADE 270 (LATEST EDITION) ULTIMATE TENSILE STRENGTH WILL NOT BE LESS THAN 270 KSI.

    ANCHORS: THE APPROVED ANCHORS MUST MEET SPECIFICATIONS.

    ALL ANCHORS AND THEIR USE MUST MEET THE "SPECIFICATIONS FOR UNBONDED TENDONS", AS PREPARED BY THE POST TENSION INSTITUTE.

    COATING MUST BE RUST PREVENTATIVE AND LUBRICANT APPLICATION AS PER LATEST PTI REQUIREMENTS. SHEATHING MUST BE PE PLASTIC, MINIMUM 0.025 INCHES THICK AND CAPABLE OF SUSTAINING 180 DEG F TEMPERATURE. THERE SHALL BE NO VISIBLE DAMAGE DONE TO THE PLASTIC SHEATHING SUCH AS CRACKS, BLISTERS AND OTHER IMPERFECTIONS.

16. EQUIPMENT: HYDRAULIC JACKS MUST HAVE ACCURATE READING, INDEPENDENTLY TESTED AND CALIBRATED HYDRAULIC PRESSURE GAUGES. THE SHEATHING CAN BE CUT TO A MINIMUM LENGTH NECESSARY FOR THE GRIP ON THE CABLE NOT TO BE EXCEED 6 INCHES.

17. CONTRACTORS QUALIFICATIONS: CONTRACTOR MUST PROVE A MINIMUM OF 3 YEARS OF EXPERIENCE IN FIELD OF POSTTENSIONING. QUALIFIED SUPERINTENDENT MUST SUPERVISE THE WORK AND ASSURE FOR QUALITY WORKMANSHIP. SUPERINTENDENT MUST SCHEDULE THE TENSIONING PROCEDURES TO COMPLY WITH THE REQUIREMENTS FOR TENSIONING 5 DAYS AFTER THE CONCRETE WORK WAS PLACED AFTER A MINIMUM SPECIFIED STRENGTH WAS OBTAINED FROM THE SAMPLES TESTED. INTERMEDIATE JOINT POSTTENSIONING WILL BE TENSIONED UNDER THE SAME CONDITION. ANY CHANGES FOR POSTTENSIONING SCHEDULE MUST BE APPROVED BY THE ENGINEER. 1) ELONGATION MEASUREMENTS, 2) STRESSES MEASURED DURING ELONGATION AND 3) GAUGE PRESSURES.

CONCRETE AND REINFORCING STEEL NOTES:

1. STANDARDS:

   ACI: 301, 315, 318

   REBAR: ASTM A615–GRADE 60

   WELDED REINFORCEMENT STEEL: ASTM A706, GRADE 60

   WIRE FABRIC WELDED: ASTM A185

   STEEL FIBER: ASTM A820, TYPE I

CLASS	F'C (PSI)	REQUIREMENTS
CONCRETE FOOTINGS, PIERS, INTERIOR CONCRETE (NOT POST TENSION)	3,000	
EXTERIOR CONCRETE (NOT POST TENSION)	4,000	
MASONRY GROUT	3,000	
EARTH FILL	2,000	COMPACT TO 95% AT OPTIMUM MOISTURE

2. MIN. MESH REINFORCING WHERE NO OTHER IS SPECIFIED WILL BE 6X6X–W1.4X1.4 WWF INSTALLED SIMILAR TO REBAR.

3. MIN. WALL REINFORCEMENT:

WALL THICKNESS	HORIZONTAL	VERTICAL
8–INCH	#4 AT 12" ON CENTER	#4 AT 18" ON CENTER
10–INCH	#4 AT 10" ON CENTER	#4 AT 16" ON CENTER
12–INCH	#4 AT 16" ON CENTER	#4 AT 18" ON CENTER

4. 2–#5 REBAR AT ALL OPENINGS MIN. EXTENDED 2' BEYOND ENDS OF OPENING.

5. STAGGER SPLICES 40 DIAMETERS WHERE ALLOWED.

6. WHERE CONTRACTOR JOINTS SPECIFIED AT MAX. 45' KEYED EXPANSION JOINTS USE 1'' COMPRESSIBLE FILLER AND WATERSTOP.

7. CLASS B TENSION LAP SPLICES FOR HORIZONTAL AND VERTICAL REINFORCING ARE ALLOWED. NO SPLICES IN BEAMS, JOISTS OR SLAB STEEL IS PERMITTED, COMPRESSION SPLICES LAP 30 DIAMETERS, TENSION SPLICES PER ACI CODES, WIRE FABRIC LAP 1 SPACE +2" AT ALL EDGES.

8. OPENINGS: IF NOT SPECIFIED AND NEEDED CONTRACTOR MUST OBTAIN APPROVAL FROM THE ENGINEER PRIOR TO CUTTING.

9. LAYOUT AND SHOP DRAWINGS WILL BE THE TOTAL RESPONSIBILITY OF THE CONTRACTOR. DISCREPANCIES WILL BE REPORTED TO THE ENGINEER.

10. STEEL OVERLAP WHERE SPECIFIED, THE LENGTH WILL BE IN ACCORDANCE WITH ACI 318–05, OR AS SHOWN ON THE PLANS.

11. WHERE NOT SHOWN ON THE DRAWINGS THE REINFORCING DETAILS WILL CONFORM WITH TYPICAL "DETAILS AND DETAILING CONCRETE REINFORCEMENT", ACI SP–66.

12. RE–BARS POSITIONING WILL BE PROPERLY ALIGNED AS PER SPECIFIED REQUIREMENTS, WHICH WILL INCLUDE ALL PROPER SUPPORTS TYPICAL FOR CONCRETE WORK. ENGINEER WILL INSPECT PLACEMENT, ORIENTATION, AND POSITION OF REINFORCING PRIOR TO CONCRETE PLACEMENT. CONTRACTOR TO ARRANGE FOR INSPECTION.

13. THE REINFORCING WILL BE ADJUSTED FOR BY PASS OF OBJECTS SUCH AS, PIPES, OPENINGS, AND OTHER OBSTRUCTIONS. SUCH DETAILS WILL BE APPROVED BY THE ENGINEER.

14. REINFORCING WILL BE CONTINUOUS WITH FULL TENSION LAP SPLICES. AT BEAMS AND SLAB ENDS, THE REBAR HOOK AND DETAILING WILL BE IN ACCORDANCE WITH ACI PRACTICES FOR 90 DEGREE BENDING. CORNERS WILL BE INSTALLED WITH "L" BARS AS PER ACI RECOMMENDATIONS. THE ENGINEER WILL APPROVE AND INSPECT THE DETAILS OF SUCH INSTALLATION. CONTRACTOR WILL SUBMIT SHOP DRAWINGS FOR REINFORCING WORK FOR APPROVAL TO THE ENGINEER PRIOR TO FABRICATION.

15. CONSTRUCTION JOINTS WILL BE INSTALLED AS PER DRAWINGS. ANY ADDITIONAL CONSTRUCTION JOINTS WILL BE APPROVED BY THE ENGINEER IF FOUND NECESSARY.

16. PROTRUSIONS THROUGH THE CONCRETE WORK WILL BE WITH SLEEVES OR AS PER DRAWINGS. CONTRACTOR WILL COORDINATE PLACEMENT AND INSTALLATION OF THOSE WITH OTHER TRADES.

17. TYPICAL CHAMFERS, WHERE NOT OTHERWISE SPECIFIED ON THE DRAWINGS, WILL BE 3/4".

18. THE STRENGTH OF THE CONCRETE WILL BE AS SPECIFIED ON THE DRAWINGS, AND WILL GENERALLY BE IN ACCORDANCE WITH THE FOLLOWING: CONCRETE MINIMUM 28 DAY COMPRESSIVE STRENGTH. CAST IN PLACE PILE CAPS, BASE, SLABS, WALLS, PLATFORMS, COLUMNS, PILASTERS, BEAMS AND DECKS, 4,000 PSI CONCRETE STRENGTH. PRECAST CONCRETE, 4,000 PSI FOR BEAMS AND PANELS, AND 3,000 PSI CONCRETE STRENGTH FOR DUCT–BANKS, SIDEWALKS AND BOLLARDS.

19. CONCRETE DESIGN IN ACCORDANCE WITH ACI 301 AND 318, DELIVERED AT THE SITE IN ACCORDANCE WITH "SPECIFICATIONS FOR READY–MIX CONCRETE" ASTM C94.

20. CONCRETE PLACEMENT AND CONSOLIDATION IN ACCORDANCE WITH ACI 304 AND 309, CURED ACI 308, FINISHED ACI 301.

21. WELDED WIRE FABRIC, WHERE INDICATED ON THE DRAWINGS, WILL CONFORM TO ASTM A185 PROVIDING 9" FOR END LAPS AND 6" FOR SIDE LAPS.

22. EPOXY GROUT WILL BE USED AS A NON–SHRINK AND NON–METALLIC GROUT IN ACCORDANCE WITH REQUIREMENTS FOR INSTALLATION EMBEDDED ANCHOR BLOTS, NUTS AND WASHERS, ASTM F1554 OR ASTM A307 FOR HOT DIP GALVANIZED STEEL.

23. CONCRETE COVER WILL BE IN ACCORDANCE WITH ACI 318–05 UNLESS OTHERWISE SPECIFIED ON THE DRAWINGS AND SPECIFICATIONS. THESE CRITERIA WILL BE APPLICABLE TO SLABS, WALLS, BEAMS, AND COLUMNS. WHERE PERMANENT HYDROSTATIC LOADING IS IMPOSED, THE COVER WILL BE 3" IN ACCORDANCE WITH EM 1110–2–2104.

STRUCTURAL STEEL NOTES:

1. THE STABILITY OF THE STRUCTURE IS ASSURED IN ITS COMPLETED STAGE. TEMPORARY SUPPORTS, TEMPORARY GUY WIRES, BRACES, FALSEWORK, CRIBBING OR OTHER ELEMENTS ARE REQUIRED DURING ERECTION UNDER ALL LOADING CONDITIONS. THE CONTRACTOR IS OBLIGATED TO PROVIDE ALL THESE FEATURES.

2. CONTRACTOR MUST COORDINATE ARCHITECTURAL, MECHANICAL, ELECTRICAL, PLUMBING AND CIVIL DRAWINGS FOR INSERTS, SLEEVES, CURBS, PADS, AND ANY OTHER FEATURES AFFECTING STRUCTURAL WORK NOW SHOWN.

3. ALL FABRICATIONS MUST BE APPROVED AS "SHOP DRAWINGS" PRIOR TO FABRICATION AND MUST COMPLY WITH "CODE OF STANDARD PRACTICE FOR STEEL BUILDINGS AND BRIDGES," AS PUBLISHED BY AMERICAN INSTITUTE OF STEEL CONSTRUCTION (AISC), LATEST EDITION.

4. SHOP DRAWINGS WILL BE PREPARED ACCORDING TO THE LATEST "STRUCTURAL STEEL DETAILING MANUAL" OF THE AISC AND SUBMITTED FOR REVIEW PRIOR TO FABRICATION.

5. STRUCTURAL STEEL GENERALLY, IF NOT NOTED OTHERWISE WILL COMPLY WITH ASTM A36 STANDARD FOR STRUCTURAL STEEL, PLATE, BARS, AND CHANNELS, ASTM A993 FOR WIDE FLANGE SHAPES, ASTM A53 GRADE B, FOR STRUCTURAL PIPES, ASTM A500 GRADE B OR A501 FOR STRUCTURAL TUBING BOLTS: ASTM A325. WELDING ELECTRODES: AWSA 5.1 OR 5.5 SERIES E70 ALL WELDING WILL BE ELECTRIC, TECHNIQUE AND WORKMANSHIP TO CONFORM TO THE AMERICAN WELDING SOCIETY AWS D1.1 USE E70XX ELECTRODES. WELDERS MUST BE CERTIFIED. THE WELDING SYMBOLS ARE TO INDICATE THE SIZE AND TYPE OF THE WELDS. THE SHOP DRAWINGS WILL SHOW A COMPLETE DETAIL FOR WELDING WHICH WILL BE SUBMITTED FOR APPROVAL PRIOR TO CONSTRUCTION BY CONTRACTOR.

6. STRUCTURAL STEEL IN CONFORMANCE WITH "SPECIFICATIONS FOR STRUCTURAL STEEL BUILDINGS– ALLOWABLE STRESS DESIGN AND PLASTIC DESIGN" OF AISC, LATEST EDITION. BEAMS WITHOUT SPECIFIED CAMBER MUST BE FABRICATED SO THAT AFTER ERECTION ANY CAMBER DUE TO ROLLING OR SHOP FABRICATION IS UPWARD AT MID SPAN.

7. PAINTING AND PROTECTION OF THE STEEL STRUCTURES WILL CONFORM TO THE SPECIFICATIONS AS NOTED IN THE STEEL SECTION. PAINT AND PROTECTION: PRIME COAT (TOUCH UP AFTER ERECTION), SPRAY ON FIREPROOFING ON STEEL. WHERE REQUIRED ITEMS FOR HOT–DIPPED GALVANIZATION WILL INCLUDE THE FOLLOWING: A. ITEMS INCLUDED ON THE DRAWING, AND MISCELLANEOUS INCIDENTAL ITEMS NECESSARY FOR UNIFORMITY OF STEEL CONNECTIONS TO PREVENT CORROSION, ALL IN CONFORMANCE WITH THE SPECIFICATIONS.

8. STEEL WELDED CONNECTIONS MUST BE WELDED, BOLTED OR BOTH. MEMBERS CONNECTED IN THE SHOP THAT ARE WELDED AND BOLTED, IF NOT NOTED OTHERWISE, WILL BE BOLTED WITH 3/4"ØA–325 HIGH STRENGTH BOLTS. ALL SUCH CONNECTIONS WILL BE AS PER DESIGN HALF OF THE ALLOWABLE UNIFORM LOAD, UNLESS OTHERWISE NOTED. MINIMUM OF TWO 3/4"Ø BOLTS WILL BE APPLIED PER CONNECTION. BOLTED CONNECTIONS WILL BE ASSEMBLED AND TESTED ACCORDING TO SPECIFICATION FOR STRUCTURAL JOINTS USING ASTM A325 OR ASTM A490 BOLTS.

9. ALL STEEL JOISTS MUST BE FABRICATED TO RESIST A NET WIND UPLIFT FORCE AS PER 170 MPH UPLIFT CALCULATION REQUIREMENTS APPLIED OVER THE ENGAGED AREA. ALL BOLTED CONNECTIONS WILL BE SHEAR BEARING TYPE. DESIGN CONNECTIONS TO A FULL MEMBER CAPACITY, AND SHOW IT ON THE SHOP DRAWINGS.

10. TESTING: INDEPENDENT TESTING LABORATORY, WHERE SPECIFIED, WILL BE DONE ON ALL CRITICAL WELDS AND 25% ON NON–CRITICAL. FULL PENETRATION WELDS ARE CONSIDERED CRITICAL WELDS AND THOSE SPECIFIED AS MOMENT CONNECTION WELDS. MILL REPORTS WILL BE PROVIDED TO IDENTIFY THE MATERIAL. A235 & A490 BOLTS – PROVIDE FOR BOLT INSPECTIONS.

11. STEEL ANCHORS AND DRILLED CONNECTIONS:

    DRILLED ANCHORS TO CONCRETE WILL BE WEDGE TYPE WITH ONE PIECE WRAP AROUND.

    ANCHORS WILL BE GALVANIZED AS FOLLOWS:

ANCHOR SIZE	MIN EMBEDMENT	PULLOUT (LBS)	SHEAR (LBS)
1/4"Ø	2"	550	590
3/8"Ø	2–1/2"	1050	1300
1/2"Ø	3–1/2"	1700	2200
5/8"Ø	4"	2400	3300
3/4"Ø	4–3/4"	3250	4650
1"Ø	6"	6400	7470

    LOADS INDICATED ARE SERVICE LOADS IN LBS FOR STAINLESS STEEL ANCHORS AT 3,000 PSI CONCRETE.

12. MISCELLANEOUS STEEL WORK ITEMS: OPENING CUT WILL EXCEED 15% OF THE SECTION WITHOUT SPECIAL REINFORCEMENT. MECHANICAL CONTRACTOR'S WORK AND TIES WITH THE STEEL MEMBERS TO BE RECONCILED. NON–SHRINKING GROUT CRD–C621 ASTM C1107, WILL BE USED UNDER BEARING PLATES, TEMP. RANGE 45° TO 90° AND 30 MINUTES WORKING TIME. BELOW GRADE STEEL PROTECTION 3" OF CONCRETE AND 4" MASONRY, PROVIDE 1/4" THICK SETTING PLATES AT BEAMS BEARING ON MASONRY OR CONCRETE. THE PLATE 2–3/8Ø X 6" HEADED STUDS SHOP WELDED TO THE PLATE AND EMBEDDED TO THE WALL. USE HEAVY WASHER AT ALL ANCHOR BOLTS. ANGLE SUPPORTS FOR ALL METAL DECK RIBS AT COLUMNS. COORDINATE THE MACHINING DIMENSIONS WITH THE SHOP DRAWINGS AND COORDINATE ANY DISCREPANCY WITH THE ENGINEER.

13. WHERE STEEL H–PILINGS IS USES WILL BE IN ACCORDANCE WITH ASTM A572, GR. 50 OR AS PER SPECIFIC INSTRUCTIONS ON THE DRAWINGS.

STRUCTURAL DESIGN CRITERIA:

A. IBC 2012, ASCE–7–10, MINIMUM DESIGN LOADS:
   BASIC WIND SPEED 170MPH
   IBC 2012, 1609B, CATEGORY IV BUILDING
   *STRUCTURAL DESIGN CALCULATED TO MEET WIND SPEED 170 MPH WITH CONSIDERATION OF ROUND TANK OBJECTS
B. ACI 318 FOR CONCRETE (LATEST EDITION)
C. ASTM FOR STEEL

REV.	DATE	DESCRIPTION	BY
A	10–25–19	AS–BUILT MARKUPS	LHN

(A) POST TENSION NOTES AND SPECIFICATIONS REPLACED ENTIRELY WITH THE VECP DESIGNED BY CARUBBA ENGINEERING. CONCRETE AND REINFORCING NOTES AND STRUCTURAL NOTES REPLACED WITH CARUBBA ENGINEERING DESIGN OF THE VECP ONLY AS THESE NOTES RELATE TO THE WORK INCLUDED IN THE VECP. SEE SUL–0159 FOR VECP DESIGN.

THIS DOCUMENT ORIGINALLY ISSUED AND SEALED BY IVAN MANDICH, LICENCE No. 15570 ON 2-6-15.

Trigon
Quality ▲ Commitment ▲ Client Service

TRIGON DWG. NO. SA-01

TRIGON ASSOCIATES, LLC
1515 POYDRAS STREET
SUITE 2200
NEW ORLEANS, LA 70112
TEL: 504-585-5767
trigonassociates.com

SEWERAGE AND WATER BOARD OF NEW ORLEANS

CONTRACT No. 1369

HMGP EMERGENCY FUEL STORAGE
RETROFIT POWER PLANT
MAIN WATER PURIFICATION PLANT POWER COMPLEX

STRUCTURAL GENERAL NOTES

DR:	SJ CLARK
CK:	GA KOLENOVSKY
AP:	LH NAGRATH
LAST EDIT:	
SCALE:	1"=20'-0"
DATE:	JANUARY 28, 2015

GENERAL SUPERINTENDENT

DWG. No. 12098-W8

SET NO: SHEET NO: 16 OF 72

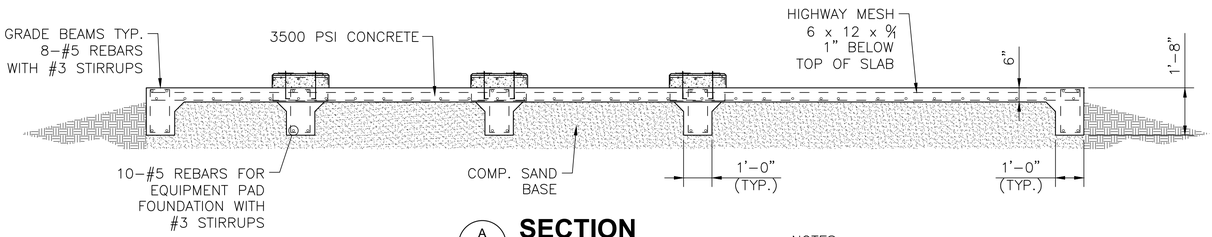

A / - **SECTION**

SCALE: 3/8"=1'-0"

NOTES:
1. SUBMIT FOUNDATION PLAN TO ENGINEER PER MANUFACTURERS REQUIREMENTS.
2. MAXIMUM SPACING BETWEEN GRADE BEAMS IS 20 FEET.
3. EQUIPMENT PADS/FOUNDATION TO BE PROVIDED UNDER EQUIPMENT AND ELECTRICAL/CONTROLS SUPPORTS. LAYOUT AND SIZE MAY BE ADJUSTED ACCORDING TO EQUIPMENT REQUIREMENTS AT NO ADDITIONAL COST TO THE OWNER.

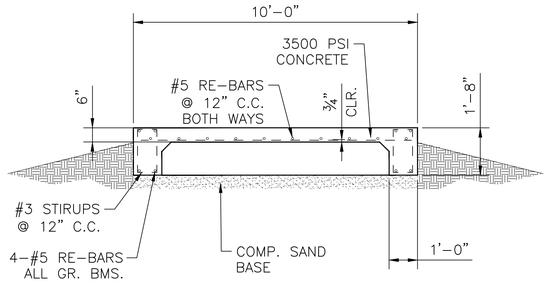

B / - **SECTION**

SCALE: 3/8"=1'-0"

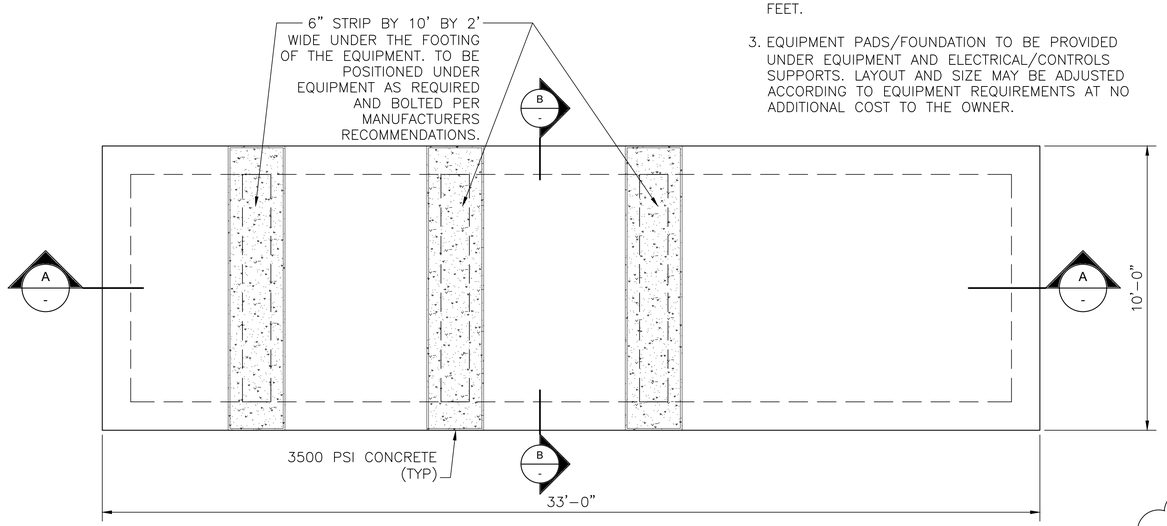

FIRE SUPPRESSION SYSTEM FOUNDATION - PLAN

SCALE: 3/8"=1'-0"

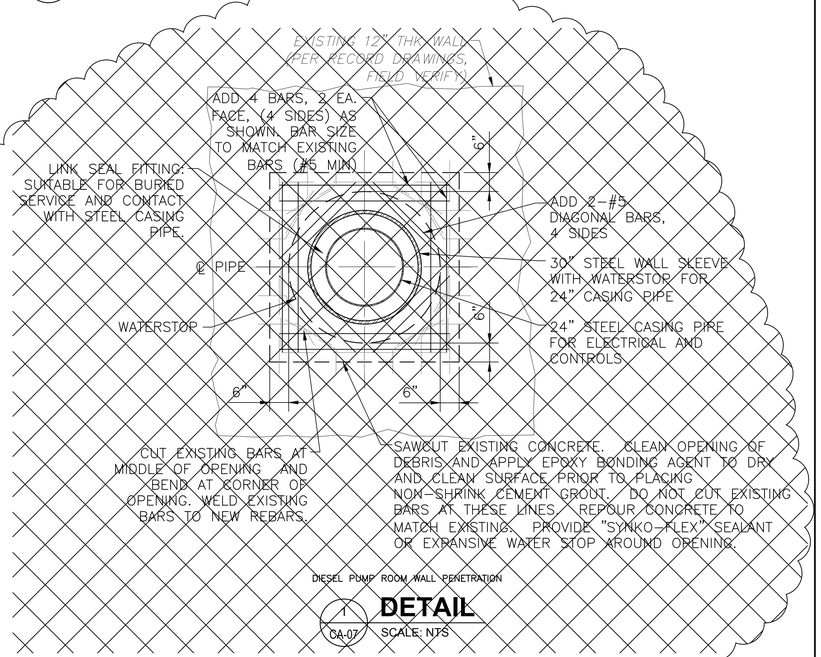

DIESEL PUMP ROOM WALL PENETRATION

1 / CA-07 **DETAIL**

SCALE: NTS

SEE SUL–0243 FOR HAND SKETCHED RECORD DRAWINGS. JACK AND BORE REPLACED WITH OPEN CUT PER FCO–009/RFQ–001. LINKSEAL INSTALLED ON INSIDE AND OUTSIDE OF DIESEL PUMP ROOM.

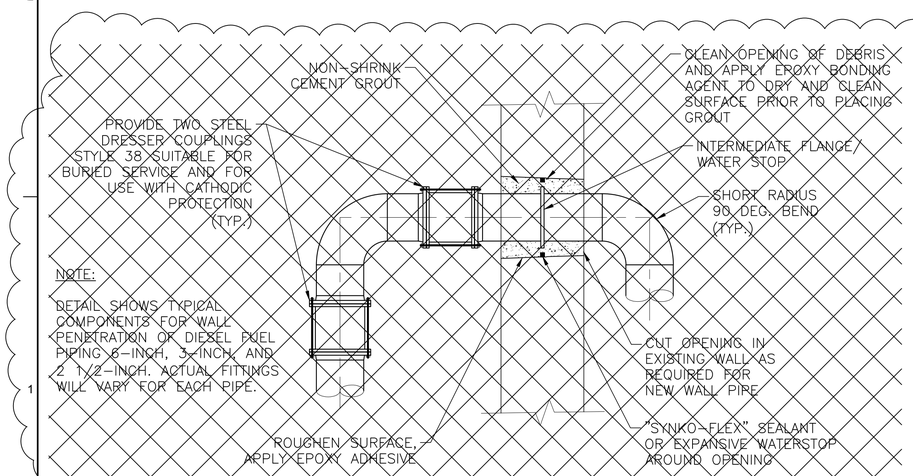

DETAIL - DIESEL PUMP ROOM WALL PENETRATIONS

2 / X

SCALE: NTS

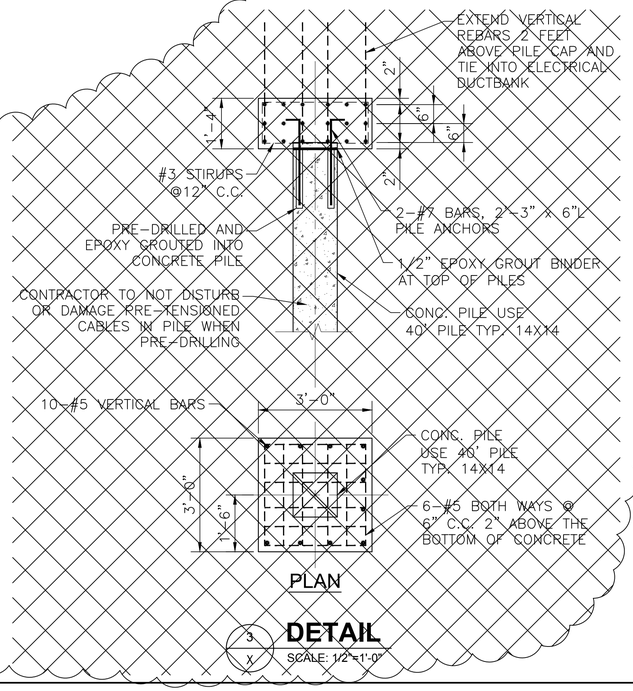

PLAN

3 / X **DETAIL**

SCALE: 1/2"=1'-0"

REV.	DATE	DESCRIPTION	BY
A	10-25-19	AS-BUILT MARKUPS	LHN

SEWERAGE AND WATER BOARD OF NEW ORLEANS

CONTRACT No. 1369

HMGP EMERGENCY FUEL STORAGE
RETROFIT POWER PLANT
MAIN WATER PURIFICATION PLANT POWER COMPLEX

FIRE SUPPRESSION AND WALL PENETRATIONS

THIS DOCUMENT ORIGINALLY ISSUED AND SEALED BY IVAN MANDICH, LICENCE No. 15570 ON 2-6-15. THIS DOCUMENT SHOULD NOT BE CONSIDERED A CERTIFIED DOCUMENT.

Trigon
Quality ▲ Commitment ▲ Client Service

TRIGON ASSOCIATES, LLC
1515 POYDRAS STREET
SUITE 2200
NEW ORLEANS, LA 70112
TEL: 504-585-5767

trigonassociates.com

TRIGON DWG. NO.	SA-02
DR:	SJ CLARK
CK:	GA KOLENOVSKY
AP:	LH NAGRATH
LAST EDIT:	
SCALE:	1"=20'-0"
DATE:	JANUARY 28, 2015
DWG. No.	12098-W8
SET NO:	
SHEET NO:	17 OF 72

GENERAL SUPERINTENDENT

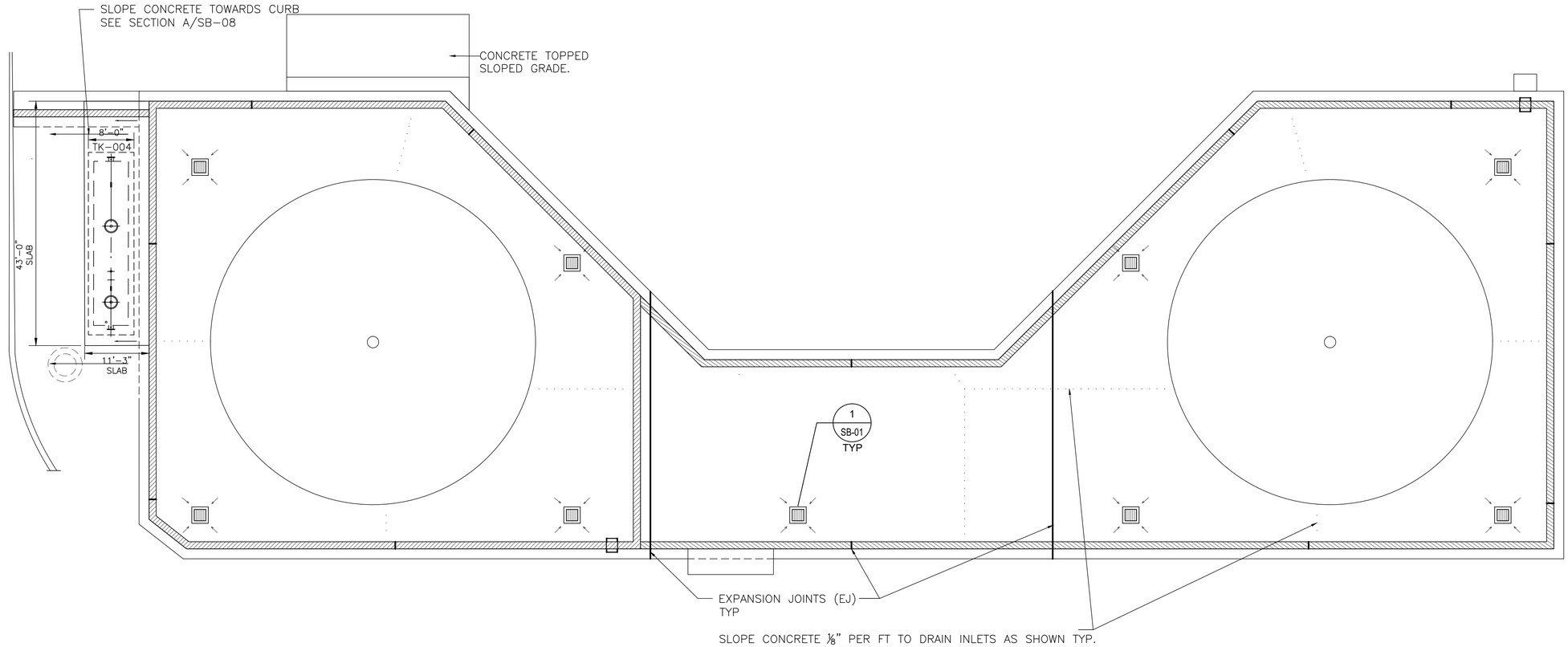

SLOPING PLAN

SCALE:3/32"□1'-0"

LEGEND:

HIGHEST EL FROM DRAIN INLET

DRAIN INLET, TYP OF 9
FLOOR EL 22.00

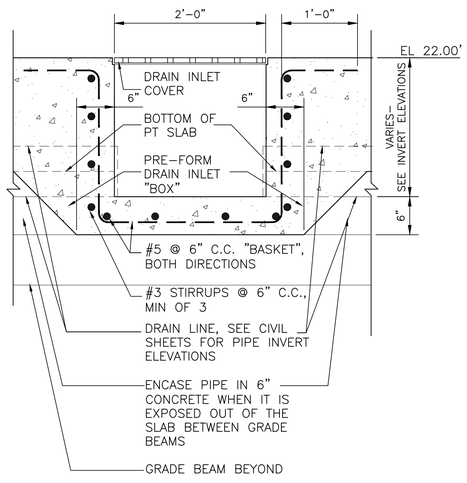

A SB-01 **SECTION- DRAIN INLET**

SCALE:1"□1'-0"

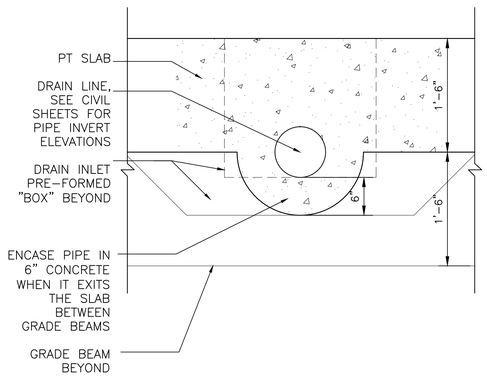

B SB-01 **SECTION- DRAIN INLET**

SCALE:1"□1'-0"

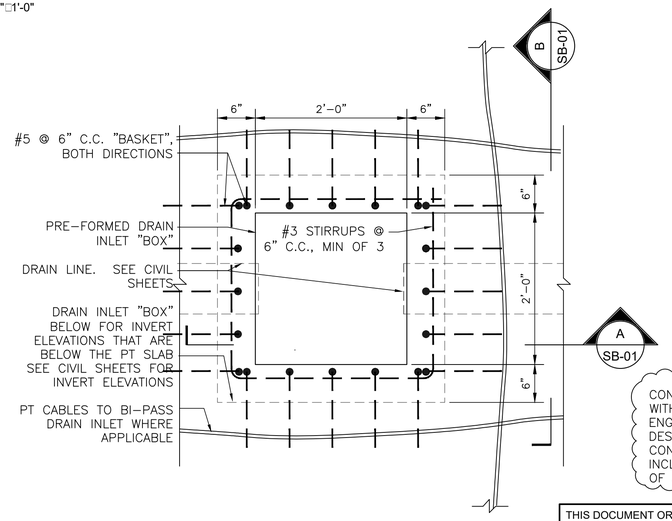

1 SB-01 **PLAN- DRAIN INLET**

SCALE:1"□1'-0"

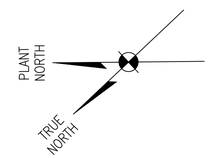

NOTES:

1. SLOPING OF POST TENSION CONCRETE SLAB TO BE ACHIEVED INTEGRAL AS PART OF THE INITIAL POUR.
2. 6x6 WW MESH W2.9xW2.9; MUST BE 1 INCH BELOW THE TOP OF SLAB, AS SLOPED, TYP.

REV.	DATE	DESCRIPTION	BY
A	10-25-19	AS-BUILT MARKUPS	LHN

A CONCRETE CONTAINMENT DESIGN REPLACED WITH VECP DESIGNED BY CARRUBA ENGINEERING, SEE SUL-0159 FOR VECP DESIGN. AS-BUILT DRAWINGS FOR CONTAINMENT PROVIDED BY RLH ARE INCLUDED AS AN APPENDIX TO THIS SET OF AS-BUILT DRAWINGS.

THIS DOCUMENT ORIGINALLY ISSUED AND SEALED BY IVAN MANDICH, LICENCE N□ 15570 ON 2-6-15.

Trigon
Quality ▲ Commitment ▲ Client Service

TRIGON DWG. NO. SB-01

TRIGON ASSOCIATES, LLC
1515 POYDRAS STREET
SUITE 2200
NEW ORLEANS, LA 70112
TEL: 504-585-5767
trig□nass□□at□s.□□m

SEWERAGE AND WATER BOARD
OF NEW ORLEANS

CONTRACT N□ 1369

HMGP EMERGENCY FUEL STORAGE
RETROFIT POWER PLANT
MAIN WATER PURIFICATION PLANT POWER COMPLEX

FUEL STORAGE TANK AREA SLOPING PLAN

DR:	K MCALLISTER
CK:	I MANDICH
AP:	I MANDICH
LAST EDIT:	
SCALE:	AS NOTED
DATE:	JANUARY 28, 2015

GENERAL SUPERINTENDENT

DWG. N□ 12098-W8

SET NO: SHEET NO: 18 OF 72

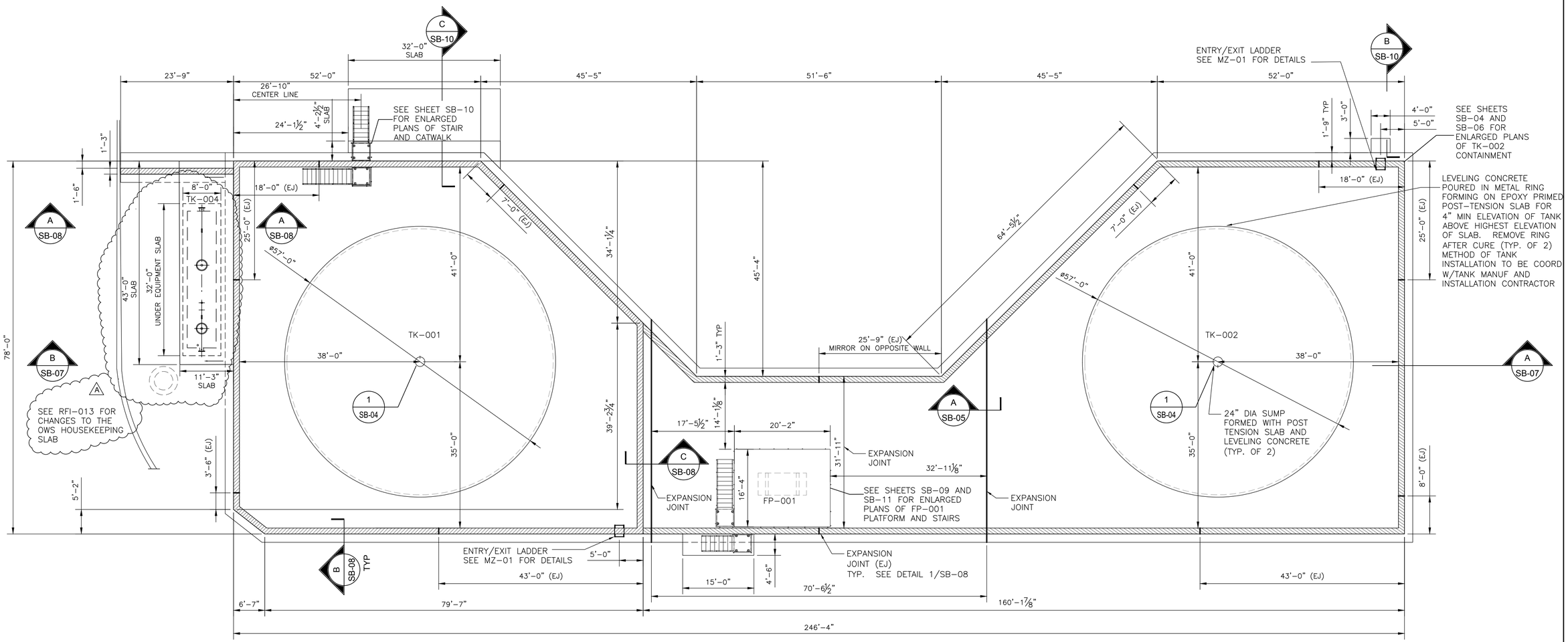

PLAN

SCALE:3/32"=1'-0"

NOTES:

1. SIZE OF OWS IS APPROXIMATE. SLAB UNDER EQUIPMENT SHALL ACCOMMODATE MANUFACTURER SIZING, RECOMMENDATIONS, AND PENETRATIONS THROUGH THE SLAB. CONTRACTOR TO VERIFY INSTALLATION MEANS AND METHODS W/TANK MANUFACTURER.

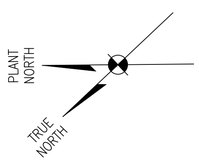

REV.	DATE	DESCRIPTION	BY
A	10-25-19	AS-BUILT MARKUPS	LHN

A CONCRETE CONTAINMENT DESIGN REPLACED WITH VECP DESIGNED BY CARRUBA ENGINEERING, SEE SUL-0159 FOR VECP DESIGN. AS-BUILT DRAWINGS FOR CONTAINMENT PROVIDED BY RLH ARE INCLUDED AS AN APPENDIX TO THIS SET OF AS-BUILT DRAWINGS.

SEWERAGE AND WATER BOARD OF NEW ORLEANS

CONTRACT No. 1369

HMGP EMERGENCY FUEL STORAGE RETROFIT POWER PLANT
MAIN WATER PURIFICATION PLANT POWER COMPLEX

FUEL STORAGE TANK AREA PLAN

THIS DOCUMENT ORIGINALLY ISSUED AND SEALED BY IVAN MANDICH, LICENCE No. 15570 ON 2-6-15. THIS DOCUMENT SHOULD NOT BE CONSIDERED A CERTIFIED DOCUMENT.

Trigon
Quality ▲ Commitment ▲ Client Service
TRIGON DWG. NO. SB-02

TRIGON ASSOCIATES, LLC
1515 POYDRAS STREET
SUITE 2200
NEW ORLEANS, LA 70112
TEL: 504-585-5767
trigonassociates.com

DR.	K MCALLISTER
CK:	I MANDICH
AP:	I MANDICH
LAST EDIT:	
SCALE:	AS NOTED
DATE:	JANUARY 28, 2015

GENERAL SUPERINTENDENT

DWG. No. 12098-W8

SET NO: SHEET NO. 19 OF 72

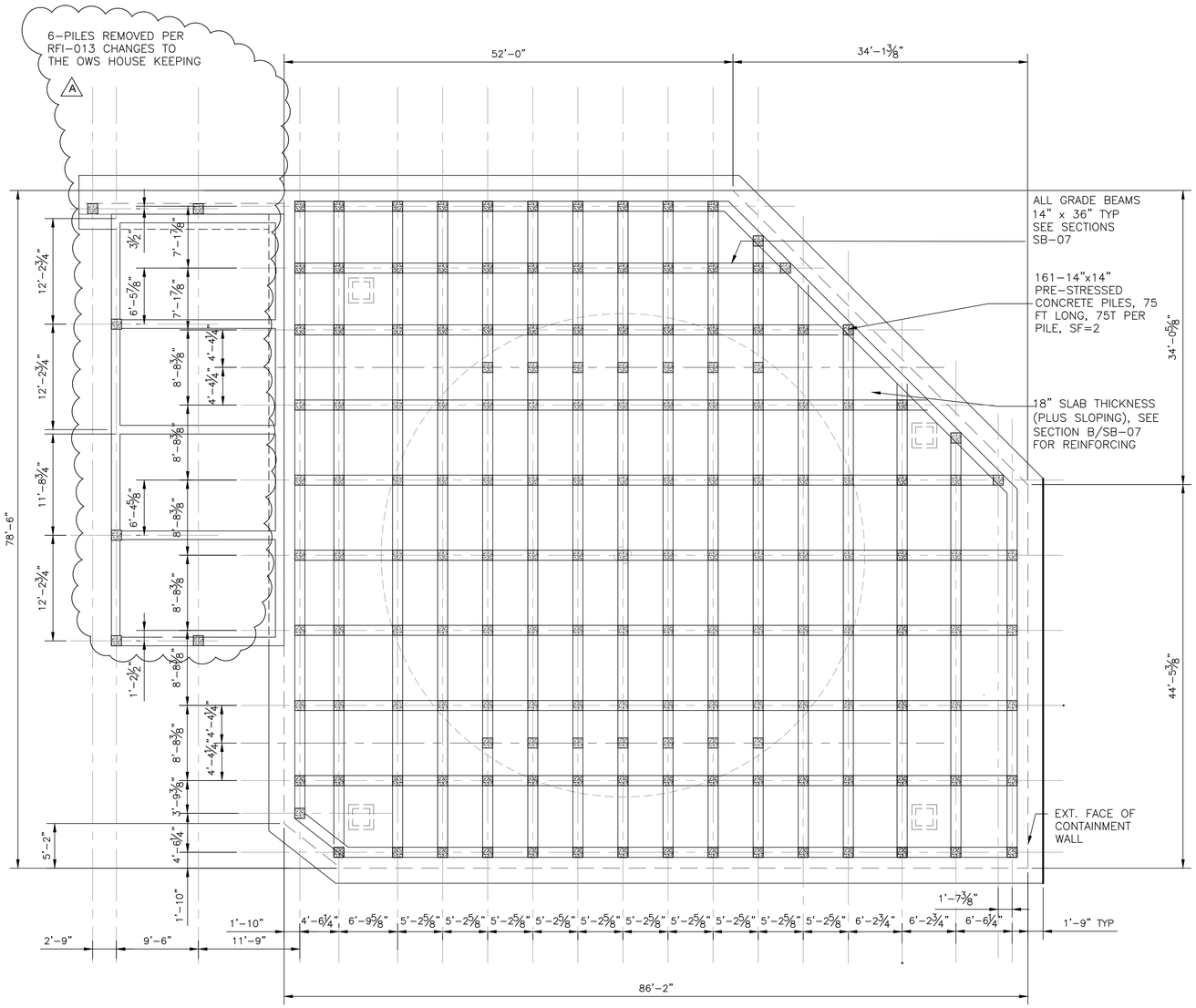

ENLARGED PLAN- FOUNDATION / PILES

SCALE:1/8"□1'-0"

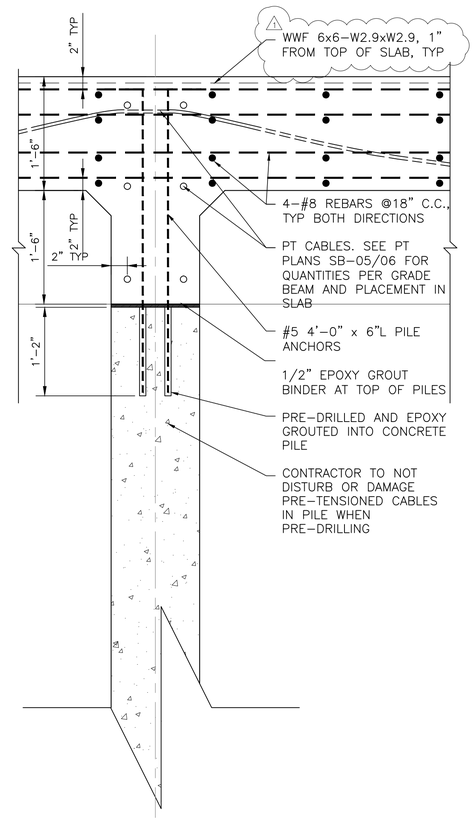

1 SB-07 **DETAIL- PILE**

SCALE:1"□1'-0"

NOTES:

1. SEE SPECIFICATION 31 62 13.19 PRECAST CONCRETE PILES FOR PILE DRIVING: LOCATION OF PILES; PLUMBNESS OF PILES; TOP OF PILE ELEVATION; RECORDATION OF PILE DRIVING.
2. TYP. 14x14 PRE–STRESSED CONCRETE PILES:

   6 TOTAL (TK–004 SLAB), 70' LONG, 50T LOAD CAPACITY, ULTIMATE LOAD CAPACITY 100T/PILE, SF.=2

   161 TOTAL (TK–001 CONTAINMENT), 75' LONG, 75T LOAD CAPACITY. ULTIMATE LOAD CAPACITY 150T/PILE, SF=2

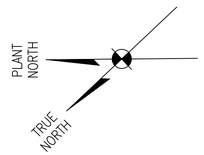

A CONCRETE CONTAINMENT DESIGN REPLACED WITH VECP DESIGNED BY CARRUBA ENGINEERING, SEE SUL–0159 FOR VECP DESIGN. AS–BUILT DRAWINGS FOR CONTAINMENT PROVIDED BY RLH ARE INCLUDED AS AN APPENDIX TO THIS SET OF AS–BUILT DRAWINGS.

REV.	DATE	DESCRIPTION	BY
A	10–25–19	AS–BUILT MARKUPS	LHN
1	3–27–15	REVISED DETAIL "1" CALL–OUT (ADD.4)	ICM

SEWERAGE AND WATER BOARD OF NEW ORLEANS

CONTRACT N□ 1369

HMGP EMERGENCY FUEL STORAGE RETROFIT POWER PLANT
MAIN WATER PURIFICATION PLANT POWER COMPLEX

FUEL STORAGE TANK AREA (TK-001) FOUNDATION PLAN

THIS DOCUMENT ORIGINALLY ISSUED AND SEALED BY IVAN MANDICH, LICENCE N□ 15570 ON 2-6-15. THIS DOCUMENT SHOULD NOT BE CONSIDERED A CERTIFIED DOCUMENT.

Trigon
Quality ▲ Commitment ▲ Client Service

TRIGON DWG. NO. SB-03

TRIGON ASSOCIATES, LLC
1515 POYDRAS STREET
SUITE 2200
NEW ORLEANS, LA 70112
TEL: 504-585-5767
trig□nass□□lat□s.□□m

DR:	K MCALLISTER
CK:	I MANDICH
AP:	I MANDICH
LAST EDIT:	
SCALE:	AS NOTED
DATE:	JANUARY 28, 2015

GENERAL SUPERINTENDENT

DWG. N□. 12098-W8

SET NO: SHEET NO: 20 OF 72

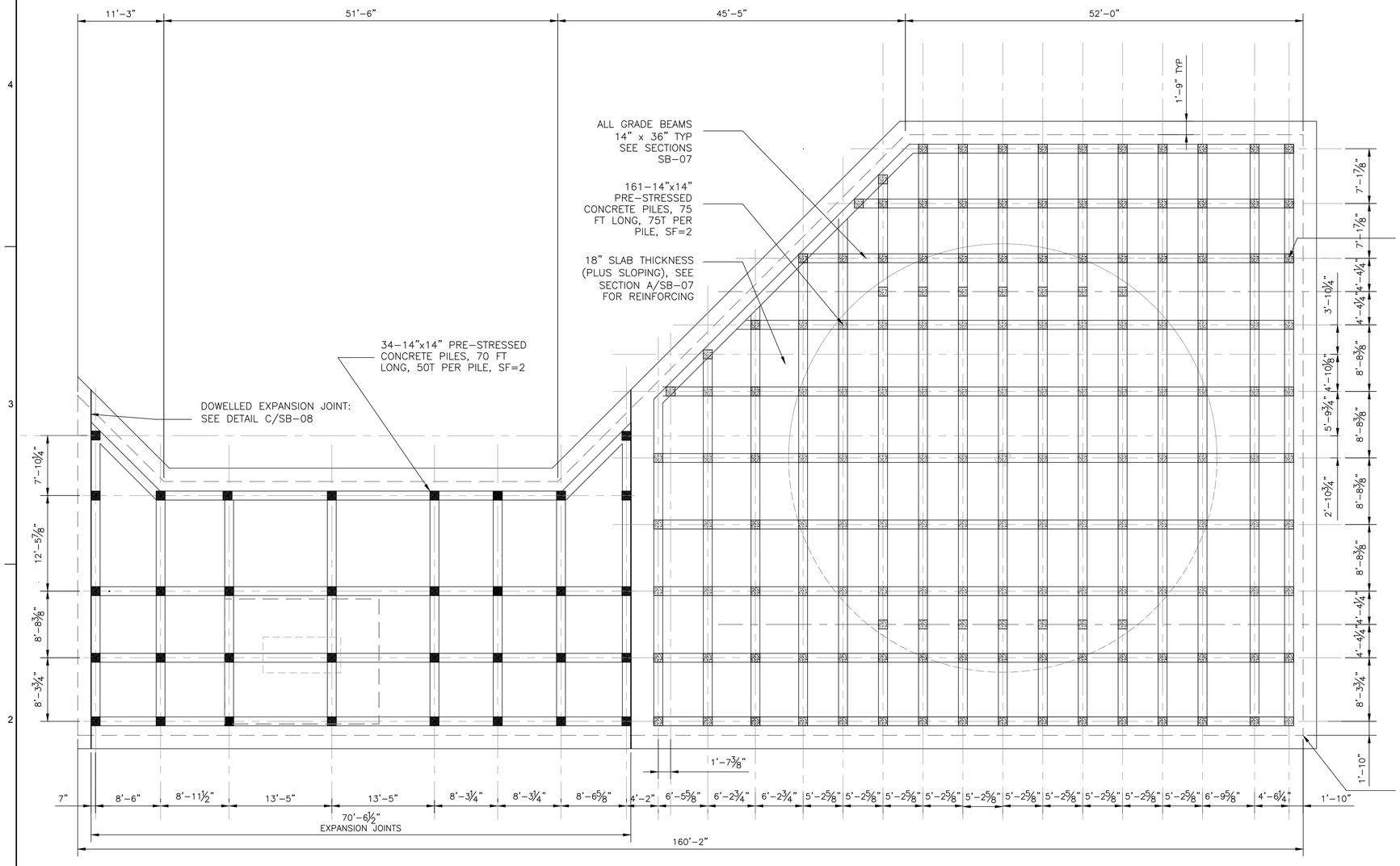

ENLARGED PLAN- FOUNDATION / PILES

SCALE:1/8"=1'-0"

2 SB-07 DETAIL- SUMP, TK-001 / TK-002

SCALE:1-1/2"=1'-0"

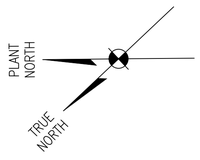

NOTES:

1. SEE SPECIFICATION 31 62 13.19 PRECAST CONCRETE PILES FOR PILE DRIVING.
2. TYP. 14x14 PRE-STRESSED CONCRETE PILES:

   34 TOTAL, 70' LONG, 50T LOAD CAPACITY, ULTIMATE LOAD CAPACITY 100T/PILE, SF.=2

   161 TOTAL (TK-002 CONTAINMENT), 75' LONG, 75T LOAD CAPACITY. ULTIMATE LOAD CAPACITY 150T/PILE, SF=2

REV.	DATE	DESCRIPTION	BY
A	10-25-19	AS-BUILT MARKUPS	LHN
1	3-27-15	REVISED DETAIL "2" CALL-OUT (ADD.4)	ICM

A CONCRETE CONTAINMENT DESIGN REPLACED WITH VECP DESIGNED BY CARRUBA ENGINEERING, SEE SUL-0159 FOR VECP DESIGN. AS-BUILT DRAWINGS FOR CONTAINMENT PROVIDED BY RLH ARE INCLUDED AS AN APPENDIX TO THIS SET OF AS-BUILT DRAWINGS.

SEWERAGE AND WATER BOARD OF NEW ORLEANS

CONTRACT No. 1369

HMGP EMERGENCY FUEL STORAGE RETROFIT POWER PLANT
MAIN WATER PURIFICATION PLANT POWER COMPLEX

FUEL STORAGE TANK AREA- TANK-002 FOUNDATION PLAN

THIS DOCUMENT ORIGINALLY ISSUED AND SEALED BY IVAN MANDICH, LICENCE No. 15570 ON 2-6-15. THIS DOCUMENT SHOULD NOT BE CONSIDERED A CERTIFIED DOCUMENT.

Trigon
Quality ▲ Commitment ▲ Client Service

TRIGON ASSOCIATES, LLC
1515 POYDRAS STREET
SUITE 2200
NEW ORLEANS, LA 70112
TEL: 504-585-5767

trigonassociates.com

TRIGON DWG. NO. SB-04

DR:	K MCALLISTER
CK:	I MANDICH
AP:	I MANDICH
LAST EDIT:	
SCALE:	AS NOTED
DATE:	JANUARY 28, 2015

GENERAL SUPERINTENDENT

DWG. No. 12098-W8

SET NO: SHEET NO: 21 OF 72

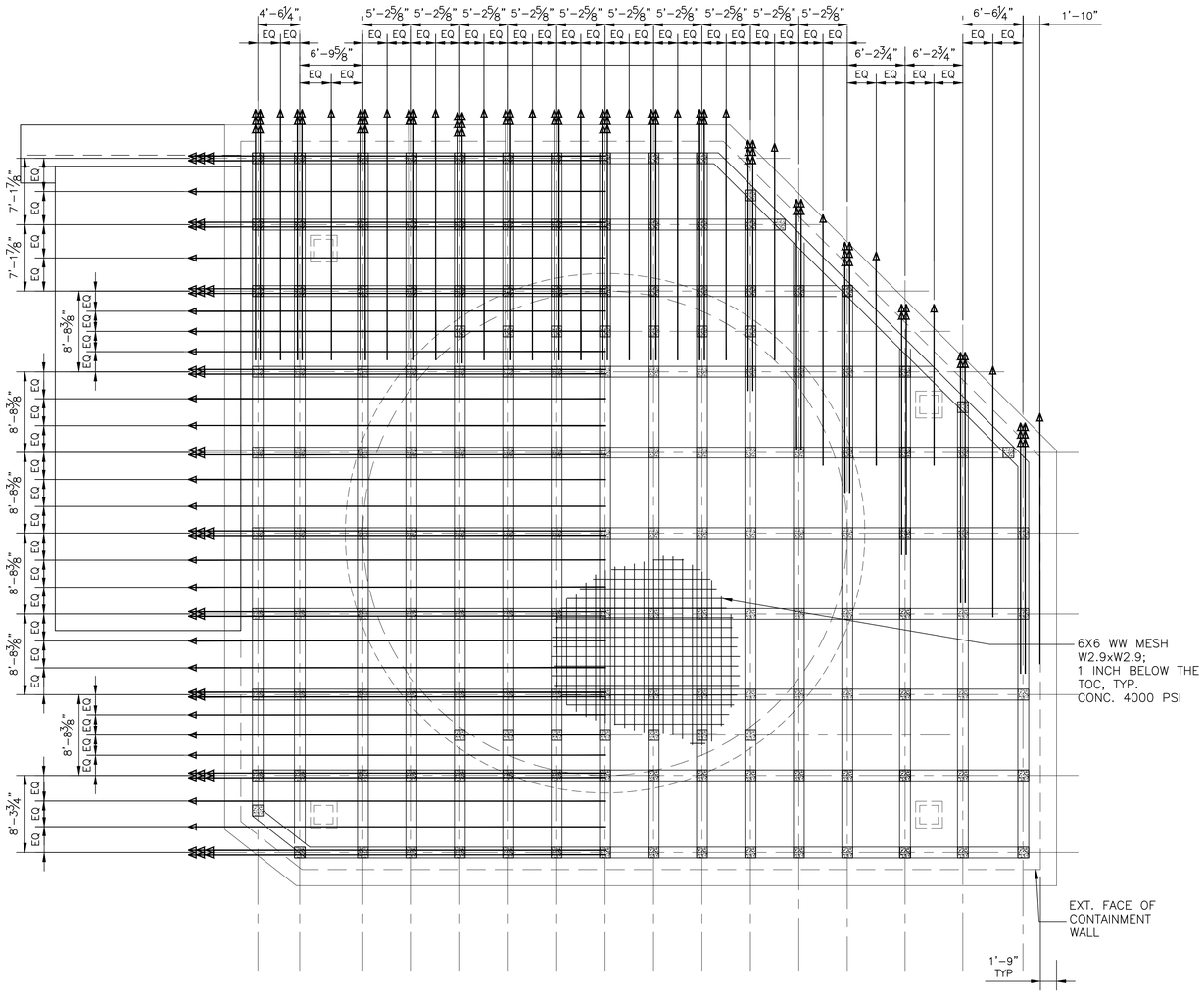

ENLARGED PLAN- POST TENSION

SCALE:1/8"□1'-0"

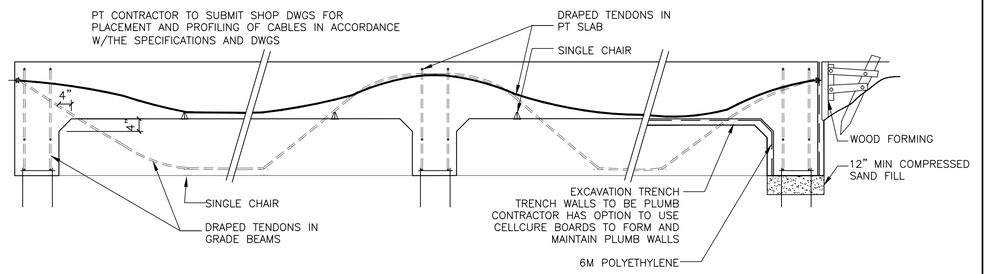

SCHEMATIC TYP POST TENSION INSTALLATION / EXCAVATION

SCALE:1/2"□1'-0"

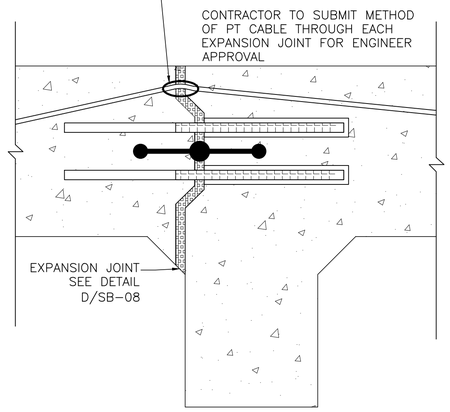

POST TENSION AND EXPANSION JOINTS

A
SB-02

SCALE:1 1/2"□1'-0"

NOTES:

1. SEE SPECIFICATION 03 38 16 POST TENSIONED CONCRETE FOR POST TENSION SLAB
2. CONTRACTOR TO USE CONTINUOUS CABLES, PREPARED FOR THE ENTIRE LENGTH, AND TENSIONED BOTH DIRECTIONS.
3. CONTRACTOR TO USE ANCHORING FROM FACE TO FACE ON THE CONTINUOUS CABLES.
4. MESH 6X6 W2.9xW2.9 WILL BE INSTALLED 1 INCH BELLOW THE TOP OF THE FINISHED SLAB IN THE ENTIRE SLAB AREA.
5. NOTES ON ELONGATION:
   CONTRACTOR WILL INFORM THE ENGINEER OF THE TENSIONING FORCES USED IN OBTAINING THE GIVEN ELONGATION. IF FOUND THAT THE ELONGATION FALLS SHORTER THAN THE PULLING FORCES AS PER CALIBRATED GAUGES, CONTRACTOR WILL PROCEED TO OBTAIN THOSE FORCES. CONTRACTOR TO ACHIEVE THE SPECIFIED ELONGATION. CHECK THE PHYSICAL PROPERTIES OF THE CABLES USED TO MATCH THE MODULUS AND ELONGATION GIVEN.
6. ELONGATION CALCULATIONS SAMPLE:

   PT CONTRACTOR MUST CALCULATE THE ELONGATION AS FOLLOWS:
   LENGTH OF THE CABLE IN FEET TIMES 9.37% AND TENSIONED TO SPECIFICATIONS AND TO THE ALIGNMENT AS SHOWN SEE TYP SECTIONS.

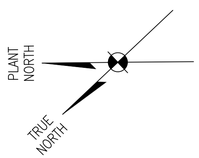

THIS SHEET WAS REPLACED ENTIRELY WITH THE VECP DESIGNED BY CARUBBA ENGINEERING, SEE SUL-0159 FOR VECP DESIGN. AS-BUILT DRAWINGS FOR CONTAINMENT PROVIDED BY RLH ARE INCLUDED AS AN APPENDIX TO THIS SET OF AS-BUILT RECORD DRAWINGS.

REV.	DATE	DESCRIPTION	BY
A	10-25-19	AS-BUILT MARKUPS	LHN

SEWERAGE AND WATER BOARD OF NEW ORLEANS

CONTRACT N□. 1369

HMGP EMERGENCY FUEL STORAGE RETROFIT POWER PLANT
MAIN WATER PURIFICATION PLANT POWER COMPLEX

FUEL STORAGE TANK AREA-TK-001
POST TENSION PLAN

THIS DOCUMENT ORIGINALLY ISSUED AND SEALED BY IVAN MANDICH, LICENCE N□ 15570 ON 2-6-15. THIS DOCUMENT SHOULD NOT BE CONSIDERED A CERTIFIED DOCUMENT.

Trigon
Quality ▲ Commitment ▲ Client Service

TRIGON ASSOCIATES, LLC
1515 POYDRAS STREET
SUITE 2200
NEW ORLEANS, LA 70112
TEL: 504-585-5767

trig□nass□□iat□s.□□m

DR:	K MCALLISTER
CK:	I MANDICH
AP:	I MANDICH
LAST EDIT:	
SCALE:	AS NOTED
DATE:	JANUARY 28, 2015

GENERAL SUPERINTENDENT

DWG. N□. 12098-W8

TRIGON DWG. NO. SB-05

SET NO:

SHEET NO: 22 OF 72

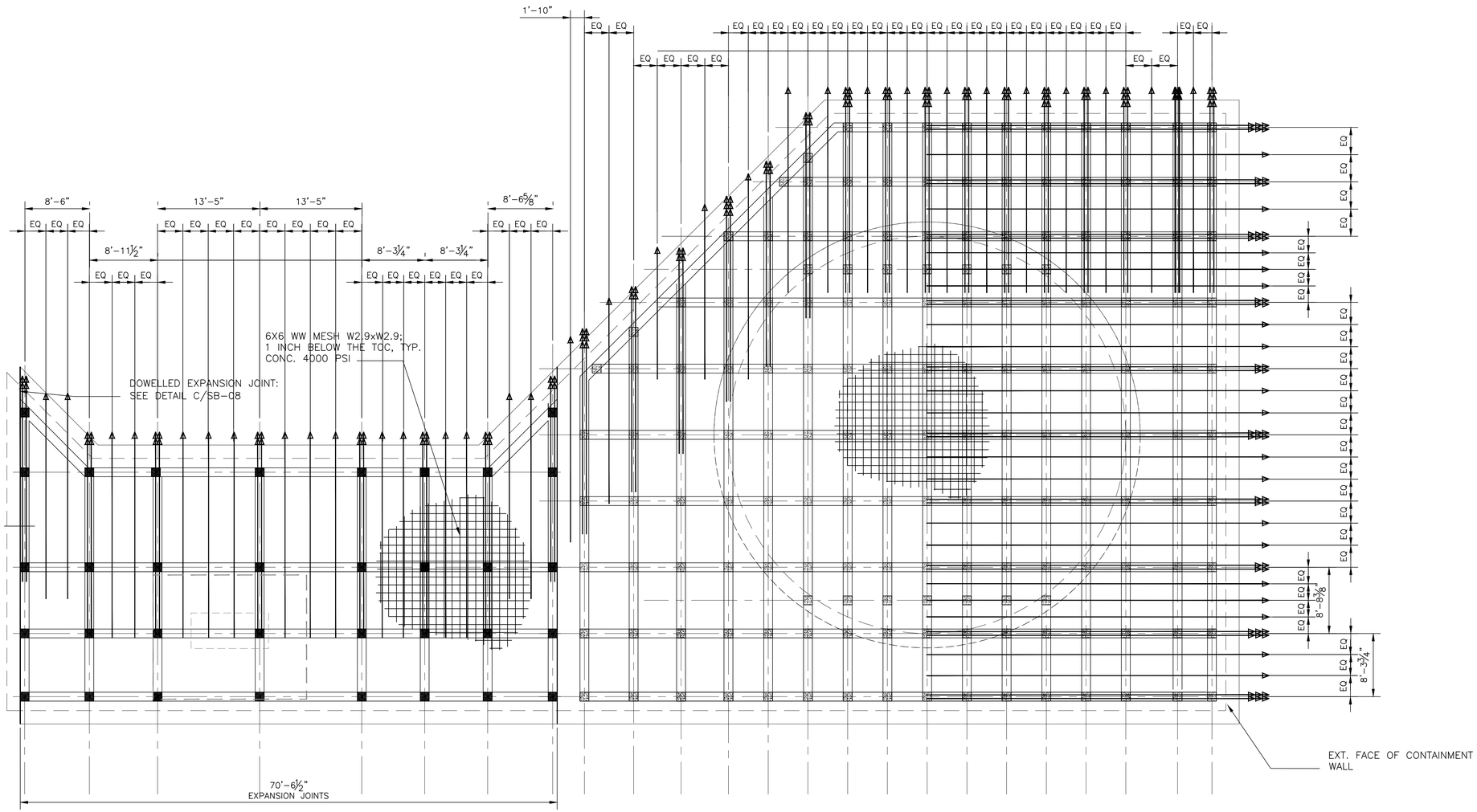

ENLARGED PLAN- POST TENSION

SCALE:1/8"□1'-0"

PLANT NORTH

TRUE NORTH

NOTES:

1. SEE SPECIFICATION 03 38 16 POST TENSIONED CONCRETE FOR POST TENSION SLAB
2. CONTRACTOR TO USE CONTINUOUS CABLES, PREPARED FOR THE ENTIRE LENGTH, AND TENSIONED BOTH DIRECTIONS.
3. CONTRACTOR TO USE ANCHORING FROM FACE TO FACE ON THE CONTINUOUS CABLES.
4. MESH 6X6 W2.9xW2.9 WILL BE INSTALLED 1 INCH BELLOW THE TOP OF THE FINISHED SLAB IN THE ENTIRE SLAB AREA.
5. NOTES ON ELONGATION:
   CONTRACTOR WILL INFORM THE ENGINEER OF THE TENSIONING FORCES USED IN OBTAINING THE GIVEN ELONGATION. IF FOUND THAT THE ELONGATION FALLS SHORTER THAN THE PULLING FORCES AS PER CALIBRATED GAUGES, CONTRACTOR WILL PROCEED TO OBTAIN THOSE FORCES. CONTRACTOR TO ACHIEVE THE SPECIFIED ELONGATION. CHECK THE PHYSICAL PROPERTIES OF THE CABLES USED TO MATCH THE MODULUS AND ELONGATION GIVEN.
6. ELONGATION CALCULATIONS SAMPLE:

   PT CONTRACTOR MUST CALCULATE THE ELONGATION AS FOLLOWS:
   LENGTH OF THE CABLE IN FEET TIMES 9.37% AND TENSIONED TO SPECIFICATIONS AND TO THE ALIGNMENT AS SHOWN SEE TYP SECTIONS.

REV.	DATE	DESCRIPTION	BY
A	10–25–19	AS–BUILT MARKUPS	LHN

THIS SHEET WAS REPLACED ENTIRELY WITH THE VECP DESIGNED BY CARUBBA ENGINEERING, SEE SUL–0159 FOR VECP DESIGN. AS–BUILT DRAWINGS FOR CONTAINMENT PROVIDED BY RLH ARE INCLUDED AS AN APPENDIX TO THIS SET OF AS–BUILT RECORD DRAWINGS.

THIS DOCUMENT ORIGINALLY ISSUED AND SEALED BY IVAN MANDICH, LICENCE N□ 15570 ON 2-6-15. THIS DOCUMENT SHOULD NOT BE CONSIDERED A CERTIFIED DOCUMENT.

Trigon
Quality ▲ Commitment ▲ Client Service

TRIGON DWG. NO. SB-06

TRIGON ASSOCIATES, LLC
1515 POYDRAS STREET
SUITE 2200
NEW ORLEANS, LA 70112
TEL: 504-585-5767

trig□nass□□iat□s,□□m

SEWERAGE AND WATER BOARD OF NEW ORLEANS

CONTRACT N□. 1369

HMGP EMERGENCY FUEL STORAGE
RETROFIT POWER PLANT
MAIN WATER PURIFICATION PLANT POWER COMPLEX

FUEL STORAGE TANK AREA (TK-002) POST TENSION PLAN

DR:	K MCALLISTER
CK:	I MANDICH
AP:	I MANDICH
LAST EDIT:	
SCALE:	AS NOTED
DATE:	JANUARY 28, 2015

GENERAL SUPERINTENDENT

DWG. N□. 12098-W8

SET NO: SHEET NO: 23 OF 72

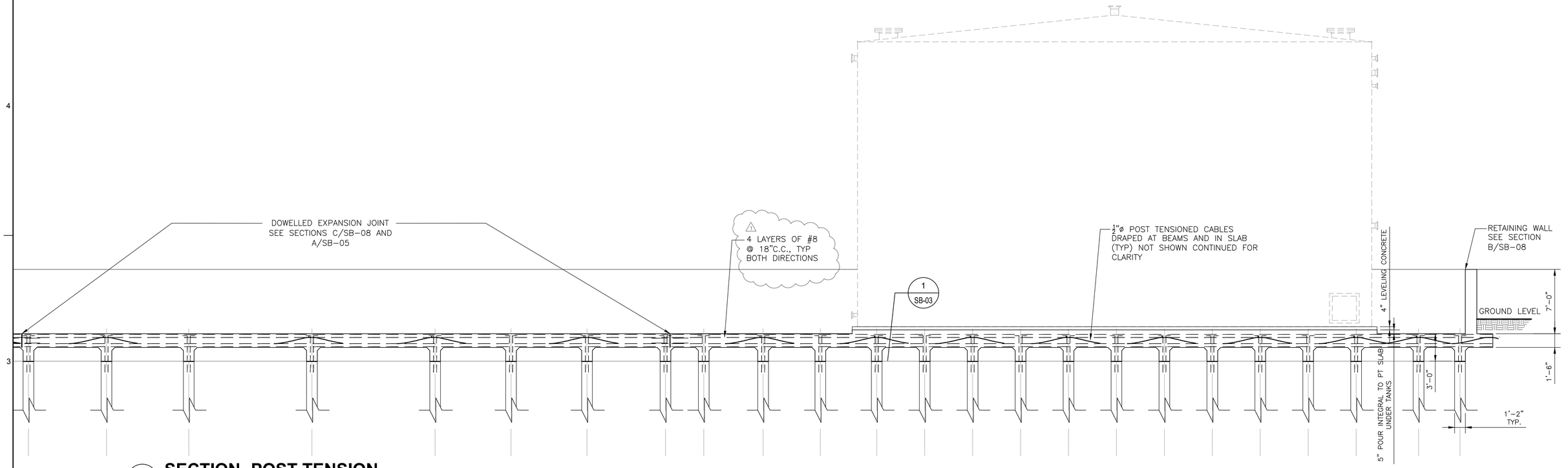

A SB-02 **SECTION- POST TENSION**

SCALE:3/16"=1'-0"

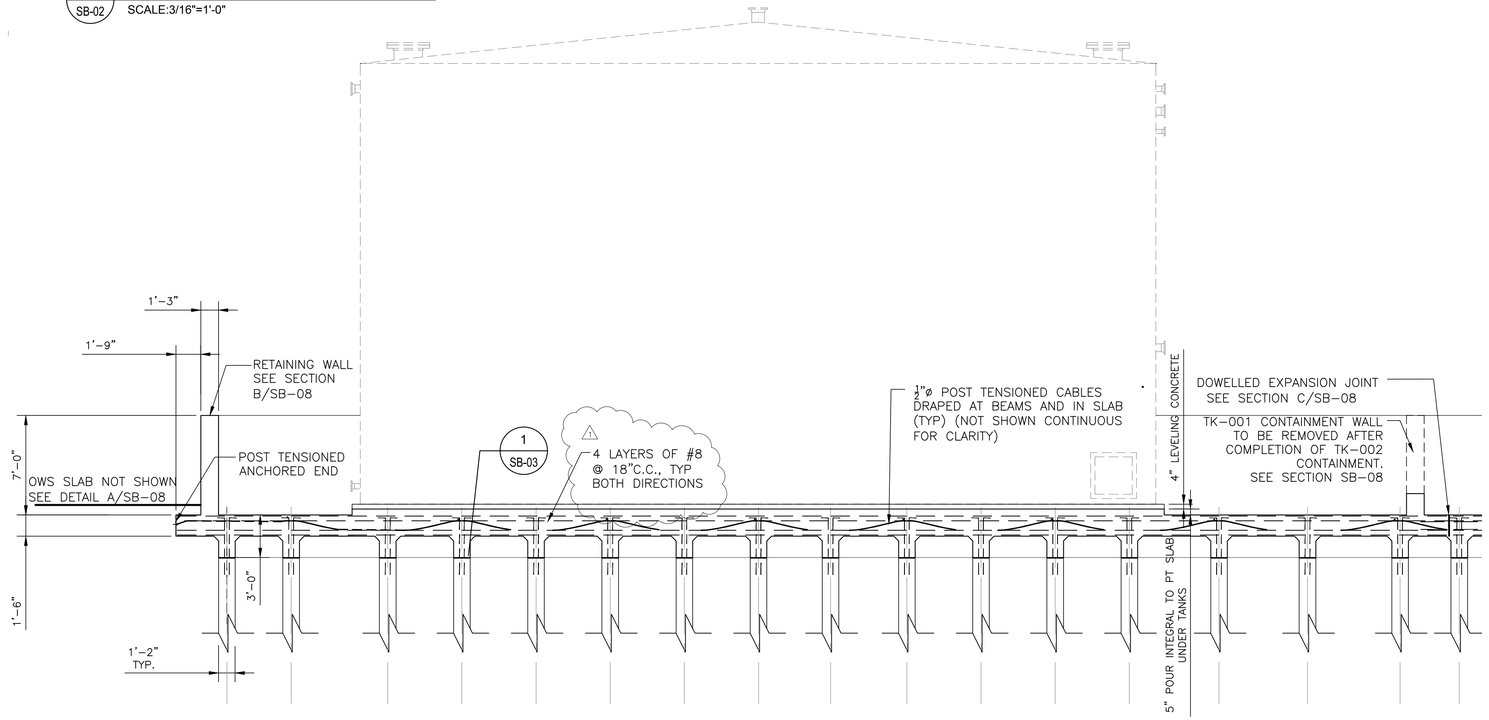

B SB-02 **SECTION- POST TENSION**

SCALE:3/16"=1'-0"

A CONCRETE CONTAINMENT DESIGN REPLACED WITH VECP DESIGNED BY CARRUBA ENGINEERING, SEE SUL-0159 FOR VECP DESIGN. AS-BUILT DRAWINGS FOR CONTAINMENT PROVIDED BY RLH ARE INCLUDED AS AN APPENDIX TO THIS SET OF AS-BUILT DRAWINGS.

THIS DOCUMENT ORIGINALLY ISSUED AND SEALED BY IVAN MANDICH, LICENCE No. 15570 ON 2-6-15. THIS DOCUMENT SHOULD NOT BE CONSIDERED A CERTIFIED DOCUMENT.

Trigon
Quality ▲ Commitment ▲ Client Service

TRIGON DWG. NO. SB-07

TRIGON ASSOCIATES, LLC
1515 POYDRAS STREET
SUITE 2200
NEW ORLEANS, LA 70112
TEL: 504-585-5767

trigonassociates.com

REV.	DATE	DESCRIPTION	BY
A	10-25-19	AS-BUILT MARKUPS	LHN
1	3-27-15	REVISED REBAR CALL-OUT (ADD.4)	ICM

SEWERAGE AND WATER BOARD OF NEW ORLEANS

CONTRACT No. 1369

HMGP EMERGENCY FUEL STORAGE
RETROFIT POWER PLANT
MAIN WATER PURIFICATION PLANT POWER COMPLEX

FUEL STORAGE TANK AREA SECTIONS

DR:	K MCALLISTER
CK:	I MANDICH
AP:	I MANDICH
LAST EDIT:	
SCALE:	AS NOTED
DATE:	JANUARY 28, 2015

GENERAL SUPERINTENDENT

DWG. No. 12098-W8

SET NO: SHEET NO: 24 OF 72

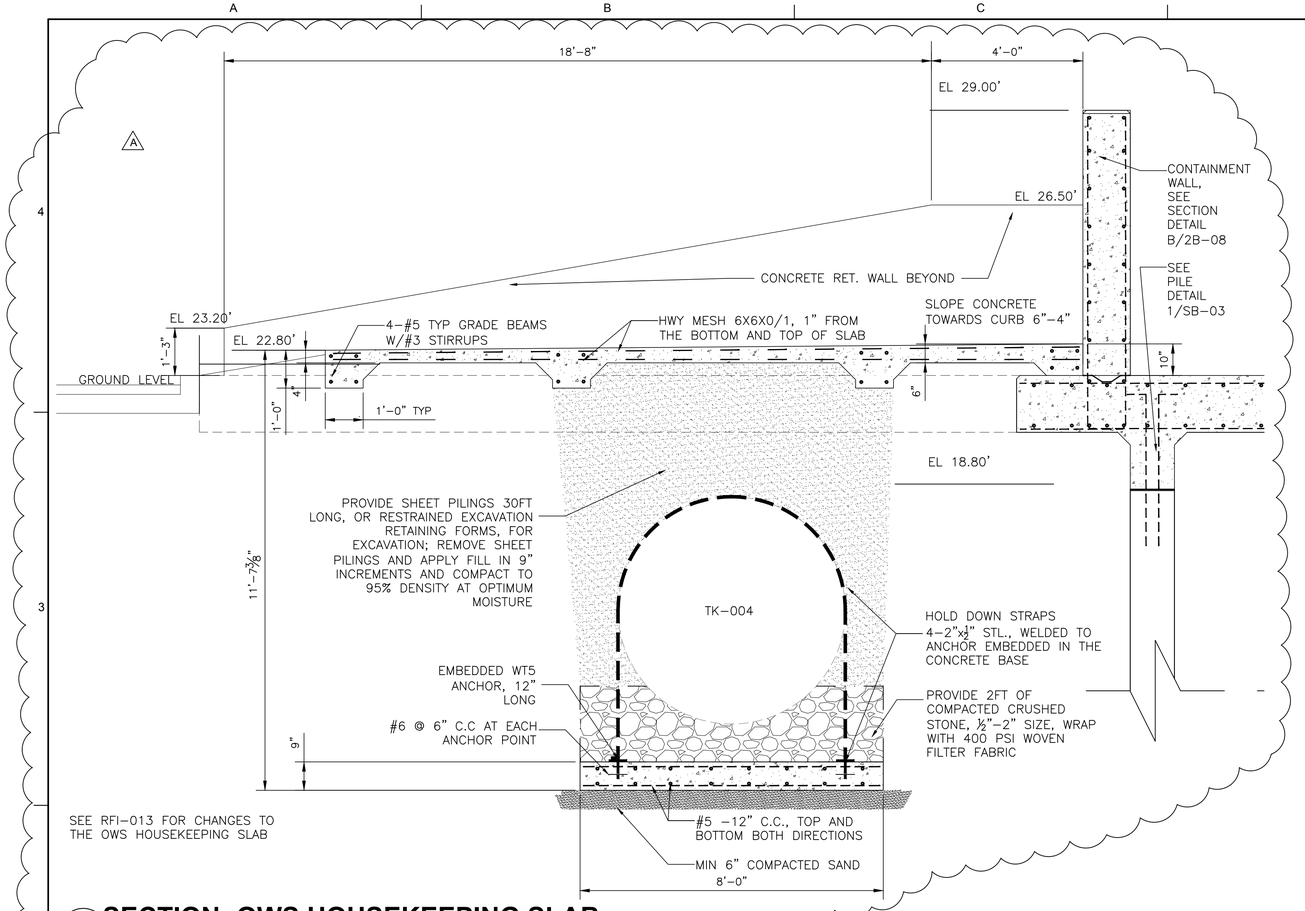

A SB-02 SECTION- OWS HOUSEKEEPING SLAB

SCALE:1/2"=1'-0"

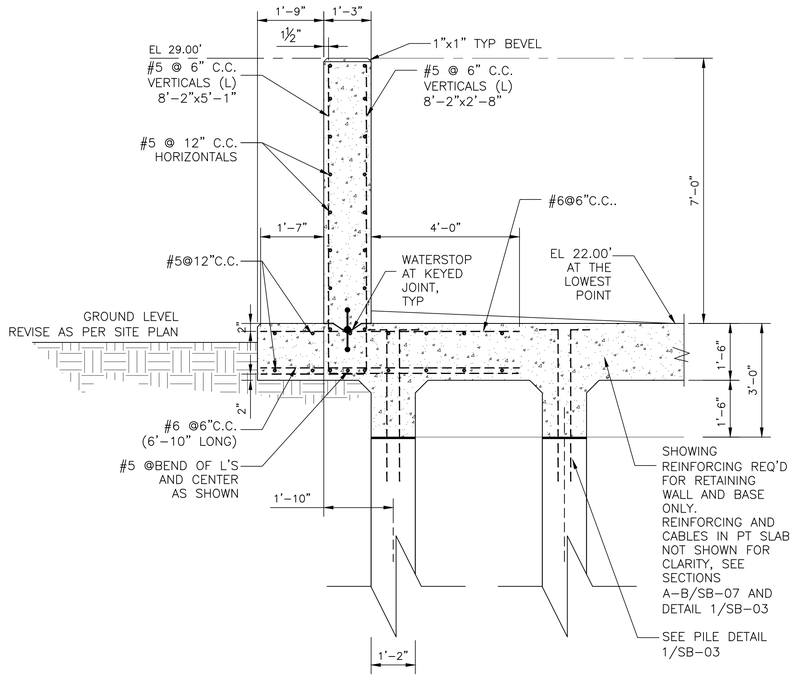

B SB-02 SECTION- RETAINING WALL TYP

SCALE: 1/2"=1'-0"

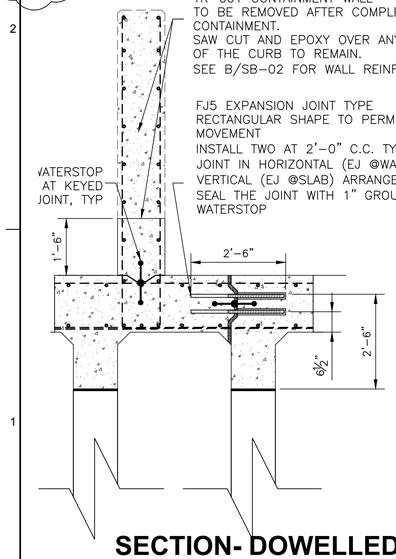

C SB-02 SECTION- DOWELLED EXPANSION JOINT

SCALE: 1/2"=1'-0"

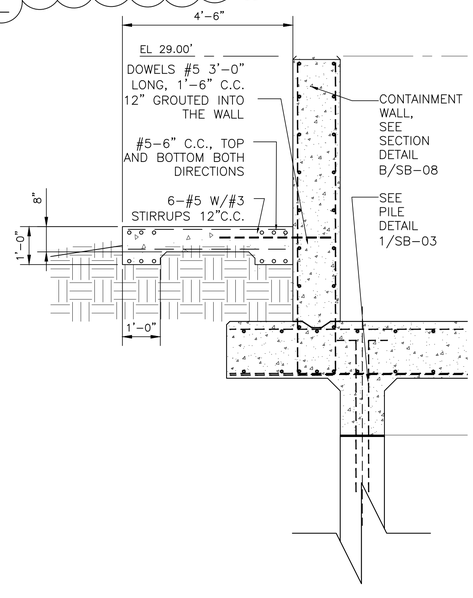

D SB-09 SECTION- STAIR SLAB

SCALE: 1/2"=1'-0"

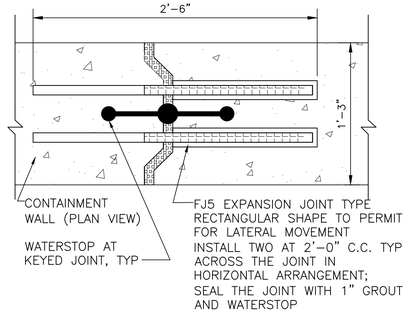

1 SB-02 DETAIL- WALL EXPANSION JOINT

SCALE: 1 1/2"=1'-0"

NOTES:

1. SIZE OF OWS IS APPROXIMATE. SLAB UNDER EQUIPMENT SHALL ACCOMMODATE MANUFACTURER SIZING, RECOMMENDATIONS, AND PENETRATIONS THROUGH THE SLAB. CONTRACTOR TO VERIFY INSTALLATION MEANS AND METHODS W/TANK MANUFACTURER.

REV.	DATE	DESCRIPTION	BY
A	10-25-19	AS-BUILT MARKUPS	LHN

SEWERAGE AND WATER BOARD OF NEW ORLEANS

CONTRACT No. 1369

HMGP EMERGENCY FUEL STORAGE RETROFIT POWER PLANT
MAIN WATER PURIFICATION PLANT POWER COMPLEX

FUEL STORAGE TANK AREA SECTION DETAILS

A ALL WORK ASSOCIATED WITH CONTAINMENT SLAB AND WALLS REPLACED WITH VECP DESIGNED BY CARUBBA ENGINEERING, SEE SUL-0159 FOR VECP DESIGN. AS-BUILT DRAWINGS FOR CONTAINMENT PROVIDED BY RLH ARE INCLUDED AS AN APPENDIX TO THIS SET OF AS-BUILT DRAWINGS.

THIS DOCUMENT ORIGINALLY ISSUED AND SEALED BY IVAN MANDICH, LICENCE No. 15570 ON 2-6-15. THIS DOCUMENT SHOULD NOT BE CONSIDERED A CERTIFIED DOCUMENT.

Trigon
Quality ▲ Commitment ▲ Client Service

TRIGON DWG. NO. SB-08

TRIGON ASSOCIATES, LLC
1515 POYDRAS STREET
SUITE 2200
NEW ORLEANS, LA 70112
TEL: 504-585-5767
trigonassociates.com

DR.	K MCALLISTER
CK:	I MANDICH
AP:	I MANDICH
LAST EDIT:	
SCALE:	AS NOTED
DATE:	JANUARY 28, 2015

GENERAL SUPERINTENDENT

DWG. No. 12098-W8

SET NO: SHEET NO: 25 OF 72

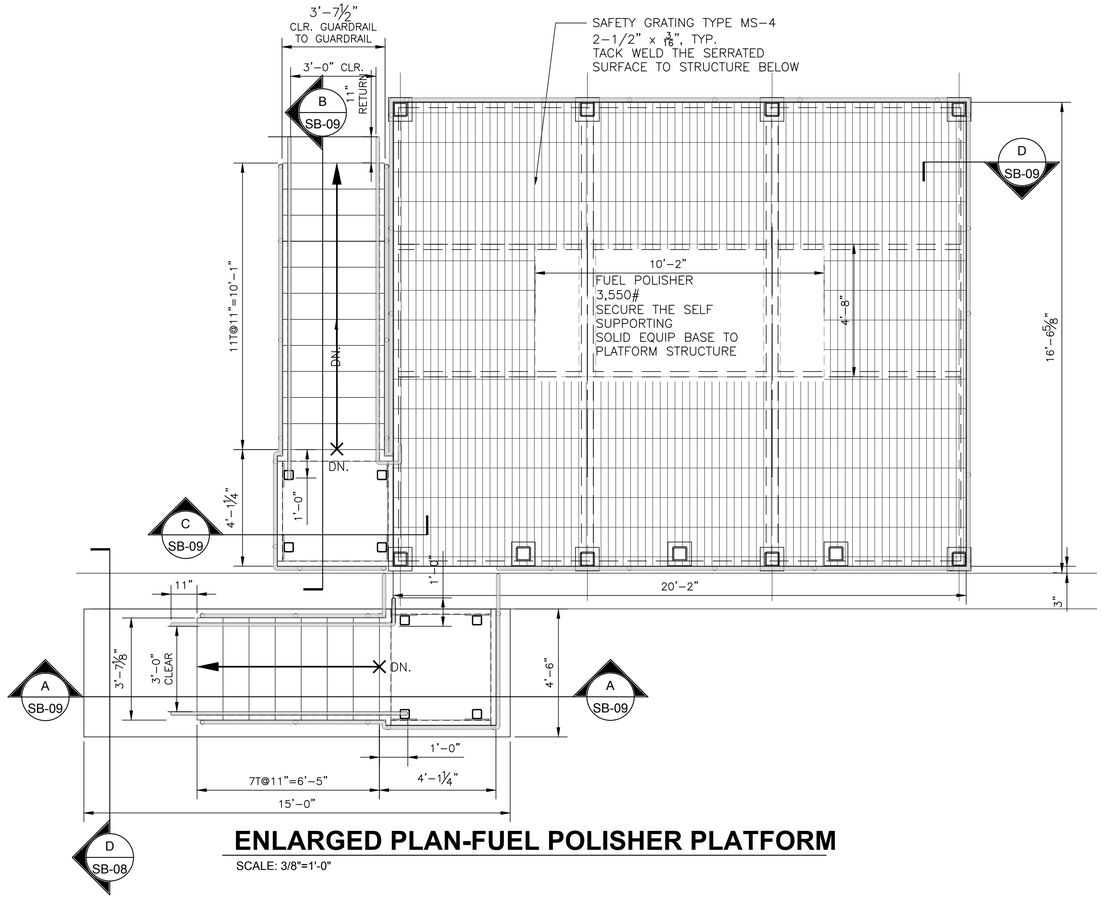

ENLARGED PLAN-FUEL POLISHER PLATFORM

SCALE: 3/8"=1'-0"

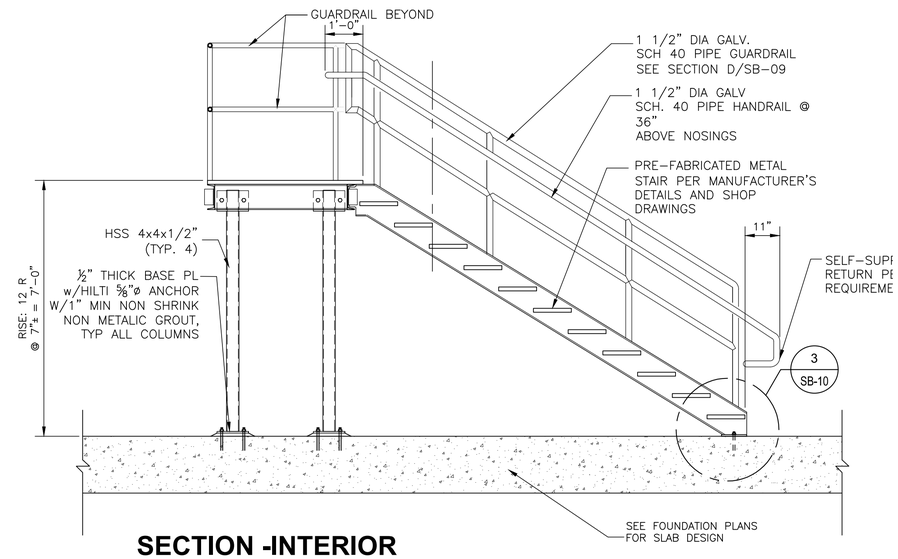

SECTION -INTERIOR CONTAINMENT STAIRS

B SB-09 SCALE: 1/2"=1'-0"

6X6 WW MESH W2.9xW2.9; 1 INCH BELOW THE TOC, TYP. CONC. 4000 PSI

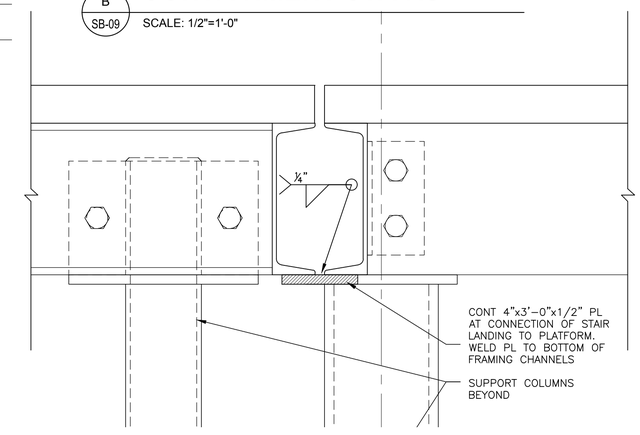

SECTION-STAIR LANDING TO PLATFORM

C SB-09 SCALE: 3"=1'-0"

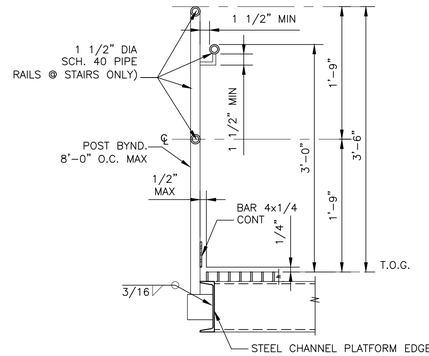

TYP GUARDRAIL / HANDRAIL SECTION

D SB-09 SCALE: 1"=1'-0"

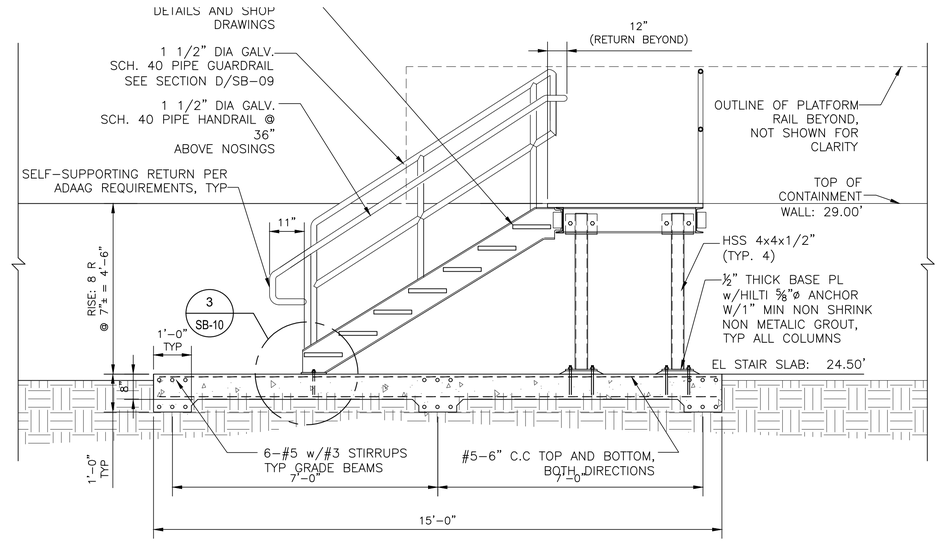

SECTION THROUGH STAIR

A SB-09 SCALE: 1/2"=1'-0"

NOTES:

1. SEE SPECIFICATION 05 51 16 INDUSTRIAL METAL STAIRS FOR STAIRS AND HANDRAILS

A SEE SUL-0241 FOR BASELINE AS-BUILTS

THIS DOCUMENT ORIGINALLY ISSUED AND SEALED BY IVAN MANDICH, LICENCE No. 15570 ON 2-6-15. THIS DOCUMENT SHOULD NOT BE CONSIDERED A CERTIFIED DOCUMENT.

Trigon
Quality ▲ Commitment ▲ Client Service

TRIGON ASSOCIATES, LLC
1515 POYDRAS STREET
SUITE 2200
NEW ORLEANS, LA 70112
TEL: 504-585-5767

trigonassociates.com

TRIGON DWG. NO. SB-09

REV.	DATE	DESCRIPTION	BY
A	10-25-19	AS-BUILT MARKUPS	LHN

SEWERAGE AND WATER BOARD OF NEW ORLEANS

CONTRACT No. 1369

HMGP EMERGENCY FUEL STORAGE
RETROFIT POWER PLANT
MAIN WATER PURIFICATION PLANT POWER COMPLEX

FUEL STORAGE TANK AREA STAIR DETAILS

DR:	K MCALLISTER
CK:	I MANDICH
AP:	I MANDICH
LAST EDIT:	
SCALE:	AS NOTED
DATE:	JANUARY 28, 2015

GENERAL SUPERINTENDENT

DWG. No. 12098-W8

SET NO: SHEET NO: 26 OF 72

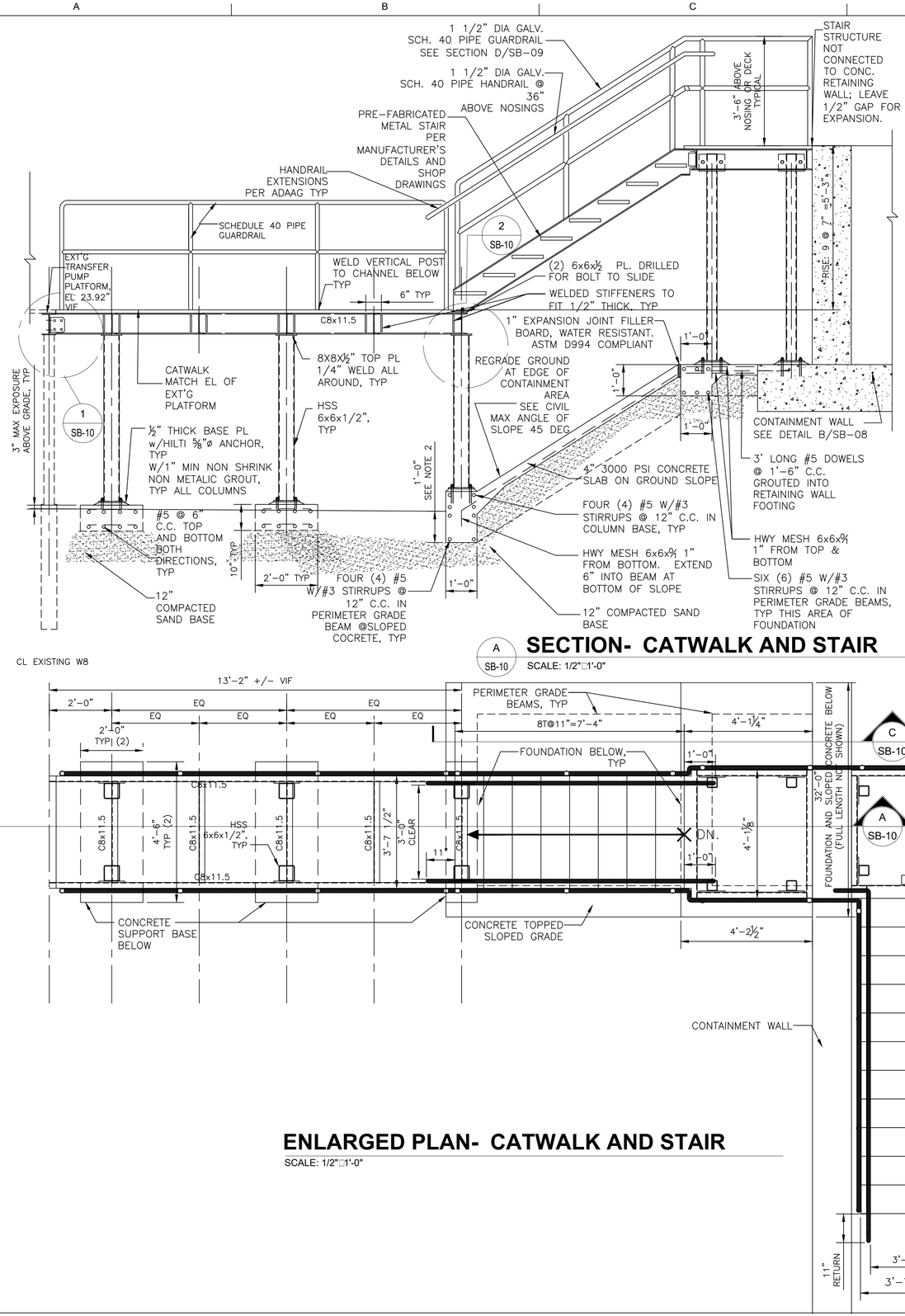

SECTION- CATWALK AND STAIR

A SB-10 SCALE: 1/2"□1'-0"

ENLARGED PLAN- CATWALK AND STAIR

SCALE: 1/2"□1'-0"

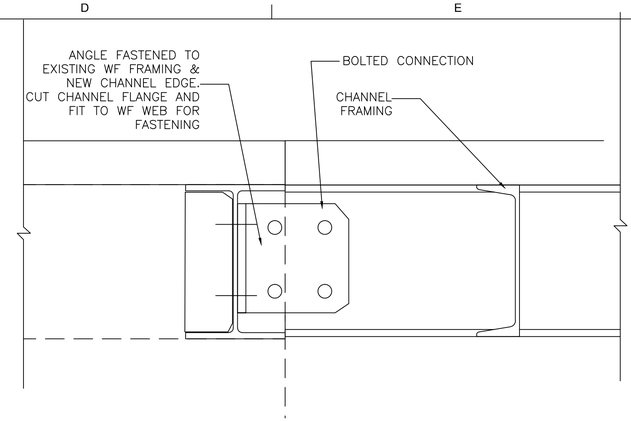

DETAIL- CATWALK TO EXT'G. CATWALK

1 SB-10 SCALE: 3"□1'-0"

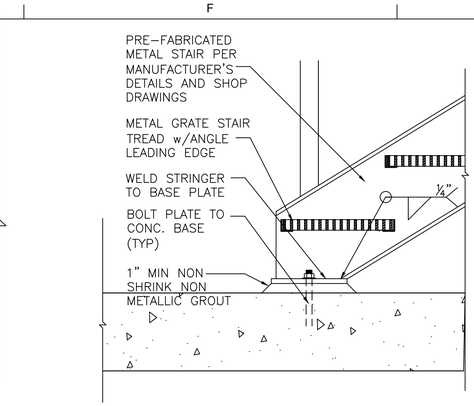

DETAIL-TYPICAL STAIR BASE PLATE

3 SB-09 SCALE: 1 1/2"□1'-0"

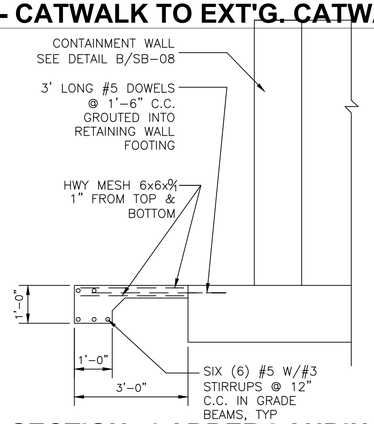

SECTION- LADDER LANDING

B SB-02 SCALE: 1/2"□1'-0"

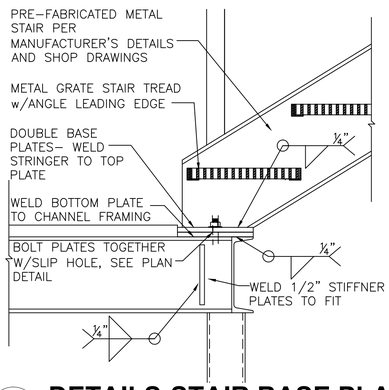

DETAILS-STAIR BASE PLATE

2 SB-10 SCALE: 1 1/2"□1'-0"

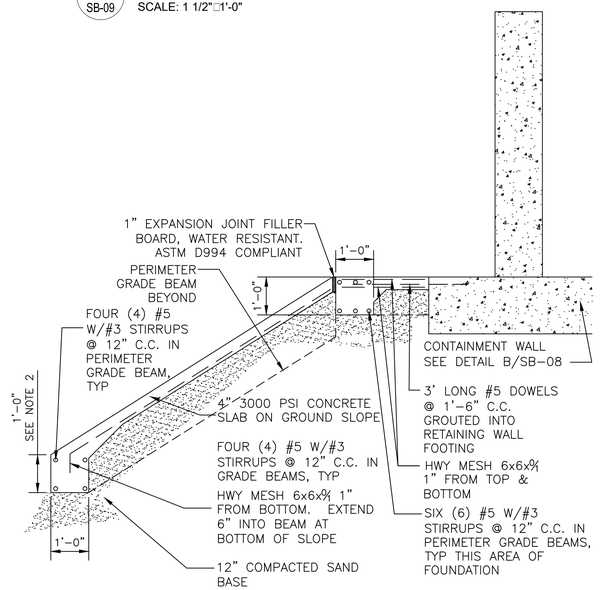

SECTION- SLOPED CONCRETE

C SB-10 SCALE: 1/2"□1'-0"

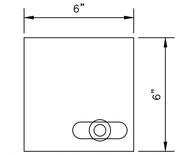

PLAN OF PLATE DRILLED FOR BOLTS TO SLIDE (NOT TO SCALE)

NOTES:

1. SEE SPECIFICATION 05 51 16 INDUSTRIAL METAL STAIRS FOR STAIRS AND HANDRAILS
2. EL 17.31' TOP OF GRADE BEAM, VERIFY IN FIELD TO ENSURE MIN 6" BELOW TOS OF TANK SLAB

REV.	DATE	DESCRIPTION	BY
A	10-25-19	AS-BUILT MARKUPS	LHN

SEWERAGE AND WATER BOARD OF NEW ORLEANS

CONTRACT N□. 1369

HMGP EMERGENCY FUEL STORAGE RETROFIT POWER PLANT
MAIN WATER PURIFICATION PLANT POWER COMPLEX

FUEL STORAGE TANK AREA CATWALK / STAIR/ DETAILS

A SEE SUL-0241 FOR BASELINE AS-BUILTS

THIS DOCUMENT ORIGINALLY ISSUED AND SEALED BY IVAN MANDICH, LICENCE N□ 15570 ON 2-6-15. THIS DOCUMENT SHOULD NOT BE CONSIDERED A CERTIFIED DOCUMENT.

Trigon
Quality ▲ Commitment ▲ Client Service

TRIGON DWG. NO. SB-10

TRIGON ASSOCIATES, LLC
1515 POYDRAS STREET
SUITE 2200
NEW ORLEANS, LA 70112
TEL: 504-585-5767
trig□nass□□iat□s.□□m

DR:	K MCALLISTER
CK:	I MANDICH
AP:	I MANDICH
LAST EDIT:	
SCALE:	AS NOTED
DATE:	JANUARY 28, 2015

GENERAL SUPERINTENDENT

DWG. N□. 12098-W8

SET NO: SHEET NO: 27 OF 72

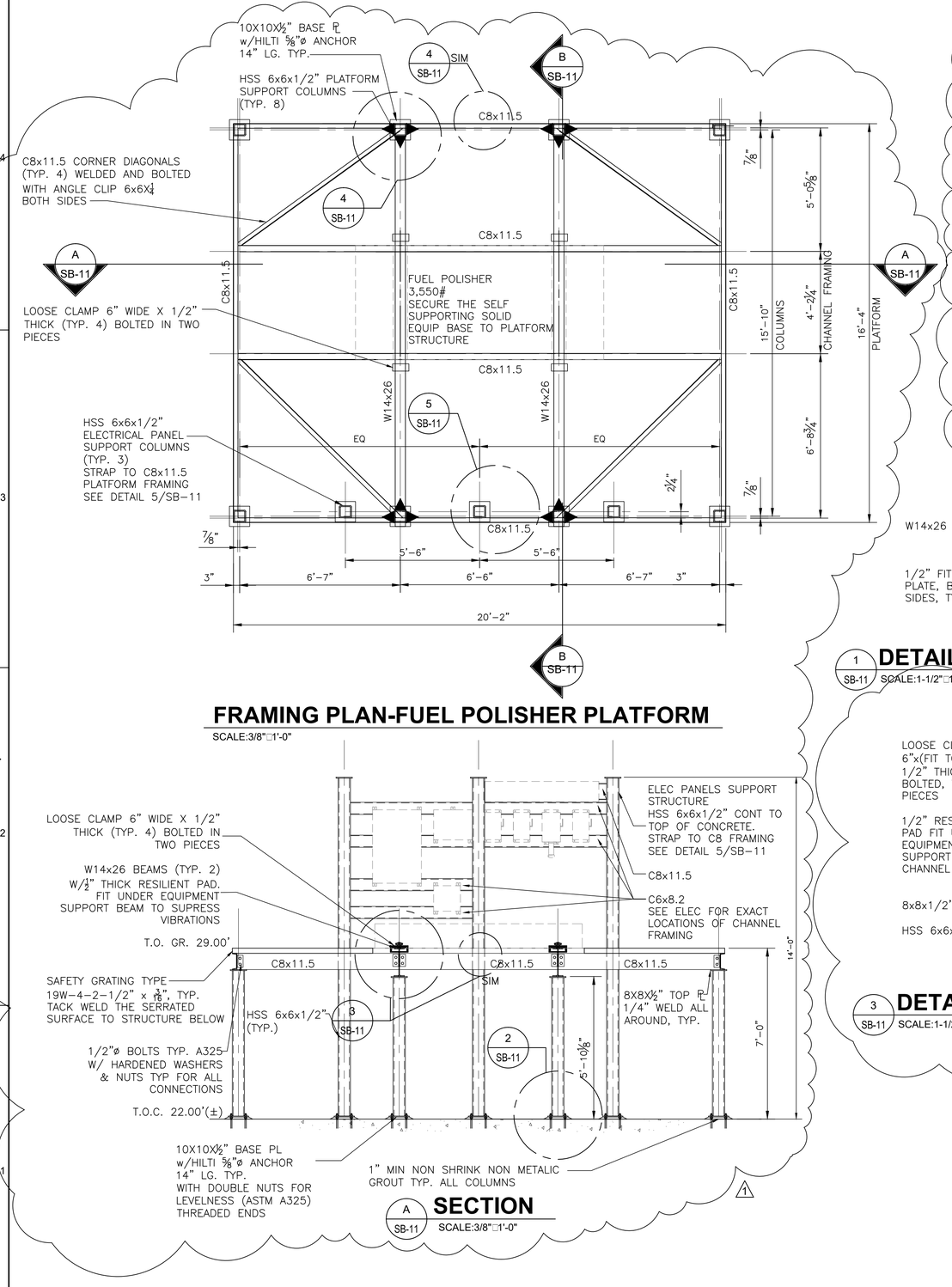

FRAMING PLAN-FUEL POLISHER PLATFORM

SCALE:3/8"□1'-0"

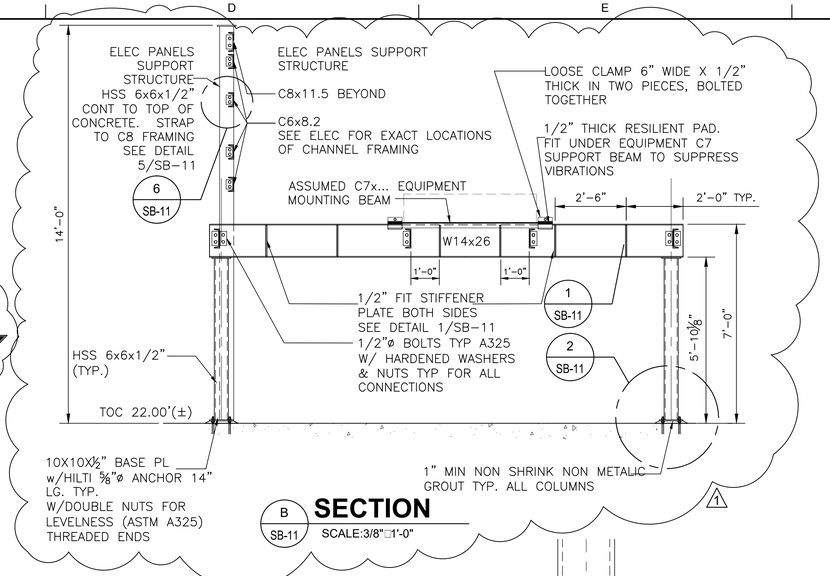

B SB-11 SECTION

SCALE:3/8"□1'-0"

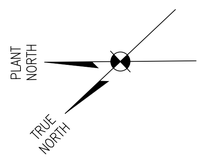

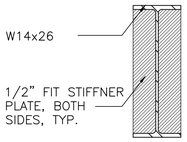

1 SB-11 DETAIL- STIFFNER PLATE

SCALE:1-1/2"□1'-0"

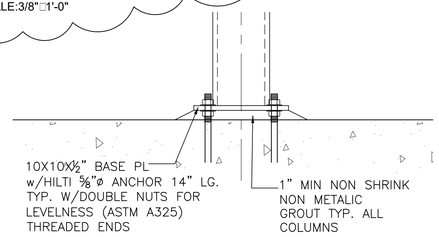

2 SB-11 DETAIL- TYP COLUMN CONNECTION

SCALE:1-1/2"□1'-0"

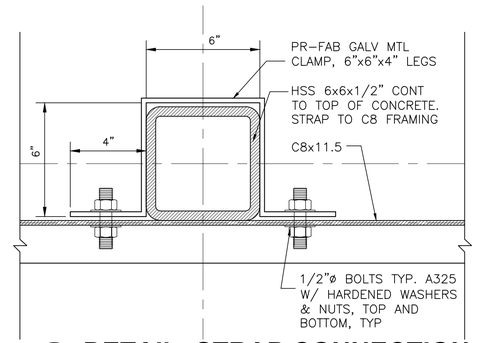

5 SB-11 DETAIL- STRAP CONNECTION

SCALE:3"□1'-0"

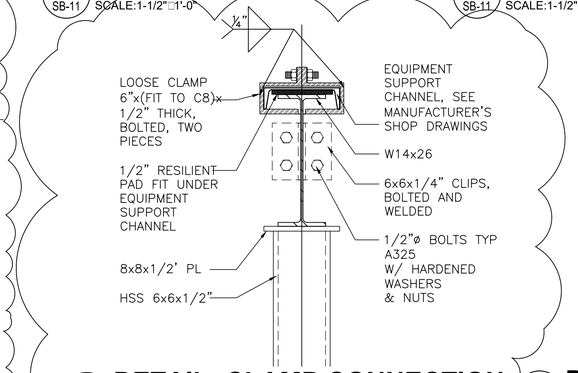

3 SB-11 DETAIL- CLAMP CONNECTION

SCALE:1-1/2"□1'-0"

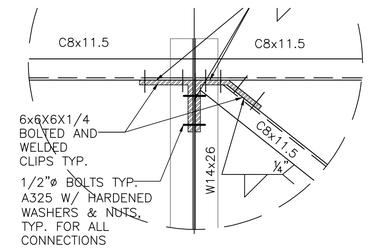

4 SB-11 DETAIL- FRAMING CONNECTIONS

SCALE:1-1/2"□1'-0"

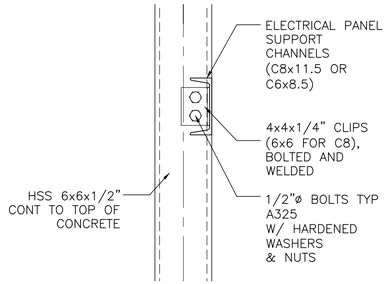

6 SB-11 DETAIL-ELEC PANEL SUPPORT

SCALE:1-1/2"□1'-0"

SEE SUL-0241 FOR BASELINE AS-BUILTS. A
SHEET REVISED PER RESPONSE TO RFI-0116.

REV.	DATE	DESCRIPTION	BY
A	10-25-19	AS-BUILT MARKUPS	LHN
1	12/14/18	RFI 116 EQUIPMENT COORDINATION	KM / IM

SEWERAGE AND WATER BOARD
OF NEW ORLEANS

CONTRACT N□ 1369

HMGP EMERGENCY FUEL STORAGE
RETROFIT POWER PLANT
MAIN WATER PURIFICATION PLANT POWER COMPLEX

FUEL STORAGE TANK AREA
FUEL POLISHER PLATFORM

THIS DOCUMENT ORIGINALLY ISSUED AND SEALED BY IVAN MANDICH, LICENCE N□ 15570 ON 2-6-15. THIS DOCUMENT SHOULD NOT BE CONSIDERED A CERTIFIED DOCUMENT.

Trigon
Quality ▲ Commitment ▲ Client Service

TRIGON DWG. NO. SB-11

TRIGON ASSOCIATES, LLC
1515 POYDRAS STREET
SUITE 2200
NEW ORLEANS, LA 70112
TEL: 504-585-5767

trig□nass□□iat□s.□□m

DR:	K MCALLISTER
CK:	I MANDICH
AP:	I MANDICH
LAST EDIT:	
SCALE:	AS NOTED
DATE:	JANUARY 28, 2015

GENERAL SUPERINTENDENT

DWG. N□. 12098-W8

SET NO: SHEET NO: 28 OF 72

TK–003
EMERGENCY FUEL DAY TANK
(15,000 GALLON CAPACITY)

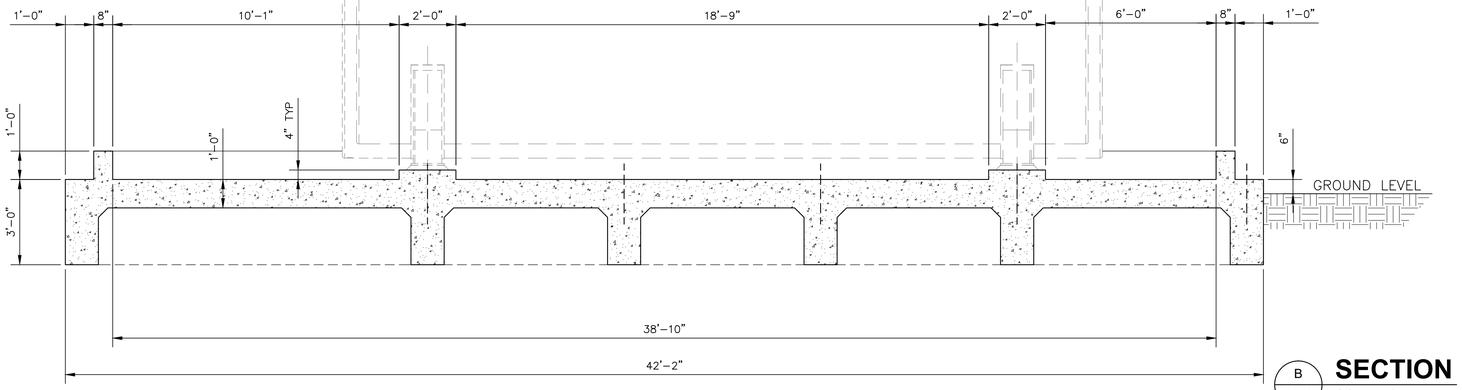

B SC-02 **SECTION**
SCALE:3/8"□1'-0"

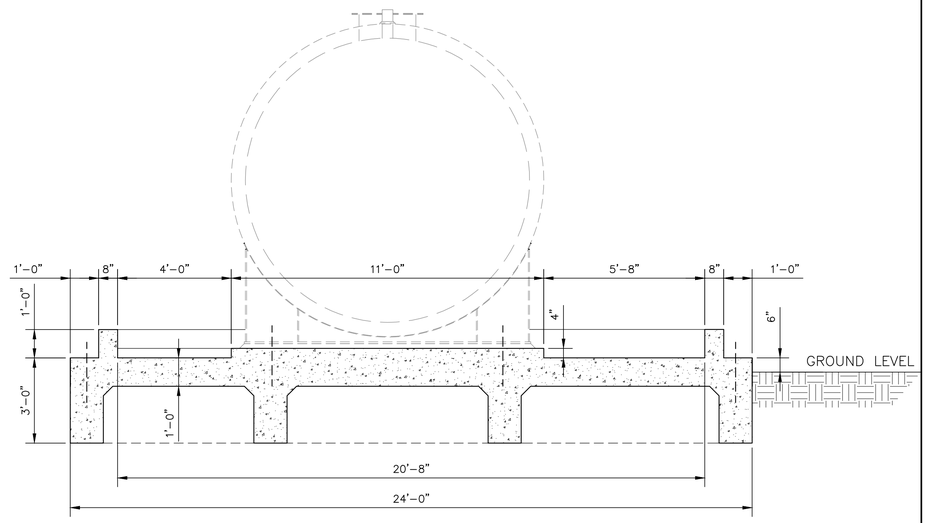

A SC-02 **SECTION**
SCALE:3/8"□1'-0"

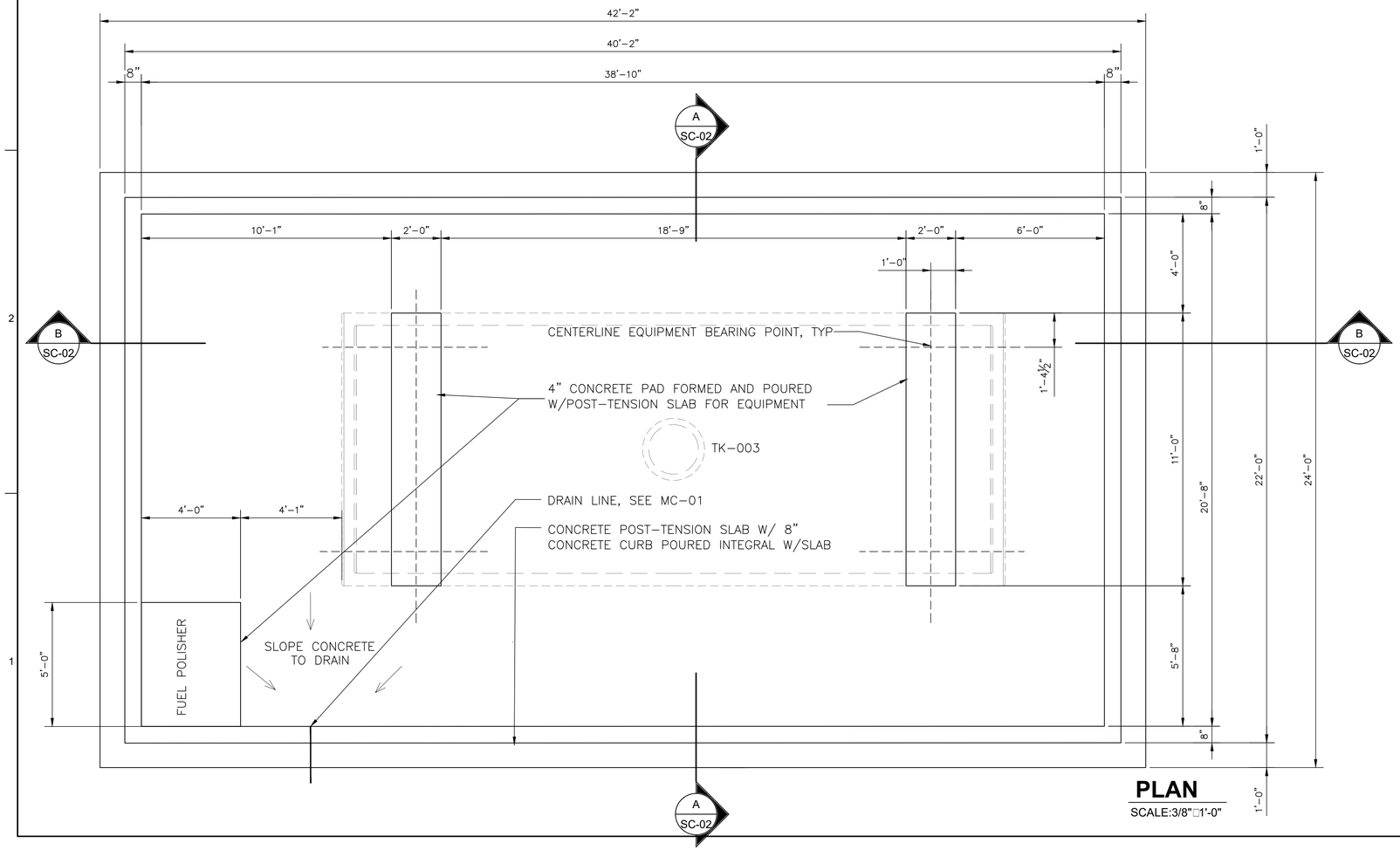

PLAN
SCALE:3/8"□1'-0"

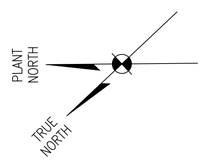

REV.	DATE	DESCRIPTION	BY
A	10–25–19	AS–BUILT MARKUPS	LHN

SEWERAGE AND WATER BOARD
OF NEW ORLEANS

CONTRACT N□. 1369

HMGP EMERGENCY FUEL STORAGE
RETROFIT POWER PLANT
MAIN WATER PURIFICATION PLANT POWER COMPLEX

DAY TANK (TK-003)
PLAN AND SECTIONS

A AS–BUILT REVISIONS NOT PROVIDED FOR THIS SHEET BY THE CONTRACTOR.

THIS DOCUMENT ORIGINALLY ISSUED AND SEALED BY IVAN MANDICH, LICENCE N□. 15570 ON 2-6-15. THIS DOCUMENT SHOULD NOT BE CONSIDERED A CERTIFIED DOCUMENT.

Trigon
Quality ▲ Commitment ▲ Client Service

TRIGON ASSOCIATES, LLC
1515 POYDRAS STREET
SUITE 2200
NEW ORLEANS, LA 70112
TEL: 504-585-5767

trig□nass□□iat□s.□□m

TRIGON DWG. NO. SC-02

DR.	K MCALLISTER
CK:	I MANDICH
AP:	I MANDICH
LAST EDIT:	
SCALE:	AS NOTED
DATE:	JANUARY 28, 2015

GENERAL SUPERINTENDENT

DWG. N□. 12098-W8

SET NO: SHEET NO: 29 OF 72

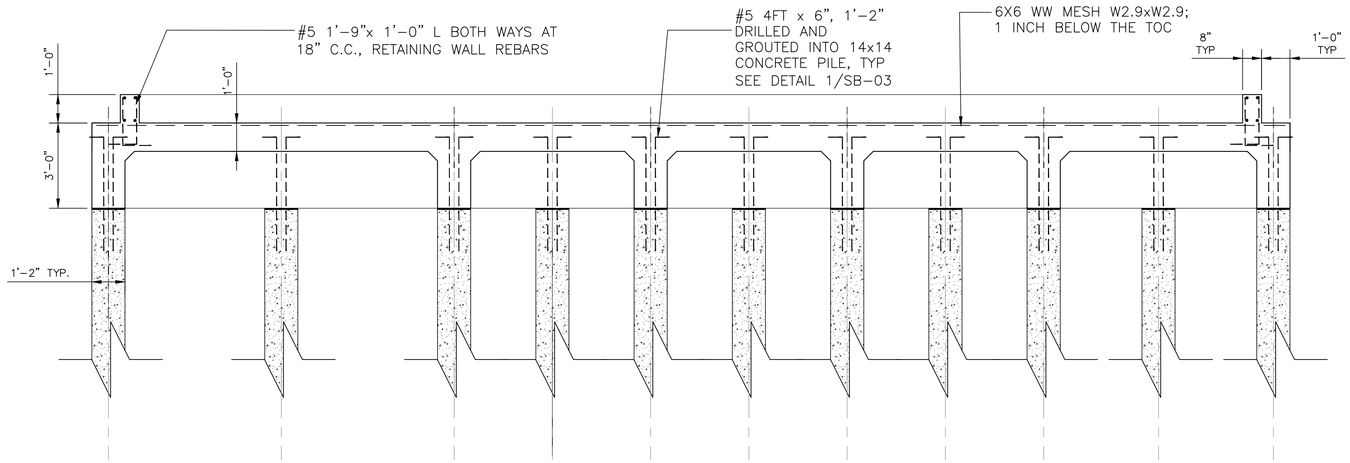

B SC-03 **SECTION**
SCALE:3/8"□1'-0"

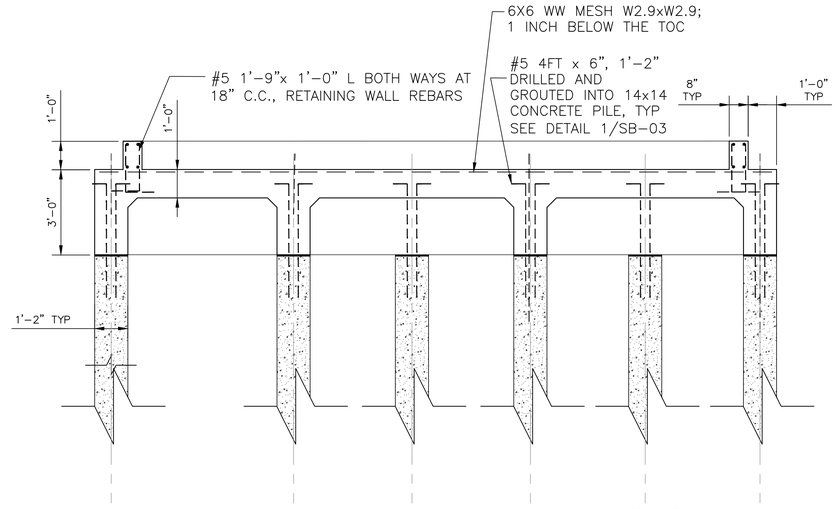

A SC-03 **SECTION**
SCALE:3/8"□1'-0"

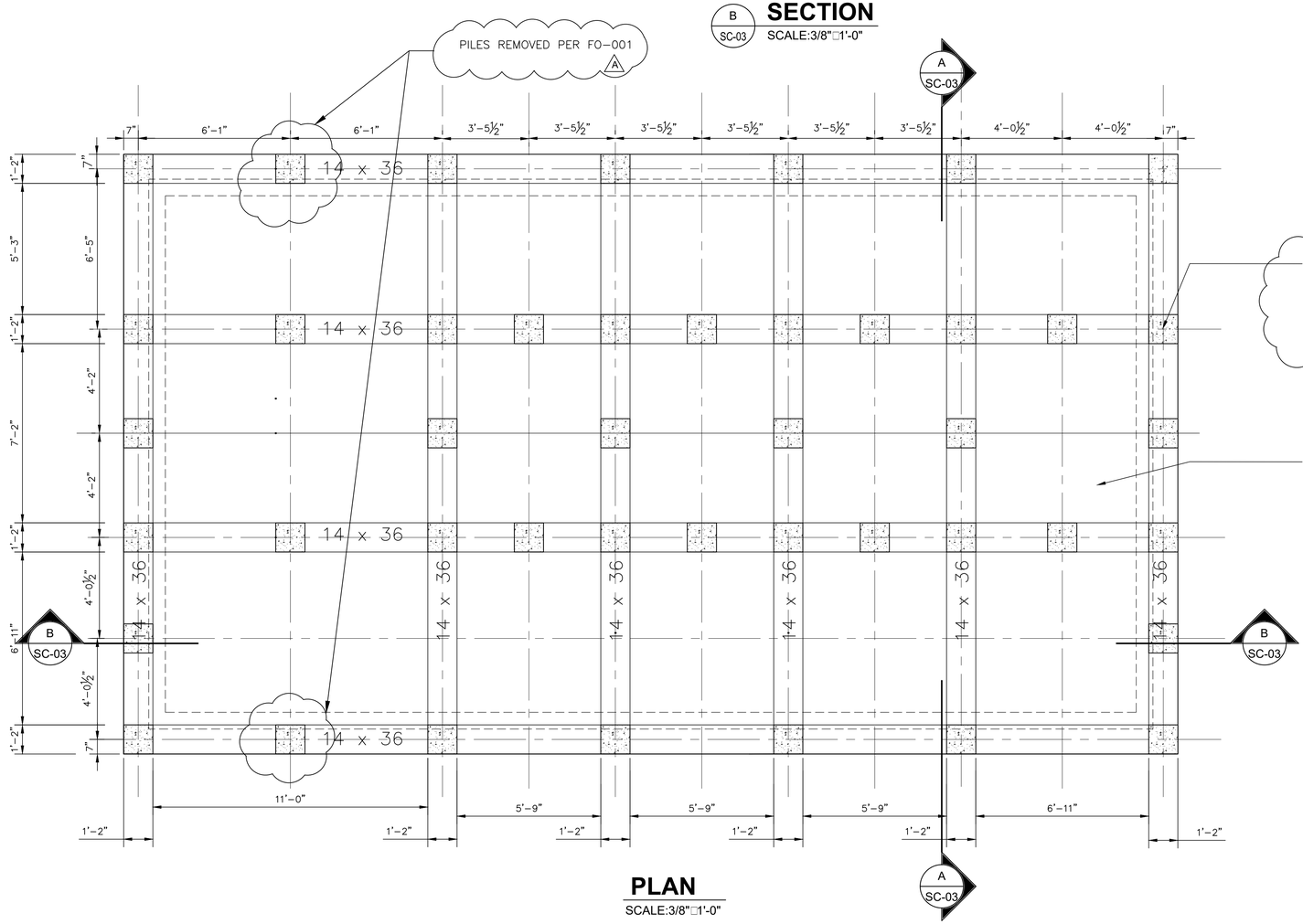

PLAN
SCALE:3/8"□1'-0"

42 EACH, 40 FT. LONG, 25 T PER PILE, SF=2;
PRESTRESSED 14" SQ. TYP. CONC. PILINGS, SEE SPECIFICATIONS FOR PILE DRIVING

A PILE QUANTITY AND LENGTH CHANGED PER FO–001

12" SLAB THICKNESS, SEE REINFORCING PLANPS

PLANT NORTH
TRUE NORTH

NOTES:

1. SEE SPECIFICATION 31 62 13.19 PRECAST CONCRETE PILES FOR PILE DRIVING.
2. (A) TYP. 14x14 PRE–STRESSED CONCRETE PILES 42 TOTAL, 40' LONG, 25T LOAD CAPACITY, ULTIMATE LOAD CAPACITY 50T/PILE, SF.=2

REV.	DATE	DESCRIPTION	BY
A	10–25–19	AS–BUILT MARKUPS	LHN

SEWERAGE AND WATER BOARD OF NEW ORLEANS

CONTRACT N□ 1369

HMGP EMERGENCY FUEL STORAGE
RETROFIT POWER PLANT
MAIN WATER PURIFICATION PLANT POWER COMPLEX

DAY TANK (TK-003) FOUNDATION/ PILE PLAN AND SECTIONS

THIS DOCUMENT ORIGINALLY ISSUED AND SEALED BY IVAN MANDICH, LICENCE N□ 15570 ON 2-6-15. THIS DOCUMENT SHOULD NOT BE CONSIDERED A CERTIFIED DOCUMENT.

Trigon
Quality ▲ Commitment ▲ Client Service

TRIGON DWG. NO. SC-03

TRIGON ASSOCIATES, LLC
1515 POYDRAS STREET
SUITE 2200
NEW ORLEANS, LA 70112
TEL: 504-585-5767
trig□nass□□lat□s.□□m

DR:	K MCALLISTER
CK:	I MANDICH
AP:	I MANDICH
LAST EDIT:	
SCALE:	AS NOTED
DATE:	JANUARY 28, 2015

GENERAL SUPERINTENDENT

DWG. N□. 12098-W8

SET NO: SHEET NO: 30 OF 72

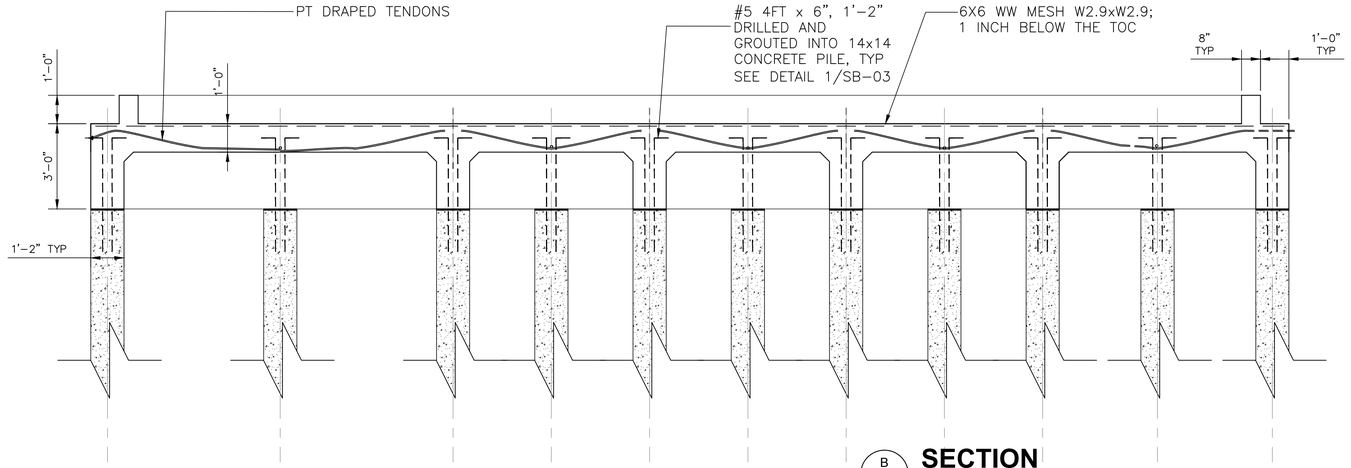

B / SC-04 **SECTION**
SCALE:3/8"=1'-0"

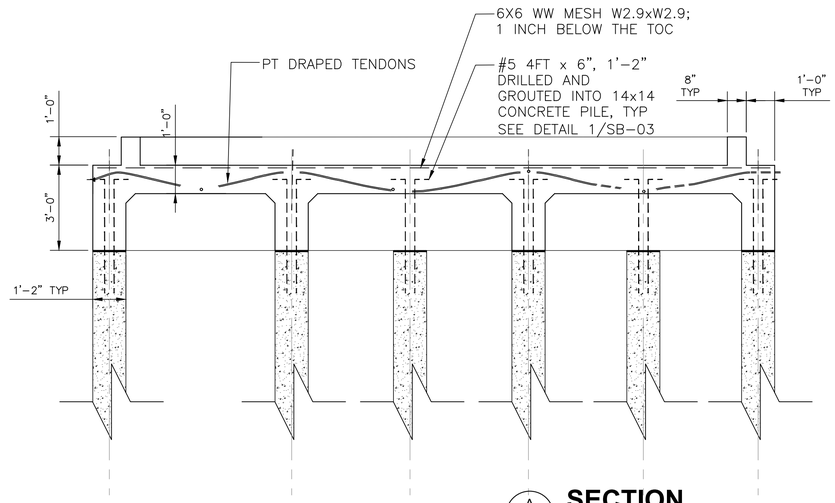

A / SC-04 **SECTION**
SCALE:3/8"=1'-0"

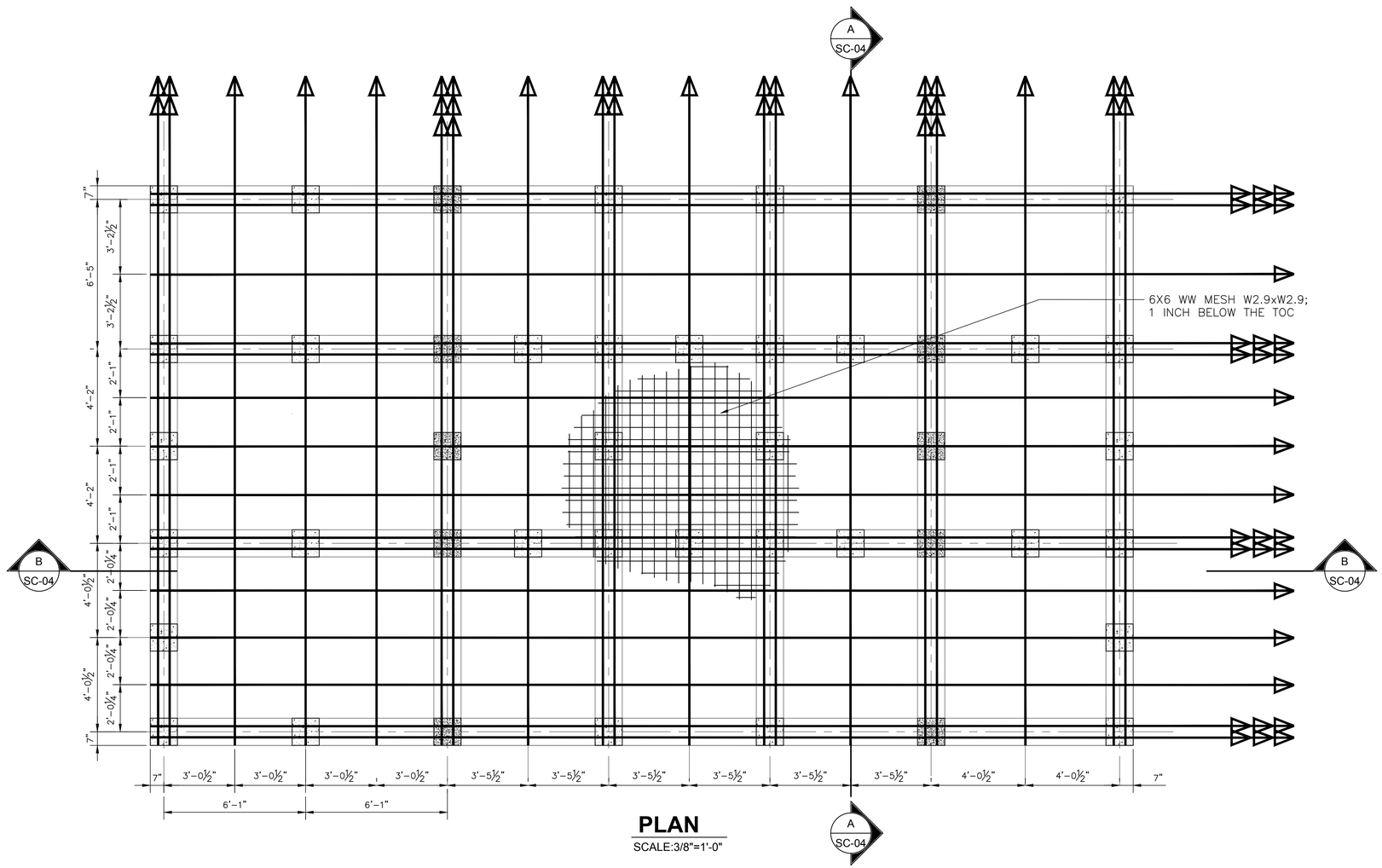

PLAN
SCALE:3/8"=1'-0"

NOTES:

1. SEE SPECIFICATION 03 38 16 POST TENSIONED CONCRETE FOR POST TENSION SLAB
2. CONTRACTOR TO USE CONTINUOUS CABLES, PREPARED FOR THE ENTIRE LENGTH, AND TENSIONED BOTH DIRECTIONS.
3. CONTRACTOR TO USE ANCHORING FROM FACE TO FACE ON THE CONTINUOUS CABLES.
4. MESH 6X6 W2.9xW2.9 WILL BE INSTALLED 1 INCH BELLOW THE TOP OF THE FINISHED SLAB IN THE ENTIRE SLAB AREA.
5. NOTES ON ELONGATION:
   CONTRACTOR WILL INFORM THE ENGINEER OF THE TENSIONING FORCES USED IN OBTAINING THE GIVEN ELONGATION. IF FOUND THAT THE ELONGATION FALLS SHORTER THAN THE PULLING FORCES AS PER CALIBRATED GAUGES, CONTRACTOR WILL PROCEED TO OBTAIN THOSE FORCES. CONTRACTOR TO ACHIEVE THE SPECIFIED ELONGATION. CHECK THE PHYSICAL PROPERTIES OF THE CABLES USED TO MATCH THE MODULUS AND ELONGATION GIVEN.
6. ELONGATION CALCULATIONS SAMPLE:

   PT CONTRACTOR MUST CALCULATE THE ELONGATION AS FOLLOWS:
   LENGTH OF THE CABLE IN FEET TIMES 9.37% AND TENSIONED TO SPECIFICATIONS AND TO THE ALIGNMENT AS SHOWN SEE TYP SECTIONS.

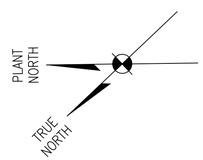

REV.	DATE	DESCRIPTION	BY
A	10-25-19	AS-BUILT MARKUPS	LHN

A THIS SHEET WAS REPLACED ENTIRELY WITH THE VECP DESIGNED BY CARUBBA ENGINEERING, SEE SUL-0159 FOR VECP DESIGN. AS-BUILT DRAWINGS FOR CONTAINMENT PROVIDED BY RLH ARE INCLUDED AS AN APPENDIX TO THIS SET OF AS-BUILT RECORD DRAWINGS.

THIS DOCUMENT ORIGINALLY ISSUED AND SEALED BY IVAN MANDICH, LICENCE No. 15570 ON 2-6-15. THIS DOCUMENT SHOULD NOT BE CONSIDERED A CERTIFIED DOCUMENT.

Trigon
Quality ▲ Commitment ▲ Client Service

TRIGON DWG. NO. SC-04

TRIGON ASSOCIATES, LLC
1515 POYDRAS STREET
SUITE 2200
NEW ORLEANS, LA 70112
TEL: 504-585-5767
trigonassociates.com

SEWERAGE AND WATER BOARD OF NEW ORLEANS

CONTRACT No. 1369

HMGP EMERGENCY FUEL STORAGE
RETROFIT POWER PLANT
MAIN WATER PURIFICATION PLANT POWER COMPLEX

DAY TANK (TK-003)
POST TENSION PLAN AND SECTIONS

DR:	K MCALLISTER
CK:	I MANDICH
AP:	I MANDICH
LAST EDIT:	
SCALE:	AS NOTED
DATE:	JANUARY 28, 2015

GENERAL SUPERINTENDENT

DWG. No. 12098-W8

SET NO: SHEET NO: 31 OF 72

PIPE AND FITTING SYMBOLS

DOUBLE LINE	SINGLE LINE	
		EXISTING PIPE
		NEW PIPE
		EXISTING PIPE TO BE ABANDONED
		EXISTING PIPE TO BE REMOVED
		WELDED JOINT
		GROOVED END JOINT
		FLANGED JOINT
		MECHANICAL JOINT & PROPRIETARY RESTRAINED JOINT
		BELL & SPIGOT JOINT (LEADED)
		HUB & SPIGOT JOINT (RUBBER GASKET)
		BALL JOINT
		ADAPTER SIDE GROOVED END ADAPTER FLANGE
		FLANGED COUPLING ADAPTER
		FLEXIBLE COUPLING
		METAL BELLOWS EXP JOINT
		ELASTOMER BELLOWS EXP JOINT
		ELBOW UP
		ELBOW DOWN
		TEE UP
		TEE DOWN
		LATERAL UP
		LATERAL DOWN
		CONCENTRIC REDUCER
		ECCENTRIC REDUCER
		REDUCING BUSHING
		UNION
		CAP
		ANCHOR
		ELBOW, 90 DEGREE
		CROSS
		TEE
		ELBOW, 45 DEGREE
		LATERAL

FITTING NOTES:

1. ONLY FLANGED END CONNECTIONS ARE SHOWN HERE FOR DOUBLE LINE FITTINGS. FITTINGS WITH OTHER END PATTERNS ARE SHOWN SIMILARLY ON THE CONSTRUCTION DRAWINGS. ALSO SEE PIPING SPECIFICATIONS.
2. SYMBOLS SHOWN HERE FOR SINGLE LINE FITTINGS ARE GENERIC ONLY. REFER TO PIPING SPECIFICATIONS FOR SPECIFIC END CONNECTIONS FOR SINGLE LINE PIPE AND FITTINGS.
3. EXISTING PIPE AND EQUIPMENT IS SHOWN LIGHTER THAN NEW AND IS NOTED AS EXISTING. NEW PIPING AND EQUIPMENT IS SHOWN HEAVY-LINED.

PIPING DESIGNATION

EXAMPLE:

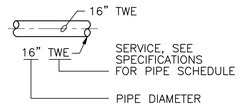

VALVE SYMBOLS

SINGLE LINE	DOUBLE LINE
GATE	
KNIFE GATE	OR
BUTTERFLY	OR
GLOBE	OR
BALL	OR
SEATING PORT ECCENTRIC PLUG	OR
PLUG OR COCK	OR
NEEDLE	OR
DIAPHRAGM	OR
PINCH	OR
SWING CHECK	OR
BALL CHECK	OR
HOSE VALVE (HV- X) OR (V-X) X = NO. IN SPECS	
SAMPLE	
MUD	
PRESSURE RELIEF	
AIR AND/OR VACUUM RELEASE	
REGULATED SIDE PRESSURE CONTROL (INTERNAL PILOT)	
REGULATED SIDE PRESSURE CONTROL (EXTERNAL PILOT)	
MULTI-PORT VALVE, ARROWS INDICATE FLOW PATTERN. SEATING PORTS ARE IMPLIED BY INDICATED FLOW PATTERN.	
TELESCOPING SCUM VALVE	

ACTUATOR SYMBOLS

PNEUMATIC DIAPHRAGM	HYDRAULIC
PNEUMATIC CYLINDER	MANUAL
ELECTRIC MOTOR	SOLENOID
	ELECTRO HYDRAULIC

SELF-CONTAINED REGULATING VALVES

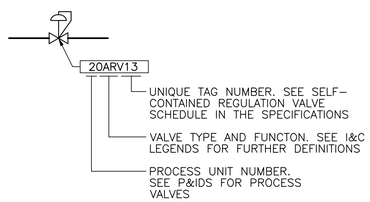

ELEVATION CONVENTION EXAMPLE



NOTE:
SPILLWAY ELEVATION IS 22.06 FT NGVD 29.

VALVE DESIGNATIONS

MANUAL VALVES AND CHECK VALVES

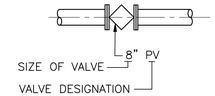

CONTROL VALVES

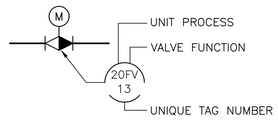

PIPING NOTES:

1. LAY PIPE TO UNIFORM GRADE BETWEEN INDICATED ELEVATION POINTS.
2. SIZE OF FITTINGS SHOWN ON DRAWINGS SHALL CORRESPOND TO ADJACENT STRAIGHT RUN OF PIPE, UNLESS OTHERWISE INDICATED. TYPE OF JOINT AND FITTING MATERIAL SHALL BE THE SAME AS SHOWN FOR ADJACENT STRAIGHT RUN OF PIPE.
3. LOCATION AND NUMBER OF PIPE HANGERS AND PIPE SUPPORTS SHOWN IS APPROXIMATE. CONTRACTOR SHALL DESIGN SUPPORTS AS SPECIFIED.
4. ALL JOINTS SHALL BE WATERTIGHT. WALL PIPES SHALL BE USED WHEREVER PIPING PASSES FROM A STRUCTURE TO BACKFILL.
5. ALL FLEXIBLE CONNECTORS AND COUPLING ADAPTERS SHALL BE PROVIDED WITH THRUST PROTECTION AS SPECIFIED, UNLESS OTHERWISE NOTED. THRUST PROTECTION SHALL BE PROVIDED AT PIPE BENDS AND BE ADEQUATE FOR TEST PRESSURES SPECIFIED.
6. SYMBOLS, LEGENDS, AND PIPE USE IDENTIFICATIONS SHOWN SHALL BE FOLLOWED THROUGHOUT THE DRAWINGS, WHEREVER APPLICABLE. NOT ALL OF THE VARIOUS PIPING COMPONENTS ARE NECESSARILY USED IN THE PROJECT.
7. NUMBER AND LOCATION OF UNIONS SHOWN ON DRAWINGS IS APPROXIMATE. PROVIDE ALL UNIONS NECESSARY TO FACILITATE CONVENIENT REMOVAL OF VALVES AND MECHANICAL EQUIPMENT.
8. WHERE A GROOVED END COUPLING IS SHOWN, IT SHALL BE THE RIGID JOINT TYPE, UNLESS OTHERWISE SPECIFIED. WHERE A FLANGED COUPLING ADAPTER IS SHOWN, A STANDARD FLANGE SHALL BE JOINED TO THE COUPLING ADAPTER.
9. PROVIDE NEEDLE VALVES AT BENDS IN ABOVE GRADE FUEL PIPING.
10. TRANSITIONS FROM ABOVE GRADE TO BELOW GRADE PIPING AND FROM CONTAINMENT SHALL INCLUDE FLEXIBLE COUPLINGS TO ACCOMMODATE DIFFERENTIAL SETTLEMENT.
11. SEE PIPING SPECIFICATIONS FOR PIPE WELDING AND SECTION 05 12 00 FOR PIPE SUPPORT WELDING SYMBOL LEGEND.

REV.	DATE	DESCRIPTION	BY
A	10-25-19	AS-BUILT MARKUPS	LHN

AS-BUILT REVISIONS NOT PROVIDED FOR THIS SHEET BY THE CONTRACTOR.

SEWERAGE AND WATER BOARD OF NEW ORLEANS

CONTRACT No. 1369

HMGP EMERGENCY FUEL STORAGE RETROFIT POWER PLANT
MAIN WATER PURIFICATION PLANT POWER COMPLEX

MECHANICAL SYMBOLOGY AND LEGEND

THIS DOCUMENT ORIGINALLY ISSUED AND SEALED BY LISBETH HABANS NAGRATH, LICENCE No. 36792 ON 2-6-15. THIS DOCUMENT SHOULD NOT BE CONSIDERED A CERTIFIED DOCUMENT.

Trigon
Quality ▲ Commitment ▲ Client Service

TRIGON ASSOCIATES, LLC
1515 POYDRAS STREET
SUITE 2200
NEW ORLEANS, LA 70112
TEL: 504-585-5767

trigonassociates.com

TRIGON DWG. NO. MA-01

DR:	SJ CLARK
CK:	RA CASSANOVA
AP:	LH NAGRATH
LAST EDIT:	
SCALE:	NONE
DATE:	JANUARY 28, 2015

GENERAL SUPERINTENDENT

DWG. No. 12098-W8

SET NO: SHEET NO: 32 OF 72

NOTES:

1. SEE SPECIFICATION SECTION SECTION 01 31 13 PROJECT COORDINATION FOR CONSTRUCTION SEQUENCING.

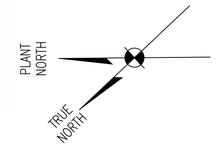

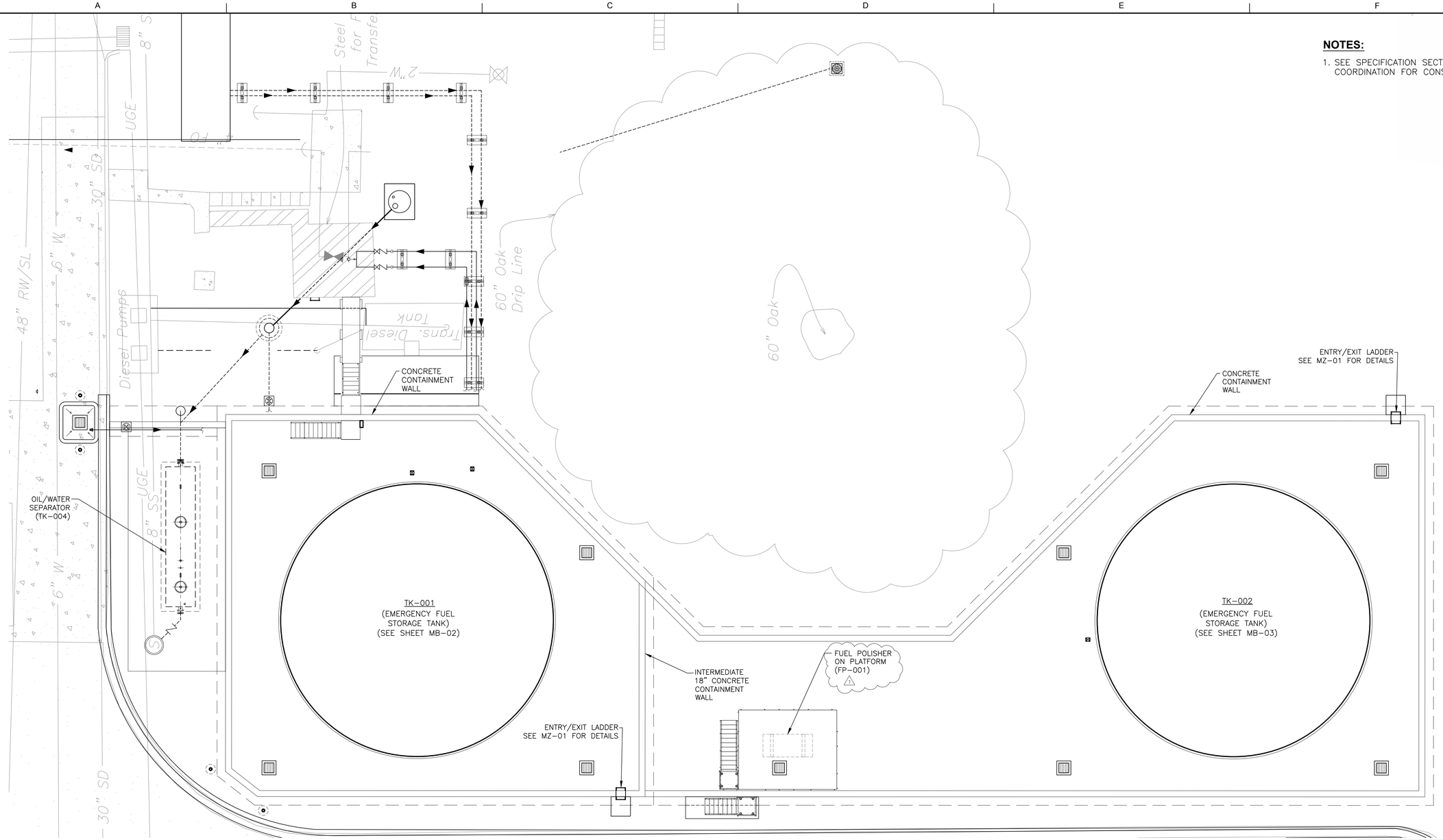

PLAN

SCALE:3/32"=1'-0"

A AS-BUILT REVISIONS NOT PROVIDED FOR THIS SHEET BY THE CONTRACTOR.

REV.	DATE	DESCRIPTION	BY
A	10-25-19	AS-BUILT MARKUPS	LHN
1	3-16-15	REVISED CALL-OUT (ADD.1)	LHN

SEWERAGE AND WATER BOARD OF NEW ORLEANS

CONTRACT No. 1369

HMGP EMERGENCY FUEL STORAGE
RETROFIT POWER PLANT
MAIN WATER PURIFICATION PLANT POWER COMPLEX

FUEL STORAGE TANK CONTAINMENT GENERAL ARRANGEMENT PLAN

THIS DOCUMENT ORIGINALLY ISSUED AND SEALED BY LISBETH HABANS NAGRATH, LICENCE No. 36792 ON 2-6-15. THIS DOCUMENT SHOULD NOT BE CONSIDERED A CERTIFIED DOCUMENT.

Trigon
Quality ▲ Commitment ▲ Client Service

TRIGON ASSOCIATES, LLC
1515 POYDRAS STREET
SUITE 2200
NEW ORLEANS, LA 70112
TEL: 504-585-5767

trigonassociates.com

TRIGON DWG. NO. MB-01

DR.	SJ CLARK
CK:	RA CASSANOVA
AP:	LH NAGRATH
LAST EDIT:	
SCALE:	AS NOTED
DATE:	JANUARY 28, 2015

GENERAL SUPERINTENDENT

DWG. No. 12098-W8

SET NO: SHEET NO. 33 OF 72

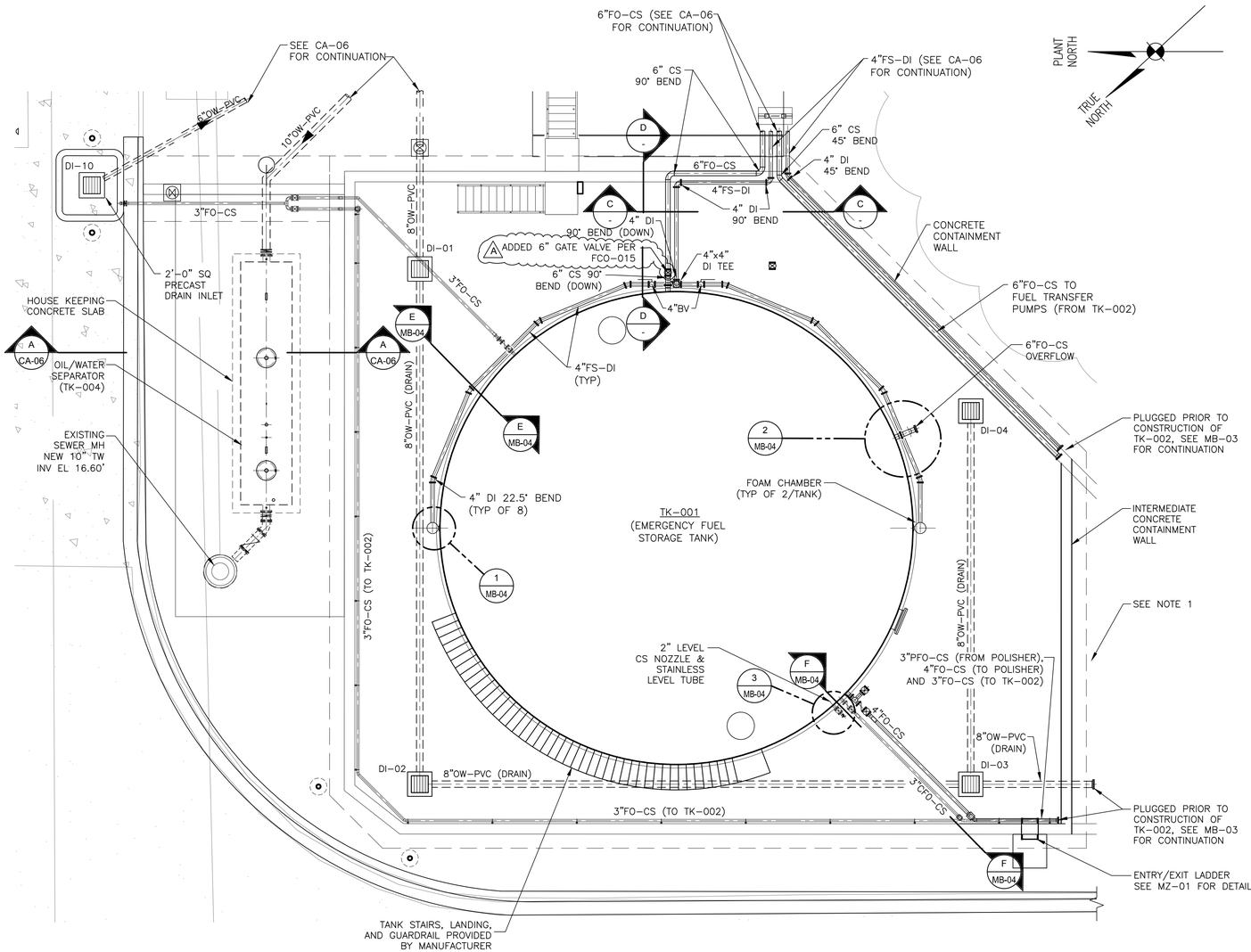

TK-001- PLAN

SCALE: 1/8"=1'-0"

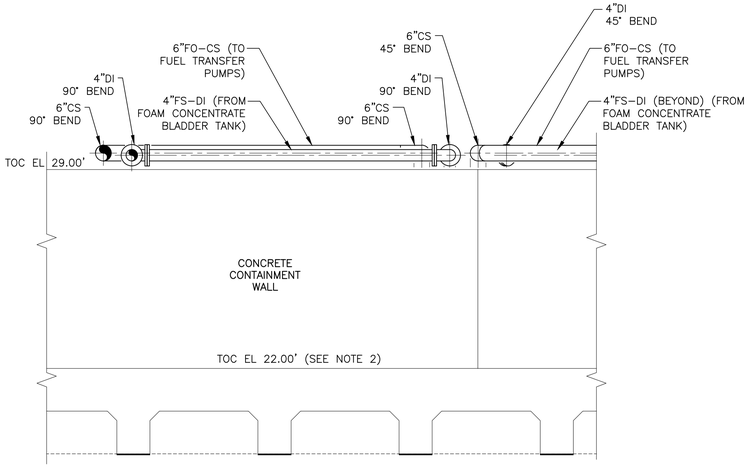

C SECTION

SCALE:3/8"=1'-0"

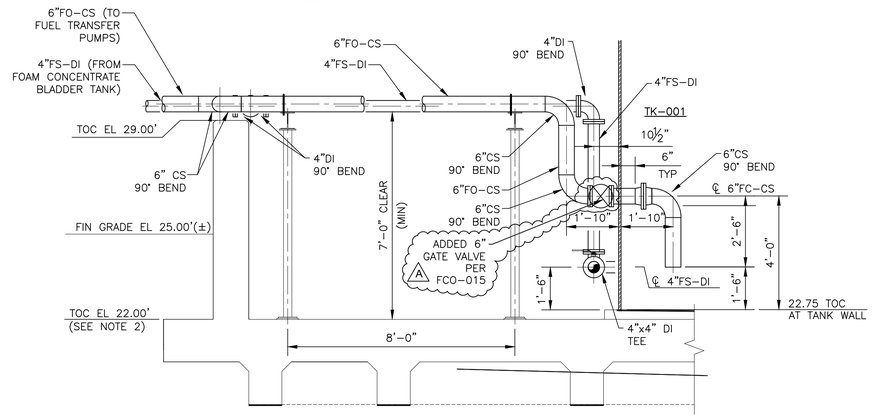

D SECTION

SCALE:3/8"=1'-0"

A SEE SUL-0242 FOR ICFP AS-BUILTS OF FIRE SUPPRESSION SYSTEM PIPING

NOTES:

1. SEE SPECIFICATION SECTION 01 31 13 PROJECT COORDINATION FOR CONSTRUCTION SEQUENCING.
2. THE LOWEST ELEVATION OF THE CONTAINMENT CONCRETE SLAB SHALL BE EL 22.00' AND TOC OF TANK FOUNDATION AT TANK WALL IS 22.75. BOTH ARE REFERENCED AS BASE ELEVATION ON THIS DRAWING. CONTRACTOR TO ADJUST VERTICAL MEASUREMENTS ACCORDING TO CONTAINMENT SLOPING. SEE SHEET SB-01 FOR SLOPING PLAN.
3. PROVIDE NEEDLE VALVES AT BENDS IN FUEL PIPING, NOT SHOWN AT ALL BENDS.

DRAIN INLET	PLANT DIRECTION	INV EL (FT)
DI-01	E	18.47
DI-01	W	18.67
DI-02	E	18.81
DI-02	S	19.01
DI-03	N	19.16
DI-03	S	19.46
DI-03	E	19.46
DI-04	W	19.56
DI-10	S	18.50

SEE MB-03 FOR ADDITIONAL DI LOCATIONS

A OWS PIPING AND DI INVERTS UPDATED PER FCO-014/RFQ-002

REV.	DATE	DESCRIPTION	BY
A	10-25-19	AS-BUILT MARKUPS	LHN

SEWERAGE AND WATER BOARD OF NEW ORLEANS

CONTRACT No. 1369

HMGP EMERGENCY FUEL STORAGE RETROFIT POWER PLANT
MAIN WATER PURIFICATION PLANT POWER COMPLEX

FUEL STORAGE TANK (TK-001) CONTAINMENT PLAN

THIS DOCUMENT ORIGINALLY ISSUED AND SEALED BY LISBETH HABANS NAGRATH, LICENCE No. 36792 ON 2-6-15. THIS DOCUMENT SHOULD NOT BE CONSIDERED A CERTIFIED DOCUMENT.

Trigon
Quality ▲ Commitment ▲ Client Service

TRIGON ASSOCIATES, LLC
1515 POYDRAS STREET
SUITE 2200
NEW ORLEANS, LA 70112
TEL: 504-585-5767

trigonassociates.com

TRIGON DWG. NO. MB-02

DR: SJ CLARK
CK: RA CASSANOVA
AP: LH NAGRATH
LAST EDIT:
SCALE: AS NOTED
DATE: JANUARY 28, 2015

GENERAL SUPERINTENDENT

DWG. No. 12098-W8

SET NO: SHEET NO: 34 OF 72

NOTES:

1. SEE SPECIFICATION SECTION 01 31 13 PROJECT COORDINATION FOR CONSTRUCTION SEQUENCING.
2. THE LOWEST ELEVATION OF THE CONTAINMENT CONCRETE SLAB SHALL BE EL 22.00' AND TOC OF TANK FOUNDATION AT TANK WALL IS 22.75, BOTH ARE REFERENCED AS BASE ELEVATION ON THIS DRAWING. CONTRACTOR TO ADJUST VERTICAL MEASUREMENTS ACCORDING TO CONTAINMENT SLOPING. SEE SHEET SB-01 FOR SLOPING PLAN.
3. PROVIDE NEEDLE VALVES AT BENDS IN FUEL PIPING, NOT SHOWN AT ALL BENDS.

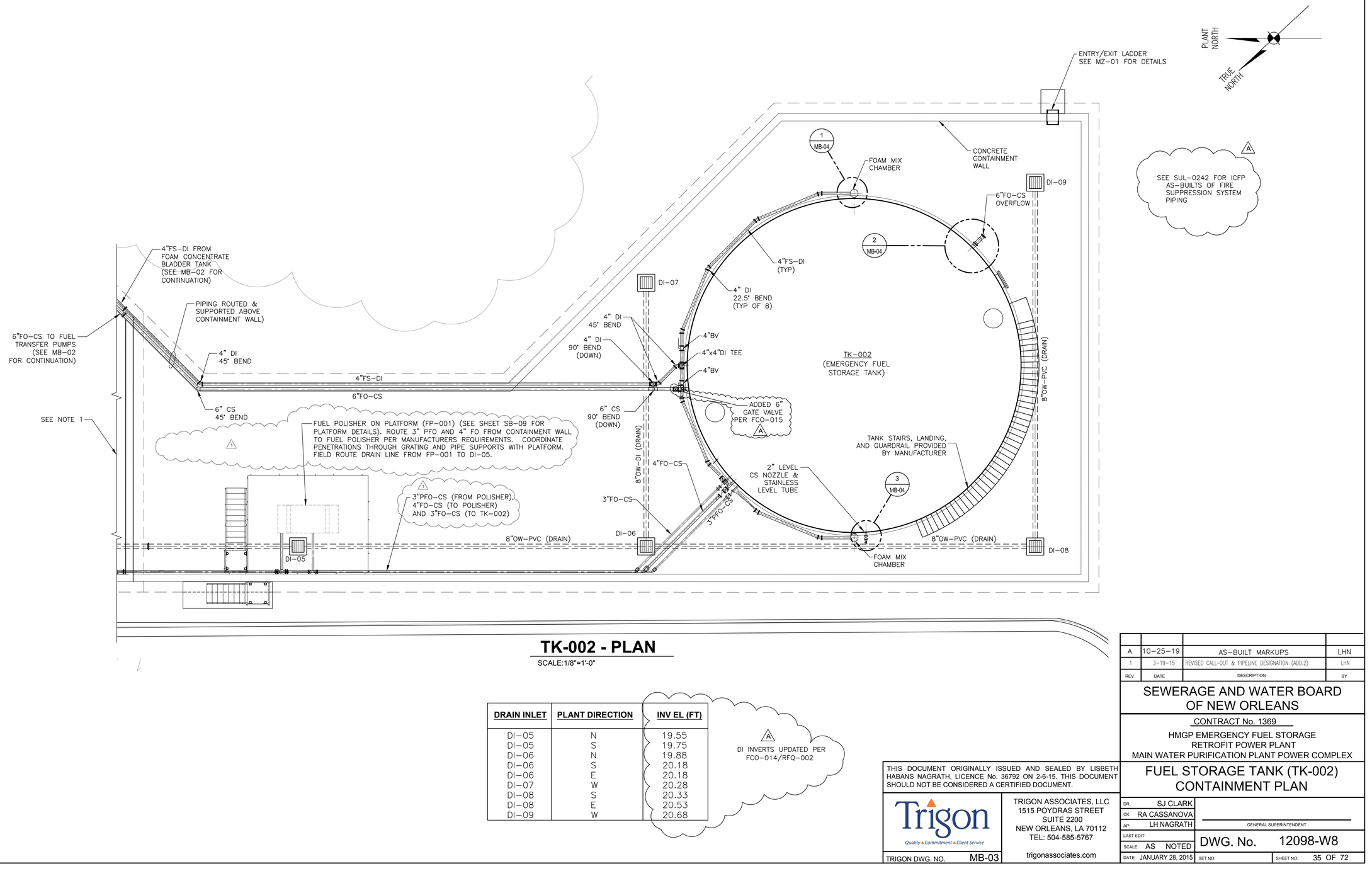

TK-002 - PLAN

SCALE:1/8"=1'-0"

DRAIN INLET	PLANT DIRECTION	INV EL (FT)
DI-05	N	19.55
DI-05	S	19.75
DI-06	N	19.88
DI-06	S	20.18
DI-06	E	20.18
DI-07	W	20.28
DI-08	S	20.33
DI-08	E	20.53
DI-09	W	20.68

A DI INVERTS UPDATED PER FCO-014/RFQ-002

REV.	DATE	DESCRIPTION	BY
A	10-25-19	AS-BUILT MARKUPS	LHN
1	3-19-15	REVISED CALL-OUT & PIPELINE DESIGNATION (ADD.2)	LHN

SEWERAGE AND WATER BOARD OF NEW ORLEANS

CONTRACT No. 1369

HMGP EMERGENCY FUEL STORAGE RETROFIT POWER PLANT
MAIN WATER PURIFICATION PLANT POWER COMPLEX

FUEL STORAGE TANK (TK-002) CONTAINMENT PLAN

THIS DOCUMENT ORIGINALLY ISSUED AND SEALED BY LISBETH HABANS NAGRATH, LICENCE No. 36792 ON 2-6-15. THIS DOCUMENT SHOULD NOT BE CONSIDERED A CERTIFIED DOCUMENT.

Trigon
Quality ▲ Commitment ▲ Client Service

TRIGON ASSOCIATES, LLC
1515 POYDRAS STREET
SUITE 2200
NEW ORLEANS, LA 70112
TEL: 504-585-5767

trigonassociates.com

TRIGON DWG. NO. MB-03

DR:	SJ CLARK
CK:	RA CASSANOVA
AP:	LH NAGRATH
LAST EDIT:	
SCALE:	AS NOTED
DATE:	JANUARY 28, 2015

GENERAL SUPERINTENDENT

DWG. No. 12098-W8

SET NO: SHEET NO: 35 OF 72

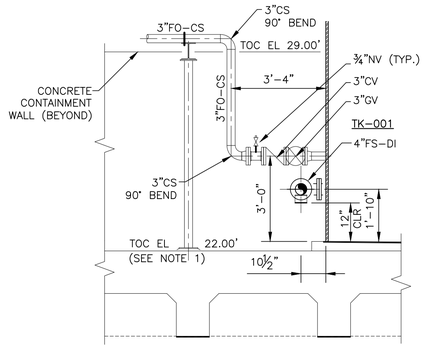

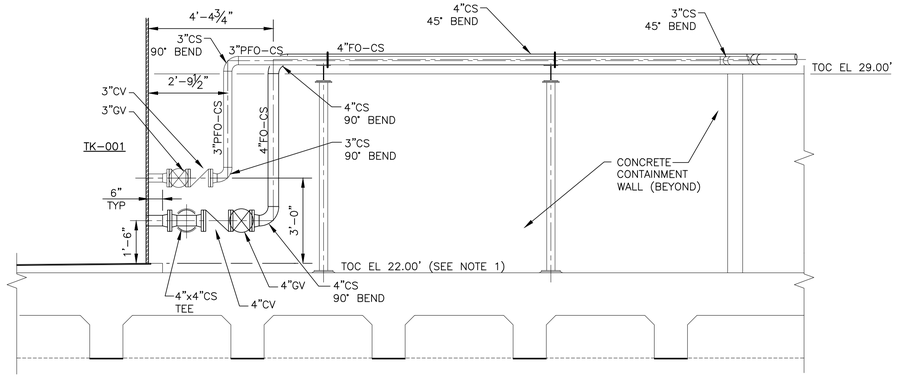

NOTES:

1. THE LOWEST ELEVATION OF THE CONTAINMENT CONCRETE SLAB SHALL BE EL 22.00' AND TOC OF TANK FOUNDATION AT TANK WALL IS 22.75. BOTH ARE REFERENCED AS BASE ELEVATION ON THIS DRAWING. CONTRACTOR TO ADJUST VERTICAL MEASUREMENTS ACCORDING TO CONTAINMENT SLOPING. SEE SHEET SB-01 FOR SLOPING PLAN.
2. PROVIDE NEEDLE VALVES AT BENDS IN FUEL PIPING, NOT SHOWN AT ALL BENDS.

E SECTION
MB-02 SCALE:3/8"=1'-0"

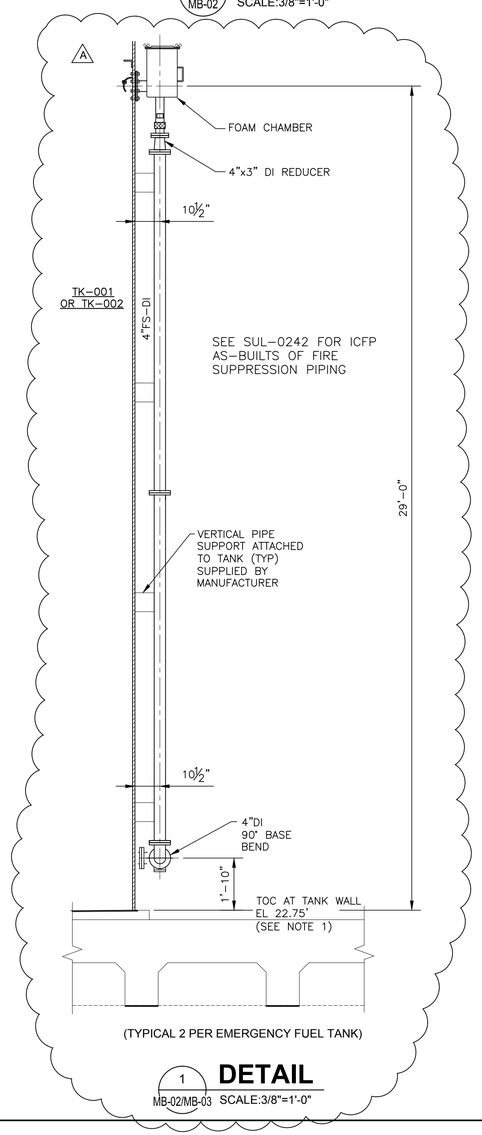

(TYPICAL 2 PER EMERGENCY FUEL TANK)

1 DETAIL
MB-02/MB-03 SCALE:3/8"=1'-0"

F SECTION
MB-02 SCALE:3/8"=1'-0"

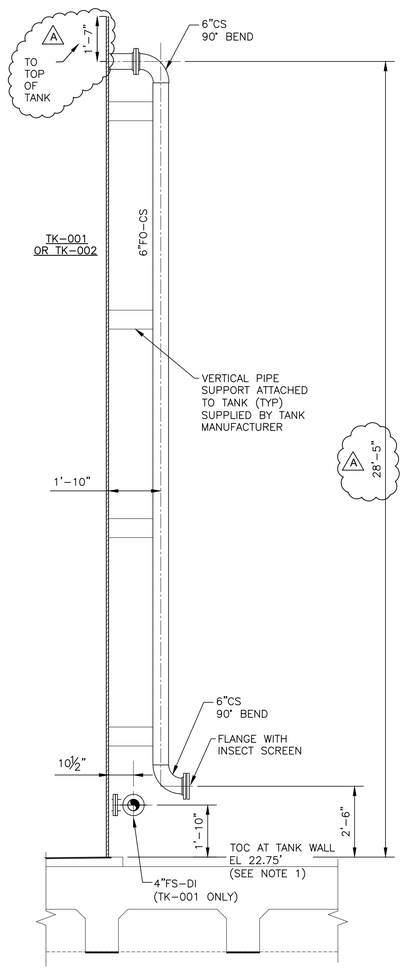

2 DETAIL
MB-02/MB-03 SCALE:3/8=1'-0"

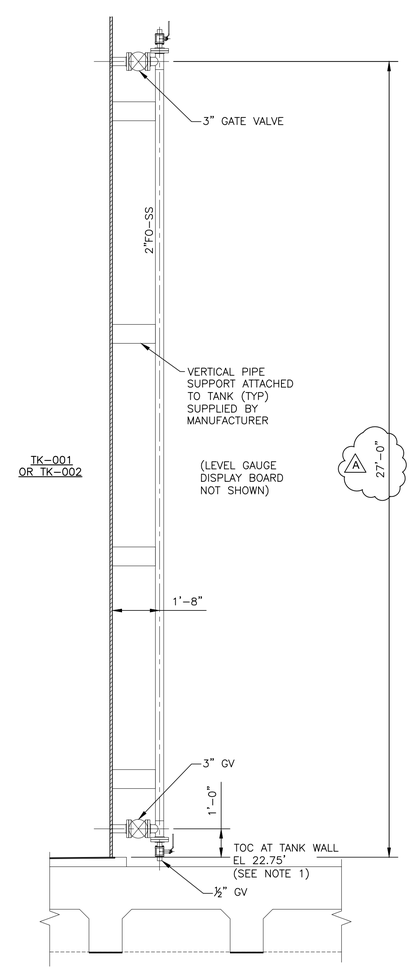

3 DETAIL
MB-02/MB-03 SCALE:3/8=1'-0"

THIS DOCUMENT ORIGINALLY ISSUED AND SEALED BY LISBETH HABANS NAGRATH, LICENCE No. 36792 ON 2-6-15. THIS DOCUMENT SHOULD NOT BE CONSIDERED A CERTIFIED DOCUMENT.

Trigon
Quality ▲ Commitment ▲ Client Service

TRIGON ASSOCIATES, LLC
1515 POYDRAS STREET
SUITE 2200
NEW ORLEANS, LA 70112
TEL: 504-585-5767

trigonassociates.com

TRIGON DWG. NO. MB-04

REV.	DATE	DESCRIPTION	BY
A	10-25-19	AS-BUILT MARKUPS	LHN

SEWERAGE AND WATER BOARD OF NEW ORLEANS

CONTRACT No. 1369

HMGP EMERGENCY FUEL STORAGE
RETROFIT POWER PLANT
MAIN WATER PURIFICATION PLANT POWER COMPLEX

FUEL STORAGE TANK CONTAINMENT SECTIONS AND DETAILS

DR:	SJ CLARK
CK:	GA KOLENOVSKY
AP:	LH NAGRATH
LAST EDIT:	
SCALE:	AS NOTED
DATE:	JANUARY 28, 2015

GENERAL SUPERINTENDENT

DWG. No. 12098-W8

SET NO: SHEET NO: 36 OF 72

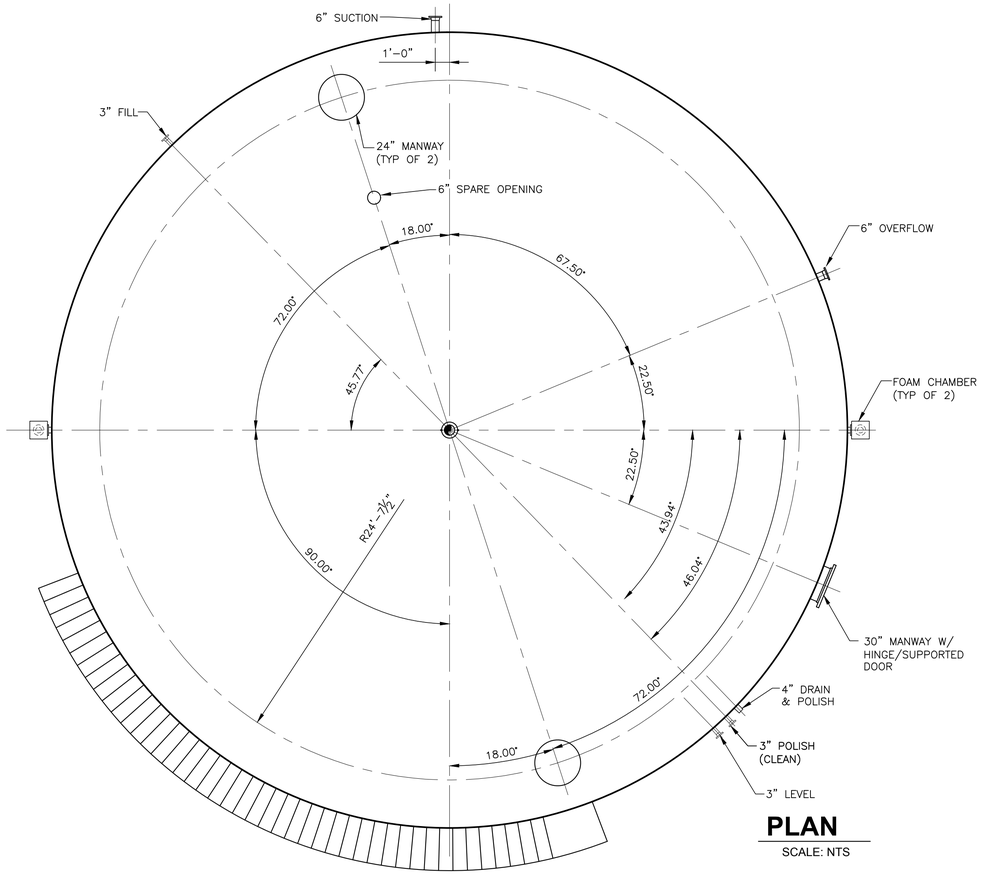

PLAN

SCALE: NTS

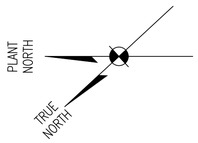

FUEL STORAGE TANK (TK-001) NOTES:

1. FLANGE BOLT HOLES TO STRADDLE NORMAL VESSEL CENTERLINES, UNLESS OTHERWISE NOTED.
2. VESSEL SHALL BE CLEANED INSIDE & OUTSIDE; FREE OF DIRT, GREASE, DEBRIS, WELD SPLATTER, LOOSE MILL SCALE, ETC.
3. ITEMS APPEARING IN ELEVATION VIEW ARE FOR VERTICAL INFORMATION ONLY. SEE PLAN VIEW FOR HORIZONTAL INFORMATION.
4. INTERIOR OF TANK SHALL BE FULLY COATED IN ACCORDANCE WITH THE SPECIFICATIONS.

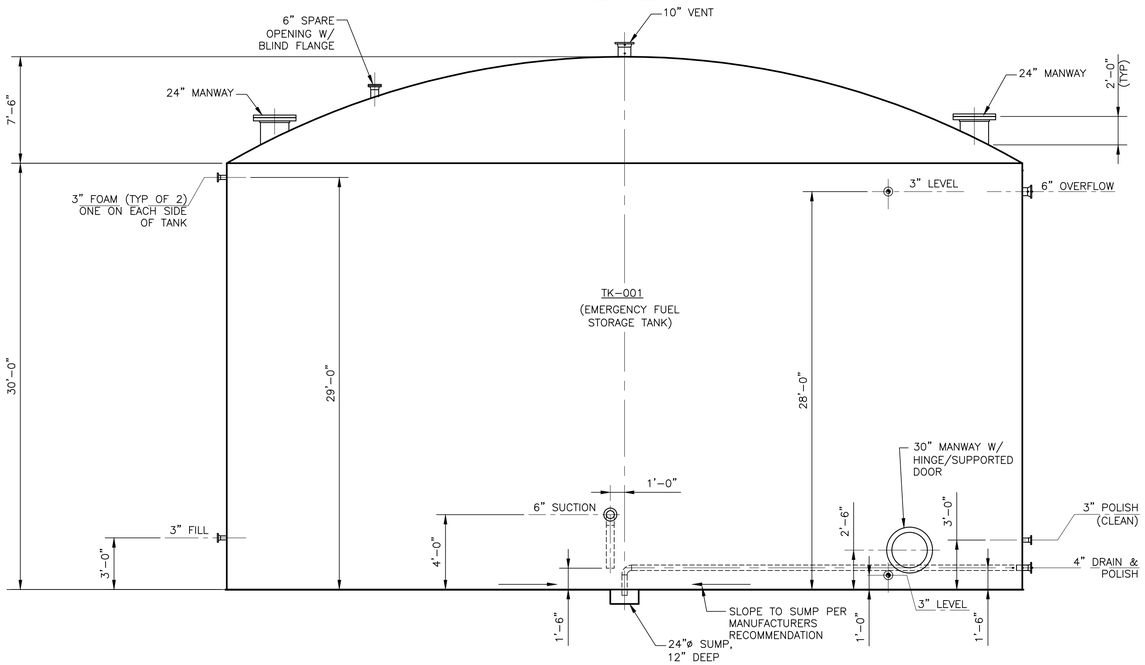

ELEVATION

SCALE: NTS

REV.	DATE	DESCRIPTION	BY
A	10-25-19	AS-BUILT MARKUPS	LHN

SEWERAGE AND WATER BOARD OF NEW ORLEANS

CONTRACT No. 1369

HMGP EMERGENCY FUEL STORAGE
RETROFIT POWER PLANT
MAIN WATER PURIFICATION PLANT POWER COMPLEX

FUEL STORAGE TANK (TK-001)
NOZZLE & DESIGN DATA

A TK-001 AS-BUILT INFORMATION PROVIDED BY JMW IN SUL-0222

THIS DOCUMENT ORIGINALLY ISSUED AND SEALED BY LISBETH HABANS NAGRATH, LICENCE No. 36792 ON 2-6-15. THIS DOCUMENT SHOULD NOT BE CONSIDERED A CERTIFIED DOCUMENT.

Trigon
Quality ▲ Commitment ▲ Client Service

TRIGON ASSOCIATES, LLC
1515 POYDRAS STREET
SUITE 2200
NEW ORLEANS, LA 70112
TEL: 504-585-5767

trigonassociates.com

TRIGON DWG. NO. MB-05

DR.	SJ CLARK
CK:	RA CASSANOVA
AP:	LH NAGRATH
LAST EDIT:	
SCALE:	AS NOTED
DATE:	JANUARY 28, 2015

GENERAL SUPERINTENDENT

DWG. No. 12098-W8

SET NO: SHEET NO: 37 OF 72

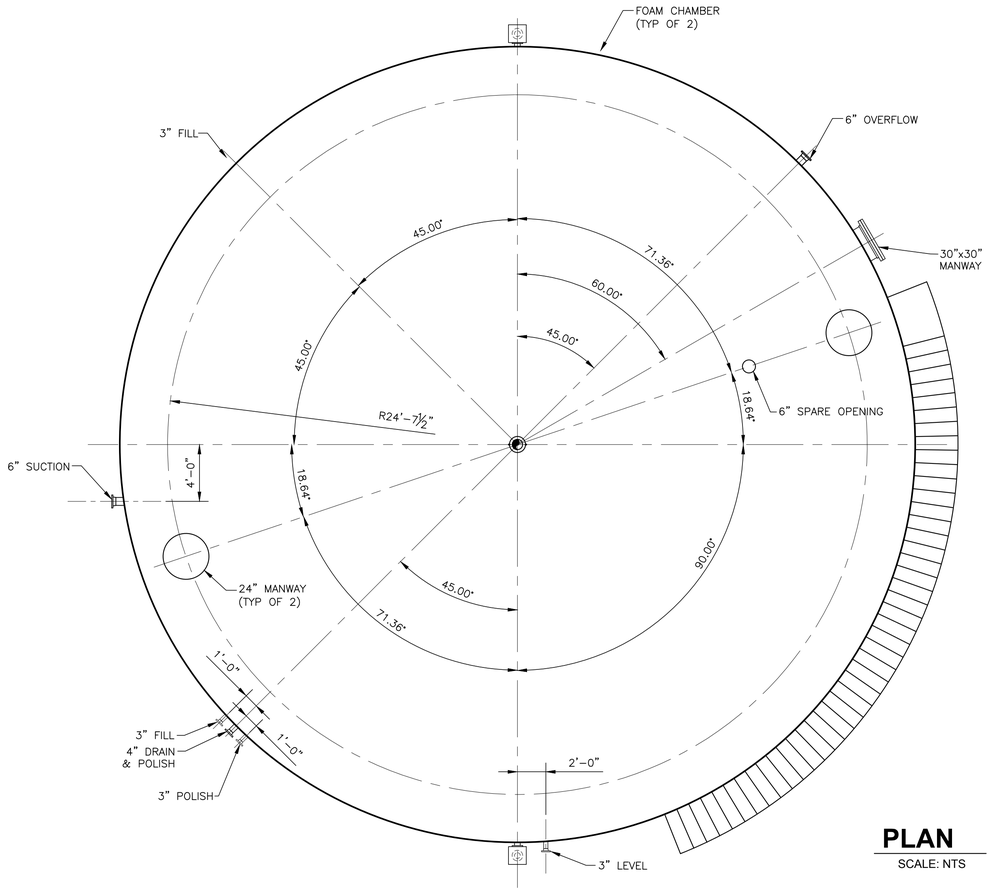

PLAN

SCALE: NTS

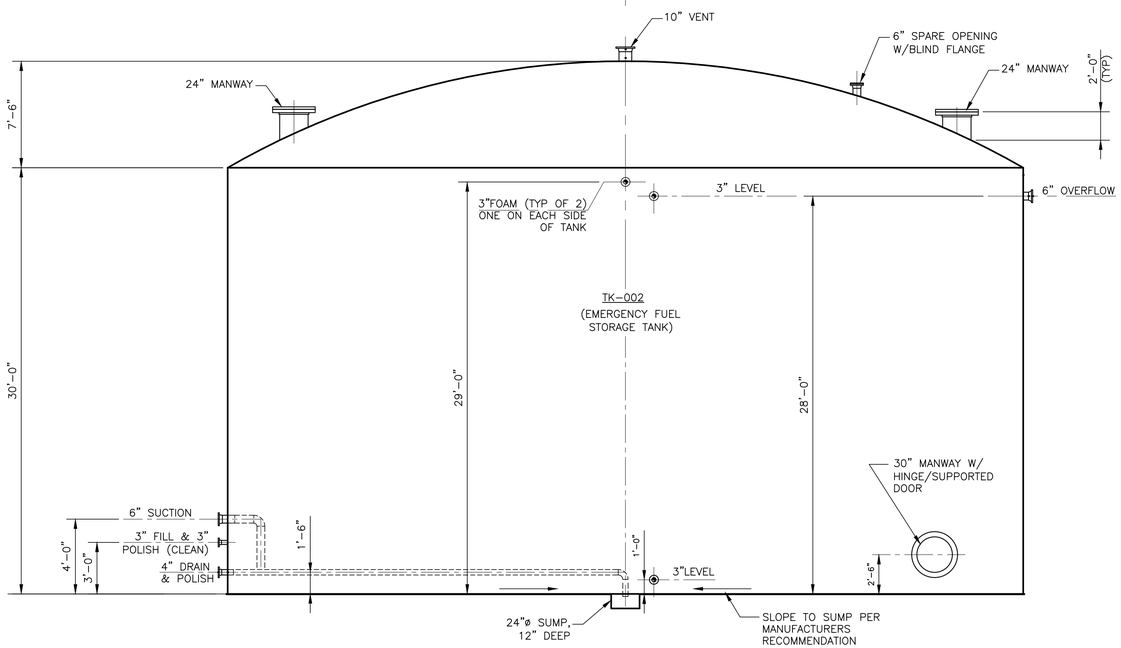

ELEVATION

SCALE: NTS

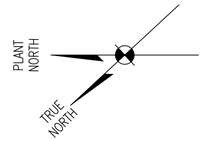

FUEL STORAGE TANK (TK-002) NOTES:

1. FLANGE BOLT HOLES TO STRADDLE NORMAL VESSEL CENTERLINES, UNLESS OTHERWISE NOTED.
2. VESSEL SHALL BE CLEANED INSIDE & OUTSIDE; FREE OF DIRT, GREASE, DEBRIS, WELD SPLATTER, LOOSE MILL SCALE, ETC.
3. ITEMS APPEARING IN ELEVATION VIEW ARE FOR VERTICAL INFORMATION ONLY. SEE PLAN VIEW FOR HORIZONTAL INFORMATION.
4. INTERIOR OF TANK SHALL BE FULLY COATED IN ACCORDANCE WITH THE SPECIFICATIONS.

A TK-002 AS-BUILT INFORMATION PROVIDED BY JMW IN SUL-0237

THIS DOCUMENT ORIGINALLY ISSUED AND SEALED BY LISBETH HABANS NAGRATH, LICENCE No. 36792 ON 2-6-15. THIS DOCUMENT SHOULD NOT BE CONSIDERED A CERTIFIED DOCUMENT.

REV.	DATE	DESCRIPTION	BY
A	10-25-19	AS-BUILT MARKUPS	LHN

SEWERAGE AND WATER BOARD OF NEW ORLEANS

CONTRACT No. 1369

HMGP EMERGENCY FUEL STORAGE
RETROFIT POWER PLANT
MAIN WATER PURIFICATION PLANT POWER COMPLEX

FUEL STORAGE TANK (TK-002)
NOZZLE & DESIGN DATA

Trigon
Quality ▲ Commitment ▲ Client Service

TRIGON ASSOCIATES, LLC
1515 POYDRAS STREET
SUITE 2200
NEW ORLEANS, LA 70112
TEL: 504-585-5767

trigonassociates.com

DR:	SJ CLARK
CK:	RA CASSANOVA
AP:	LH NAGRATH
LAST EDIT:	
SCALE:	AS NOTED
DATE:	JANUARY 28, 2015

GENERAL SUPERINTENDENT

DWG. No. 12098-W8

TRIGON DWG. NO. MB-06

SET NO: 38 OF 72

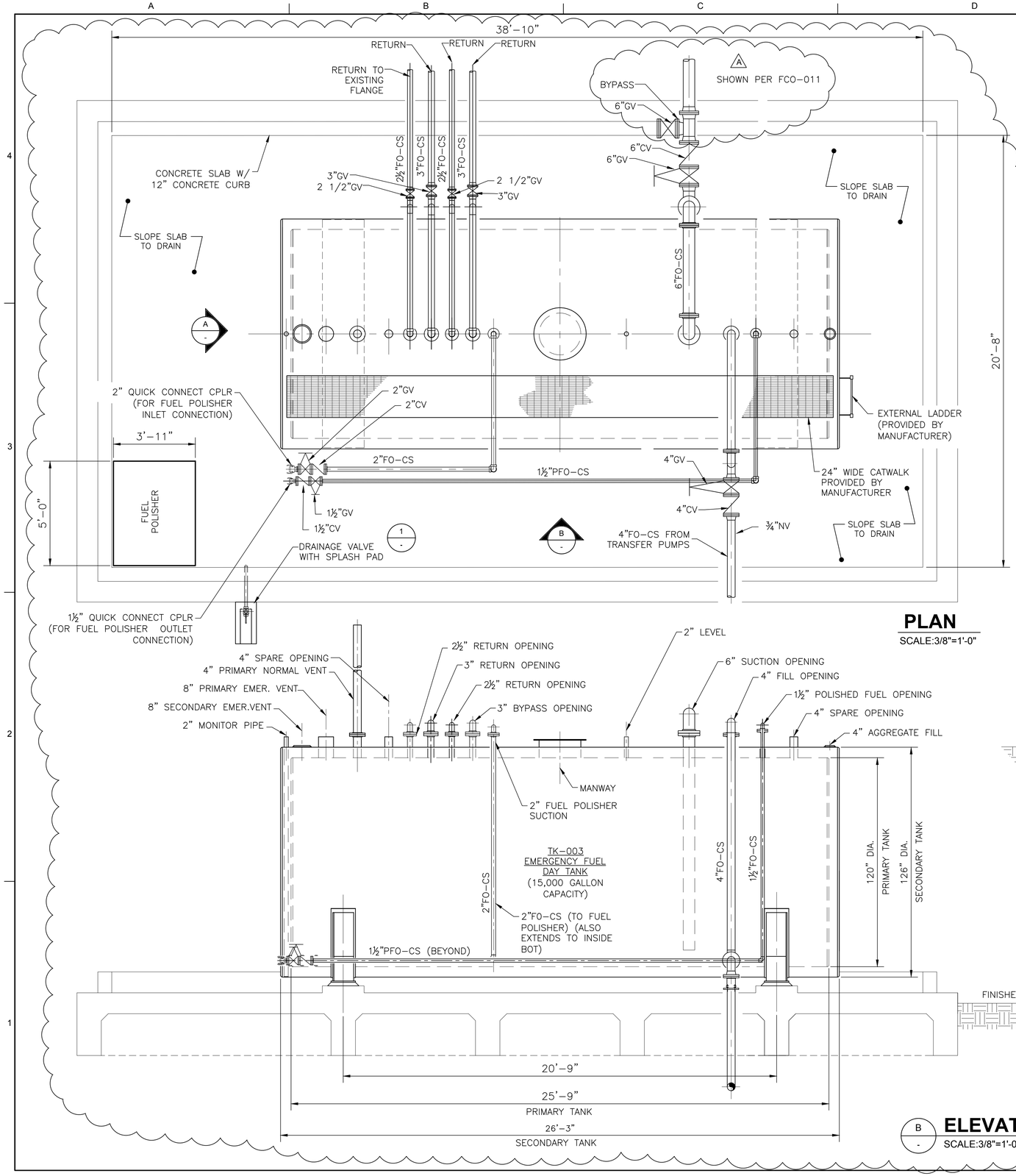

PLAN
SCALE:3/8"=1'-0"

B ELEVATION
SCALE:3/8"=1'-0"

PLANT NORTH
TRUE NORTH

A
PIPING AND NOZZLE MODIFICATIONS PER DAY TANK SUL-0088 AND SUL-0243 HAND SKETCHED DRAWINGS

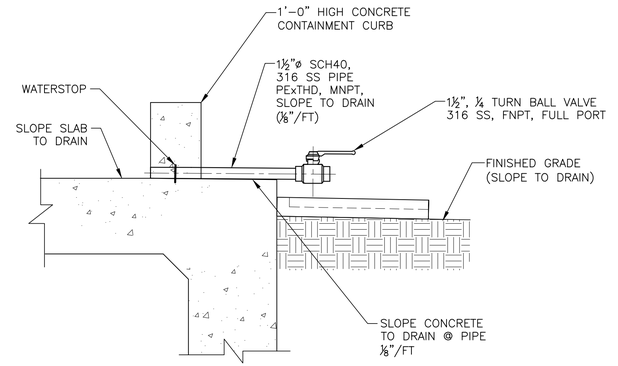

1 - DETAIL
SCALE:1"=1'-0"

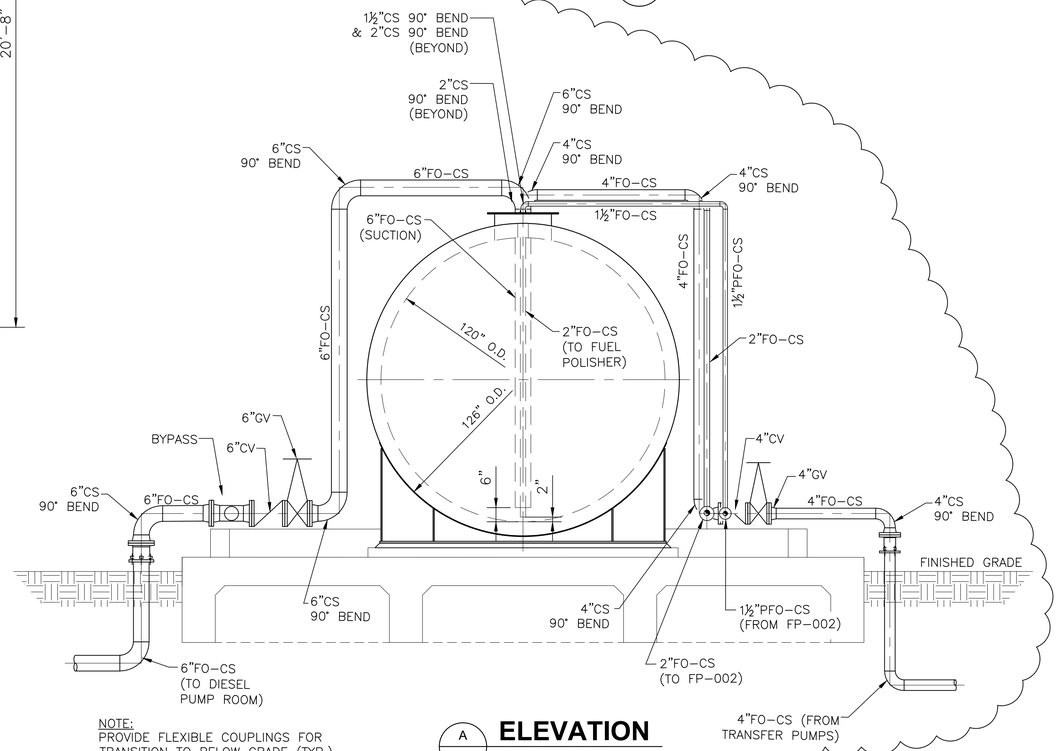

NOTE:
PROVIDE FLEXIBLE COUPLINGS FOR TRANSITION TO BELOW GRADE (TYP.)

A ELEVATION
SCALE:3/8"=1'-0"

REV.	DATE	DESCRIPTION	BY
A	10-25-19	AS-BUILT MARKUPS	LHN

SEWERAGE AND WATER BOARD OF NEW ORLEANS

CONTRACT No. 1369

HMGP EMERGENCY FUEL STORAGE
RETROFIT POWER PLANT
MAIN WATER PURIFICATION PLANT POWER COMPLEX

DAY TANK (TK-003) PLAN, ELEVATION AND SECTION

THIS DOCUMENT ORIGINALLY ISSUED AND SEALED BY LISBETH HABANS NAGRATH, LICENCE No. 36792 ON 2-6-15. THIS DOCUMENT SHOULD NOT BE CONSIDERED A CERTIFIED DOCUMENT.

Trigon
Quality ▲ Commitment ▲ Client Service
TRIGON DWG. NO. MC-01

TRIGON ASSOCIATES, LLC
1515 POYDRAS STREET
SUITE 2200
NEW ORLEANS, LA 70112
TEL: 504-585-5767
trigonassociates.com

DR:	SJ CLARK
CK:	RA CASSANOVA
AP:	LH NAGRATH
LAST EDIT:	
SCALE:	AS NOTED
DATE:	JANUARY 28, 2015

GENERAL SUPERINTENDENT

DWG. No. 12098-W8

SHEET NO: 39 OF 72

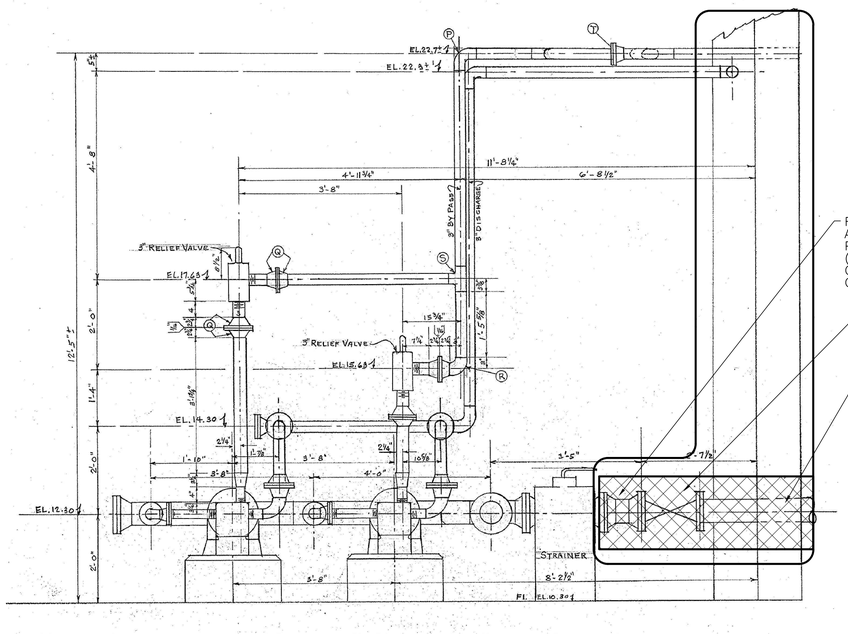

REMOVE EXISTING SPOOL PIECE AND REPLACE WITH NEW SPOOL PIECE WITH WELD NECK FLANGES (8) BOLT HOLE FLANGE FOR CONNECTION TO STRAINER AND CONNECTION TO VALVE.

REMOVE EXISTING 6" PLUG VALVE

REMOVE EXISTING 6" PIPE THRU WALL & PATCH WITH LIKE MATERIALS

REFERENCE SECTION
DIESEL PUMP ROOM (BASEMENT)
SCALE: NTS (SEE NOTE 1)

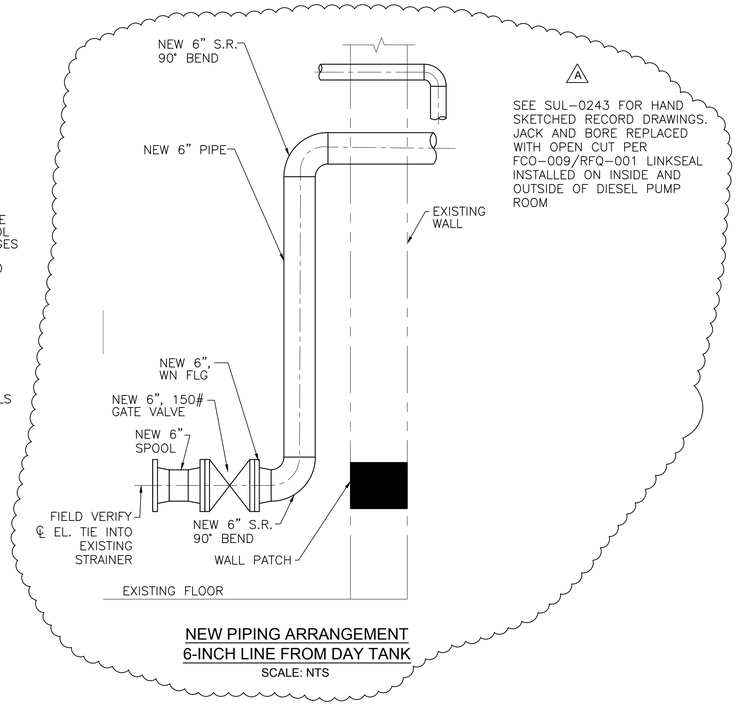

NEW PIPING ARRANGEMENT
6-INCH LINE FROM DAY TANK
SCALE: NTS

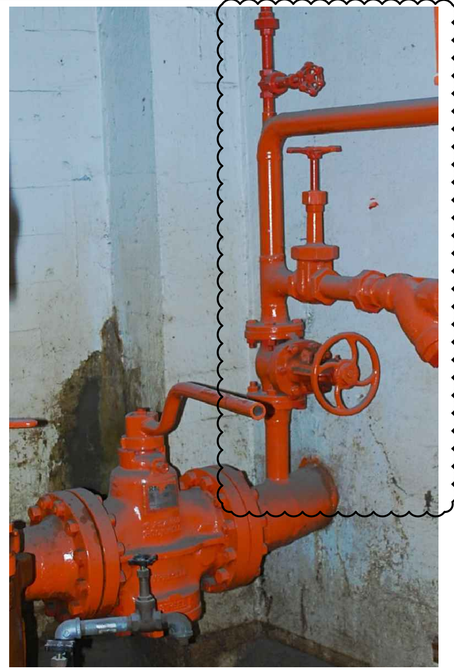

FIELD ROUTE EXISTING PIPING TO NEW 6-INCH PIPE

DIESEL PUMP ROOM (BASEMENT)
SCALE: NTS

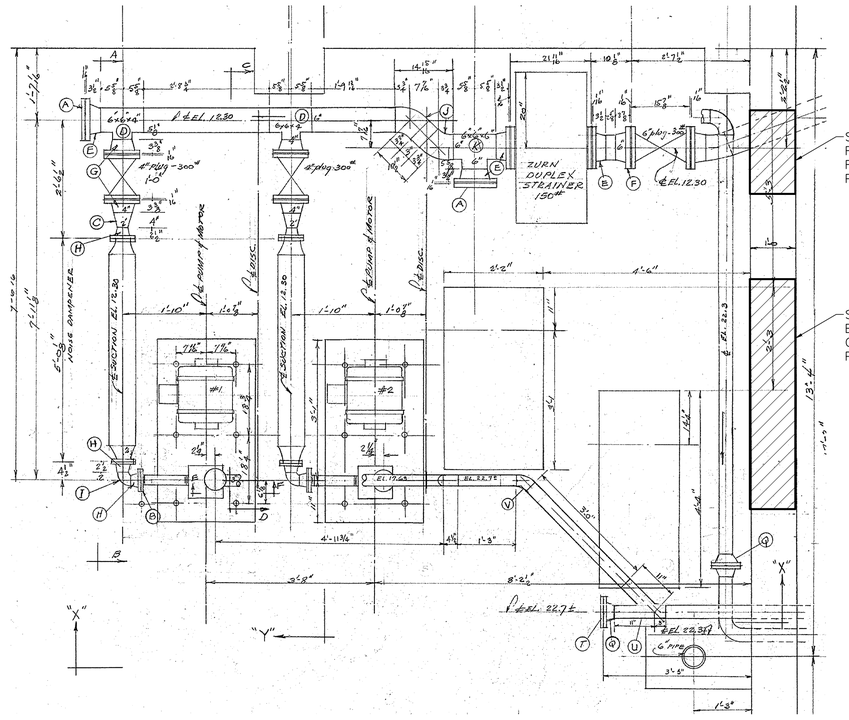

SEE DETAIL 2/SA-02 FOR 6-INCH FO PIPING WALL PENETRATION

SEE DETAIL 1/SA-02 FOR ELECTRICAL AND CONTROLS WALL PENETRATION

REFERENCE PLAN
DIESEL PUMP ROOM (BASEMENT)
SCALE: NTS (SEE NOTE 1)

GENERAL NOTES:

1. THE BACKGROUNDS SHOWN ON THIS DRAWING ARE COPIES OF SWBNO DRAWING NO. 10974-W2, SHEETS 4 OF 5 AND 5 OF 5, DATED 8-23-63 AND 9-5-63. THIS BACKGROUND HAS BEEN INCLUDED FOR REFERENCE ONLY.
2. ELEVATIONS SHOWN ON REFERENCE SECTION DO NOT CORRESPOND TO SURVEY DATUM. FIELD VERIFY PIPING ELEVATIONS.

REV.	DATE	DESCRIPTION	BY
A	10-25-19	AS-BUILT MARKUPS	LHN

SEWERAGE AND WATER BOARD OF NEW ORLEANS

CONTRACT No. 1369

HMGP EMERGENCY FUEL STORAGE
RETROFIT POWER PLANT
MAIN WATER PURIFICATION PLANT POWER COMPLEX

DIESEL PUMP ROOM - PIPE PENETRATIONS/VALVE REPLACEMENT

THIS DOCUMENT ORIGINALLY ISSUED AND SEALED BY LISBETH HABANS NAGRATH, LICENCE No. 36792 ON 2-6-15. THIS DOCUMENT SHOULD NOT BE CONSIDERED A CERTIFIED DOCUMENT.

Trigon
Quality ▲ Commitment ▲ Client Service

TRIGON ASSOCIATES, LLC
1515 POYDRAS STREET
SUITE 2200
NEW ORLEANS, LA 70112
TEL: 504-585-5767

trigonassociates.com

TRIGON DWG. NO. MD-01

DR:	SJ CLARK
CK:	RA CASSANOVA
AP:	LH NAGRATH
LAST EDIT:	
SCALE:	AS NOTED
DATE:	JANUARY 28, 2015

GENERAL SUPERINTENDENT

DWG. No. 12098-W8

SET NO: SHEET NO: 40 OF 72

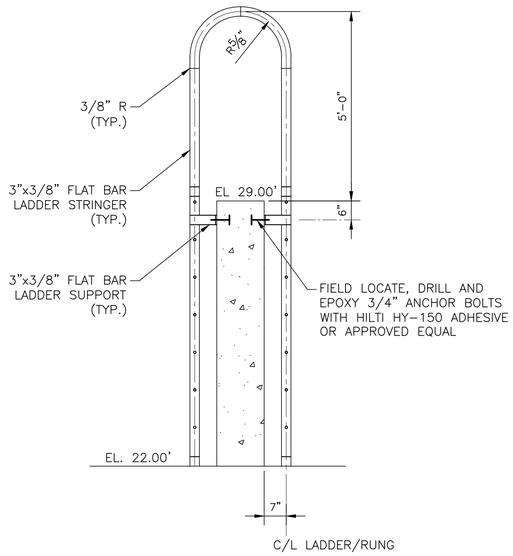

SIDE-VIEW

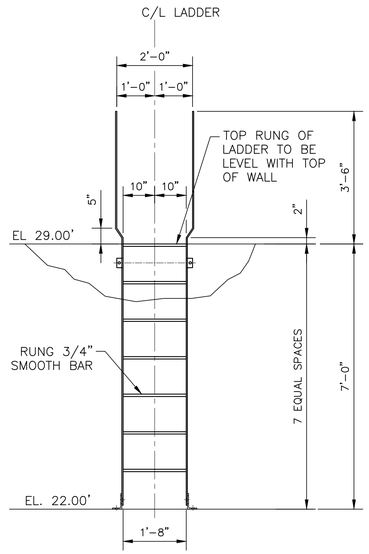

FRONT-VIEW

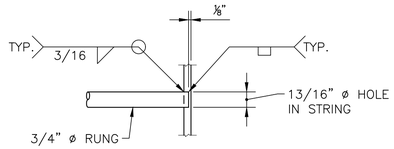

RUNG CONNECTION

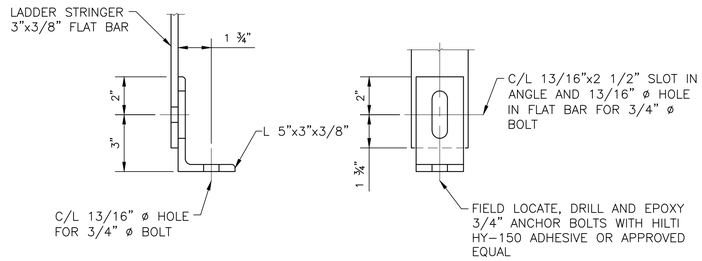

FEET CONNECTION

CONTAINMENT LADDER

1 / - TYPICAL CONTAINMENT LADDER DETAIL

SCALE:1/2"=1'-0"

A AS-BUILT REVISIONS NOT PROVIDED FOR THIS SHEET BY THE CONTRACTOR.

THIS DOCUMENT ORIGINALLY ISSUED AND SEALED BY LISBETH HABANS NAGRATH, LICENCE No. 36792 ON 2-6-15. THIS DOCUMENT SHOULD NOT BE CONSIDERED A CERTIFIED DOCUMENT.

Trigon
Quality ▲ Commitment ▲ Client Service

TRIGON DWG. NO. MZ-01

TRIGON ASSOCIATES, LLC
1515 POYDRAS STREET
SUITE 2200
NEW ORLEANS, LA 70112
TEL: 504-585-5767
trigonassociates.com

REV.	DATE	DESCRIPTION	BY
A	10-25-19	AS-BUILT MARKUPS	LHN

SEWERAGE AND WATER BOARD
OF NEW ORLEANS

CONTRACT No. 1369

HMGP EMERGENCY FUEL STORAGE
RETROFIT POWER PLANT
MAIN WATER PURIFICATION PLANT POWER COMPLEX

MECHANICAL
DETAILS

DR: SJ CLARK
CK: RA CASSANOVA
AP: LH NAGRATH
LAST EDIT:
SCALE: AS NOTED
DATE: JANUARY 28, 2015

GENERAL SUPERINTENDENT

DWG. No. 12098-W8

SET NO: SHEET NO: 41 OF 72

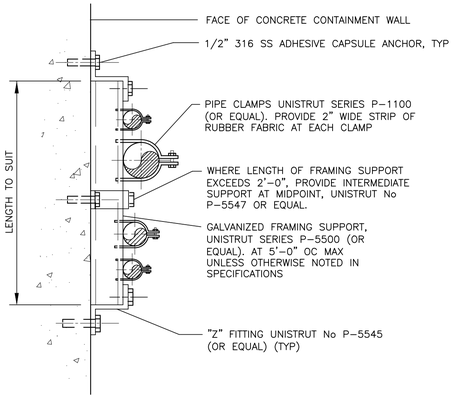

FLUSH MOUNTED PIPE SUPPORT

1 / - **DETAIL**
SCALE: NOT TO SCALE

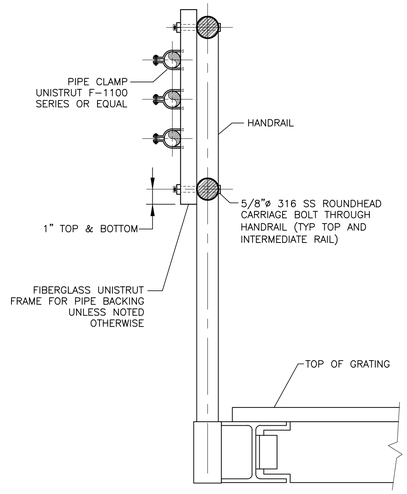

HANDRAIL SUPPORTED PIPE

2 / - **DETAIL**
SCALE: NOT TO SCALE

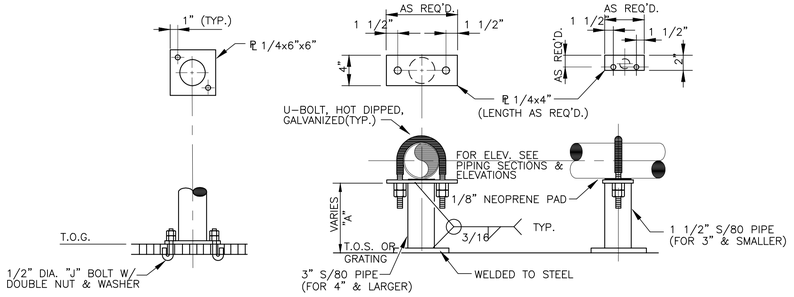

PIPE SUPPORT ON GRATING OR STEEL

5 / - **DETAIL**
SCALE: NOT TO SCALE

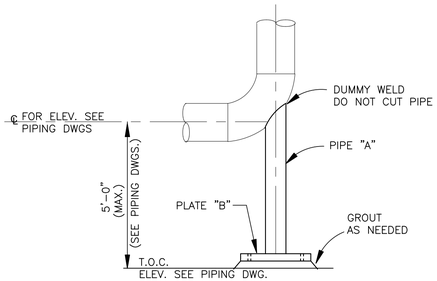

LINE SIZE	PIPE "A"	PLATE "B"
2"	1 1/2" SCH. 80	7"x7"x3/8"
3" & 4"	2" SCH. 40	8"x8"x3/8"
6" & 8"	3" SCH. 40	9"x9"x1/2"
10" & 12"	4" SCH. 40	10"x10"x1/2"
14" & 16"	6" SCH. 40	12"x12"x1/2"
18" & 24"	8" SCH. 40	14"x14"x3/4"
26" & 36"	12"-3/8" WALL	18"x18"x3/4"

PIPE SUPPORT @ BASE ELL

6 / - **DETAIL**
SCALE: NOT TO SCALE

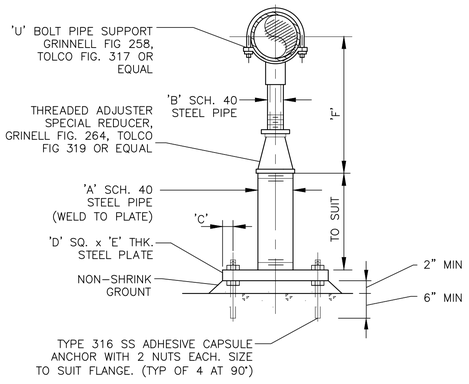

DIMENSIONS IN INCHES (APPROXIMATE)							
PIPE SIZE	A	B	C	D	E	F (APPROXIMATE)	
						MINIMUM	MAXIMUM
3	2½"	1½"	1⅛"	7½"	½"	8¼"	11¾"
4	3	2½"	1⅛"	7½"	½"	10¼"	14
6	3	2½"	1⅛"	7½"	½"	11⅝"	15¼"
8	3	2½"	1⅛"	7½"	½"	13⅜"	16½"
10	3	2½"	1⅛"	7½"	½"	14⅝"	18¼"

ADJUSTABLE U-BOLT PIPE SUPPORT

3 / - **DETAIL**
SCALE: NTS

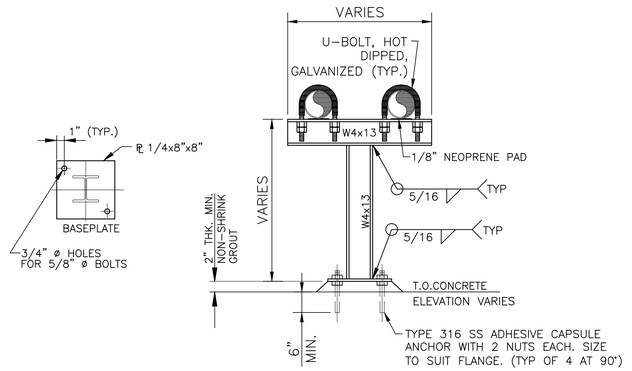

7 / - **DETAIL**
SCALE: NOT TO SCALE

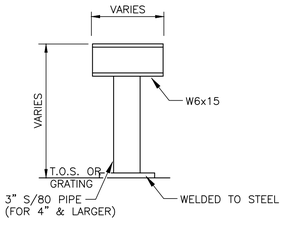

8 / - **DETAIL**
SCALE: NOT TO SCALE

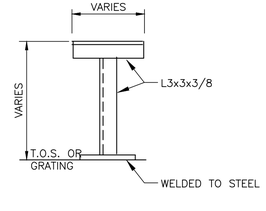

9 / - **DETAIL**
SCALE: NOT TO SCALE

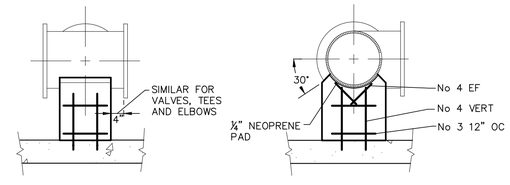

CONCRETE BASE SUPPORT

4 / - **DETAIL**
SCALE: NOT TO SCALE

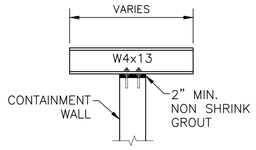

10 / - **DETAIL**
SCALE: NOT TO SCALE

PIPE SUPPORT NOTES:

1. UNDER VALVES, METERS OR OTHER SPECIAL APPURTENANCES, A FABRICATED SUPPORT PIECE MAY BE UTILIZED AS ACCEPTABLE TO ENGINEER.
2. FOR ADDITIONAL REQUIREMENTS SEE SPECIFICATIONS FOR PIPE SUPPORTS.
3. PIPE SUPPORT FOUNDATION FOR PIPING IN EARTHEN CONTAINMENT AREA SHALL BE SIMILAR TO CATWALK SUPPORTS FOUNDATION, SEE SHEET SB-10, SECTION A.
4. PIPE SUPPORTS SHOWN ARE TYPICAL. CONTRACTOR SHALL SUBMIT PIPE SUPPORT DETAILS AND PLAN FOR PIPING ON AND OFF CONTAINMENT.
5. 1/4" NEOPRENE PAD SHALL BE PROVIDED UNDER PIPING AT PIPE SUPPORTS.

A AS-BUILT REVISIONS NOT PROVIDED FOR THIS SHEET BY THE CONTRACTOR.

THIS DOCUMENT ORIGINALLY ISSUED AND SEALED BY LISBETH HABANS NAGRATH, LICENCE No. 36792 ON 2-6-15. THIS DOCUMENT SHOULD NOT BE CONSIDERED A CERTIFIED DOCUMENT.

Trigon
Quality ▲ Commitment ▲ Client Service

TRIGON DWG. NO. MZ-02

TRIGON ASSOCIATES, LLC
1515 POYDRAS STREET
SUITE 2200
NEW ORLEANS, LA 70112
TEL: 504-585-5767
trigonassociates.com

REV.	DATE	DESCRIPTION	BY
A	10-25-19	AS-BUILT MARKUPS	LHN

SEWERAGE AND WATER BOARD OF NEW ORLEANS

CONTRACT No. 1369

HMGP EMERGENCY FUEL STORAGE RETROFIT POWER PLANT
MAIN WATER PURIFICATION PLANT POWER COMPLEX

MECHANICAL DETAILS

DR: SJ CLARK
CK: GA KOLENOVSKY
AP: LH NAGRATH
LAST EDIT:
SCALE: AS NOTED
DATE: JANUARY 28, 2015

GENERAL SUPERINTENDENT

DWG. No. 12098-W8

SET NO:
SHEET NO: 42 OF 72

ABBREVIATIONS

A	AMPS
AFF	ABOVE FINISHED FLOOR
AIC	AMPERE INTERRUPTING CAPACITY
BLDG	BUILDING
C	CONDUIT
CO	CONDUIT ONLY
CKT	CIRCUIT
CPB	CONTROL PULL BOX
CTB	CONTROL TERMINAL BLOCK
DBC	DEAD BREAK CONNECTOR ELBOW
DISC SW	DISCONNECT SWITCH
C (E)	EMPTY CONDUIT
EMT	ELECTRICAL METAL TUBING
EPM	ELECTRONIC POWER METER
EW	EACH WAY
EWC	ELECTRIC WATER COOLER
F	FUSE, FUSIBLE
FACP	FIRE ALARM CONTROL PANEL
FCI	FAULT CIRCUIT INDICATOR
FL	FLOOR
GFI	GROUND FAULT INTERRUPTOR
GFS	GROUND FAULT SENSOR
GND	GROUND
HP	HORSEPOWER
KW	KILOWATT
KVA	KILOVOLTAMPERES
LBC	LOAD BREAK CONNECTOR ELBOW
LC	LIGHTING CONTACTOR
LRFI	LOAD BREAK ROTATABLE FEED THRU INSERT
MCB	MAIN CIRCUIT BREAKER
MH or M/H	MANHOLE
MLO	MAIN LUGS ONLY
MOVE	METAL OXIDE VARISTOR ELBOW
MT	MOUNT
MTD	MOUNTED
MTR	MOTOR
NF	NON-FUSED
NTS	NOT TO SCALE
PC	PHOTOCELL
PPB	POWER PULL BOX
PTB	POWER TERMINAL BLOCK
PVC	POLYVINYL CHLORIDE
REC, RECPT	RECEPTACLE
RGS	RIGID GALVANIZED STEEL
SBJ	SYSTEM BONDING JUMPER
SSBJ	SUPPLY SIDE BONDING JUMPER
SC	SECTIONALIZING CABINET
TTB	TELEPHONE TERMINAL BOARD
TYP	TYPICAL
UG	UNDERGROUND
UON	UNLESS OTHERWISE NOTED
VFI	VACUUM FAULT INTERRUPTER
WP	WEATHERPROOF

COLOR CODE ABBREVIATIONS

BK	BLACK
W	WHITE
R	RED
G	GREEN
O	ORANGE
BU	BLUE
A	AMBER
Y	YELLOW
R BK	RED BASE W/BLACK TRACER (TYP)

PLAN DRAWING SYMBOLS

- XX-XXX — CONDUIT OR CABLE TAG (SEE CONDUIT SCHEDULE)
- CONDUIT RUN ABOVE GROUND
- CONDUIT RUN UNDERGROUND
- CONDUIT TURNING UP OR TOWARDS
- CONDUIT TURNING DOWN OR AWAY
- G — COPPER GROUND WIRE
- LIGHTING AND RECEPTACLE PANELBOARD
- DISTRIBUTION PANELBOARD
- LA-1,3 — HOMERUN TO PANELBOARD "LA" SMALL CROSSMARKS INDICATE HOT WIRE, LARGE CROSSMARK INDICATES NEUTRAL. GROUND WIRE NOT SHOWN BUT SHALL BE INCLUDED IN ALL CIRCUITS. WIRING #12 IN 3/4"C. UNLESS INDICATED OTHERWISE.
- DISCONNECT SWITCH
- MOTOR STARTER
- COMBINATION MOTOR STARTER
- THERMAL OVERLOAD SWITCH
- SINGLE POLE SWITCH – 20A, 120/277V, MTD. 48" AFF.
- SINGLE POLE DIMMING SWITCH
- 3 WAY SWITCH – 20A, 120/277V, MTD. 48" AFF.
- KEYLOCK LIGHT SWITCH, MTD. 48" AFF.
- JUNCTION BOX – USE RAISED COVER & BLANK PANEL IN FINISHED AREAS
- GFI — RECEPTACLE WITH GROUND FAULT INTERRUPTER
- RECEPTACLE – DUPLEX, 20A, 1ø, 120V, 3 POLES, GROUNDED
- RECEPTACLE LOCATED ABOVE COUNTER
- WP — WEATHERPROOF RECEPTACLE
- RECEPTACLE CONNECTED TO EMERGENCY POWER
- RECEPTACLE – FOURPLEX, 20A, 1ø, 120V, GROUNDED
- RECEPTACLE – 208V, 1ø, GROUNDED
- RECEPTACLE – 208V, 3ø, GROUNDED
- RECEPTACLE – 240V, 1ø, GROUNDED
- ELECTRIC MOTOR
- GROUND ROD
- GROUND TEST WELL
- MH — MANHOLE
- X — ELECTRICAL NOTE DESIGNATION TAG (SPECIFIC TO EACH SHEET)

ANSI DEVICE NUMBERS

27	UNDERVOLTAGE RELAY
32	DIRECTIONAL POWER RELAY
60	VOLTAGE BALANCE RELAY
63	SUDDEN PRESSURE RELAY
67	AC DIRECTIONAL OVERCURRENT RELAY
86	LOCK OUT RELAY

ONE LINE SYMBOLS

- HORN GAP SWITCH
- POWER CIRCUIT AND EQUIPMENT
- FUTURE
- EXISTING
- POLE MOUNTED FUSED DISCONNECT SWITCH
- DISCONNECT SWITCH
- FUSED DISCONNECT SWITCH
- AIR BREAK LOAD INTERRUPTER SWITCH
- DRAWOUT FUSE SWITCH
- FUSE * INDICATES RATING AMPERES (* 100A)
- DRAWOUT VACUUM BREAKER
- DRAWOUT AIR BREAKER
- CURRENT LIMITING BREAKER
- 200/5 / 3 — CURRENT TRANSFORMER INDICATES RATIO AND NUMBER
- POTENTIAL TRANSFORMER
- GROUND
- RISER POLE LIGHTNING ARRESTOR
- MOVE SURGE ARRESTOR ELBOW
- SURGE CAPACITOR & LIGHTNING ARRESTOR
- 3 POSITION (GROUND, OPEN, CLOSED) LOAD INTERRUPTER SWITCH
- 3 POSITION (GROUND, OPEN, CLOSED) LOAD INTERRUPTER SWITCH WITH OVERCURRENT CONTROL
- STRESS CONE
- BUS DUCT
- DRAWOUT CONTACTOR (ATS)
- B SOURCE / A SOURCE / COIL — FOUR POSITION SWITCH (LOOP FEED) "T-BLADE"
  AB – CLOSE TO COIL
  B – COIL
  A – COIL
  AB – OPEN TO COIL

LIGHTING SYMBOLS

- 2x4 FLUORESCENT LIGHTING FIXTURE
- 2x2 FLUORESCENT LIGHTING FIXTURE
- 1x4 FLUORESCENT LIGHTING FIXTURE
- WALL MOUNTED FLUORESCENT LIGHTING FIXTURE
- FLOURESCENT STRIP LIGHT
- SURFACE MOUNTED INCANDESCENT/H.I.D. FIXTURE
- WALL MOUNTED H.I.D. FIXTURE
- WALL MOUNTED SELF-CONTAINED EMERGENCY LIGHTS
- EXIT LIGHT

TELEPHONE/COMMUNICATIONS SYMBOLS

- TELEPHONE OUTLET 1-GANG J.B. W/ 3/4" C (E) STUBBED UP ABOVE CEILING W/ PULL STRING
- COMBINATION TEL./DATA OUTLET 1-GANG J.B. W/ 3/4" C (E) STUBBED UP ABOVE CEILING W/ PULL STRING
- DATA OUTLET 1-GANG J.B. W/ 3/4" C (E) STUBBED UP ABOVE CEILING

GENERAL NOTES: (PERTAINS TO ALL SHEETS)

1. CONTRACTOR SHALL INSURE THAT ALL ELECTRICAL WORK SHALL COMPLY WITH THE MINIMUM REQUIREMENTS OF THE 2011 NATIONAL ELECTRICAL CODE (NEC) AND ANY LOCAL, STATE AND FEDERAL CODES AND/OR RESTRICTIONS.
2. THE INTENT OF THESE DRAWINGS IS TO DEFINE THE CONCEPTUAL SCOPE OF WORK. IT IS THE CONTRACTOR'S RESPONSIBILITY TO SUPPLY ALL NECESSARY MATERIAL AND LABOR TO FURNISH A COMPLETE AND OPERABLE ELECTRICAL SYSTEM.
3. THE CONTRACTOR IS RESPONSIBLE FOR PAYING ALL TAXES AND LICENSES AS A RESULT OF HIS WORK.
4. THE CONTRACTOR SHALL BE RESPONSIBLE FOR OR REPLACE/REPAIR AT HIS OWN EXPENSE ANY AND ALL CONSTRUCTION THAT IS DAMAGED BY HIS WORK TO MATCH EXISTING. THIS NEW REPAIR OR REPLACEMENT WORK SHALL BE DONE TO THE OWNER'S SATISFACTION, OR THE OWNER SHALL HAVE THE RIGHT TO REPAIR OR REPLACE ON HIS OWN AT THE OWNER'S EXPENSE.
5. A FULL TIME SUPERINTENDENT, EXPERIENCED IN AND SKILLED IN THIS TYPE OF WORK SHALL BE ON THE JOB AT ALL TIMES DURING THE WORK. THE SUPERINTENDENT SHALL REPRESENT THE CONTRACTOR IN HIS ABSENCE AND ALL DIRECTIONS GIVEN TO HIM SHALL BE AS BINDING AS IF GIVEN DIRECTLY TO THE CONTRACTOR.
6. HAZARDOUS OR FLAMMABLE MATERIALS SHALL NOT BE STORED AT THE JOB SITE AT ANY TIME.
7. THE CONTRACTOR SHALL RELOCATE ANY ELECTRICAL OR MECHANICAL DEVICES THAT ARE IN CONFLICT WITH THE NEW WORK AS A PART OF THIS CONTRACT. CONTRACTOR SHALL CONSULT WITH THE CONTRACTING OFFICER'S REPRESENTATIVE FOR EXACT LOCATION OF RELOCATED DEVICES.
8. GROUNDING SHALL BE IN ACCORDANCE WITH THE NATIONAL ELECTRICAL CODE (NEC). CONTRACTOR SHALL INSTALL A PROPERLY SIZED GROUND WIRE IN EVERY CONDUIT RUN.
9. ALL ABOVE GROUND CONDUIT AND FITTINGS SHALL BE RIGID ALUM.
10. ALL MATERIALS AND TESTING OF ELECTRICAL EQUIPMENT SHALL CONFORM TO THE LATEST PUBLISHED STANDARDS OF THE IEEE, NEMA, ANSI AND ASTM CODES WHERE APPLICABLE.
11. WHERE TWO OR MORE REGULATIONS OR CODES ARE APPLICABLE, THE MOST STRINGENT SHALL APPLY.
12. ALL ELECTRICAL MATERIAL AND EQUIPMENT SHALL BE LISTED OR LABELED UL (UNDERWRITERS LABORATORIES), FM (FACTORY MUTUAL), OR EQUIVALENT TESTING LABORATORY, FOR THE SERVICE IN WHICH IT IS USED, AND SHALL BEAR THEIR LABEL OR LISTING.
13. BREATHERS AND DRAINS SHALL BE PROVIDED AT HIGH AND LOW POINTS OF THE CONDUIT SYSTEM TO PREVENT THE ACCUMULATION OF CONDENSED WATER.
14. CONTRACTOR SHALL FIELD ROUTE AND SUPPORT CONDUITS FROM NEW & EXISTING RACKS OR STRUCTURES.
15. ALL MATERIAL & DEVICES SHALL BE INSTALLED PER MANUFACTURER'S RECOMMENDATIONS.
16. ALL REQUIRED DIMENSIONS SHALL BE VERIFIED AT THE JOB SITE BEFORE INSTALLATION OF EQUIPMENT.
17. ALL ITEMS ARE TO BE PROVIDED AS NEW UNDER THIS CONTRACT UNLESS ITEM IS MARKED "EXISTING".
18. ALL ELECTRICAL SHALL BE PERFORMED BY A LICENSED ELECTRICAL CONTRACTOR.
19. USE OXIDATION INHIBITING COMPOUND ON ALL CONDUCTOR TERMINATIONS INSIDE SERVICE EQUIPMENT, DISCONNECT SWITCHES, FUSE HOLDERS AND ON FUSE FERRULES, TERMINAL BOXES, ELECTRICAL PANELS, CONTROL PANELS AND GROUNDING CONNECTIONS. CONTROL WIRING SIZES #12 AND SMALLER INSIDE CONTROL PANELS IS EXEMPT FROM REQUIREMENT.
20. OBTAIN A CITY OF NEW ORLEANS PERMIT AND ELECTRICAL INSPECTION.

SHEET NUMBERING SYSTEM

SEQUENTIAL SHEET NUMBER

DISCIPLINE
- G-GENERAL
- C-CIVIL
- S-STRUCTURAL
- M-MECHANICAL
- E-ELECTRICAL
- I-INSTRUMENTATION

EZ-01

DENOTES AREA OR STANDARD DETAIL SHEETS
- A – GENERAL DISCIPLINE SHEETS
- B – EMERGENCY FUEL STORAGE TANK AREA
- C – DAY TANK / BOILER ROOM BASEMENT AREA
- Z – STANDARD DETAIL SHEETS

DEPICTED IS STANDARD ELECTRICAL DETAIL SHEET NO. 1

A — AS-BUILT REVISIONS NOT PROVIDED FOR THIS SHEET BY THE CONTRACTOR

THIS DOCUMENT ORIGINALLY ISSUED AND SEALED BY HENRY G. HAWNEY, LICENCE No. 19229 ON 2-6-15.

E

Trigon — Quality ▲ Commitment ▲ Client Service

TRIGON DWG. NO. EA-01

TRIGON ASSOCIATES, LLC
1515 POYDRAS STREET
SUITE 2200
NEW ORLEANS, LA 70112
TEL: 504-585-5767
trigonassociates.com

REV.	DATE	AS-BUILT MARKUPS	BY
A	10-25-19	AS-BUILT MARKUPS	LHN

SEWERAGE AND WATER BOARD OF NEW ORLEANS

CONTRACT No. 1369

HMGP EMERGENCY FUEL STORAGE
RETROFIT POWER PLANT
MAIN WATER PURIFICATION PLANT POWER COMPLEX

ELECTRICAL NOTES & SYMBOLS SCHEDULES

DR: S. CLARK
CK: H. HAWNEY
AP: H. HAWNEY
LAST EDIT:
SCALE: NOT TO SCALE
DATE: JANUARY 28, 2015

GENERAL SUPERINTENDENT

DWG. No. 12098-W8

SET NO:

SHEET NO: 43 OF 72

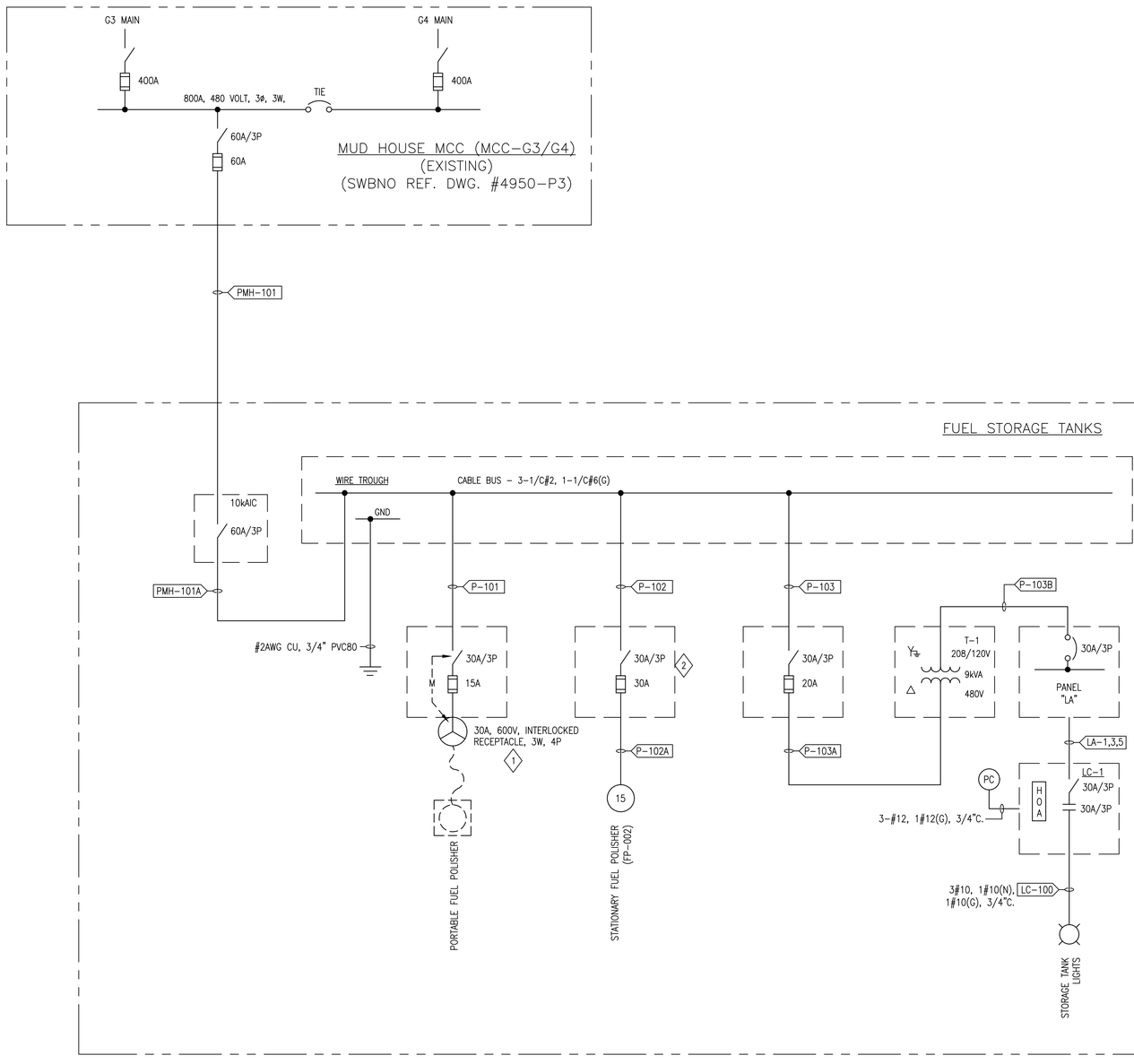

FUEL STORAGE TANKS ONE LINE DIAGRAM

A – DIAGRAM

NTS

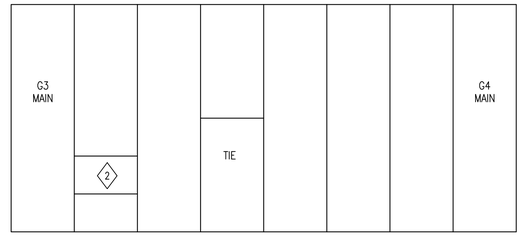

MUD HOUSE MCC-G3/G4 FRONT ELEVATION 1

NOTES:

1. MCC G3/G4 IS GE 800 LINE, CAT#605X0120L01.
2. 60A, 600V, 3P, SPARE SWITCH IS EXISTING. FUSE WITH 60A CLASS R FUSES & USE AS "OIL STORAGE TANKS FEEDER". RE-LABEL MCC DOOR.

NOTES:

1. 30A, 600V, 3P, 4W, INTERLOCKED RECEPTACLE, HP RATED (7½HP), NEMA 4X 304SS, FUSED, VIEWING WINDOW, CROUSE HINDS WSRDW3352 SM S901, WITH MATING 3W, 4P PLUG, CROUSE HINDS APJ3485 OR EQUAL.
2. VERIFY SIZE AND FUSING WITH STATIONARY POLISHER MANUFACTURER.

A AS-BUILT REVISIONS NOT PROVIDED FOR THIS SHEET BY THE CONTRACTOR

THIS DOCUMENT ORIGINALLY ISSUED AND SEALED BY HENRY G. HAWNEY, LICENCE No. 19229 ON 2-6-15.

REV.	DATE		BY
A	10-25-19	AS-BUILT MARKUPS	LHN

SEWERAGE AND WATER BOARD OF NEW ORLEANS

CONTRACT No. 1369

HMGP EMERGENCY FUEL STORAGE
RETROFIT POWER PLANT
MAIN WATER PURIFICATION PLANT POWER COMPLEX

FUEL STORAGE TANKS
ONE LINE DIAGRAM

DR:	S. CLARK
CK:	H. HAWNEY
AP:	H. HAWNEY
LAST EDIT:	
SCALE:	NOT TO SCALE
DATE:	JANUARY 28, 2015

GENERAL SUPERINTENDENT

DWG. No. 12098-W8

SET NO: SHEET NO: 44 OF 72

E

Trigon
Quality ▲ Commitment ▲ Client Service

TRIGON DWG. NO. EA-02

TRIGON ASSOCIATES, LLC
1515 POYDRAS STREET
SUITE 2200
NEW ORLEANS, LA 70112
TEL: 504-585-5767

trigonassociates.com

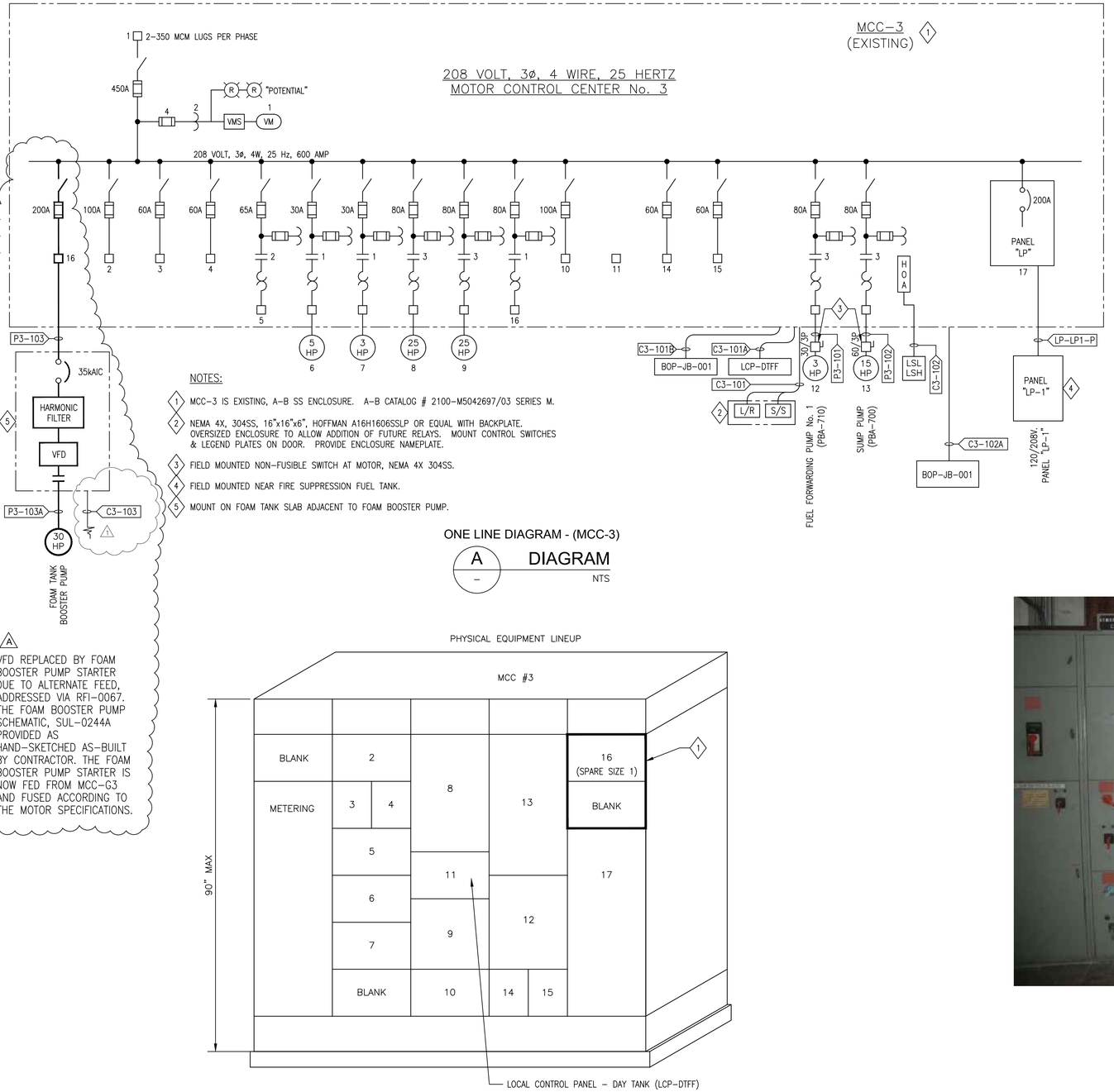

NOTES:

1. MCC–3 IS EXISTING, A–B SS ENCLOSURE. A–B CATALOG # 2100–M5042697/03 SERIES M.
2. NEMA 4X, 304SS, 16"x16"x6", HOFFMAN A16H1606SSLP OR EQUAL WITH BACKPLATE. OVERSIZED ENCLOSURE TO ALLOW ADDITION OF FUTURE RELAYS. MOUNT CONTROL SWITCHES & LEGEND PLATES ON DOOR. PROVIDE ENCLOSURE NAMEPLATE.
3. FIELD MOUNTED NON–FUSIBLE SWITCH AT MOTOR, NEMA 4X 304SS.
4. FIELD MOUNTED NEAR FIRE SUPPRESSION FUEL TANK.
5. MOUNT ON FOAM TANK SLAB ADJACENT TO FOAM BOOSTER PUMP.

ONE LINE DIAGRAM - (MCC-3)

A – DIAGRAM, NTS

A. VFD REPLACED BY FOAM BOOSTER PUMP STARTER DUE TO ALTERNATE FEED, ADDRESSED VIA RFI–0067. THE FOAM BOOSTER PUMP SCHEMATIC, SUL–0244A PROVIDED AS HAND–SKETCHED AS–BUILT BY CONTRACTOR. THE FOAM BOOSTER PUMP STARTER IS NOW FED FROM MCC–G3 AND FUSED ACCORDING TO THE MOTOR SPECIFICATIONS.

MCC-3

1 – ELEVATION, SCALE: 3/4"=1'–0"

NOTES:

1. REMOVE SPARE SIZE 1 & BLANK DOOR. INSTALL MCC BUCKET WITH 200AMP/3P FUSED SWITCH. FUSE WITH 200AMP CLASS R FUSES. OBTAIN SERVICES OF AB FIELD ENGINEER TO MAKE ALL MCC MODIFICATIONS.

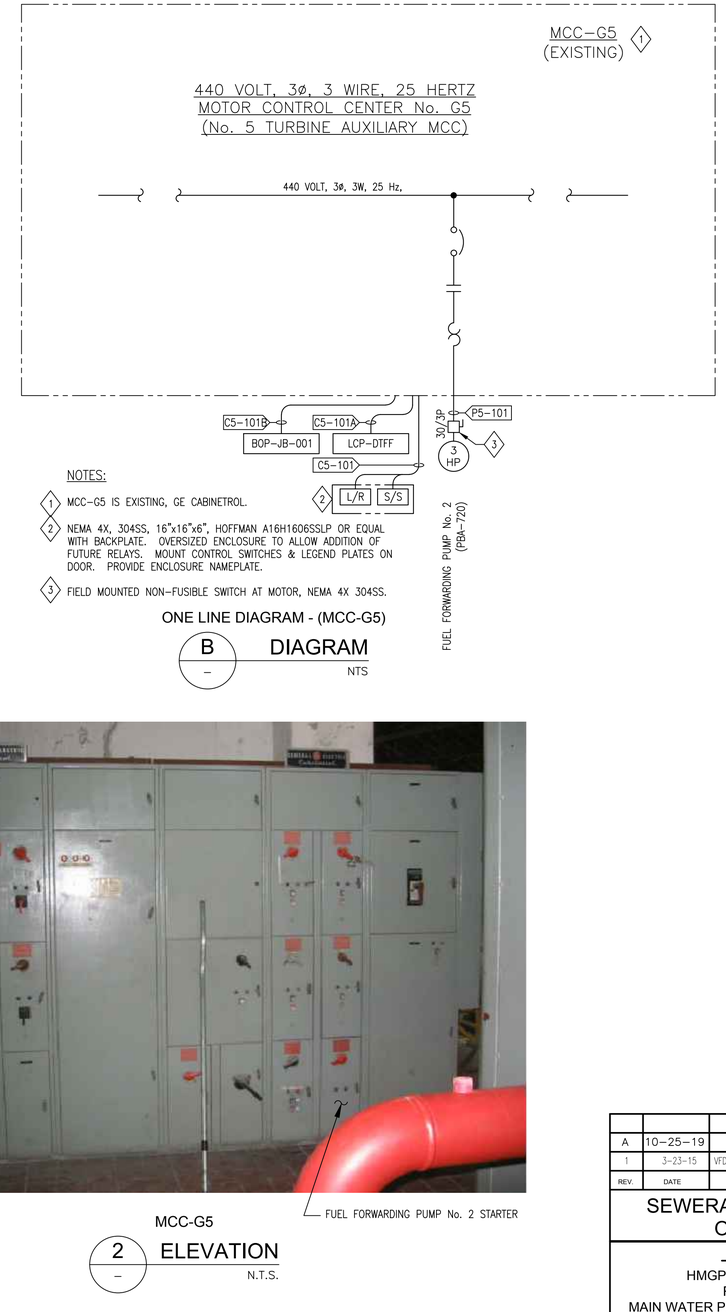

NOTES:

1. MCC–G5 IS EXISTING, GE CABINETROL.
2. NEMA 4X, 304SS, 16"x16"x6", HOFFMAN A16H1606SSLP OR EQUAL WITH BACKPLATE. OVERSIZED ENCLOSURE TO ALLOW ADDITION OF FUTURE RELAYS. MOUNT CONTROL SWITCHES & LEGEND PLATES ON DOOR. PROVIDE ENCLOSURE NAMEPLATE.
3. FIELD MOUNTED NON–FUSIBLE SWITCH AT MOTOR, NEMA 4X 304SS.

ONE LINE DIAGRAM - (MCC-G5)

B – DIAGRAM, NTS

MCC-G5

2 – ELEVATION, N.T.S.

REV.	DATE		BY
A	10–25–19	AS–BUILT MARKUPS	LHN
1	3–23–15	VFD SPACE HEATER REVISION, DIAGRAM "A" (ADD.3)	HGH

SEWERAGE AND WATER BOARD OF NEW ORLEANS

CONTRACT No. 1369

HMGP EMERGENCY FUEL STORAGE
RETROFIT POWER PLANT
MAIN WATER PURIFICATION PLANT POWER COMPLEX

MCC-3 & G5 ONE LINE DIAGRAMS & EQUIPMENT LAYOUT

THIS DOCUMENT ORIGINALLY ISSUED AND SEALED BY HENRY G. HAWNEY, LICENCE No. 19229 ON 2-6-15.

E

Trigon — Quality ▲ Commitment ▲ Client Service

TRIGON DWG. NO. EA-03

TRIGON ASSOCIATES, LLC
1515 POYDRAS STREET
SUITE 2200
NEW ORLEANS, LA 70112
TEL: 504-585-5767
trigonassociates.com

DR.	S. CLARK
CK:	H. HAWNEY
AP:	H. HAWNEY
LAST EDIT:	
SCALE:	NOT TO SCALE
DATE:	JANUARY 28, 2015

GENERAL SUPERINTENDENT

DWG. No. 12098-W8

SET NO: SHEET NO: 45 OF 72

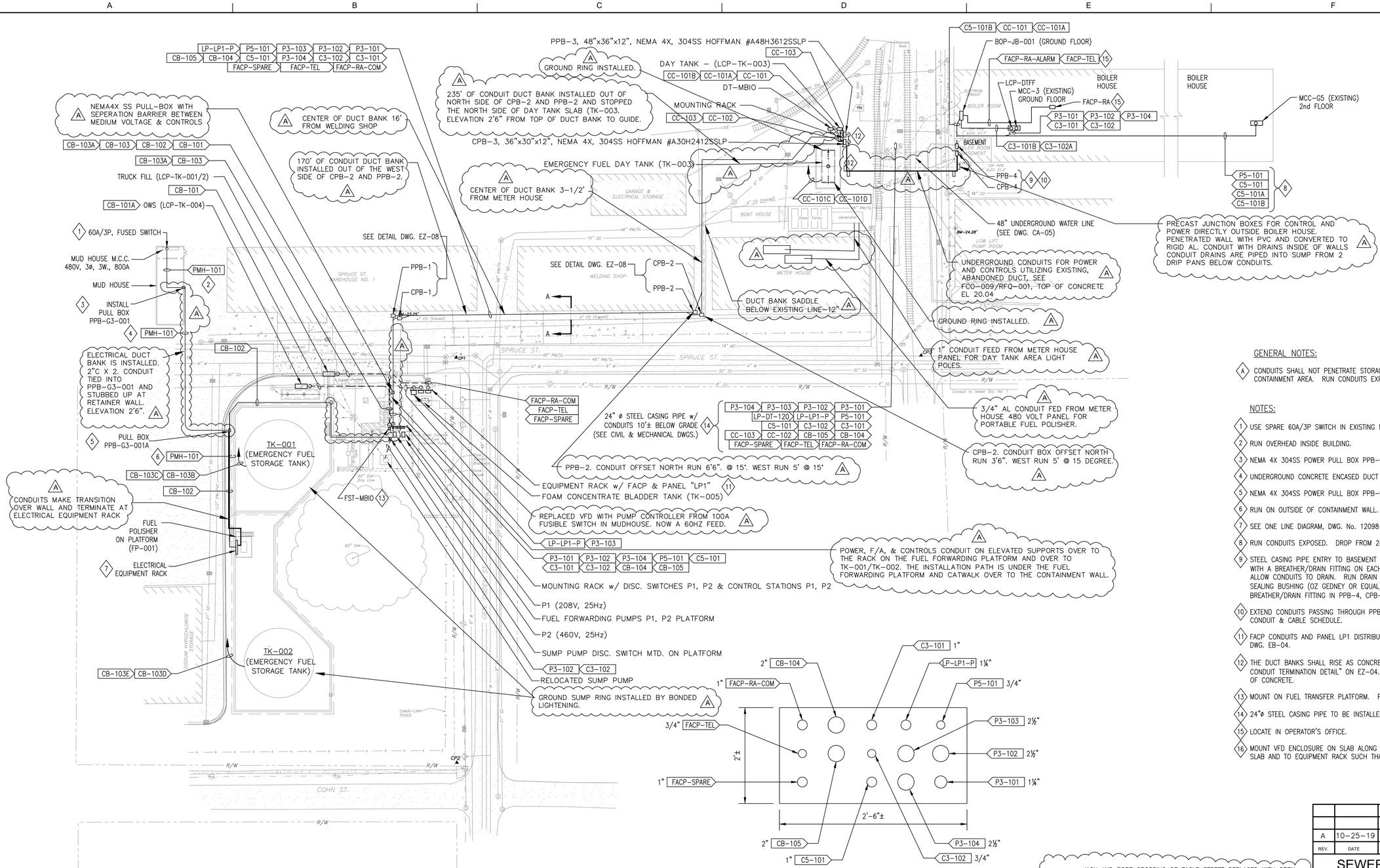

DUCT BANK - SECTION A-A

N.T.S.

(INSTALL PER DETAILS ON DWG. EZ-04)

1 OVERALL ELECTRICAL PLAN

SCALE: 1"=40'

GENERAL NOTES:

A CONDUITS SHALL NOT PENETRATE STORAGE TANK FLOOR INSIDE CONTAINMENT AREA. RUN CONDUITS EXPOSED ALONG CONTAINMENT WALLS.

NOTES:

1. USE SPARE 60A/3P SWITCH IN EXISTING MCC-G3.
2. RUN OVERHEAD INSIDE BUILDING.
3. NEMA 4X 304SS POWER PULL BOX PPB-G3-001.
4. UNDERGROUND CONCRETE ENCASED DUCT BANK WITH REBAR.
5. NEMA 4X 304SS POWER PULL BOX PPB-G3-001A. RISE OUTSIDE CONTAINMENT WALL.
6. RUN ON OUTSIDE OF CONTAINMENT WALL.
7. SEE ONE LINE DIAGRAM, DWG. No. 12098-W8-EA-02.
8. RUN CONDUITS EXPOSED. DROP FROM 2nd FLOOR TO BASEMENT. RUN IN BASEMENT.
9. STEEL CASING PIPE ENTRY TO BASEMENT SHALL BE WATERPROOF. PROVIDE A TEE-FITTING WITH A BREATHER/DRAIN FITTING ON EACH CONDUIT PRIOR TO ENTRY TO PPB-4, CPB-4 TO ALLOW CONDUITS TO DRAIN. RUN DRAIN TO SUMP IN BASEMENT. SEAL ALL CONDUITS WITH SEALING BUSHING (OZ GEDNEY OR EQUAL) WHERE CONDUITS ENTER PPB-4, CPB-4. PROVIDE BREATHER/DRAIN FITTING IN PPB-4, CPB-4.
10. EXTEND CONDUITS PASSING THROUGH PPB-4, CPB-4 AS CALLED FOR ON SCHEMATICS AND ON CONDUIT & CABLE SCHEDULE.
11. FACP CONDUITS AND PANEL LP1 DISTRIBUTION CIRCUITS ARE NOT SHOWN ON THIS DWG. SEE DWG. EB-04.
12. THE DUCT BANKS SHALL RISE AS CONCRETE ENCASED WITH REBAR PER "ABOVE GROUND CONDUIT TERMINATION DETAIL" ON EZ-04. WELD REBAR TO STEEL PIPE AND COVER WITH 3" OF CONCRETE.
13. MOUNT ON FUEL TRANSFER PLATFORM. PROVIDE EQUIPMENT MOUNTING RACK.
14. 24"ø STEEL CASING PIPE TO BE INSTALLED BY JACK & BORE. SEE DWG. EZ-07.
15. LOCATE IN OPERATOR'S OFFICE.
16. MOUNT VFD ENCLOSURE ON SLAB ALONG WITH FACP & PANEL LP1. SECURE ENCLOSURE TO SLAB AND TO EQUIPMENT RACK SUCH THAT STRUCTURE IS RATED FOR 150MPH WIND LOADING.

A JACK AND BORE CROSSING OF EAGLE STREET REPLACED WITH OPEN CUT/TROUGH INSTALLATION FCO-009/RFQ-001. SEE SUL-0243 FOR CONTRACTOR PROVIDED HAND-DRAWN SKETCHES OF AS-BUILTS. USE OF 60 HZ FEED FROM MUD PUMP ROOM MCC-G3 IN LIEU OF 25 CYCLE WITH VFD FOR FIRE SUPPRESSION SYSTEM EQUIPMENT WAS APPROVED WITH RFI-0067.

REV.	DATE	AS-BUILT MARKUPS	BY
A	10-25-19	AS-BUILT MARKUPS	LHN

THIS DOCUMENT ORIGINALLY ISSUED AND SEALED BY HENRY G. HAWNEY, LICENCE N□. 19229 ON 2-6-15.

E

Trigon
Quality ▲ Commitment ▲ Client Service

TRIGON DWG. NO. EA-04

TRIGON ASSOCIATES, LLC
1515 POYDRAS STREET
SUITE 2200
NEW ORLEANS, LA 70112
TEL: 504-585-5767
trig□nass□□iat□s.□□m

SEWERAGE AND WATER BOARD OF NEW ORLEANS

CONTRACT N□. 1369

HMGP EMERGENCY FUEL STORAGE RETROFIT POWER PLANT
MAIN WATER PURIFICATION PLANT POWER COMPLEX

OVERALL ELECTRICAL PLAN

DR.	S. CLARK
CK:	H. HAWNEY
AP:	H. HAWNEY
LAST EDIT:	
SCALE:	NOT TO SCALE
DATE:	JANUARY 28, 2015

GENERAL SUPERINTENDENT

DWG. N□. 12098-W8

SET NO: SHEET NO: 46 OF 72

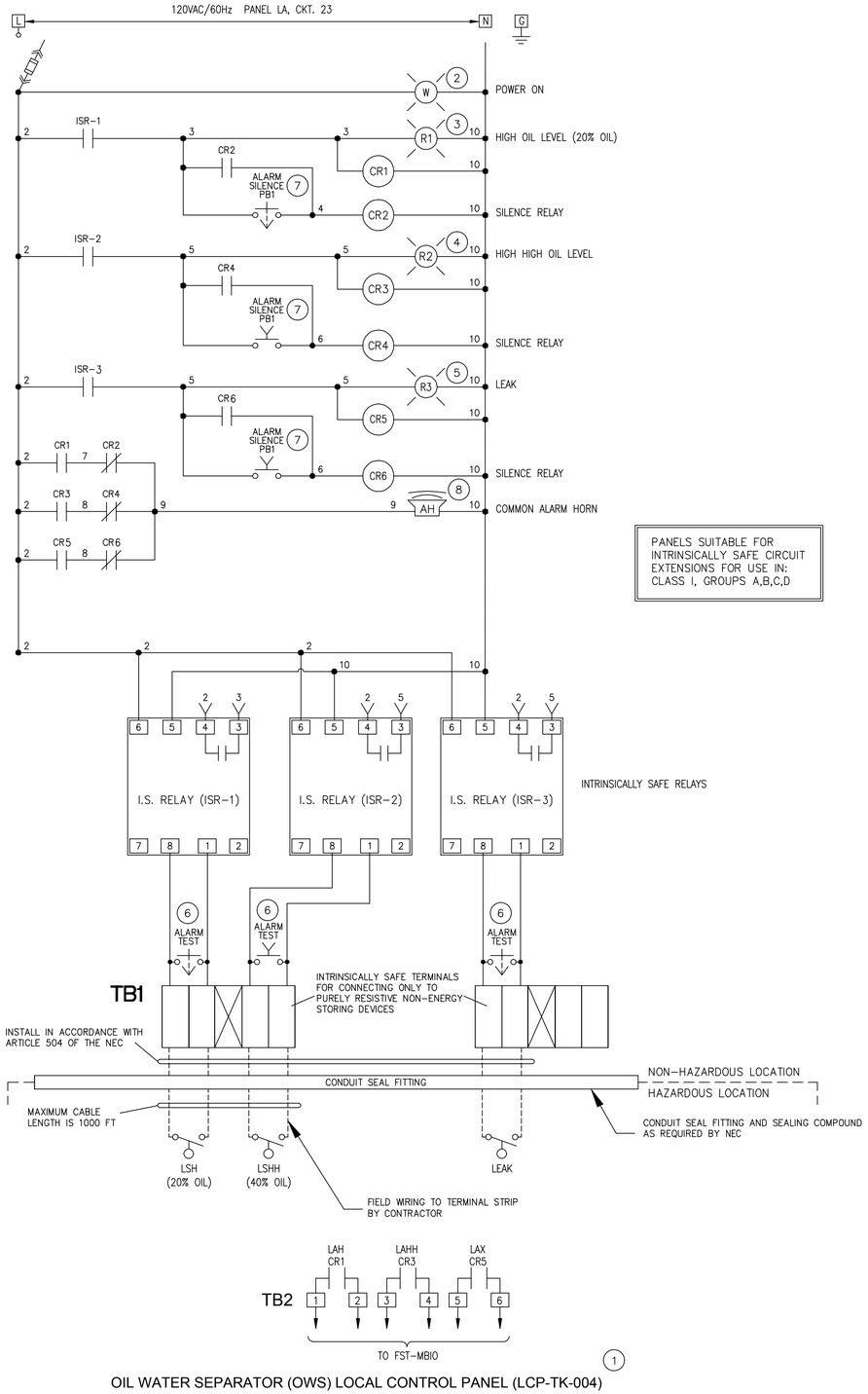

PANELS SUITABLE FOR INTRINSICALLY SAFE CIRCUIT EXTENSIONS FOR USE IN: CLASS I, GROUPS A,B,C,D

OIL WATER SEPARATOR (OWS) LOCAL CONTROL PANEL (LCP-TK-004) (1)

1 SCHEMATIC
– NTS

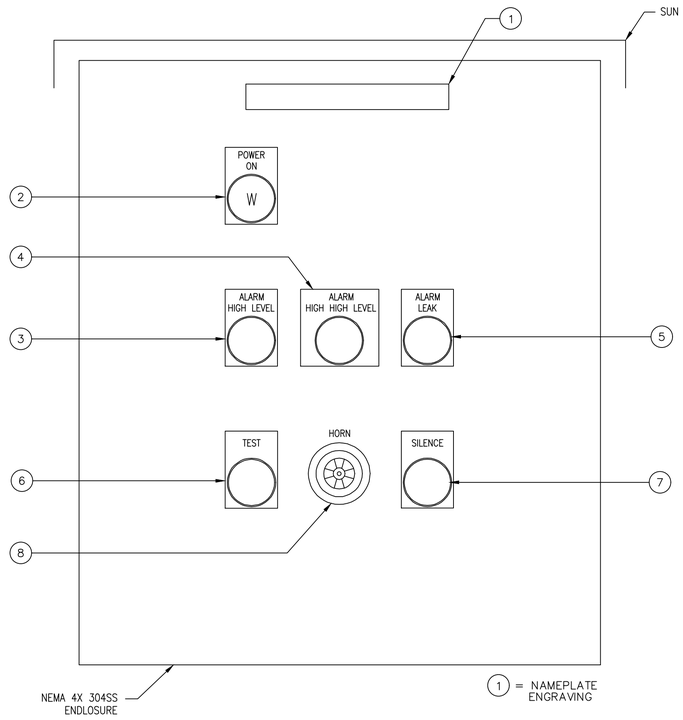

(1) OWS ALARM RELAY PANEL (LCP-TK-004)

A DIAGRAM
– NTS

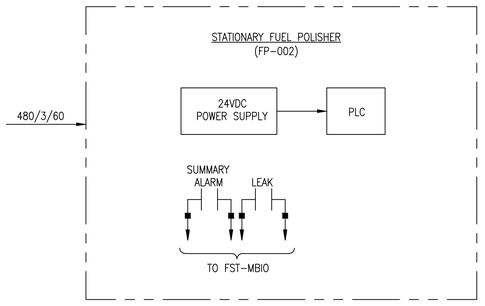

B DIAGRAM
– NTS

GENERAL NOTES:

(A) FOR CONTROL PANEL COMPONENTS, SEE SPECIFICATION SECTION 26 61 00.

(A) CONTROL PANEL AS-BUILTS PROVIDED BY RED GROUP VIA SUL-0244

THIS DOCUMENT ORIGINALLY ISSUED AND SEALED BY HENRY G. HAWNEY, LICENCE No. 19229 ON 2-6-15.

E

Trigon
Quality ▲ Commitment ▲ Client Service

TRIGON DWG. NO. EB-01

TRIGON ASSOCIATES, LLC
1515 POYDRAS STREET
SUITE 2200
NEW ORLEANS, LA 70112
TEL: 504-585-5767
trigonassociates.com

REV.	DATE	AS-BUILT MARKUPS	BY
A	10-25-19	AS-BUILT MARKUPS	LHN

SEWERAGE AND WATER BOARD OF NEW ORLEANS

CONTRACT No. 1369

HMGP EMERGENCY FUEL STORAGE
RETROFIT POWER PLANT
MAIN WATER PURIFICATION PLANT POWER COMPLEX

OIL WATER SEPARATOR SCHEMATIC & LOCAL CONTROL PNL.

DR:	S. CLARK
CK:	H. HAWNEY
AP:	H. HAWNEY
LAST EDIT:	
SCALE:	NOT TO SCALE
DATE:	JANUARY 28, 2015

GENERAL SUPERINTENDENT

DWG. No. 12098-W8

SET NO: SHEET NO: 47 OF 72

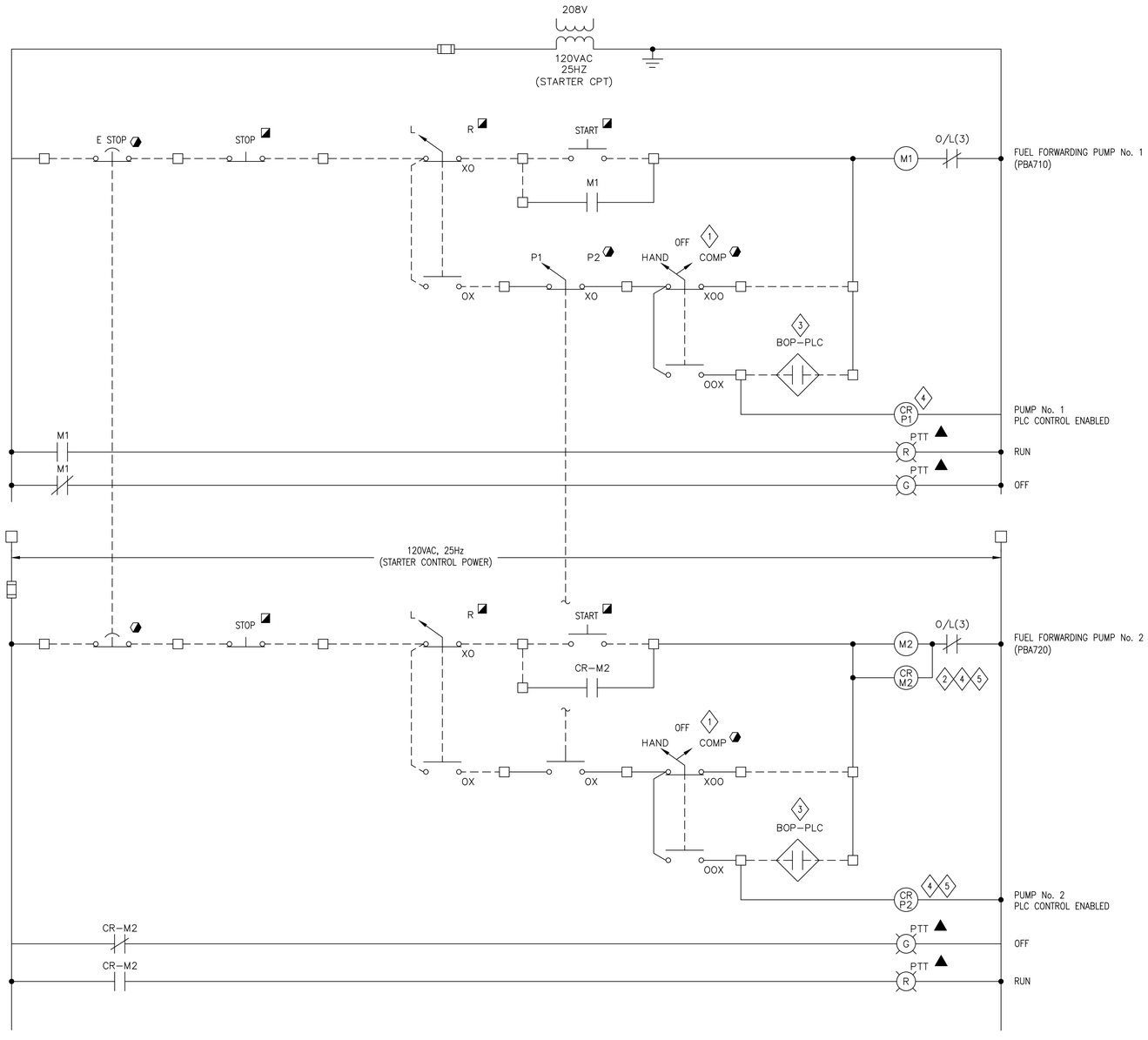

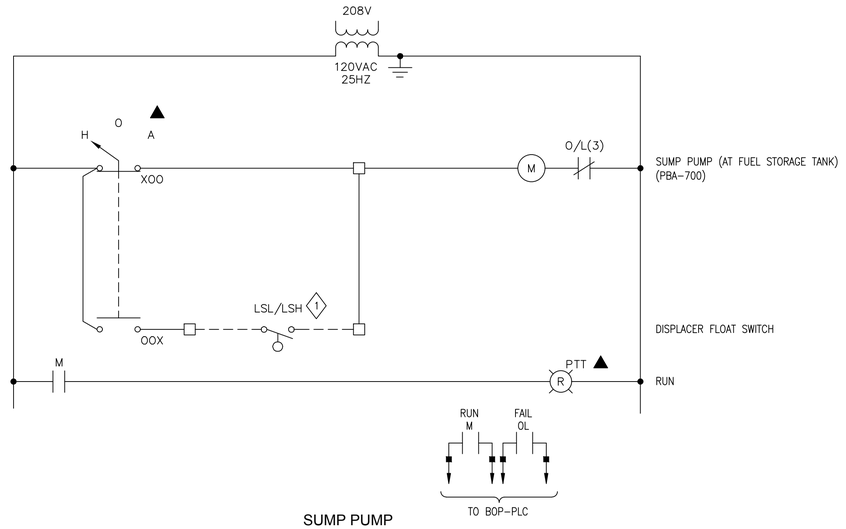

SUMP PUMP

2 – SCHEMATIC

NTS

NOTES:

1. DISPLACER FLOAT SWITCH – HIGH/LOW: EXISTING IN FIELD.

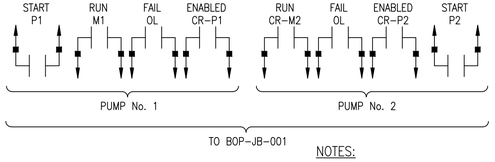

FUEL FORWARDING PUMP No. 1, No. 2

1 – SCHEMATIC

NTS

LEGEND:

- DEVICE LOCATED IN FIELD AT MOTOR
- DEVICE LOCATED AT DIESEL DAY TANK LCP (LCP–DTFF)
- DEVICE LOCATED ON STARTER
- FIELD WIRING
- TERMINAL

NOTES:

1. HAND/OFF/COMPUTER: 3 POSITION SELECTOR SWITCH; SPRING RETURN FROM HAND TO OFF, MAINTAINED POSITIONS – "OFF" & "COMPUTER" ALLEN BRADLEY 800H
2. ADD RELAY CR–M2.
3. PLC OUTPUT: PLC OUTPUT IS MAINTAINED OUTPUT. PLC CONTROL OF FORWARDING PUMPS WILL AUTOMATICALLY START/STOP PUMPS, BASED ON DAY TANK HI/LO LEVELS. REFERENCE PROJECT CP1370 AND BOP–PLC.
4. ALLEN BRADLEY RELAY #700P–401–A22. 220V/60Hz COIL TO OPERATE AT 120V/25Hz.
5. SPACE WITHIN STARTER CUBICLE IS LIMITED. MOUNT RELAYS IN EXTERNAL NEMA 12, 304SS ENCLOSURE. ATTACH LAMECOID LABEL ON ENCLOSURE WITH INSTRUCTIONS ON HOW TO KILL POWER BEFORE OPENING.

A AS–BUILT REVISIONS NOT PROVIDED FOR THIS SHEET BY THE CONTRACTOR

THIS DOCUMENT ORIGINALLY ISSUED AND SEALED BY HENRY G. HAWNEY, LICENCE No. 19229 ON 2-6-15.

E

Trigon
Quality ▲ Commitment ▲ Client Service

TRIGON DWG. NO. EB-02

TRIGON ASSOCIATES, LLC
1515 POYDRAS STREET
SUITE 2200
NEW ORLEANS, LA 70112
TEL: 504-585-5767

trigonassociates.com

REV.	DATE		BY
A	10–25–19	AS–BUILT MARKUPS	LHN
REV.	DATE	AS-BUILT MARKUPS	BY

SEWERAGE AND WATER BOARD OF NEW ORLEANS

CONTRACT No. 1369

HMGP EMERGENCY FUEL STORAGE
RETROFIT POWER PLANT
MAIN WATER PURIFICATION PLANT POWER COMPLEX

FUEL FORWARDING PUMPS & SUMP PUMP SCHEMATICS

DR:	S. CLARK
CK:	H. HAWNEY
AP:	H. HAWNEY
LAST EDIT:	
SCALE:	NOT TO SCALE
DATE:	JANUARY 28, 2015

GENERAL SUPERINTENDENT

DWG. No. 12098-W8

SET NO: SHEET NO: 48 OF 72

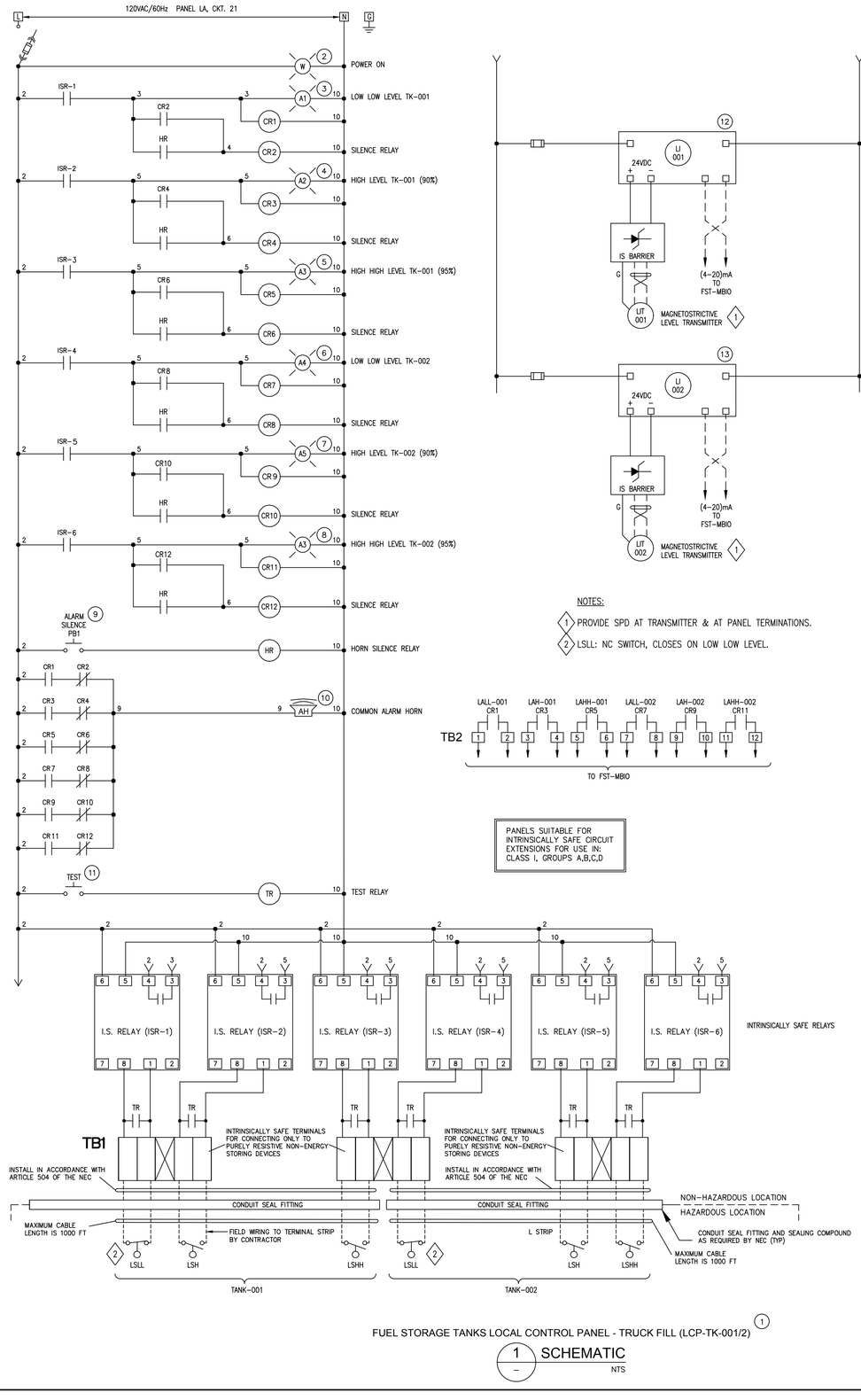

NOTES:

1. PROVIDE SPD AT TRANSMITTER & AT PANEL TERMINATIONS.
2. LSLL: NC SWITCH, CLOSES ON LOW LOW LEVEL.

(1) FUEL STORAGE TANKS LOCAL CONTROL PANEL - TRUCK FILL (LCP-TK-001/2)

(1) SCHEMATIC — NTS

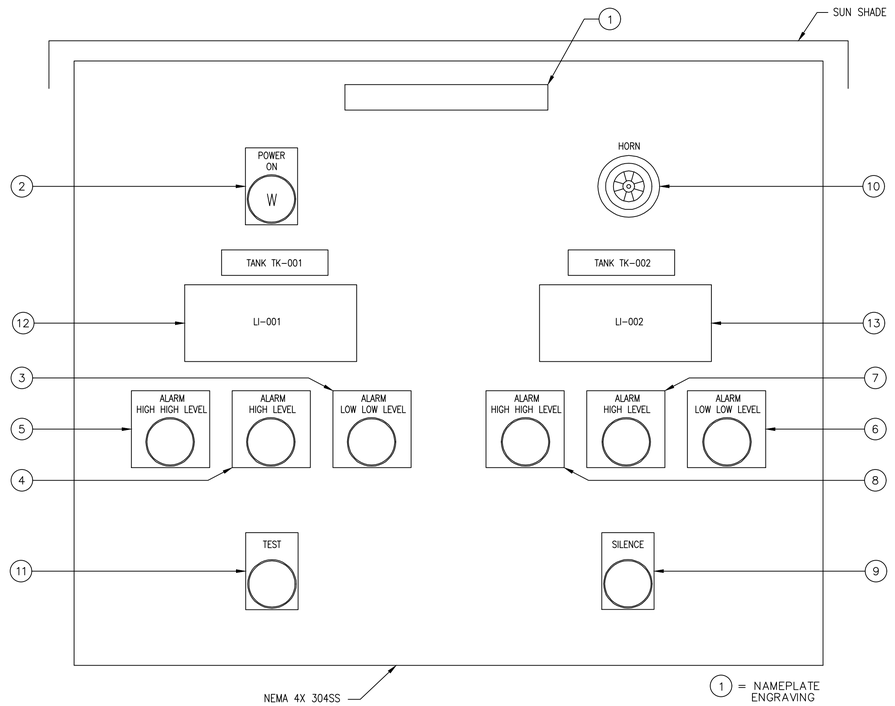

(1) FUEL STORAGE TANKS LOCAL CONTROL PANEL - TRUCK FILL (LCP-TK-001/2)

A — DIAGRAM — NTS

GENERAL NOTES:

A. FOR CONTROL PANEL COMPONENTS, SEE SPECIFICATION SECTION 26,6100.

REV.	DATE		BY
A	10-25-19	AS-BUILT MARKUPS	LHN

SEWERAGE AND WATER BOARD OF NEW ORLEANS

CONTRACT No. 1369

HMGP EMERGENCY FUEL STORAGE
RETROFIT POWER PLANT
MAIN WATER PURIFICATION PLANT POWER COMPLEX

FUEL STORAGE TANKS SCHEMATIC

A CONTROL PANEL AS-BUILTS PROVIDED BY RED GROUP VIA SUL-0244

THIS DOCUMENT ORIGINALLY ISSUED AND SEALED BY HENRY G. HAWNEY, LICENCE No. 19229 ON 2-6-15.

TRIGON ASSOCIATES, LLC
1515 POYDRAS STREET
SUITE 2200
NEW ORLEANS, LA 70112
TEL: 504-585-5767
trigonassociates.com

Trigon — Quality ▲ Commitment ▲ Client Service

TRIGON DWG. NO. EB-03

DR:	S. CLARK
CK:	H. HAWNEY
AP:	H. HAWNEY
LAST EDIT:	
SCALE:	NOT TO SCALE
DATE:	JANUARY 28, 2015

GENERAL SUPERINTENDENT

DWG. No. 12098-W8

SET NO: SHEET NO: 49 OF 72

SYMBOL LEGEND

- ⬡ — UVIR-XXX : ULTRAVIOLET/INFRARED DETECTOR; TAG NO. "XXX"
- AMM-XXX — AMM-XXX : ADDRESSABLE MONITOR MODULE; TAG NO. "XXX"
- RRM-XXX — RRM-XXX : REMOTE RELEASING MODULE; TAG NO. "XXX"
- FACP — FACP : FIRE ALARM CONTROL PANEL
- S◀ — STROBE
- PSL — PRESSURE SWITCH (LOW PRESS ALARM)
- FS-XXX — FLOW SWITCH: TAG No. "XXX"
- AMM-202-24VDC — CONDUIT TAG (TYP)
- L/R — LOCAL/REMOTE
- VFD — VARIABLE FREQUENCY DRIVE

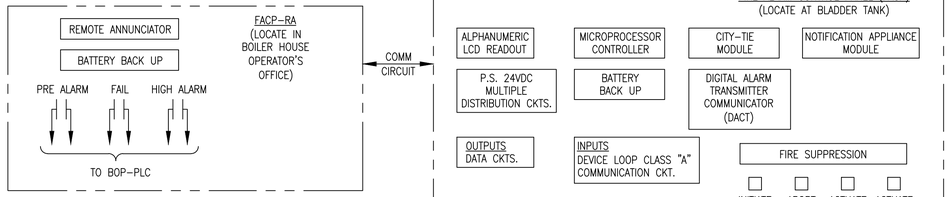

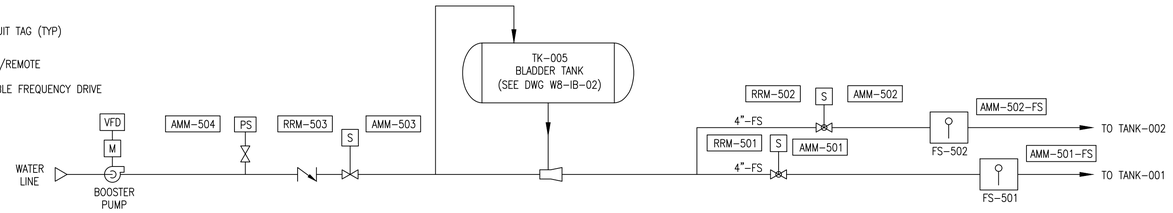

GENERAL NOTES:

A. THE SYSTEM AS SHOWN IS A GENERAL CONCEPTUAL LAYOUT. THE CONTRACTOR SHALL COORDINATE THE EQUIPMENT REQUIRED WITH HIS SUPPLIERS/MANUFACTURERS TO PROVIDE AN INTEGRATED FIRE ALARM & FIRE CONTROL SYSTEM. ALL ITEMS REQUIRED FOR A COMPLETE SYSTEM SHALL BE PROVIDED, WHETHER OR NOT SHOWN ON THIS DRAWING.

B. THE FACP CONDUITS & CABLES ARE SHOWN ON THIS DRAWING. THEY ARE NOT SHOWN ON THE CONDUIT & CABLE SCHEDULE, DWG. EZ-02.

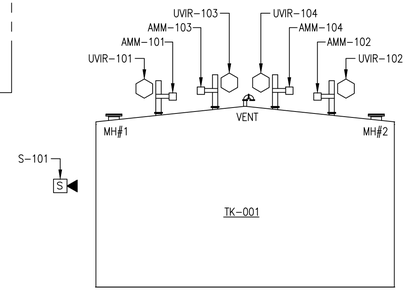

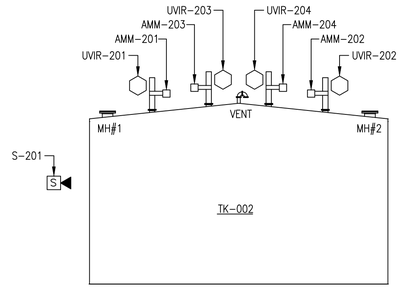

FACP - SYSTEM CONFIGURATION

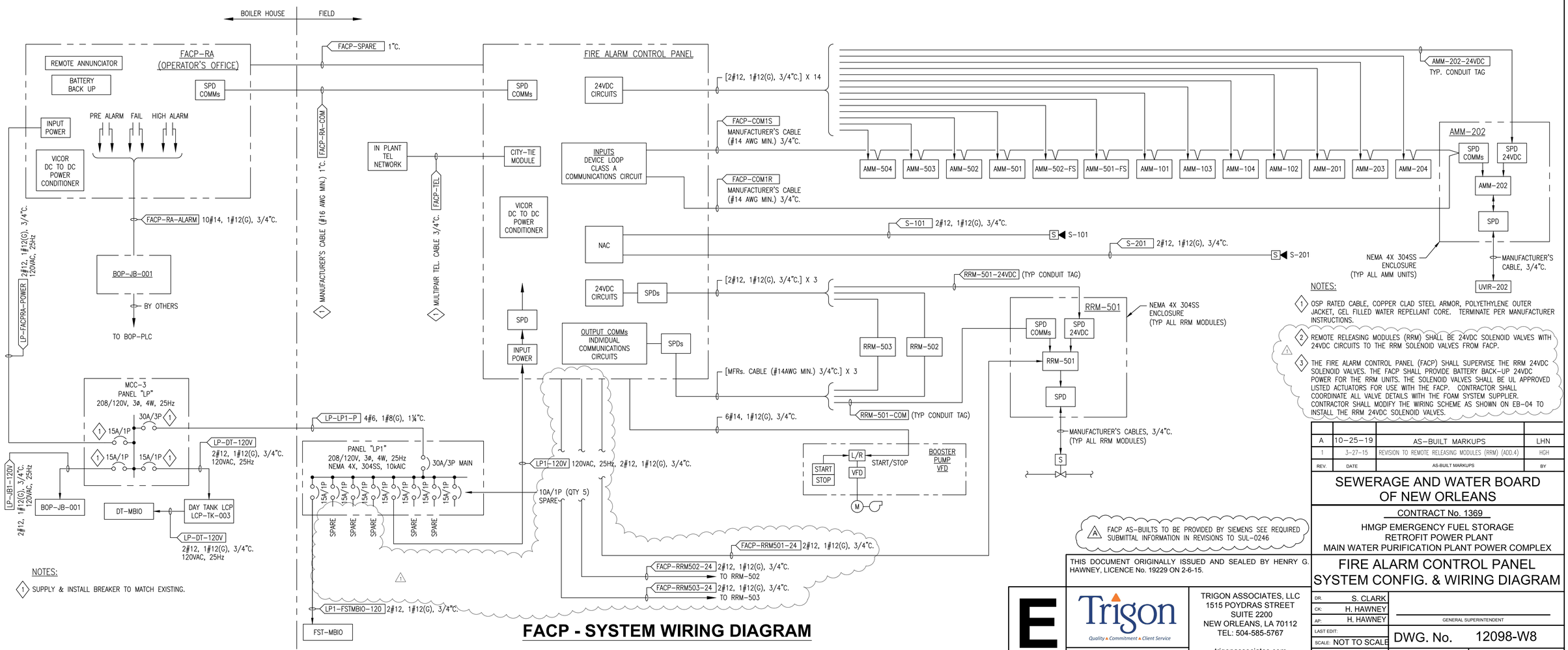

FACP - SYSTEM WIRING DIAGRAM

NOTES:

1. SUPPLY & INSTALL BREAKER TO MATCH EXISTING.

NOTES:

1. OSP RATED CABLE, COPPER CLAD STEEL ARMOR, POLYETHYLENE OUTER JACKET, GEL FILLED WATER REPELLANT CORE. TERMINATE PER MANUFACTURER INSTRUCTIONS.
2. REMOTE RELEASING MODULES (RRM) SHALL BE 24VDC SOLENOID VALVES WITH 24VDC CIRCUITS TO THE RRM SOLENOID VALVES FROM FACP.
3. THE FIRE ALARM CONTROL PANEL (FACP) SHALL SUPERVISE THE RRM 24VDC SOLENOID VALVES. THE FACP SHALL PROVIDE BATTERY BACK-UP 24VDC POWER FOR THE RRM UNITS. THE SOLENOID VALVES SHALL BE UL APPROVED LISTED ACTUATORS FOR USE WITH THE FACP. CONTRACTOR SHALL COORDINATE ALL VALVE DETAILS WITH THE FOAM SYSTEM SUPPLIER. CONTRACTOR SHALL MODIFY THE WIRING SCHEME AS SHOWN ON EB-04 TO INSTALL THE RRM 24VDC SOLENOID VALVES.

A FACP AS-BUILTS TO BE PROVIDED BY SIEMENS SEE REQUIRED SUBMITTAL INFORMATION IN REVISIONS TO SUL-0246

REV.	DATE	AS-BUILT MARKUPS	BY
A	10-25-19	AS-BUILT MARKUPS	LHN
1	3-27-15	REVISION TO REMOTE RELEASING MODULES (RRM) (ADD.4)	HGH

THIS DOCUMENT ORIGINALLY ISSUED AND SEALED BY HENRY G. HAWNEY, LICENCE No. 19229 ON 2-6-15.

SEWERAGE AND WATER BOARD OF NEW ORLEANS

CONTRACT No. 1369

HMGP EMERGENCY FUEL STORAGE RETROFIT POWER PLANT
MAIN WATER PURIFICATION PLANT POWER COMPLEX

FIRE ALARM CONTROL PANEL SYSTEM CONFIG. & WIRING DIAGRAM

E

Trigon — Quality ▲ Commitment ▲ Client Service

TRIGON DWG. NO. EB-04

TRIGON ASSOCIATES, LLC
1515 POYDRAS STREET
SUITE 2200
NEW ORLEANS, LA 70112
TEL: 504-585-5767
trigonassociates.com

DR.	S. CLARK
CK:	H. HAWNEY
AP:	H. HAWNEY
LAST EDIT:	
SCALE:	NOT TO SCALE
DATE:	JANUARY 28, 2015

GENERAL SUPERINTENDENT

DWG. No. 12098-W8

SET NO: SHEET NO: 50 OF 72

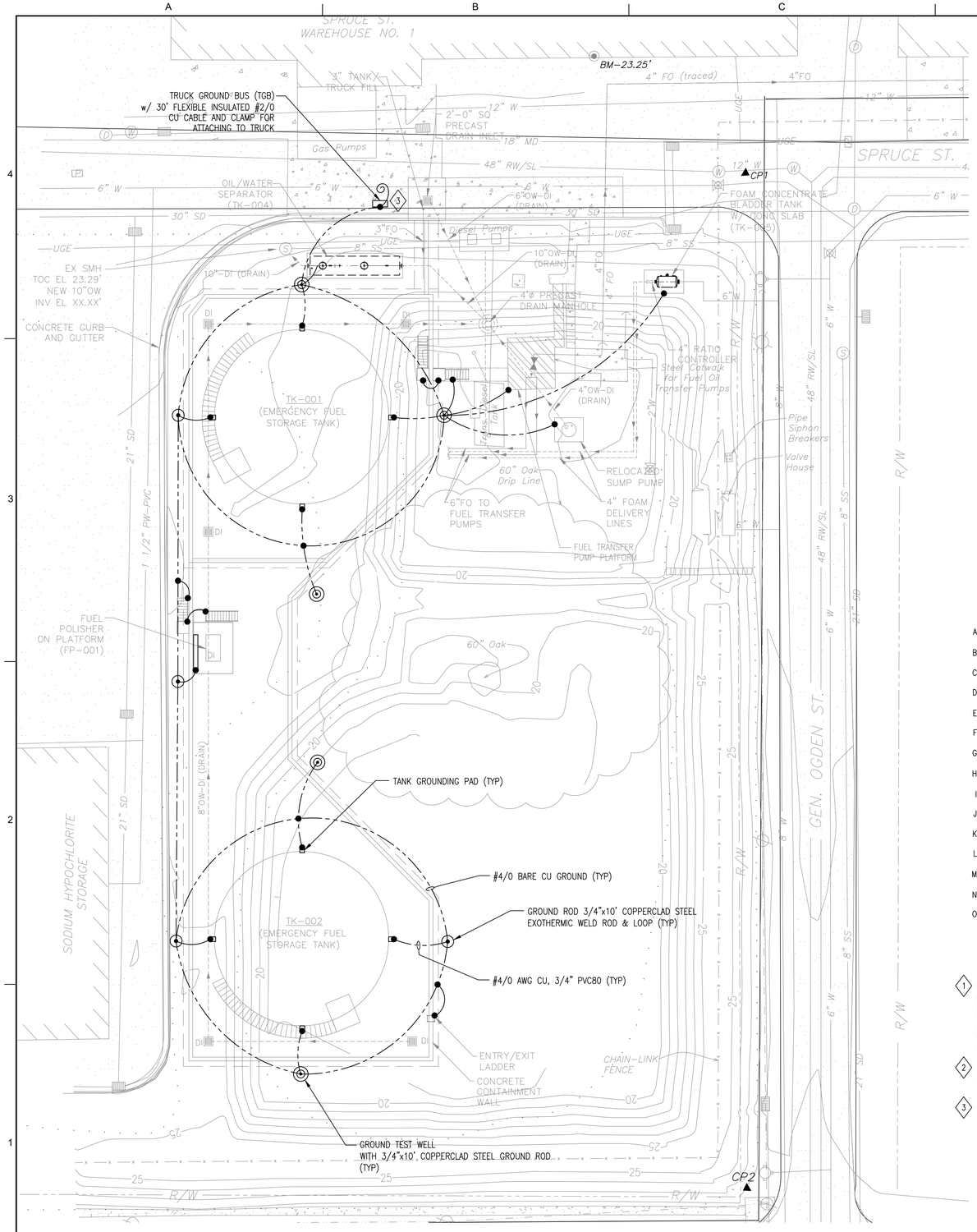

FUEL STORAGE TANKS - GROUNDING PLAN

1 — PLAN

SCALE: 1"=20'

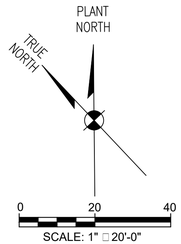

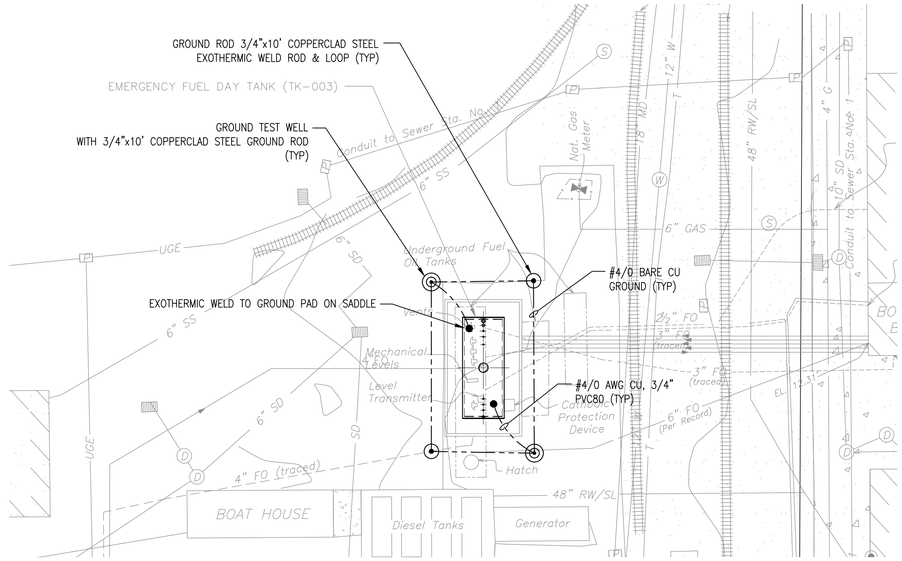

DAY TANK - GROUNDING PLAN

2 — PLAN

SCALE: 1"=20'

GENERAL NOTES:

A. ALL EXTERIOR CONNECTIONS SHALL BE EXOTHERMIC WELDS.

B. INTERIOR CONNECTIONS SHALL USE CADWELD OR 2-HOLE (COMPRESSION) CONNECTORS FOR WIRES AND APPROVED GROUND CLAMPS FOR PIPES.

C. CONDUIT AND SLEEVES SHALL BE PVC (SCH. 80).

D. NO METALLIC SLEEVES, STRAPS, HANGERS, CLAMPS, ETC. SHALL ENCIRCLE ANY GROUND WIRE IN THE GROUND SYSTEM. USE PVC, NYLON AND FIBERGLASS WHERE POSSIBLE.

E. NO "T" CONNECTIONS (EXCEPT RING GROUND TO ROD) ARE ALLOWED IN ANY GROUND WIRE – USE PARALLEL CONNECTORS.

F. LIMIT THE RUNNING LENGTH OF ANY GROUND WIRE TO 200 FEET.

G. PHOTOGRAPHS OF ALL BURIED CONNECTIONS (TO PIPES, CONDUIT, ETC.), ARE REQUIRED.

H. A "WELDING PERMIT" IS REQUIRED FOR CADWELDING, WELDING ON OR INSIDE THE STRUCTURE.

I. MINIMUM BENDING RADIUS FOR ALL GROUND WIRES IS 12".

J. COAT ALL BOLTED CONNECTIONS WITH ANTI-OXIDANT.

K. BOND ALL METALLIC CONDUITS TO CLOSEST GROUND BUS (-GB) WHERE THEY ENTER A ROOM OR DEDICATED SPACE. USE BURNDY TIN PLATED 'GAR'.

L. RUN GROUNDING CONDUCTOR AS SHORT AND AS STRAIGHT AS POSSIBLE.

M. ALL BENDS AND CURVES SHALL BE TOWARD THE GROUND LOCATION (GROUNDED END) OF CONDUCTOR.

N. GROUNDING CONDUCTORS SHALL BE SECURELY FASTENED AT INTERVALS NOT EXCEEDING 36".

O. TINNED COPPER, TIN PLATED CONNECTORS SHALL BE USED WHEN CONNECTING TO GALVANIZED STEEL.

SPECIFIC NOTES:

1. PROVIDE LIGHTNING PROTECTION SYSTEM (LPS) ON STORAGE TANKS PER SPECIFICATIONS. LIGHTNING PROTECTION SYSTEM (LPS) DOWN CONDUCTORS ARE EXOTHERMICALLY CONNECTED TO 4/0 GROUND LOOP. COORDINATE SYSTEM PROTECTION LOCATION OF DOWN CONDUCTORS, ETC. WITH LPS CONTRACTOR. LPS CONTRACTOR TO COORDINATE GROUNDING CONNECTIONS WITH ELECTRICAL CONTRACTOR SUCH THAT ALL METAL ITEMS ARE BONDED AND ALL OUTSIDE BLDG. STEEL IS GROUNDED AND DESIGN COORDINATED PER NEC AND NFPA STANDARDS. KEEP LPS DOWN CONDUCTORS MINIMUM 6' AWAY FROM ELECTRONIC GEAR. COORDINATE WITH CONTRACTOR.

2. AT STORAGE TANK FACILITY, THERMOWELD INCOMING DUCT BANK GROUND WIRE TO GROUND LOOP. AT OPPOSITE END OF DUCT BANK, BOND DUCT BANK GROUND TO CONDUITS USING TIN PLATED "GAR" CONNECTORS.

3. CONNECT WITH 2 HOLE COMPRESSION CONNECTORS.

LEGEND:

- TGB — TRUCK GROUND BUS, 4"x ¼"x6" TIN PLATED Cu BAR (SEE SPECS)
- EXOTHERMIC CONNECTION
- 2-HOLE UL LISTED COMPRESSION GROUNDING CONNECTOR
- GROUND WIRE
- GROUND ROD: 3/4"x10', COPPER CLAD STEEL, THERMOWELD GROUND LOOP TO ROD
- GROUND TEST WELL WITH GROUND ROD: 3/4"x10', COPPER CLAD STEEL

REV.	DATE	AS-BUILT MARKUPS	BY
A	10-25-19	AS-BUILT MARKUPS	LHN

A LIGHTNING PROTECTION AS-BUILTS PROVIDED BY BONDED VIA SUL-0240

THIS DOCUMENT ORIGINALLY ISSUED AND SEALED BY HENRY G. HAWNEY, LICENCE N□ 19229 ON 2-6-15.

SEWERAGE AND WATER BOARD OF NEW ORLEANS

CONTRACT N□ 1369

HMGP EMERGENCY FUEL STORAGE RETROFIT POWER PLANT
MAIN WATER PURIFICATION PLANT POWER COMPLEX

FUEL STORAGE & DAY TANKS GROUNDING PLANS

E

Trigon — Quality ▲ Commitment ▲ Client Service

TRIGON DWG. NO. EB-05

TRIGON ASSOCIATES, LLC
1515 POYDRAS STREET
SUITE 2200
NEW ORLEANS, LA 70112
TEL: 504-585-5767
trig□nass□□lat□s.□□m

DR:	S. CLARK
CK:	H. HAWNEY
AP:	H. HAWNEY
LAST EDIT:	
SCALE:	1"□20'-0"
DATE:	JANUARY 28, 2015

GENERAL SUPERINTENDENT

DWG. N□. 12098-W8

SET NO: SHEET NO: 51 OF 72

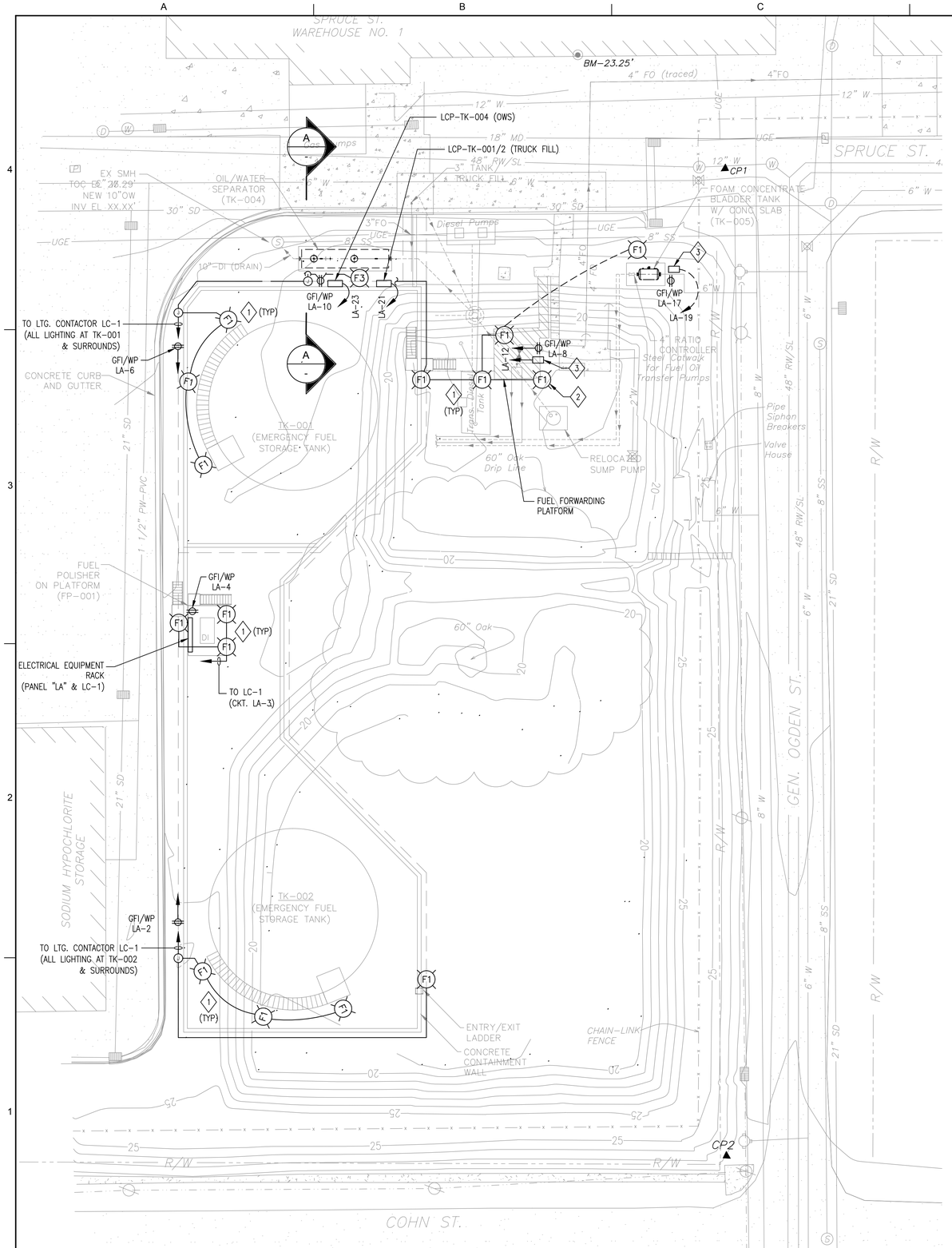

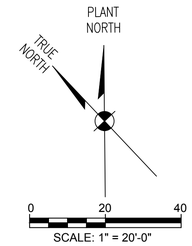

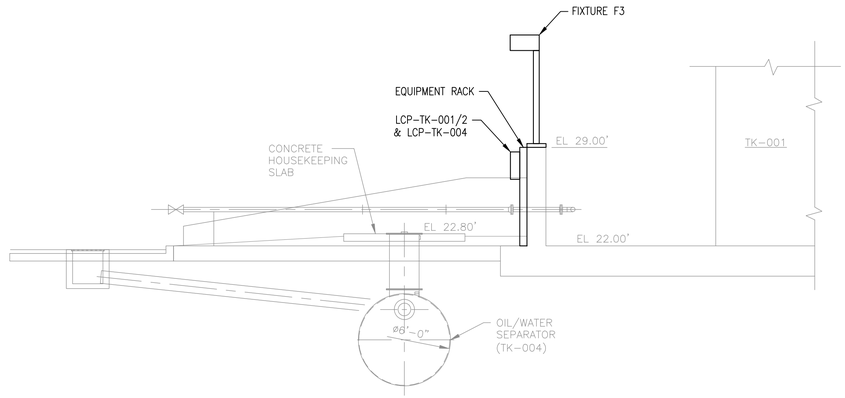

A - **SECTION**
SCALE:1"=5'-0"

GENERAL NOTES:

A CONDUITS SHALL NOT PENETRATE STORAGE TANK FLOOR INSIDE CONTAINMENT AREA. RUN CONDUITS EXPOSED ALONG CONTAINMENT WALLS.

NOTES:

1. FIXTURE F1: WHERE MOUNTED ON PROPOSED EQUIPMENT, CONTRACTOR SHALL COORDINATE WITH HIS SUPPLIERS, TO PROVIDE A MOUNTING BASE PLATE FOR FIXTURE F1. THE ENTIRE ASSEMBLED FIXTURE SUPPORT SHALL BE RATED FOR 150MPH WIND LOAD ON THE FIXTURE.
2. FIXTURE F1: MOUNTED ON EXISTING FUEL FORWARDING PLATFORM: CONTRACTOR SHALL PROVIDE A FIXTURE BASE PLATE, BOLTED TO THE EXISTING STRUCTURE, RATED FOR 150MPH WIND LOAD ON THE FIXTURE.
3. SPARE CIRCUIT: TERMINATE IN NEMA 4X 304SS ENCLOSURE 6"x4"x4".
4. SEE DWG. EZ-03 FOR FIXTURE SCHEDULE.

REV.	DATE		BY
A	10-25-19	AS-BUILT MARKUPS	LHN

A AS-BUILT REVISIONS NOT PROVIDED FOR THIS SHEET BY THE CONTRACTOR

SEWERAGE AND WATER BOARD OF NEW ORLEANS

CONTRACT No. 1369

HMGP EMERGENCY FUEL STORAGE RETROFIT POWER PLANT
MAIN WATER PURIFICATION PLANT POWER COMPLEX

FUEL STORAGE TANKS SITE PLAN LIGHTING & RECEPTACLES

THIS DOCUMENT ORIGINALLY ISSUED AND SEALED BY HENRY G. HAWNEY, LICENCE No. 19229 ON 2-6-15.

E

Trigon — Quality ▲ Commitment ▲ Client Service

TRIGON DWG. NO. EB-06

TRIGON ASSOCIATES, LLC
1515 POYDRAS STREET
SUITE 2200
NEW ORLEANS, LA 70112
TEL: 504-585-5767

trigonassociates.com

DR:	S. CLARK
CK:	H. HAWNEY
AP:	H. HAWNEY
LAST EDIT:	
SCALE:	1"=20'-0"
DATE:	JANUARY 28, 2015

GENERAL SUPERINTENDENT

DWG. No. 12098-W8

SET NO: SHEET NO: 52 OF 72

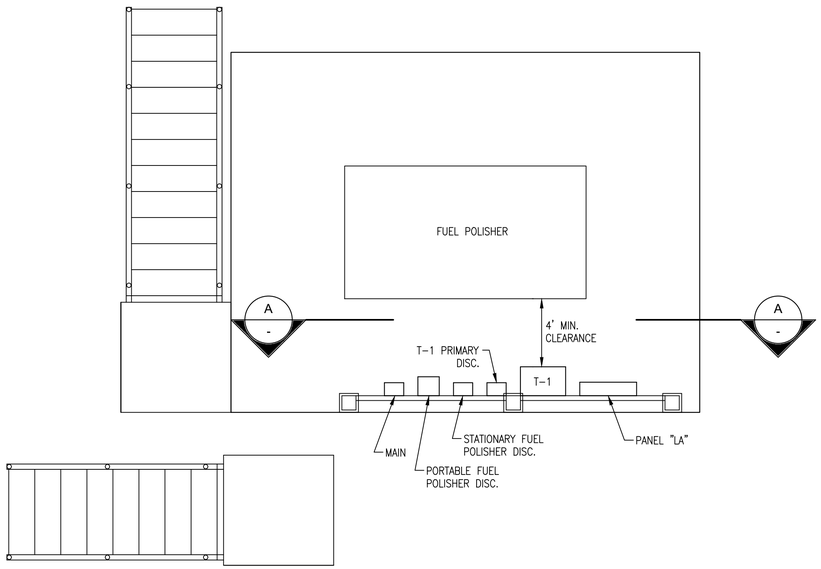

FUEL POLISHER PLATFORM - ENLARGED PLAN

1 — PLAN

SCALE: 3/8"=1'-0"

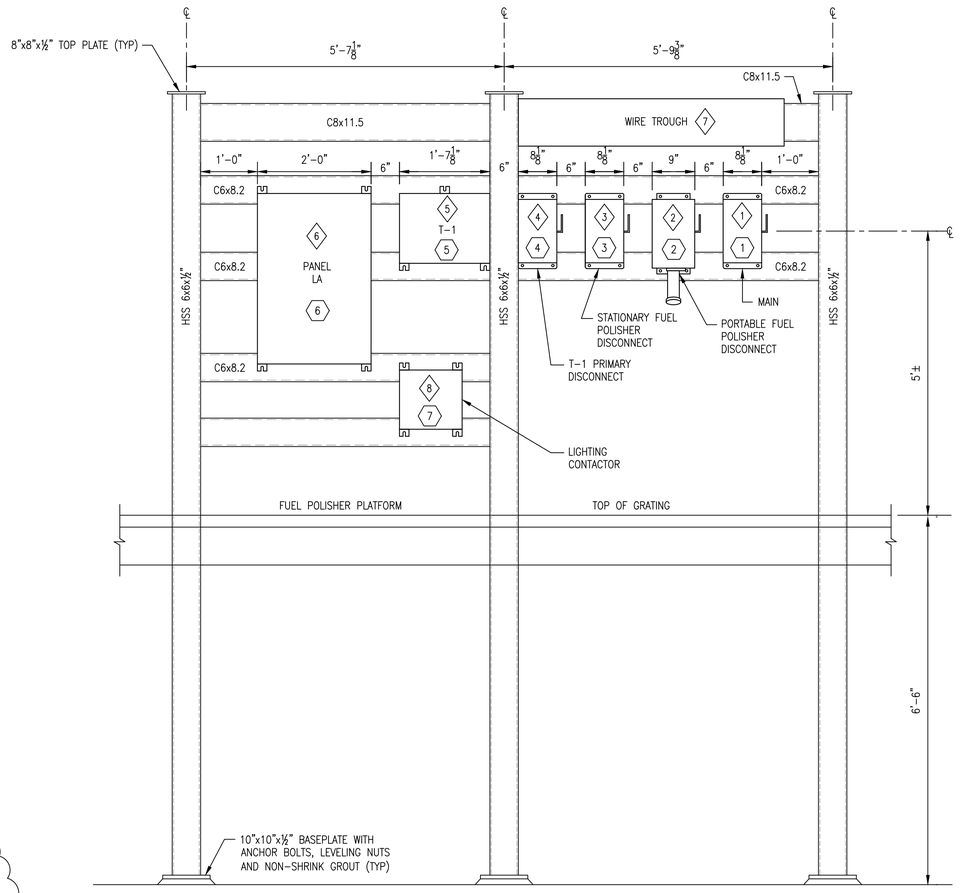

FUEL POLISHER ELECTRICAL EQUIPMENT MOUNTING RACK

A — SECTION

SCALE: 3/4"=1'-0"

NAME PLATE LEGEND:

1. 480V. MAIN DISCONNECT
2. PORTABLE FUEL POLISHER
3. STATIONARY FUEL POLISHER
4. 480V. FDS, TRANSFORMER T-1
5. TRANSFORMER T-1, 9kVA, 120/208V, 3ø, 4W.
6. PANEL LA, 120/208V, 3ø, 4W.
7. LIGHTING CONTACTOR (LC-1) STORAGE TANKS

NOTES:

1. HEAVY DUTY, NON FUSED SAFETY SWITCH, 60A, 600V, 3P, 3W, NEMA 4X, 304SS.
2. HEAVY DUTY, FUSED SAFETY SWITCH, 30A, 600V, 3P, 4W. INTERLOCKED RECEPTACLE, NEMA 4X, 304SS, FUSED, VIEWING WINDOW, AND MATING PLUG.
3. HEAVY DUTY, FUSED SAFETY SWITCH, 30A, 600V, 3P, 3W, NEMA 4X, 304SS.
4. HEAVY DUTY, FUSED SAFETY SWITCH, 30A, 600V, 3P, 3W, NEMA 4X, 304SS.
5. TRANSFORMER, 316SS ENCLOSURE, NEMA 4X, EPOXY ENCAPSULATED.
6. PANELBOARD, NEMA 4X, 304SS ENCLOSURE, 3 POINT LATCHING HANDLE ON DOOR.
7. WIRING TROUGH, 316SS NEMA 4X WITH BOLT-ON GASKETED COVER, SIZE PER NEC.
8. 3 POLE COMBINATION LIGHTING CONTACTOR, H/O/A, 120V. CONTROL TRANSFORMER, 30A, 240V, NEMA 4X, 304SS ENCLOSURE.
9. RACK SHALL BE HOT DIPPED GALVANIZED AFTER FABRICATION.
10. CONTRACTOR SHALL COORDINATE DETAILS WITH PLATFORM SUPPLIER. SEE DRAWING SB-11.

PLAN VIEW AT FLOOR

NOTES:

1. NEMA 3R ALUMINUM ENCLOSURE.
2. PADLOCKABLE HANDLE, 3 POINT LATCH.
3. MAIN BREAKER DISCONNECT: EXTERNALLY MOUNTED OPERATIONS HANDLE ON DRIVE ENCLOSURE DOOR.
4. ACCESS COVER WITH VFD CONTROL COMPONENTS MOUNTED ON OUTSIDE ENCLOSURE DOOR UNDER THE COVER. MOUNT CONTROL SWITCHES, PILOT LIGHTS, SUCH AS LOCAL/REMOTE, SELECTOR SWITCH, START/STOP PUSHBUTTONS, AND SPEED POT.
5. ENCLOSURE PAINT COATING-MANUFACTURER'S STANADARD GENERALLY AS FOLLOWS:
   a. PRIMER
   b. ELECTROSTATICALLY APPLIED DRY POLYESTER POWDER COATING - WHITE COLOR.

FOAM TANK BOOSTER PUMP - ~~VFD DRIVE~~ ENCLOSURE

N.T.S.

A FOAM TANK BOOSTER PUMP WAS REPLACED WITH NEMA 4X STARTER PER HAND SKETCHED SCHEMATIC SUBMITTED BY RED GROUP VIA SUL-0244.A

REV.	DATE		BY
A	10-25-19	AS-BUILT MARKUPS	LHN

SEWERAGE AND WATER BOARD OF NEW ORLEANS

CONTRACT No. 1369

HMGP EMERGENCY FUEL STORAGE
RETROFIT POWER PLANT
MAIN WATER PURIFICATION PLANT POWER COMPLEX

FUEL POLISHER PLATFORM LAYOUT
FOAM TANK BOOSTER PUMP

THIS DOCUMENT ORIGINALLY ISSUED AND SEALED BY HENRY G. HAWNEY, LICENCE No. 19229 ON 2-6-15.

Trigon — Quality ▲ Commitment ▲ Client Service

TRIGON ASSOCIATES, LLC
1515 POYDRAS STREET
SUITE 2200
NEW ORLEANS, LA 70112
TEL: 504-585-5767

trigonassociates.com

TRIGON DWG. NO. EB-07

DR:	S. CLARK
CK:	H. HAWNEY
AP:	H. HAWNEY
LAST EDIT:	
SCALE:	NOT TO SCALE
DATE:	JANUARY 28, 2015

GENERAL SUPERINTENDENT

DWG. No. 12098-W8

SET NO: SHEET NO: 53 OF 72

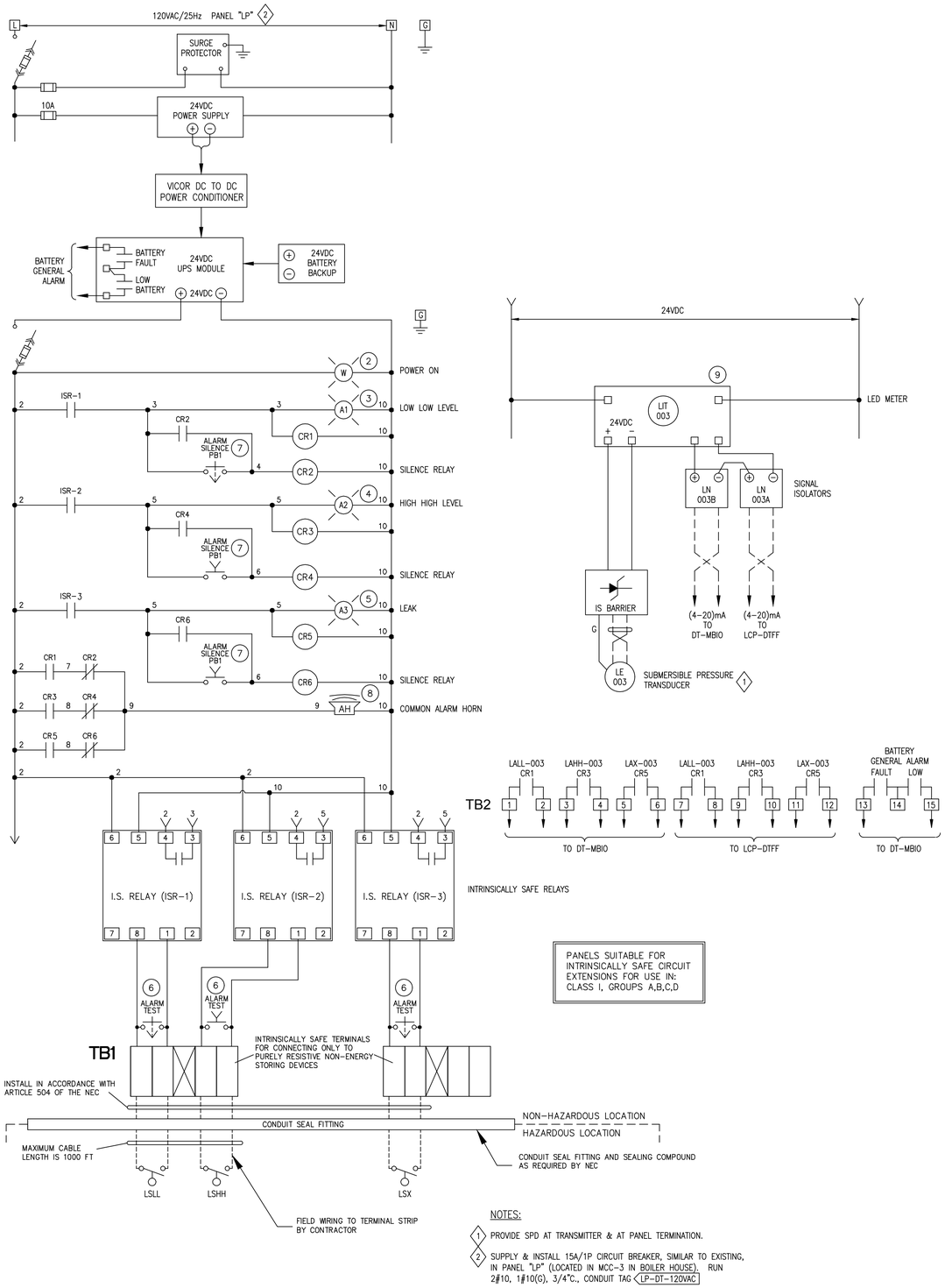

INTRINSICALLY SAFE RELAYS

PANELS SUITABLE FOR INTRINSICALLY SAFE CIRCUIT EXTENSIONS FOR USE IN: CLASS I, GROUPS A,B,C,D

NOTES:

1. PROVIDE SPD AT TRANSMITTER & AT PANEL TERMINATION.
2. SUPPLY & INSTALL 15A/1P CIRCUIT BREAKER, SIMILAR TO EXISTING, IN PANEL "LP" (LOCATED IN MCC-3 IN BOILER HOUSE). RUN 2#10, 1#10(G), 3/4"C., CONDUIT TAG LP-DT-120VAC

DAY TANK LOCAL CONTROL PANEL (LCP-TK-003)

1 SCHEMATIC

NTS

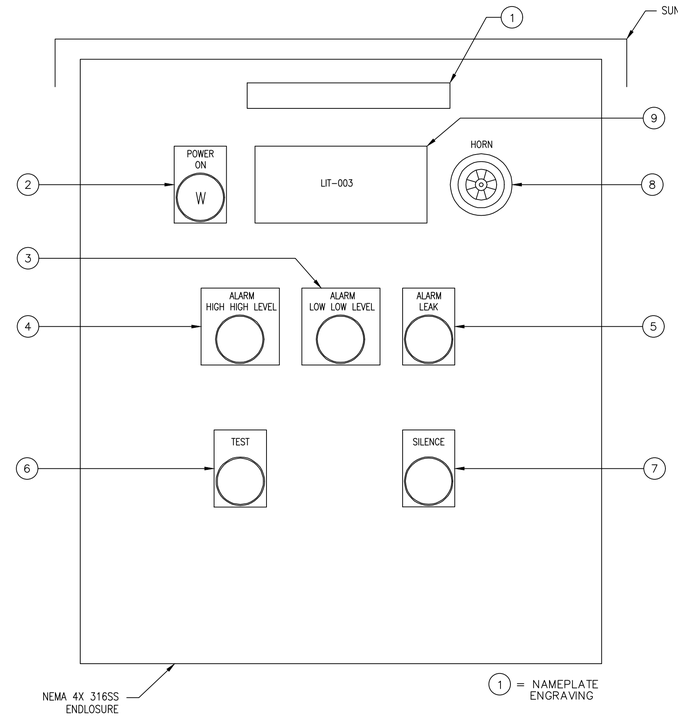

1 DAY TANK LOCAL CONTROL PANEL (LCP-TK-003)

A DIAGRAM

NTS

GENERAL NOTES:

A FOR CONTROL PANEL COMPONENTS, SEE SPECIFICATION SECTION 26 61 00.

A CONTROL PANEL AS-BUILTS PROVIDED BY RED GROUP VIA SUL-0244

THIS DOCUMENT ORIGINALLY ISSUED AND SEALED BY HENRY G. HAWNEY, LICENCE No. 19229 ON 2-6-15.

REV.	DATE		BY
A	10-25-19	AS-BUILT MARKUPS	LHN

SEWERAGE AND WATER BOARD OF NEW ORLEANS

CONTRACT No. 1369

HMGP EMERGENCY FUEL STORAGE
RETROFIT POWER PLANT
MAIN WATER PURIFICATION PLANT POWER COMPLEX

DAY TANK SCHEMATIC & LOCAL CONTROL PANEL

TRIGON ASSOCIATES, LLC
1515 POYDRAS STREET
SUITE 2200
NEW ORLEANS, LA 70112
TEL: 504-585-5767
trigonassociates.com

Trigon — Quality ▲ Commitment ▲ Client Service

TRIGON DWG. NO. EC-01

DR:	S. CLARK
CK:	H. HAWNEY
AP:	H. HAWNEY
LAST EDIT:	
SCALE:	NOT TO SCALE
DATE:	JANUARY 28, 2015

GENERAL SUPERINTENDENT

DWG. No. 12098-W8

SET NO: SHEET NO: 54 OF 72

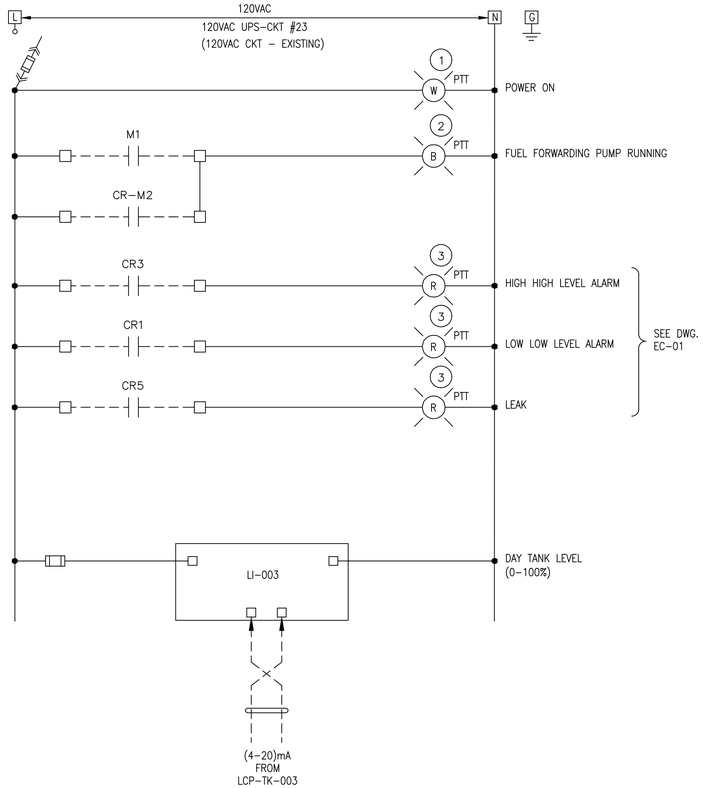

LOCAL CONTROL PANEL - DAY TANK & FUEL FORWARDING PUMPS (LCP-DTFF)

1 SCHEMATIC
– NTS

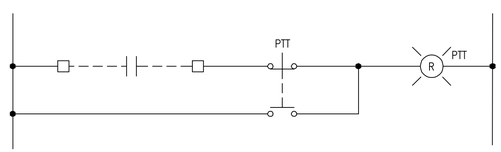

PTT SCHEMATIC - TYPICAL ALL PTT PILOT LIGHTS

2 SCHEMATIC
– NTS

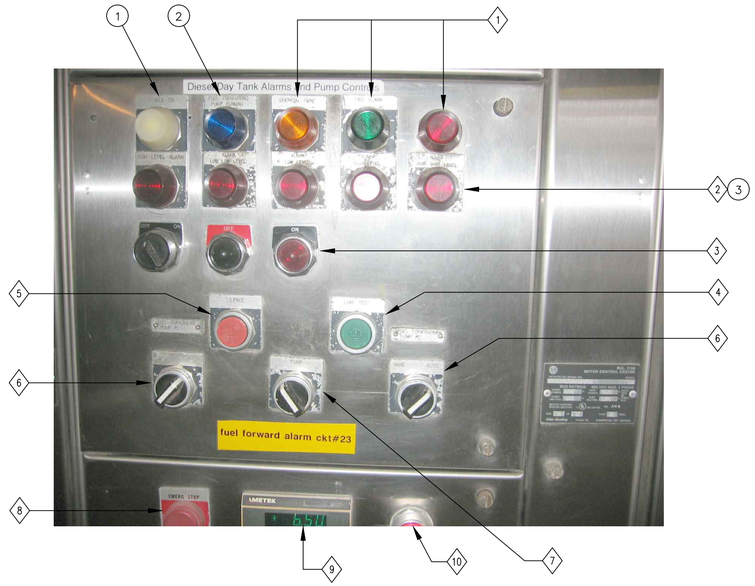

LOCAL CONTROL PANEL - DAY TANK (LCP-DTFF): MODIFICATIONS

A DETAIL
– NTS

GENERAL NOTES:

A. PRIOR TO PERFORMING ANY WORK, CONTRACTOR SHALL TRACE OUT ALL EXISTING CONTROL WIRING & GENERATE A DRAWING SHOWING EXISTING CONDITIONS. CONSULT WITH ENGINEER BEFORE PROCEEDING TO MODIFY THE PANEL.

B. PILOT LIGHTS: REPLACE ALL PILOT LIGHTS WITH LED TYPE, NEMA 4, PUSH TO TEST, A-B #800H.

SPECIFIC NOTES:

1. CONTRACTOR TO FIELD DETERMINE THE INITIATING SIGNAL FOR PILOT LIGHTS. IF INITIATING SIGNAL EQUIPMENT IS NOT IN USE, REMOVE PILOT LIGHTS, WIRING, & COVER WITH A BLANK FILLER PLATE.
2. LEVEL PILOT LIGHTS:
REPLACE THE HIGH HIGH LEVEL AND LOW LOW LEVEL PILOT LIGHTS WITH LED, PTT TYPE. REMOVE THE REMAINING PILOT LIGHTS, ASSOCIATED WIRING & COVER WITH A BLANK FILLER PLATE.
3. OFF/ON & PILOT LIGHTS:
THESE ITEMS ARE CURRENTLY USED FOR CHEMICAL FUEL ADDITIVE AND SHALL REMAIN.
4. LAMP TEST:
REMOVE AND COVER WITH A BLANK FILLER PLATE.
5. SILENCE:
REMOVE THIS PUSH BUTTON & COVER WITH A BLANK FILLER PLATE.
6. FUEL FORWARDING PUMP 1, PUMP 2 HAND/AUTO:
REPLACE SWITCH AND NAMEPLATE WITH HAND/OFF/COMP, 3 POSITION SELECTOR SWITCH, SPRING RETURN FROM HAND TO OFF, ALLEN BRADLEY 800H.
7. PUMP 1/PUMP 2 SELECTOR SWITCH:
SELECTOR SWITCH TO REMAIN. ADD CONTACT BLOCKS AS REQUIRED.
8. EMERGENCY STOP:
REPLACE WITH MUSHROOM HEAD E-STOP, PUSH/PULL, ALLEN BRADLEY 800H.
9. DAY TANK LEVEL INDICATOR LI-003:
REUSE THE INDICATOR. PROVIDE A FULL NAMEPLATE WITH DESCRIPTION AND TAG NUMBER.
10. RESET PILOT LIGHT:
CONTRACTOR TO FIELD INVESTIGATE FUNCTION. CONSULT WITH ENGINEER IF LIGHT SHOULD BE LEFT IN PLACE OR REMOVED.

REV.	DATE		BY
A	10-25-19	AS-BUILT MARKUPS	LHN

SEWERAGE AND WATER BOARD OF NEW ORLEANS

CONTRACT No. 1369

HMGP EMERGENCY FUEL STORAGE
RETROFIT POWER PLANT
MAIN WATER PURIFICATION PLANT POWER COMPLEX

DAY TANK SCHEMATIC & LOCAL CONTROL PANEL

A CONTROL PANEL AS-BUILTS PROVIDED BY RED GROUP VIA SUL-0244

THIS DOCUMENT ORIGINALLY ISSUED AND SEALED BY HENRY G. HAWNEY, LICENCE No. 19229 ON 2-6-15.

TRIGON ASSOCIATES, LLC
1515 POYDRAS STREET
SUITE 2200
NEW ORLEANS, LA 70112
TEL: 504-585-5767
trigonassociates.com

Trigon
Quality ▲ Commitment ▲ Client Service

TRIGON DWG. NO. EC-02

DR:	S. CLARK
CK:	H. HAWNEY
AP:	H. HAWNEY
LAST EDIT:	
SCALE:	NOT TO SCALE
DATE:	JANUARY 28, 2015

GENERAL SUPERINTENDENT

DWG. No. 12098-W8

SET NO: SHEET NO: 55 OF 72

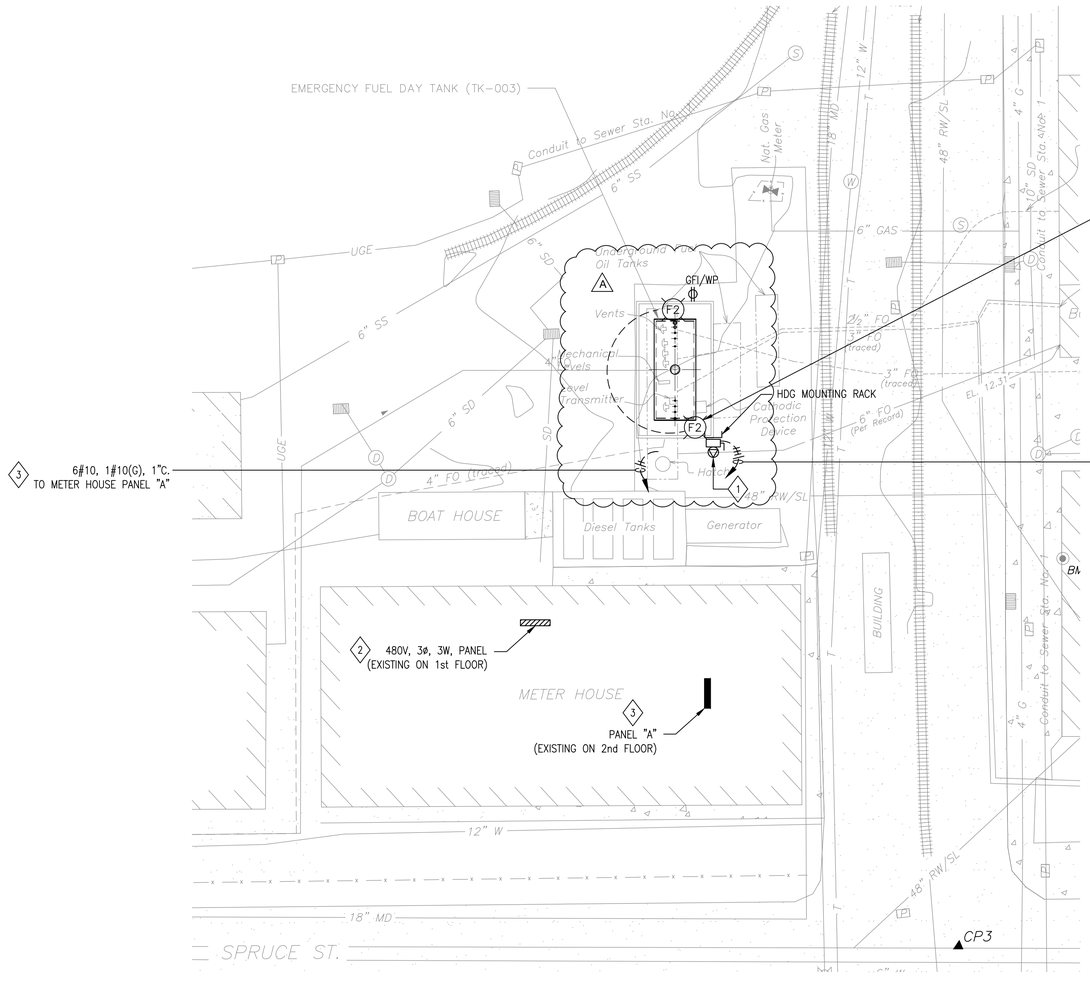

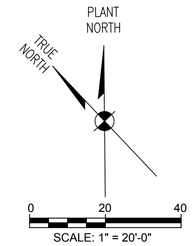

NOTES:

1. 30A, 3P, 4W, INTERLOCKED RECEPTACLE, HP RATED (7½HP), NEMA 4X 304SS, FUSED, VIEWING WINDOW, CROUSE HINDS WSRDW3352 SM S901, WITH MATING 3W, 4P PLUG, CROUSE HINDS APJ3485 OR EQUAL.
2. 480V, 3ø, 3W. PANEL: (EXISTING): SQ-D, I LINE, HCM CAT# 2347-4. INSTALL 30A/3P, 480V, CIRCUIT BREAKER IN PANEL FOR 480V. RECEPTACLE AT DAY TANK. RECEPTACLE IS FOR PORTABLE FUEL POLISHER.
3. INSTALL 3-20A/1P BREAKERS IN PANEL "A" TO MATCH EXISTING. RUN 1 CIRCUIT FOR DRY TANK LIGHTING. RUN 1 CIRCUIT AS SPARE TO DAY TANK LCP MOUNTING RACK. TERMINATE THE SPARE CIRCUIT IN 6"x4"x4" NEMA 4X, 304SS ENCLOSURE. RUN 1 CIRCUIT TO GFI/WP RECEPTACLE. RUN UNDERGROUND FROM METER HOUSE. ROUTE UNDERGROUND AROUND EXISTING EQUIPMENT.
4. FOR FIXTURE SCHEDULE, SEE DWG. EZ-03.

REV.	DATE	AS-BUILT MARKUPS	BY
A	10-25-19	AS-BUILT MARKUPS	LHN

SEWERAGE AND WATER BOARD OF NEW ORLEANS

CONTRACT No. 1369

HMGP EMERGENCY FUEL STORAGE
RETROFIT POWER PLANT
MAIN WATER PURIFICATION PLANT POWER COMPLEX

DAY TANK ELECTRICAL SITE PLAN

THIS DOCUMENT ORIGINALLY ISSUED AND SEALED BY HENRY G. HAWNEY, LICENCE No. 19229 ON 2-6-15.

E

Trigon
Quality ▲ Commitment ▲ Client Service

TRIGON DWG. NO. EC-03

TRIGON ASSOCIATES, LLC
1515 POYDRAS STREET
SUITE 2200
NEW ORLEANS, LA 70112
TEL: 504-585-5767

trigonassociates.com

DR:	S. CLARK
CK:	H. HAWNEY
AP:	H. HAWNEY
LAST EDIT:	
SCALE:	1"=20'-0"
DATE:	JANUARY 28, 2015

GENERAL SUPERINTENDENT

DWG. No. 12098-W8

SET NO: SHEET NO: 56 OF 72

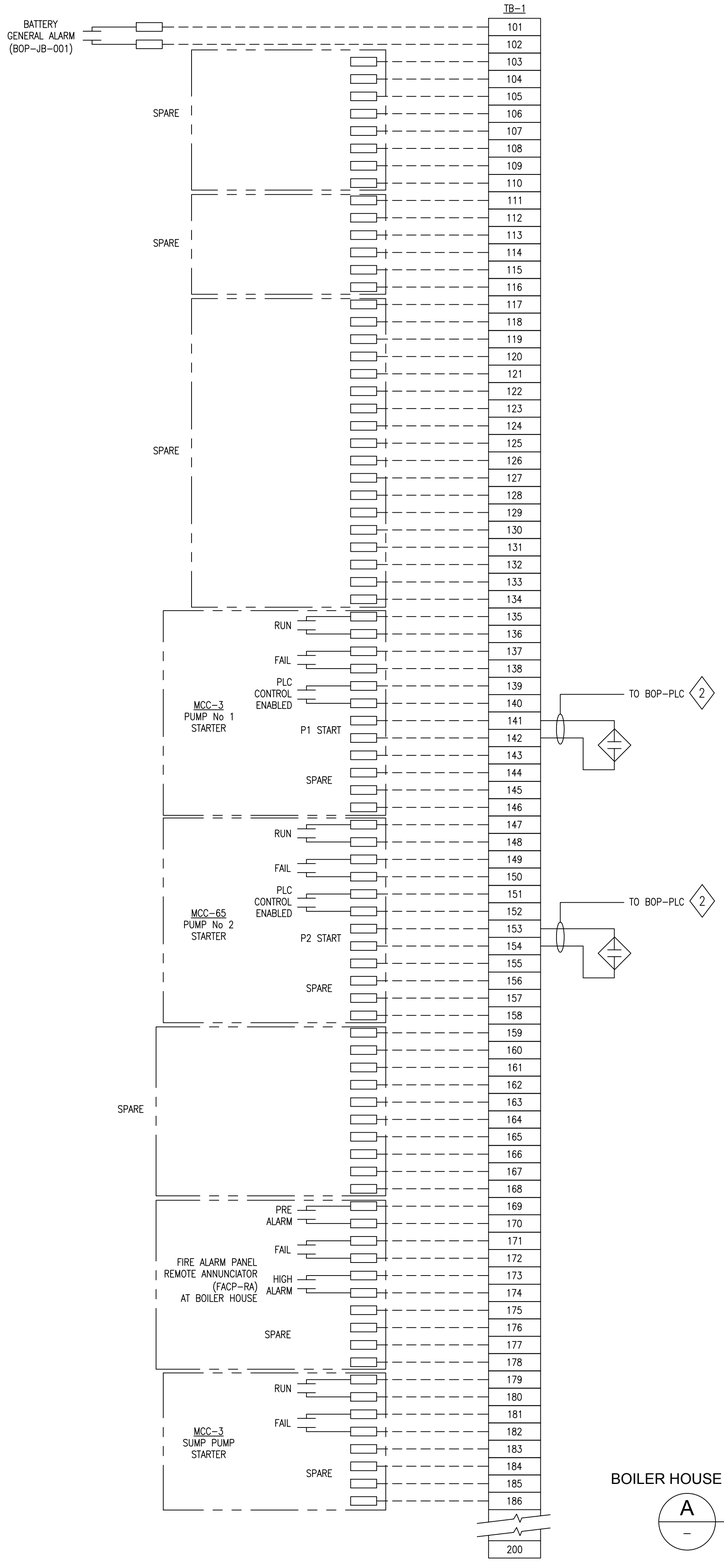

BOILER HOUSE JUNCTION BOX #1 (BOP-JB-001)

A – WIRING DIAGRAM

NTS

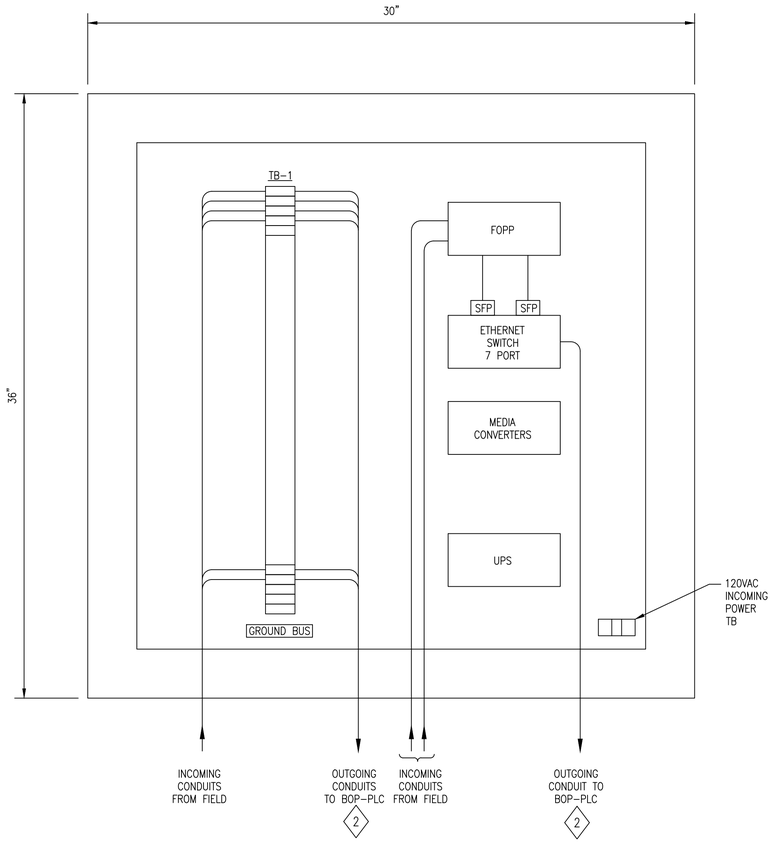

BOILER HOUSE JUNCTION BOX #1 (BOP-JB-001)

1 – DETAIL

NTS

NOTES:

1. BOP-JB-001: NEMA 4X, 304SS, 36"H x 30"W x 10"D, 3 POINT LATCH, HOFFMAN CAT # A36H3010SS6LP3PT OR EQUAL.
2. SEE PROJECT CP1370 FOR INTERCONNECTION TO BOP-JB-001.

REV.	DATE	AS-BUILT MARKUPS	BY
A	10-25-19	AS-BUILT MARKUPS	LHN

A AS-BUILT REVISIONS NOT PROVIDED FOR THIS SHEET BY THE CONTRACTOR

THIS DOCUMENT ORIGINALLY ISSUED AND SEALED BY HENRY G. HAWNEY, LICENCE No. 19229 ON 2-6-15.

SEWERAGE AND WATER BOARD OF NEW ORLEANS

CONTRACT No. 1369

HMGP EMERGENCY FUEL STORAGE RETROFIT POWER PLANT
MAIN WATER PURIFICATION PLANT POWER COMPLEX

BOILER HOUSE JB #1 (BOP-JB-001) WIRING DIAGRAM

E

Trigon
Quality ▲ Commitment ▲ Client Service

TRIGON DWG. NO. EC-04

TRIGON ASSOCIATES, LLC
1515 POYDRAS STREET
SUITE 2200
NEW ORLEANS, LA 70112
TEL: 504-585-5767
trigonassociates.com

DR:	S. CLARK
CK:	H. HAWNEY
AP:	H. HAWNEY
LAST EDIT:	
SCALE:	NOT TO SCALE
DATE:	JANUARY 28, 2015

GENERAL SUPERINTENDENT

DWG. No. 12098-W8

SET NO: SHEET NO: 57 OF 72

LEGEND

FOPP: FIBER OPTIC PATCH PANEL
SFP: SMALL FORM FACTOR PLUGGABLE

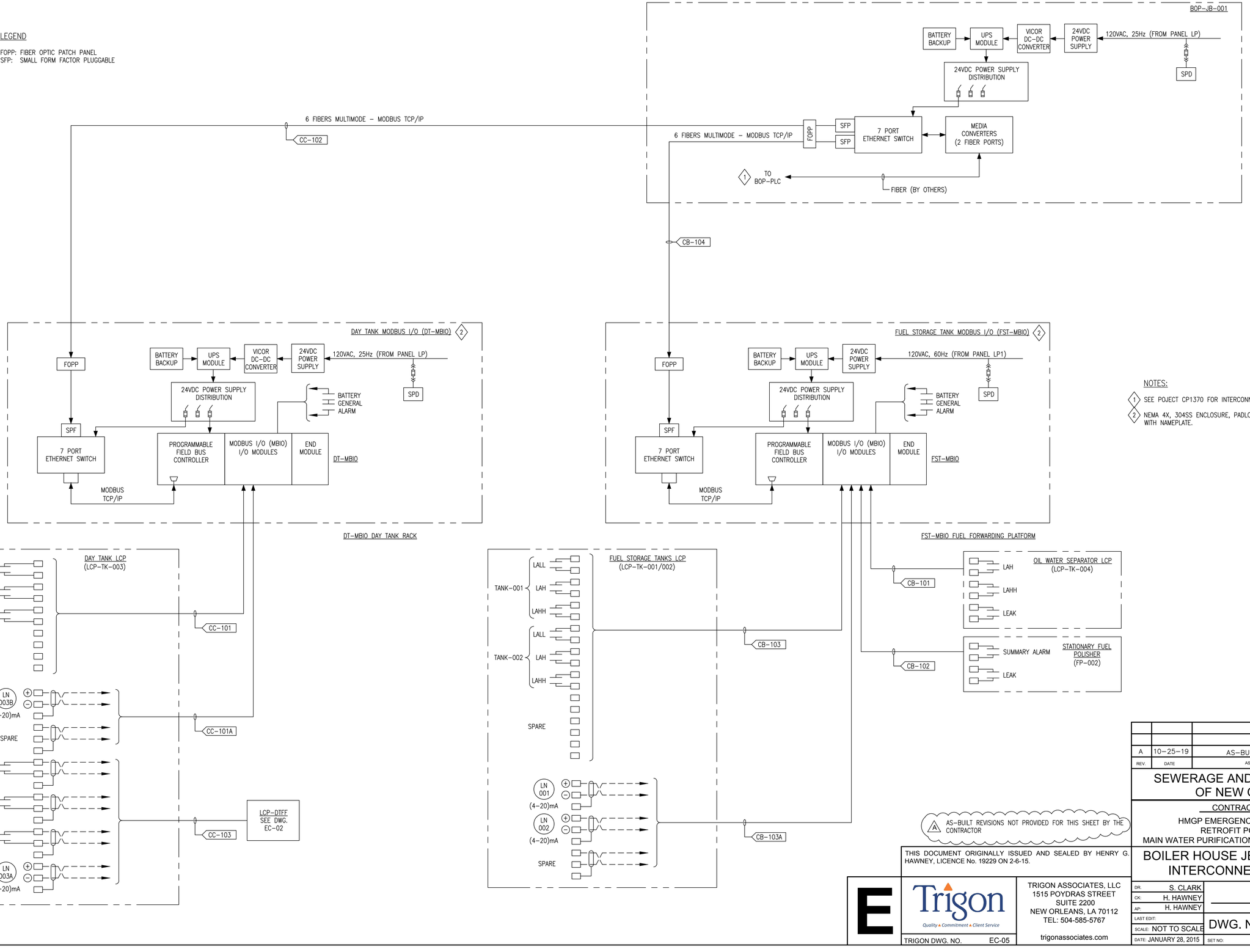

NOTES:

1. SEE POJECT CP1370 FOR INTERCONNECTION TO BOP-JB-001.
2. NEMA 4X, 304SS ENCLOSURE, PADLOCKABLE HANDLE, 3 POINT LATCH, WITH NAMEPLATE.

A AS-BUILT REVISIONS NOT PROVIDED FOR THIS SHEET BY THE CONTRACTOR

THIS DOCUMENT ORIGINALLY ISSUED AND SEALED BY HENRY G. HAWNEY, LICENCE No. 19229 ON 2-6-15.

REV.	DATE		BY
A	10-25-19	AS-BUILT MARKUPS	LHN

SEWERAGE AND WATER BOARD OF NEW ORLEANS

CONTRACT No. 1369

HMGP EMERGENCY FUEL STORAGE
RETROFIT POWER PLANT
MAIN WATER PURIFICATION PLANT POWER COMPLEX

BOILER HOUSE JB #1 (BOP-JB-001) INTERCONNECT DIAGRAM

TRIGON ASSOCIATES, LLC
1515 POYDRAS STREET
SUITE 2200
NEW ORLEANS, LA 70112
TEL: 504-585-5767
trigonassociates.com

Trigon — Quality ▲ Commitment ▲ Client Service

TRIGON DWG. NO. EC-05

DR.	S. CLARK
CK:	H. HAWNEY
AP:	H. HAWNEY
LAST EDIT:	
SCALE:	NOT TO SCALE
DATE:	JANUARY 28, 2015

GENERAL SUPERINTENDENT

DWG. No. 12098-W8

SET NO: SHEET NO: 58 OF 72



EMERGENCY FUEL TANKS

TYPICAL SECTION

SCALE:1/8"=1'-0"

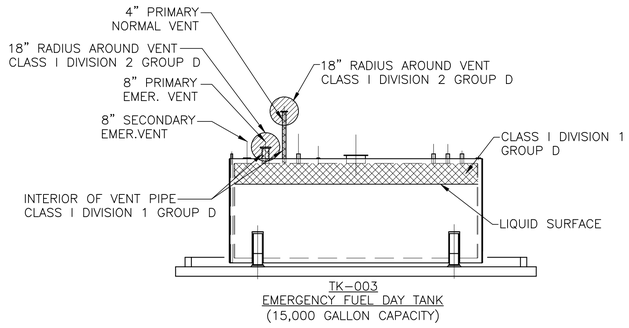

DAY TANK

TYPICAL SECTION

SCALE:1/8"=1'-0"

AREA CLASSIFICATION NOTES:

1. CLASSIFIED AREAS ARE HATCHED AND NOTED.
2. UNCLASSIFIED AREAS ARE UNHATCHED.

LEGEND

- CLASS 1, DIVISION 1, GROUP D
- CLASS 1, DIVISION 2, GROUP D
- UNCLASSIFIED

REV.	DATE		BY
A	10-25-19	AS-BUILT MARKUPS	LHN

SEWERAGE AND WATER BOARD OF NEW ORLEANS

CONTRACT No. 1369

HMGP EMERGENCY FUEL STORAGE
RETROFIT POWER PLANT
MAIN WATER PURIFICATION PLANT POWER COMPLEX

FUEL STORAGE TANKS / DAY TANK AREA CLASSIFICATION

A AS-BUILT REVISIONS NOT PROVIDED FOR THIS SHEET BY THE CONTRACTOR

THIS DOCUMENT ORIGINALLY ISSUED AND SEALED BY HENRY G. HAWNEY, LICENCE No. 19229 ON 2-6-15.

E

Trigon
Quality ▲ Commitment ▲ Client Service

TRIGON DWG. NO. EZ-01

TRIGON ASSOCIATES, LLC
1515 POYDRAS STREET
SUITE 2200
NEW ORLEANS, LA 70112
TEL: 504-585-5767

trigonassociates.com

DR.	SI CLARK
CK:	LH NAGRATH
AP:	H. HAWNEY
LAST EDIT:	
SCALE:	AS NOTED
DATE:	JANUARY 28, 2015

GENERAL SUPERINTENDENT

DWG. No. 12098-W8

SET NO: SHEET NO: 59 OF 72

CONDUIT/CABLE SCHEDULE

CABLE		CONDUIT		FUNCTION	FROM	TO	ROUTE	REMARKS
TAG NO.	CONDUCTORS	TAG NO.	SIZE					
PMH-101	3-1/C#2, 1-1/C#6(G)	PMH-101	2" X 2	480V. POWER	MUD HOUSE MCC	FUEL STORAGE TANKS MAIN DISC. SWITCH	U/G & EXPOSED	RUN 1-2"C. SPARE CONDUIT FROM MUD HOUSE MCC (G3) TO PULL BOX PPB-G3-001A.
PMH-101A	3-1/C#2, 1-1/C#6(G)	PMH-101A	1½"	480V. POWER	FUEL STORAGE TANKS MAIN DISC. SWITCH	WIRE TROUGH	EXPOSED	–
–	–	–	–	–	–	–	–	–
P-101	3-1/C#10, 1-1/C#10(G)	P-101	3/4"	480V. POWER	WIRE TROUGH	PORTABLE FUEL POLISHER DISC. SWITCH	EXPOSED	–
P-102	3-1/C#10, 1-1/C#10(G)	P-102	3/4"	480V. POWER	WIRE TROUGH	STATIONARY FUEL POLISHER DISC. SWITCH	EXPOSED	–
P-102A	3-1/C#10, 1-1/C#10(G)	P-102A	3/4"	480V. POWER	STATIONARY FUEL POLISHER DISC. SWITCH	STATIONARY FUEL POLISHER	EXPOSED	–
P-103	3-1/C#10, 1-1/C#10(G)	P-103	3/4"	480V. POWER	WIRE TROUGH	TRANSFORMER T-1 PRIMARY DISC. SWITCH	EXPOSED	–
P-103A	3-1/C#12, 1-1/C#12(G)	P-103A	3/4"	480V. POWER	TRANSFORMER T-1 PRIMARY DISC. SWITCH	TRANSFORMER T-1	EXPOSED	–
P-103B	4-1/C#8, 1-1/C#8(G)	P-103B	1"	208/120V. POWER	TRANSFORMER T-1	PANEL "LP"	EXPOSED	–
P3-101	3-1/C#4, 1-1/C#8(G)	P3-101	1¼"	208V. POWER	MCC-3	FUEL FORWARDING PUMP No. 1	U/G & EXPOSED	–
P3-102	3-1/C#2, 1-1/C#6	P3-102	2½"	208V. POWER	MCC-3	SUMP PUMP	U/G & EXPOSED	FOAM BOOSTER –
P3-103	3-1/C#2, 1-1/C#6 (A)	P3-103	2½"	208V. POWER	MCC G3/G4 (A)	FOAM BOOSTER PUMP STARTER (A)	U/G & EXPOSED	–
P3-103A	1-3/C#1, WITH GROUND	P3-103A	2½"	208V. POWER	FOAM BOOSTER PUMP STARTER	BOOSTER PUMP	U/G & EXPOSED	SERVICE WIRE VFD CABLE (XHHW-2) (3)
P3-104	EMPTY	P3-104	2½"	POWER	MCC-3	FUEL FORWARDING PLATFORM	U/G & EXPOSED	SPARE CONDUIT
P5-101	3-1/C#10, 1-1/C#10(G)	P5-101	3/4"	440V. POWER	MCC-5	FUEL FORWARDING PUMP No. 2	U/G & EXPOSED	–
C3-101	1-8/C#10 (7#10, 1#10G)	C3-101	1"	CONTROL	MCC-3	FUEL FORWARDING PUMP No. 1	U/G & EXPOSED	START/STOP, L/R (3#10 SPARE)
C3-101A	8-1/C#14, 1-1/C#12(G)	C3-101A	3/4"	CONTROL	MCC-3	LCP-DTFF	EXPOSED	3#14 SPARE
C3-101B	12-1/C#14, 1-1/C#12(G)	C3-101B	3/4"	CONTROL	MCC-3 (FUEL FORWARDING PUMP No. 1)	BOP-JB-001	EXPOSED	4#14 SPARE
C3-102	1-8/C#10 (7#10, 1#10G)	C3-102	1"	CONTROL	MCC-3	SUMP PUMP	U/G & EXPOSED	LSL/LSH (4#12 SPARE)
C3-102A	8-1/C#14, 1-1/C#12(G)	C3-102A	3/4"	CONTROL	MCC-3 (SUMP PUMP)	BOP-JB-001	EXPOSED	4#14 SPARE
C3-103	2-1/C#12, 1-1/C#12(G)	C3-103	3/4"	120V.	FOAM TANK BOOSTER PUMP VFD	BOOSTER PUMP	U/G & EXPOSED	SPACE HEATER
C5-101	1-8/C#10 (7#10, 1#10G)	C5-101	1"	CONTROL	MCC-G5	FUEL FORWARDING PUMP No. 2	U/G & EXPOSED	START/STOP, L/R (3#10 SPARE)
C5-101A	8-1/C#10, 1-1/C#10(G)	C5-101A	1"	CONTROL	MCC-G5	LCP-DTFF	EXPOSED	3#12 SPARE
C5-101B	12-1/C#14, 1-1/C#12(G)	C5-101B	3/4"	CONTROL	MCC-G5 (FUEL FORWARDING PUMP No. 2)	BOP-JB-001	EXPOSED	4#14 SPARE
CB-101	10-1/C#14, 1-1/C#12(G)	CB-101	3/4"	SIGNAL	OWS LCP-TK-004	FST-MBIO	U/G & EXPOSED	(4#14 SPARE)
CB-101A	8-1/C#14, 1-1/C#12(G)	CB-101A	3/4"	CONTROL	OWS LCP-TK-004	TANK LEVEL SWITCHES	U/G & EXPOSED	(2#14 SPARE) INTRINSICALLY SAFE CIRCUITS
CB-102	6-1/C#14, 1-1/C#12(G)	CB-102	3/4"	SIGNAL	STATIONARY FUEL POLISHER	FST-MBIO	U/G & EXPOSED	(2#14 SPARE)
CB-103	18-1/C#14, 1-1/C#12(G)	CB-103	1"	SIGNAL	FUEL TANKS LCP-TK-001/002	FST-MBIO	U/G & EXPOSED	(6#14 SPARE)
CB-103A	3-TW PR SH #18 AWG	CB-103A	1"	SIGNAL	FUEL TANKS LCP-TK-001/002	FST-MBIO	U/G & EXPOSED	(1 TW PR SH SPARE)
CB-103B	8-1/C#14, 1-1/C#12(G)	CB-103B	3/4"	CONTROL	LCP-TK-001/2	TANK #001 LEVEL SWITCHES	EXPOSED	(2#14 SPARE) INTRINSICALLY SAFE CIRCUITS
CB-103C	1-TW PR SH #18 AWG	CB-103C	3/4"	CONTROL	LCP-TK-001/2	TANK #001 LIT-001	EXPOSED	INTRINSICALLY SAFE CIRCUIT
CB-103D	8-1/C#14, 1-1/C#12(G)	CB-103D	3/4"	CONTROL	LCP-TK-001/2	TANK #002 LEVEL SWITCHES	EXPOSED	(2#14 SPARE) INTRINSICALLY SAFE CIRCUITS
CB-103E	1-TW PR SH #18 AWG	CB-103E	3/4"	CONTROL	LCP-TK-001/2	TANK #002 LIT-002	EXPOSED	INTRINSICALLY SAFE CIRCUIT
CB-104	1-6 STRAND FIBER OPTIC CABLE 62.5 MICRON	CB-104	2"	COMMUNICATION	FUEL TANKS 001/2 PLATFORM (FST-MBIO)	BOP-JB-001	U/G & EXPOSED	LOSE TUBE CONSTRUCTION
CB-105	EMPTY	CB-105	2"	CONTROL	FUEL TANK PLATFORM	BOP-JB-001	U/G & EXPOSED	SPARE
CC-101	10-1/C#14, 1-1/C#12(G)	CC-101	3/4"	SIGNAL	DAY TANK LCP-TK-003	DT-MBIO	U/G & EXPOSED	(4#14 SPARE)
CC-101A	3-TW PR SH #18 AWG	CC-101A	1"	SIGNAL	DAY TANK LCP-TK-003	DT-MBIO	U/G & EXPOSED	(1 TW PR SH SPARE)
CC-101B	2-1/C#12, 1-1/C#12(G)	CC-101B	3/4"	120V. POWER	DAY TANK LCP-TK-003	DT-MBIO	EXPOSED	
CC-101C	8-1/C#14, 1-1/C#12(G)	CC-101C	3/4"	CONTROL	LCP-TK-003	DAY TANK LEVEL SWITCHES	EXPOSED	(2#14 SPARE) INTRINSICALLY SAFE CIRCUITS
CC-101D	1-TW PR SH #18 AWG	CC-101D	3/4"	CONTROL	LCP-TK-003	DAY TANK LE-003	EXPOSED	INTRINSICALLY SAFE CIRCUIT
CC-102	1-6 STRAND FIBER OPTIC CABLE 62.5 MICRON	CC-102	2"	COMMUNICATION	DAY TANK LCP-TK-003 (DT-MBIO)	BOP-JB-001	U/G & EXPOSED	LOSE TUBE CONSTRUCTION
CC-103	5-TW PR SH #18 AWG	CC-103	1¼"	CONTROL	DAY TANK LCP-TK-003	LCP-DTFF	U/G & EXPOSED	1 SPARE

SPECIFIC NOTES:

1. ALL CONDUIT AND WIRE TO BE INSTALLED AS NEW UNDER THIS CONTRACT.
2. FACP & ASSOCIATED CONDUIT/CABLE ARE NOT LISTED ON THIS DWG. SEE DWG. EB-04.
3. TERMINATE CABLE WITH MANUFACTURER'S TERMINATION KITS PER MANUFACTURER'S INSTRUCTIONS.

(A) VFD REPLACED BY FOAM BOOSTER PUMP STARTER VIA RFI-0067

REV.	DATE	AS-BUILT MARKUPS	BY
A	10-25-19	AS-BUILTS ADDED	LHN
1	3-23-15	VFD SPACE HEATER REVISON (ADD.3)	HGH

SEWERAGE AND WATER BOARD OF NEW ORLEANS

CONTRACT NO. 1369

HMGP EMERGENCY FUEL STORAGE RETROFIT POWER PLANT
MAIN WATER PURIFICATION PLANT POWER COMPLEX

CONDUIT & CABLE SCHEDULE

THIS DOCUMENT ORIGINALLY ISSUED AND SEALED BY HENRY G. HAWNEY, LICENCE NO. 19229 ON 2-6-15.

E

Trigon — Quality ▲ Commitment ▲ Client Service

TRIGON DWG. NO. EZ-02

TRIGON ASSOCIATES, LLC
1515 POYDRAS STREET
SUITE 2200
NEW ORLEANS, LA 70112
TEL: 504-585-5767
trig□nass□□lat□s.□□m

DR:	S. CLARK
CK:	H. HAWNEY
AP:	H. HAWNEY
LAST EDIT:	
SCALE:	NOT TO SCALE
DATE:	JANUARY 28, 2015

GENERAL SUPERINTENDENT

DWG. NO. 12098-W8

SET NO: SHEET NO: 60 OF 72

PANEL SCHEDULE

PANEL NAME LA

LOCATION FUEL STORAGE TANK AREA

FOUND ON DWG. NO. -

FED FROM -

AVAILABLE FAULT CURRENT - SYM. AMPS

PANEL AIC RATING 10,000
- ✖ FULLY RATED
- ☐ SERIES RATED FOR ____ KAIC FROM _____

FEEDER _____
- ☐ FEEDER PROTECTED BY OVERCURRENT DEVICE

VOLTAGE
- ☐ 480/277V, 3Ø 4W, WYE
- ✖ 208/120V, 3Ø 4W, WYE
- ☐ 240/120V, 3Ø 4W, DELTA W/BØ "STINGER"

MAINS, 30 AMP
- ✖ FACTORY MAIN CIRCUIT BREAKER
- ☐ SHUNT TRIP MAIN CB
- ☐ MAIN LUGS ONLY
- ☐ UL LISTED FEED-THRU LUGS
- ☐ MAIN FUSIBLE SWITCH, FURNISH FUSES: ≤ 600A, CLASS RK5, >600A, CLASS L, ALL RATED 200,000 AIC
- ✖ LIGHTNING SURGE PROTECTIVE DEVICE (SPD)

NEUTRAL ✖ 100% ☐ 200%

MOUNTING ✖ SURFACE ☐ FLUSH

ENCLOSURE ☐ NEMA1 ☐ NEMA3R ☐ NEMA12 ✖ NEMA4X STAINLESS STEEL
- ☐ LOCKABLE COVER

FEED ☐ TOP ✖ BOTTOM ☐ MOUNT IN MCC

BRANCHES
- ✖ BOLT-ON, PANELBOARD CONSTR.
- ☐ STAB-IN, LOAD CENTER CONSTR.
- ☐ FUSIBLE SWITCHES W/ CLASS R FUSE REJ. CLIPS, FURNISH ALL FUSES, CLASS RK5, 200,000 AIC

PANEL HAS FRONT ACCESS ONLY
ALL COPPER BUSSING
FURNISH COPPER GROUND BAR KIT
- ☐ ALSO FURNISH ADDITIONAL ISOLATED GROUND BAR KIT
- ☐ SERVICE ENTRANCE LABEL
- ✖ PANEL NAMEPLATE, 2"x4" ENGRAVED PLASTIC LAMINATE
  USE 1/4" LETTERING FOR PANEL NAME, ON 1 LINE
  USE 1/8" LETTERING FOR VOLTS, AMPS, WHERE FED FROM, MO./YR. INSTALLED, ON 4 LINES
- ✖ BLACK FIELD, WHITE LETTERS
- ☐ RED FIELD, WHITE LETTERS

CKT. #	# OF POLES	TRIP AMPS	LOAD DESCRIPTION	VOLT-AMPS A	VOLT-AMPS B	VOLT-AMPS C	LTS	REC	MIS	MIS	REC	LTS	VOLT-AMPS A	VOLT-AMPS B	VOLT-AMPS C	LOAD DESCRIPTION	TRIP AMPS	# OF POLES	CKT. #
1	3	20	LIGHTING CONTACTOR "LC"	240									360			STORAGE TANK -002 RECEPTACLES	20	1	2
3					180									180		FUEL POLISHER PLATFORM RECEPTACLE	20	1	4
5						600									360	STORAGE TANK -001 RECEPTACLES	20	1	6
7	1	15	-	-									180			FUEL TRANSFER PLATFORM 1 RECEPTACLE	20	1	8
9	1	15	-		-									180		TRUCK LOADING AREA RECEPTACLE	20	1	10
11	1	15	-			-									-	FUEL TRANSFER PLATFORM (SPARE CKT.)	15	1	12
13	1	15	-	-									-			-	20	1	14
15	1	15	-		-									-		-	20	1	16
17	1	20	FOAM CONCENTRATE TANK RECEPTACLE			-									-	-	20	1	18
19	1	15	FOAM CONCENTRATE TANK (LCP-TK-005)	100									-			SPD	20	3	20
21	1	15	STORAGE TANKS PANEL (LCP-TK-001/002)		100									-					22
23	1	15	OWS PANEL (LCP-TK-004)			100									-				24
			SUBTOTAL ODD SIDE	340	280	700				SUBTOTAL EVEN SIDE			540	360	360				
										SUBTOTAL ODD SIDE			340	280	700				
										TOTAL CONNECTED LOAD			880	640	1060				

= 2.6 KVA

= 7 AMPS

TRIP AMPS = FUSE SIZE IF FUSIBLE SWITCHES

REMARKS:

1. ALL CIRCUITS 2#12, 1#12(G), 3/4"C. UNLESS NOTED OTHERWISE.
2. RUN 3#10, 1#10(N), 1#10(G), 3/4"C. TO ALL LIGHTING LOCATIONS. BALANCE PHASE LOAD AT EACH LOCATION.
3. TERMINATE IN 6"x4"x4" 304SS NEMA 4X ENCLOSURE MOUNTED ON PLATFORM.

LIGHTING FIXTURE SCHEDULE (2)

TYPE	MANUFACTURER & CATALOG No.	DESCRIPTION	LAMP QTY.	TYPE	VOLTS
F1	DIALIGHT # STWWC2N200SW3	AREA LIGHT, EPOXY POWDER COATED COPPER FREE ALUMINUM HOUSING, POLYCARBONATE LENS, NEMA4X, UL1598/A, L70 >100,000 HOURS, FACTORY SEALED, WIDE THROW, CCT=5000K, 4100 LUMENS, POLE MOUNT, THD <15%, 5-YEAR WARRANTY, 2" SLIP FILT STANCHION MOUNT JUNCTION BOX, DIALIGHT CATALOG NO. HZSTAN200S, AND BRACKET MOUNTING HARDWARE DIALIGHT CATALOG NO. HZXW3, 10' ALUMINUM SWIVELPOLE CATALOG NO. ST7-3000-P-AL	-	60W LED	120
F2	DIALIGHT #FLW266NC2NG200S LYTEPOLES # 305-5015-16-T2-SBF	FLOODLIGHT WITH MOUNTING BRACKET, NEMA4X, UL1598/A, (-40°c TO +65°c) 20KV SURGE PROTECTION, THD <15%, PF>0.9, NEMA6 BEAM PATTERN, cri=70, CCT=5000K, L70 RATED >100,000 HOUR AT 25°C, EPOXY POWDER COATED COPPER FREE ALUMINUM HOUSING, TEMPERED GLASS LENS, FACTORY SEALED, 10-YEAR WARRANTY. 2" SLIP-FIT STANCHION MOUNT JUNCTION BOX, DIALIGHT CATALOG NO. HZXSTAN200S, 16' ROUND TAPERED ALUMINUM POLE X 0.188" SATIN FINISH WITH FIXTURE MOUNTING ADAPTER (LYTEPOLES) PHOTOCELL INTERMATIC #LED4536SC WITH REMOTE POLE BRACKET/TWIST-LOCK RECEPTACLE CAT #K122.	-	107W LED	120
F3	DIALIGHT #FLW266NC2NG200S	IDENTICAL TO FIXTURE F2 WITH 10' SWIVEL POLE (SIMILAR TO FIXTURE F1)	-	107W LED	120

LIGHTING FIXTURE SCHEDULE NOTES:

1. ABOVE FIXTURES ARE BASIS OF DESIGN.
2. ALL POLES AND ATTACHED LIGHT FIXTURES TO BE RATED FOR 170 MPH WIND LOADING. SUBMIT DATA FOR ENGINEER APPROVAL.

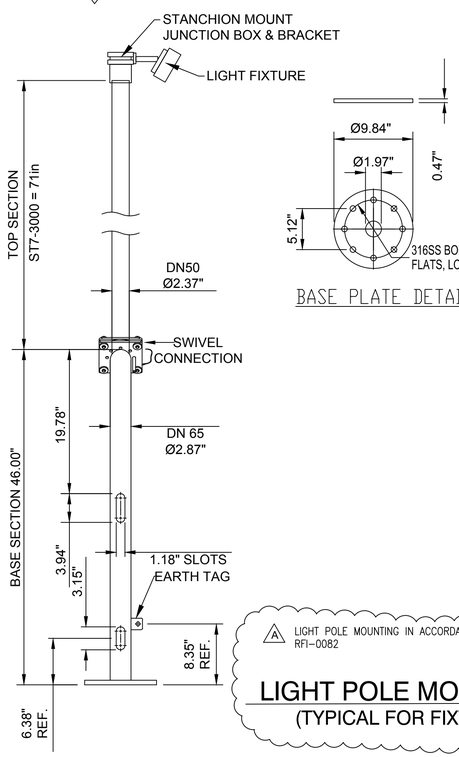

BASE PLATE DETAIL

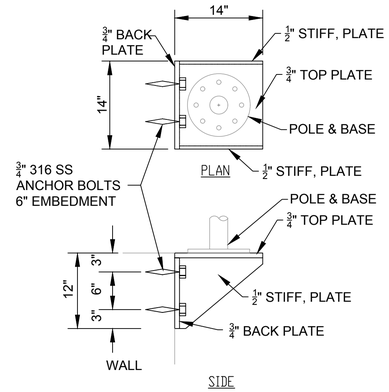

SIDE

WALL MOUNTING BRACKET
(STRUCTURE MOUNT SIMILAR, EXCEPT BOLTED TO STRUCTURE)

NOTES:

1. THE MOUNTING ARRANGEMENT SHOWN IS GENERIC. CONTRACTOR SHALL COORDINATE MOUNTING DETAILS FOR ACTUAL EQUIPMENT SUPPLIEC AND THE SPECIFICS OF EACH MOUNTING LOCATION.
2. HOT DIP GALVANIZED AFTER FABRICATION.

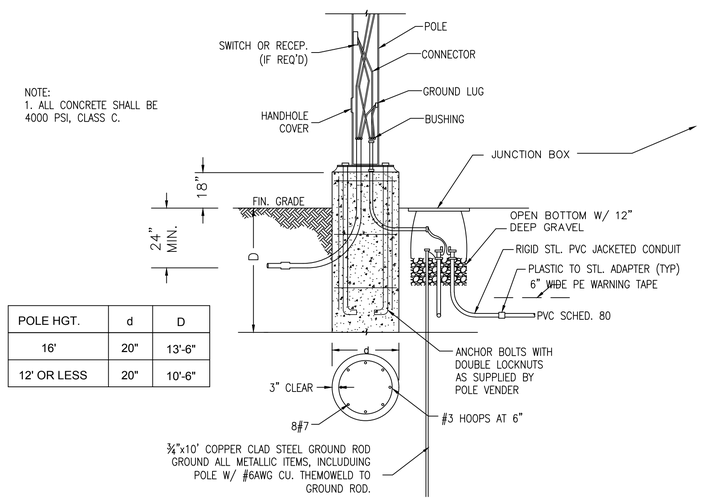

POLE HGT.	d	D
16'	20"	13'-6"
12' OR LESS	20"	10'-6"

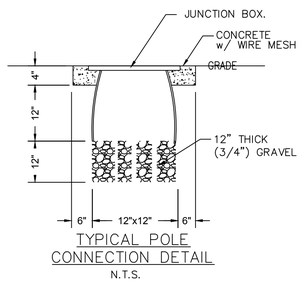

TYPICAL POLE CONNECTION DETAIL
N.T.S.

NOTES:

1. FOR LIGHTS MOUNTED ON ELEVATED STRUCTURES (NEW OR EXISTING), PROVIDE A FABRICATED BASE PLATE FOR POLE MOUNTING. UNIT SHALL BE BOLTED IN PLACE IN FIELD. ASSEMBLY SHALL BE HOT DIPPED GALVANIZED AFTER FABRICATION. THE ENTIRE ASSEMBLED STRUCTURE SHALL BE RATED FOR 150MPH WIND LOAD ON POLE AND FIXTURE.

LIGHT POLE MOUNTING AT GRADE ELEVATION
(TYPICAL FOR FIXTURE F2)
N.T.S.

A LIGHT POLE MOUNTING IN ACCORDANCE WITH RFI-0081 AND RFI-0082

LIGHT POLE MOUNTING
(TYPICAL FOR FIXTURE F1)
N.T.S.

REV.	DATE		BY
A	10-25-19	AS-BUILT MARKUPS	LHN

SEWERAGE AND WATER BOARD OF NEW ORLEANS

CONTRACT No. 1369

HMGP EMERGENCY FUEL STORAGE RETROFIT POWER PLANT
MAIN WATER PURIFICATION PLANT POWER COMPLEX

PANEL SCHEDULE & LIGHT FIXTURE SCHEDULE

THIS DOCUMENT ORIGINALLY ISSUED AND SEALED BY HENRY G. HAWNEY, LICENCE No. 19229 ON 2-6-15.

E

Trigon — Quality ▲ Commitment ▲ Client Service

TRIGON DWG. NO. EZ-03

TRIGON ASSOCIATES, LLC
1515 POYDRAS STREET
SUITE 2200
NEW ORLEANS, LA 70112
TEL: 504-585-5767
trigonassociates.com

DR: S. CLARK
CK: H. HAWNEY
AP: H. HAWNEY
LAST EDIT:
SCALE: NOT TO SCALE
DATE: JANUARY 28, 2015

GENERAL SUPERINTENDENT

DWG. No. 12098-W8

SET NO: SHEET NO: 61 OF 72

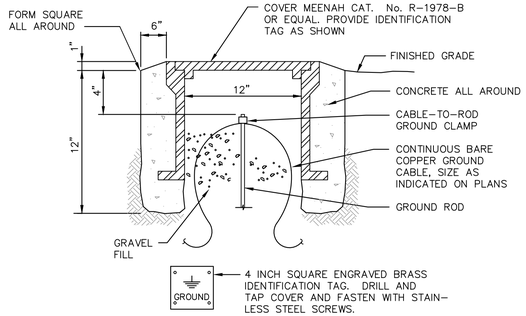

TYPICAL GROUND TEST WELL DETAIL

N.T.S.

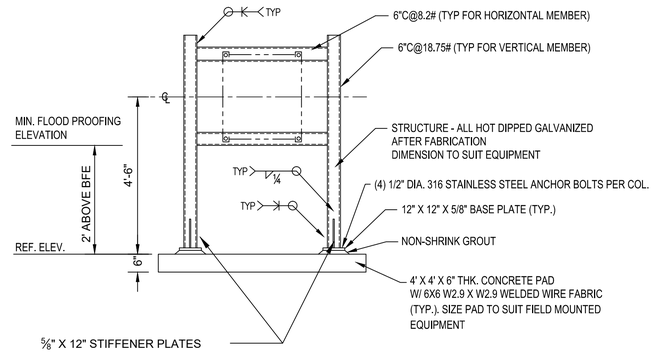

ENCLOSURE MOUNTING RACK - OUTDOOR DETAIL

N.T.S.

WELDING NOTES:

1. ALL PRIMARY MEMBERS SHALL HAVE FULL PENETRATION WELDS.
2. ALL SECONDARY MEMBERS SUCH AS PLATES AND STIFFENERS SHALL BE 1/4" FILLET WELDS MINIMUM.

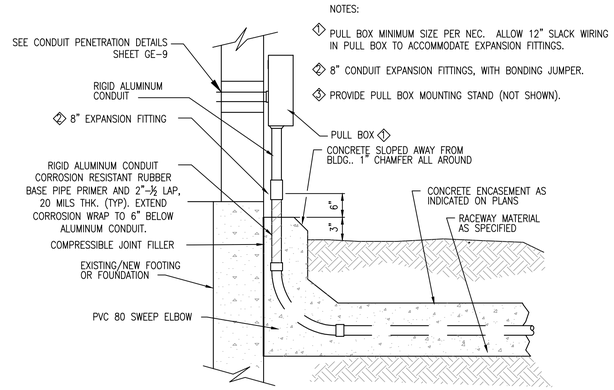

ABOVE GROUND CONDUIT TERMINATION DETAIL

REQUIRED ON ALL CONDUITS EMERGING FROM U/G

N.T.S.

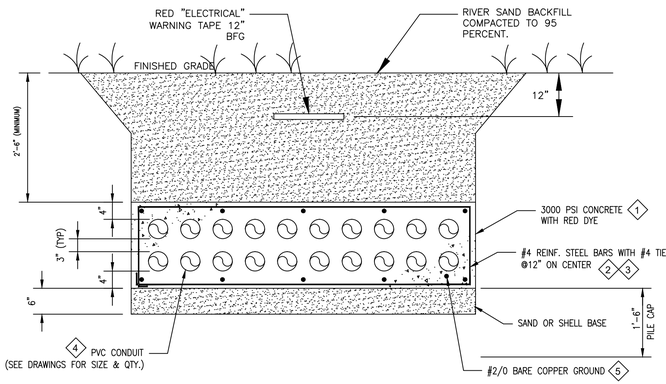

DUCT BANK NOTES:

1. DUCT BANK RED THROUGHOUT. MIX 8# RED DYE PER CUBIC YARD CONCRETE.
2. REINFORCEMENT STEEL 60KSI. 4 #4 CONTINUOUS FOR 1 CONDUIT, 6 #4 FOR 2 CONDUITS. ADD 2 MORE #4 CONTINUOUS FOR EACH ADDITIONAL 7" OF DUCTBANK WIDTH.
3. MINIMUM 3" CONCRETE COVER ON REINFORCEMENT STEEL.
4. POWER & FIBER OPTIC CABLES: 6" SEPARATION.
   13.8kV & SHIELDED SIGNAL CABLE: 24" SEPARATION.
   480V VFD & CONTROL OR SHIELDED CABLE 18" SEPARATION.
   480V. & SHIELDED SIGNAL CABLE: 15" SEPARATION.
   2080V. & SHIELDED SIGNAL CABLE: 6" SEPARATION.
5. ATTACH TO GROUND BUS AT BOTH ENDS OF DUCT BANK RUN.

DUCTBANK SECTION INPLANT INSTALLATION 1 (TYP)

N.T.S.

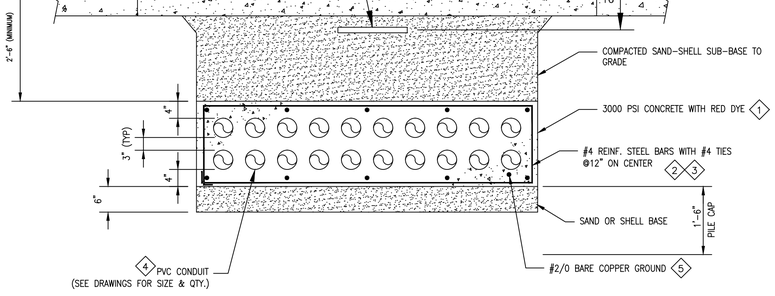

DUCT BANK NOTES:

1. DUCT BANK RED THROUGHOUT. MIX 8# RED DYE PER CUBIC YARD CONCRETE.
2. REINFORCEMENT STEEL 60KSI. 4 #4 CONTINUOUS FOR 1 CONDUIT, 6 #4 FOR 2 CONDUITS. ADD 2 MORE #4 CONTINUOUS FOR EACH ADDITIONAL 7" OF DUCTBANK WIDTH.
3. MINIMUM 3" CONCRETE COVER ON REINFORCEMENT STEEL.
4. POWER & FIBER OPTIC CABLES: 6" SEPARATION.
   13.8kV & SHIELDED SIGNAL CABLE: 24" SEPARATION.
   480V VED & CONTROL OR SHIELDED CABLE 18" SEPARATION.
   480V. & SHIELDED SIGNAL CABLE: 15" SEPARATION.
   2080V. & SHIELDED SIGNAL CABLE: 6" SEPARATION.
5. ATTACH TO GROUND BUS AT BOTH ENDS OF DUCT BANK RUN.

DUCTBANK SECTION INPLANT INSTALLATION 2 (TYP)

N.T.S.

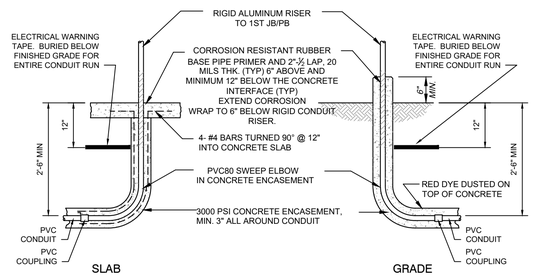

CONDUIT RISERS DETAIL

N.T.S.

A AS-BUILT REVISIONS NOT PROVIDED FOR THIS SHEET BY THE CONTRACTOR

THIS DOCUMENT ORIGINALLY ISSUED AND SEALED BY HENRY G. HAWNEY, LICENCE N□ 19229 ON 2-6-15.

E

Trigon
Quality ▲ Commitment ▲ Client Service

TRIGON DWG. NO. EZ-04

TRIGON ASSOCIATES, LLC
1515 POYDRAS STREET
SUITE 2200
NEW ORLEANS, LA 70112
TEL: 504-585-5767
trig□nass□iat□s.□m

REV.	DATE	AS-BUILT MARKUPS	BY
A	10-25-19	AS-BUILT MARKUPS	LHN

SEWERAGE AND WATER BOARD OF NEW ORLEANS

CONTRACT N□ 1369

HMGP EMERGENCY FUEL STORAGE RETROFIT POWER PLANT
MAIN WATER PURIFICATION PLANT POWER COMPLEX

ELECTRICAL DETAILS SHEET 1

DR:	S. CLARK
CK:	H. HAWNEY
AP:	H. HAWNEY
LAST EDIT:	
SCALE:	NOT TO SCALE
DATE:	JANUARY 28, 2015

GENERAL SUPERINTENDENT

DWG. N□. 12098-W8

SET NO: SHEET NO: 62 OF 72

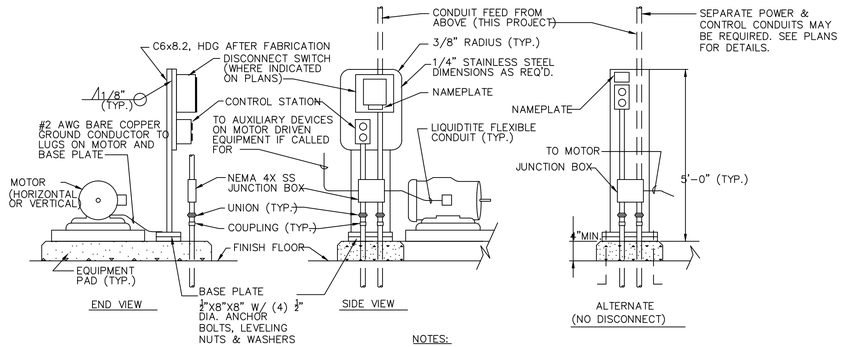

NOTES:

1. MOUNTING STAND MAY BE OMITTED IF MOTOR IS LOCATED WITHIN 5'-0" OF A WALL OR HANDRAIL, IN WHICH CASE THE DISCONNECT AND CONTROL STATION SHALL BE MOUNTED ON THE WALL OR HANDRAIL.

2. DO NOT INSTALL MOUNTING STAND SO AS TO OBSTRUCT THE REMOVAL OF THE MOTOR OR DRIVEN EQUIPMENT FOR MAINTENANCE OR REPAIR.

TYPICAL MOTOR INSTALLATION

NOT TO SCALE

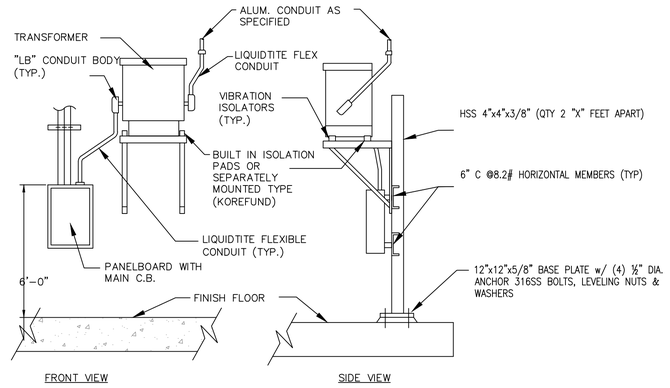

TYPICAL LIGHTING PANEL INSTALLATION DETAIL

NOT TO SCALE

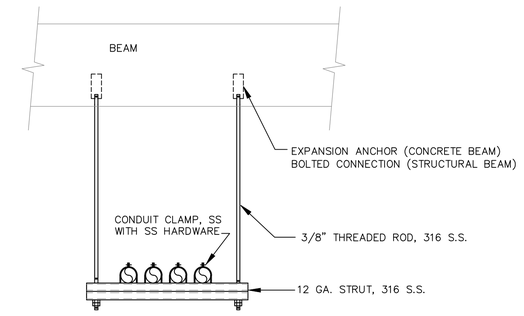

TYPICAL INTERIOR CONDUIT SUPPORT DETAIL

NOT TO SCALE

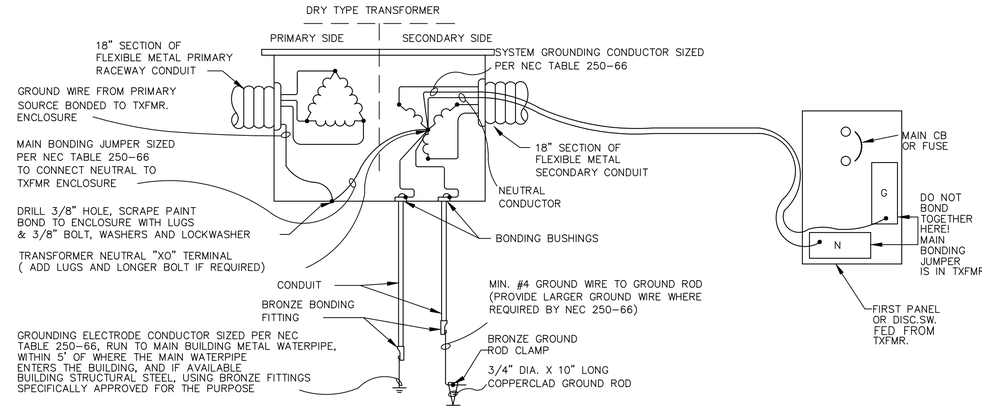

TYPICAL TRANSFOMER GROUNDING DETAIL

NOT TO SCALE

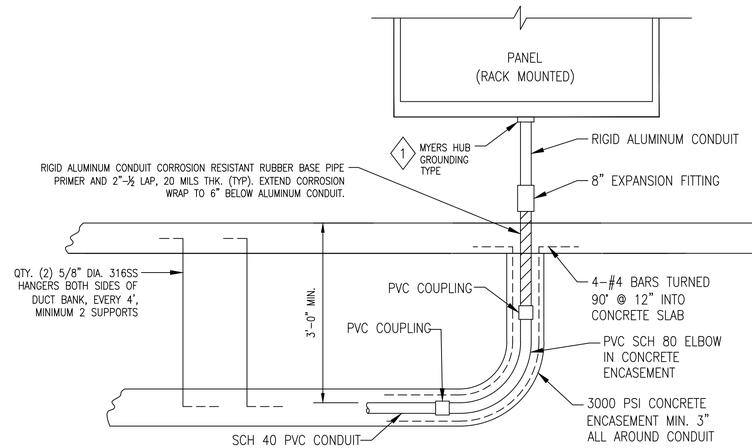

NOTES:

1. BOND ALL HUBS TO ENCLOSURE WITH SAME SIZE WIRE AS EQUIPMENT GROUNDING CONDUCTOR (EGC), WHERE THE HUB FITTING IS THE ENCLOSURE BOND, LOOP EGC THROUGH MYERS HUB GROUND LUG BEFORE TERMINATING ON GROUND BUS.
2. 3/8"ø, 316SS PIPE HANGER EVERY 4'. MIN. 2 PER CONDUIT RUN.

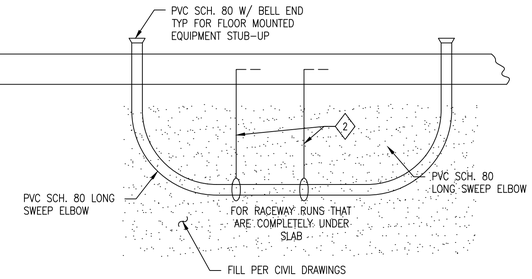

CONDUIT RISER - UNDER SLAB

NOT TO SCALE

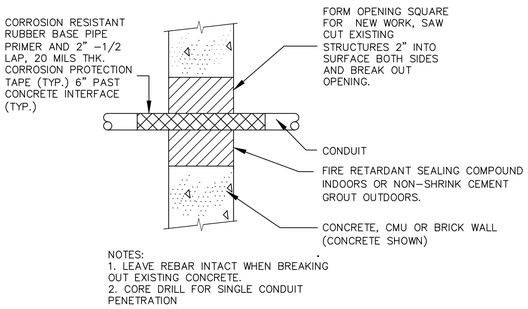

NOTES:
1. LEAVE REBAR INTACT WHEN BREAKING OUT EXISTING CONCRETE.
2. CORE DRILL FOR SINGLE CONDUIT PENETRATION

TYPICAL CONDUIT PENETRATION DETAIL
(Block Or Concrete Wall Or Floor)

NOT TO SCALE

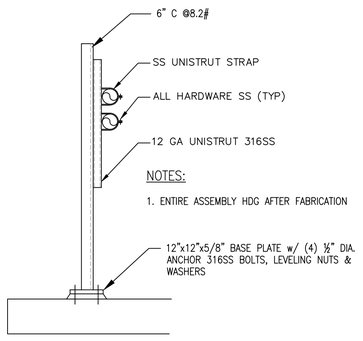

NOTES:

1. ENTIRE ASSEMBLY HDG AFTER FABRICATION

TYPICAL CONDUIT SUPPORT DETAIL

NOT TO SCALE

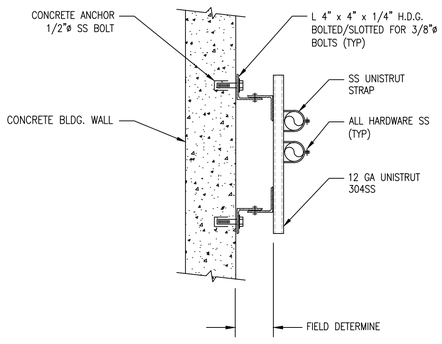

TYPICAL CONDUIT SUPPORT AT WALLS

NOT TO SCALE

A AS-BUILT REVISIONS NOT PROVIDED FOR THIS SHEET BY THE CONTRACTOR.

THIS DOCUMENT ORIGINALLY ISSUED AND SEALED BY HENRY G. HAWNEY, LICENCE N□ 19229 ON 2-6-15.

REV.	DATE		BY
A	10-25-19	AS-BUILD MARKUPS	LHN

SEWERAGE AND WATER BOARD OF NEW ORLEANS

CONTRACT N□ 1369

HMGP EMERGENCY FUEL STORAGE RETROFIT POWER PLANT
MAIN WATER PURIFICATION PLANT POWER COMPLEX

ELECTRICAL DETAILS SHEET 2

E

Trigon
Quality ▲ Commitment ▲ Client Service

TRIGON DWG. NO. EZ-05

TRIGON ASSOCIATES, LLC
1515 POYDRAS STREET
SUITE 2200
NEW ORLEANS, LA 70112
TEL: 504-585-5767
trig□nass□□iat□s.□□m

DR:	S. CLARK
CK:	H. HAWNEY
AP:	H. HAWNEY
LAST EDIT:	
SCALE:	NOT TO SCALE
DATE:	JANUARY 28, 2015

GENERAL SUPERINTENDENT

DWG. N□ 12098-W8

SET NO: SHEET NO: 63 OF 72

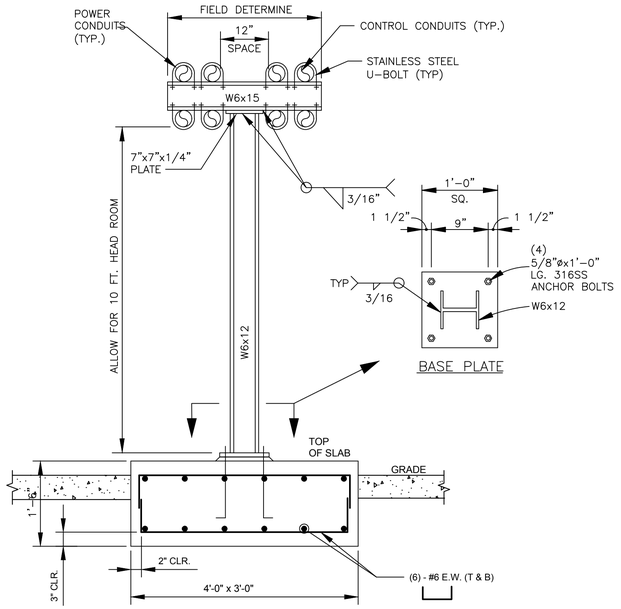

FABRICATION NOTES:

1. ALL STRUCTURAL STEEL, PLATES AND STRUCTURAL MEMBERS SHALL BE FABRICATED FROM A36 STEEL, AND SHALL BE HOT DIP GALVANIZED AFTER FABRICATION.

2. PROVIDE LEVELING NUTS AND FILL WITH NON SHRINK GROUT BETWEEN PLATE AND CONCRETE.

3. ABOVE DETAIL SHOWS CONDUITS SUPPORTED FROM ONE(1) VERTICAL W BEAM. WHERE ADDITIONAL SPACE IS REQUIRED, CONTRACTOR SHALL PROVIDE TWO (2) VERTICAL W BEAMS WITH AN ATTACHED HORIZONTAL BEAM. DUE TO PLANT SPACE AVAILABLE, CONTRACTOR SHALL CO-ORDINATE ROUTING, MOUNTING LOCATIONS, ETC. WITH ALL OTHER TRADES. CONTRACTOR SHALL MODIFY TO SUIT FIELD INSTALLATION CONDITIONS.

4. RACEWAY SEPARATION:
TO AVOID INTERFERENCE, KEEP A SEPARATION DISTANCE BETWEEN POWER RACEWAYS AND RACEWAYS FOR CONTROL/SIGNAL/COMMUNICATION
480V VFD RACEWAY – 18" SEPARATION
480V LINEAR POWER RACEWAY – 15" SEPARATION

OVERHEAD RACEWAY PIPE RACK - SUPPORT DETAIL

NOT TO SCALE

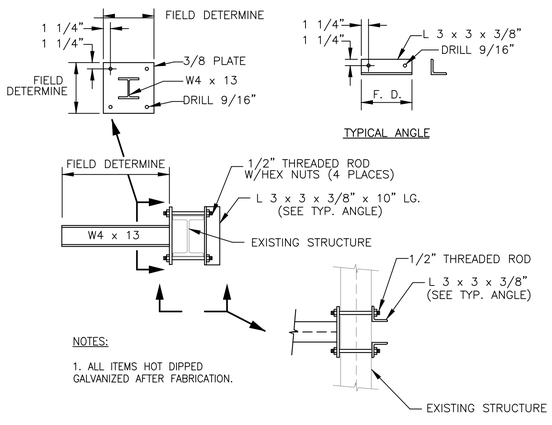

NOTES:

1. ALL ITEMS HOT DIPPED GALVANIZED AFTER FABRICATION.

TYPICAL CONDUIT SUPPORT DETAILS

NOT TO SCALE

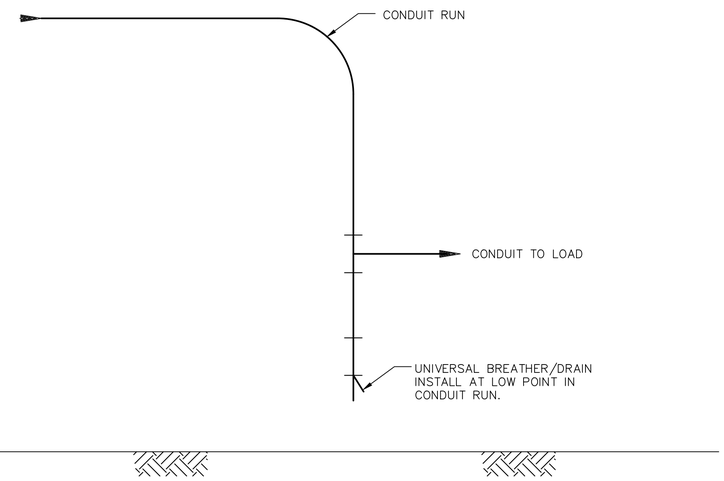

CONDUIT INSTALLATION - LOW POINT

NOT TO SCALE

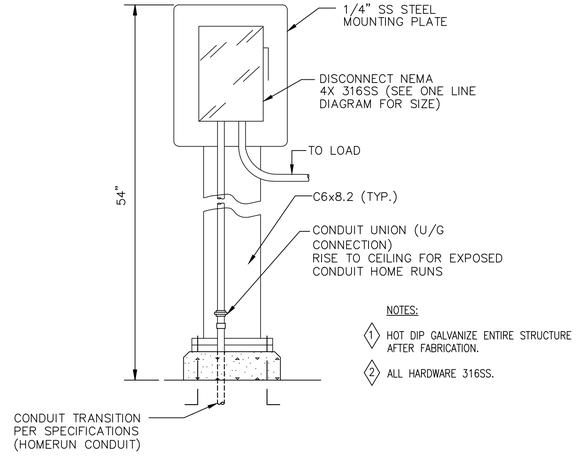

NOTES:

1. HOT DIP GALVANIZE ENTIRE STRUCTURE AFTER FABRICATION.
2. ALL HARDWARE 316SS.

TYPICAL DISCONNECT SWITCH MOUNTING STAND DETAIL

NOT TO SCALE

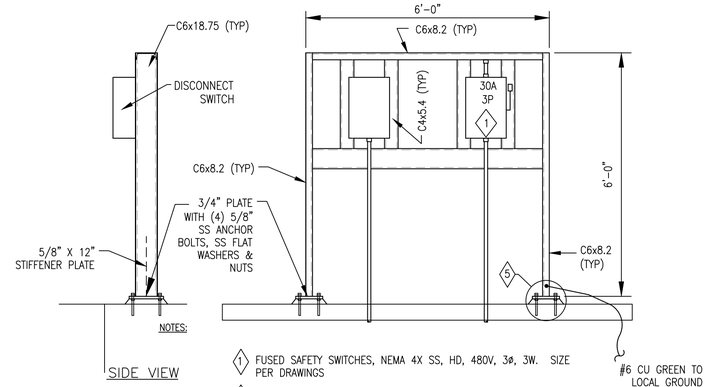

NOTES:

1. FUSED SAFETY SWITCHES, NEMA 4X SS, HD, 480V, 3ø, 3W. SIZE PER DRAWINGS
2. HOT DIP GALVANIZE ENTIRE STRUCTURE AFTER FABRICATION.
3. ALL HARDWARE 316SS.
4. COORDINATE RACK MOUNTING DETAIL WITH MOUNTING LOCATION
5. USE EXISTING STRUCTURE IF AVAILABLE. OTHERWISE PROVIDE 8" HIGH 4000 PSI CONCRETE PAD (MIN 4" ABOVE GRADE) WITH #3 REBAR EACH WAY AT 12" CENTERS AND 4x4-4/4 WIRE MESH. PAD SIZE TO ACCOMODATE RACK & MIN. 4' CLEAR SPACE IN FRONT OF RACK. EXTEND PAD MIN. 12" BEYOND EACH SIDE OF RACK.

TYPICAL EQUIPMENT RACK MOUNTING DETAIL

NOT TO SCALE

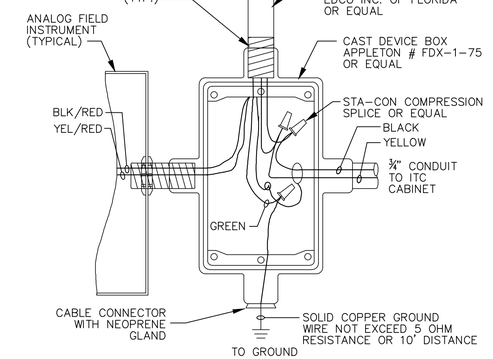

TYPICAL LIGHTNING SURGE SUPPRESSOR DEVICE (SPD) INSTALLATION

N.T.S.

REV.	DATE	AS-BUILT MARKUPS	BY
A	10-25-19	AS-BUILT MARKUPS	LHN

SEWERAGE AND WATER BOARD OF NEW ORLEANS

CONTRACT No. 1369

HMGP EMERGENCY FUEL STORAGE RETROFIT POWER PLANT
MAIN WATER PURIFICATION PLANT POWER COMPLEX

A AS-BUILT REVISIONS NOT PROVIDED FOR THIS SHEET BY THE CONTRACTOR

THIS DOCUMENT ORIGINALLY ISSUED AND SEALED BY HENRY G. HAWNEY, LICENCE No. 19229 ON 2-6-15.

ELECTRICAL DETAILS SHEET 3

E

Trigon — Quality ▲ Commitment ▲ Client Service

TRIGON DWG. NO. EZ-06

TRIGON ASSOCIATES, LLC
1515 POYDRAS STREET
SUITE 2200
NEW ORLEANS, LA 70112
TEL: 504-585-5767
trigonassociates.com

DR:	S. CLARK
CK:	H. HAWNEY
AP:	H. HAWNEY
LAST EDIT:	
SCALE:	NOT TO SCALE
DATE:	JANUARY 28, 2015

GENERAL SUPERINTENDENT

DWG. No. 12098-W8

SET NO: SHEET NO: 64 OF 72

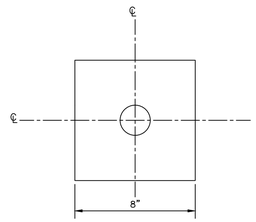

PLAN

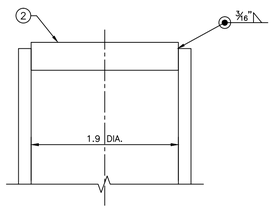

DETAIL "A"

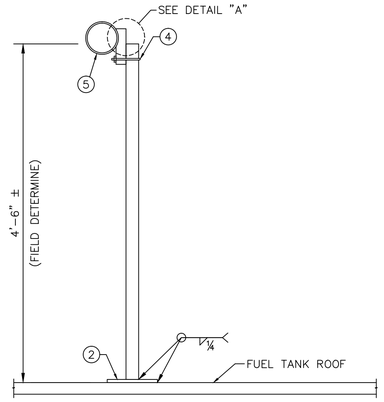

NO.	QTY.	DESRIPTION
1	6'	2" SCHEDULE 80 PIPE, HOT DIPPED GALVANIZED
2	AR	PLATE, HOT DIPPED GALVANIZED
3	4	NOT USED
4	1	MTG BRACKET SUPPLIED BY INST. VENDOR
5	1	TRANSMITTER

NOTES:

1. FIELD WELD TO FUEL TANK ROOF (TK-001, -002)

TYPICAL FLOOR MOUNT, MULTIPLE OR SINGLE INSTRUMENT

(TYPICAL FOR FACP - UVIR)

N.T.S.

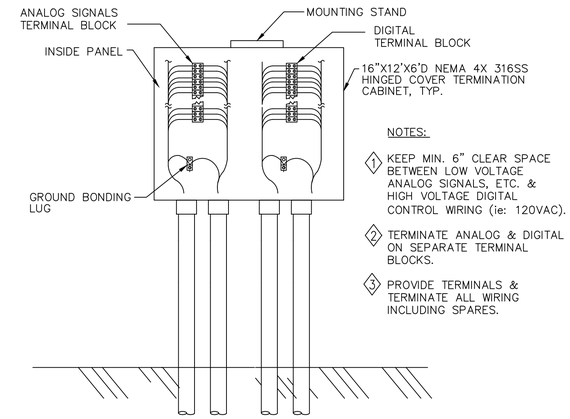

NOTES:

1. KEEP MIN. 6" CLEAR SPACE BETWEEN LOW VOLTAGE ANALOG SIGNALS, ETC. & HIGH VOLTAGE DIGITAL CONTROL WIRING (ie: 120VAC).
2. TERMINATE ANALOG & DIGITAL ON SEPARATE TERMINAL BLOCKS.
3. PROVIDE TERMINALS & TERMINATE ALL WIRING INCLUDING SPARES.

FIELD TERMINATION CABINET (TC) OR JUNCTION BOX

N.T.S.

NOTE: FLOOR MOUNTING RACK NOT SHOWN BUT REQUIRED.

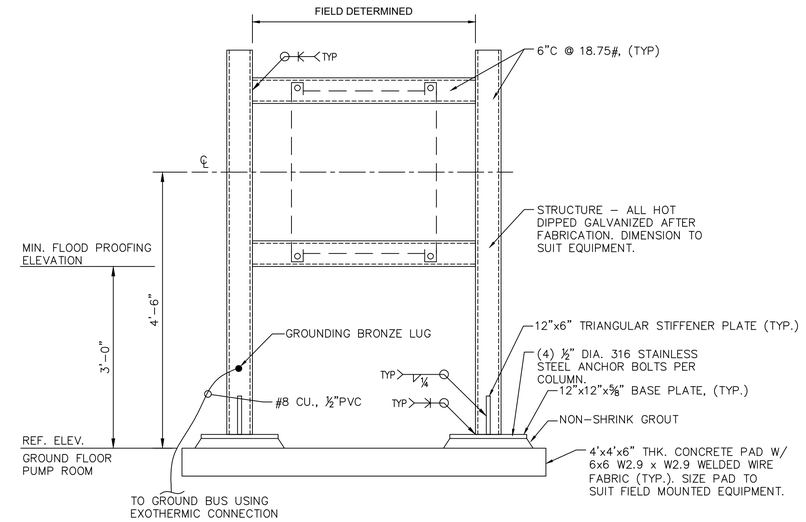

TYPICAL FIELD CONTROL PANEL - MOUNTING DETAIL

(TYPICAL FOR MISC. PANELS, ETC.)

N.T.S.

WELDING NOTES:

1. ALL PRIMARY MEMBERS SHALL HAVE FULL PENETRATION WELDS.
2. ALL SECONDARY MEMBERS SUCH AS PLATES AND STIFFENERS SHALL BE 1/4" FILLET WELDS MINIMUM.

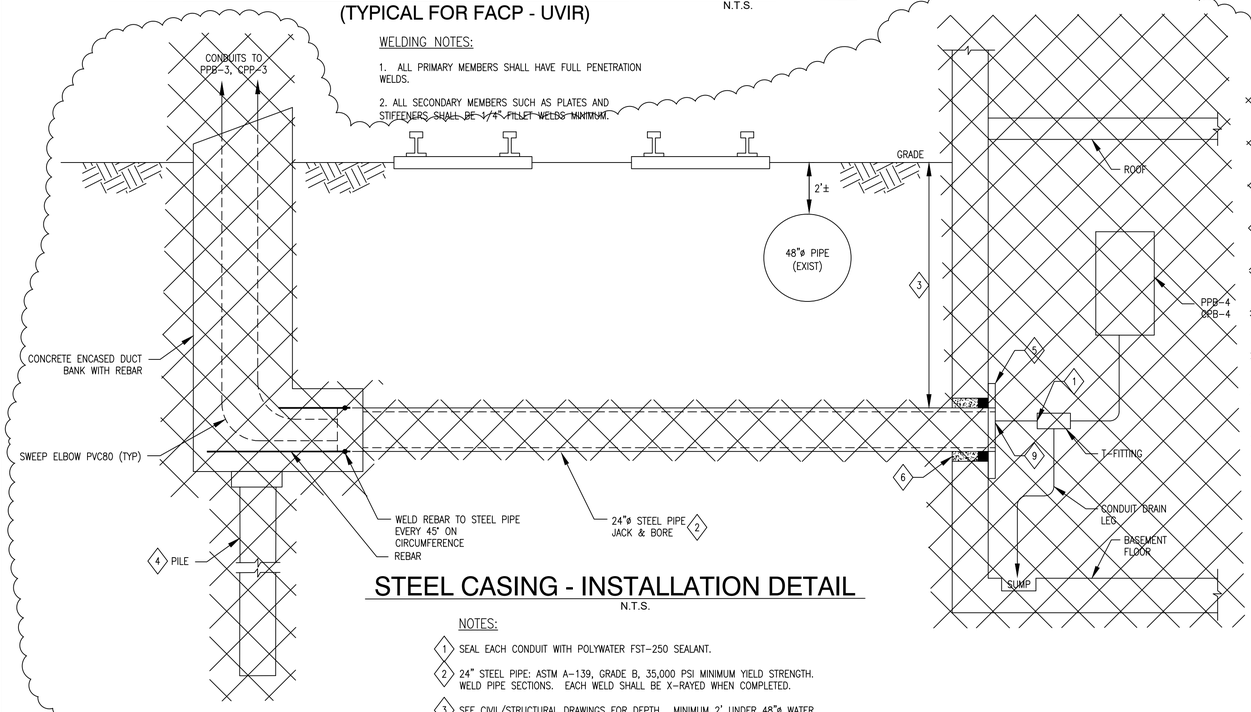

STEEL CASING - INSTALLATION DETAIL

N.T.S.

NOTES:

1. SEAL EACH CONDUIT WITH POLYWATER FST-250 SEALANT.
2. 24" STEEL PIPE: ASTM A-139, GRADE B, 35,000 PSI MINIMUM YIELD STRENGTH. WELD PIPE SECTIONS. EACH WELD SHALL BE X-RAYED WHEN COMPLETED.
3. SEE CIVIL/STRUCTURAL DRAWINGS FOR DEPTH. MINIMUM 2' UNDER 48"ø WATER MAIN.
4. SEE CIVIL/STRUCTURAL DRAWINGS FOR PILE.
5. LINK SEAL FITTING: 316SS.
6. FILL WITH NON-SHRINK CEMENT GROUT.
7. SEE CIVIL/STRUCTURAL DRAWINGS FOR INSTALLATION DETAILS.
8. SEE CIVIL/STRUCTURAL SPECIFICATIONS FOR JACK & BORE SPECIFICATION.
9. PROVIDE A CLOSURE PLATE (⅜" THICK) ON THE 24" PIPE (NOT SHOWN ON ABOVE DETAIL). PROVIDE OPENINGS FOR CONDUITS. ALL OPENINGS SHALL BE SEALED TO PREVENT WATER LEAKAGE INGRESS. SUBMIT CONSTRUCTION DETAILS TO ENGINEER.

A JACK AND BORE REPLACED WITH OPEN CUT PER FCO-009/RFQ-001

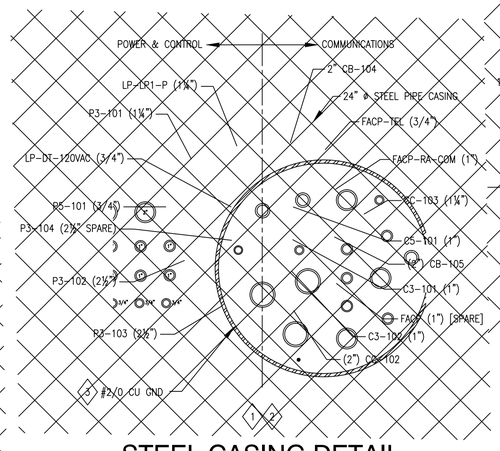

STEEL CASING DETAIL

SCALE: 1½"=1'-0"

NOTES:

1. PROVIDE CONDUIT SPACERS AT 5' INTERVALS. MAINTAIN 3" SEPARATION BETWEEN POWER CONDUITS AND 2" SEPARATION BETWEEN CONTROL CONDUITS.
2. CONDUITS SHALL MAINTAIN THE SAME POSITION ENTERING AND LEAVING THE CASING. AFTER THE CONDUITS ARE IN PLACE, A SAND/CEMENT SLURRY (MINIMUM OF SIX SACKS OF CEMENT PER CUBIC YARD) SHALL BE USED TO FILL ALL VOIDS.
3. BOND GROUND WIRE AT BOTH ENDS TO PROVIDE GROUND CONTINUITY FROM SOURCE TO LOAD.

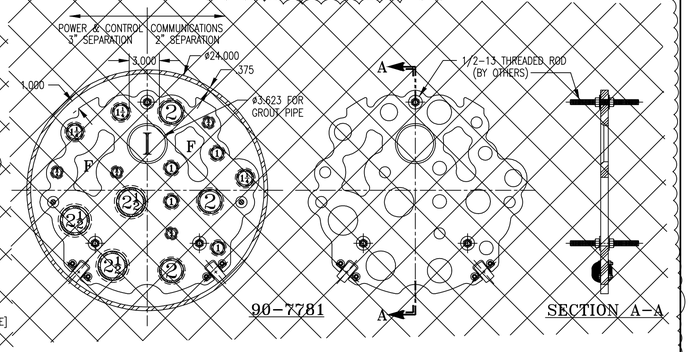

CASING INSERT DETAIL

SCALE: NONE

REV.	DATE	AS-BUILT MARKUPS	BY
A	10-25-19	AS-BUILT MARKUPS	LHN

SEWERAGE AND WATER BOARD OF NEW ORLEANS

CONTRACT N□ 1369

HMGP EMERGENCY FUEL STORAGE
RETROFIT POWER PLANT
MAIN WATER PURIFICATION PLANT POWER COMPLEX

ELECTRICAL DETAILS SHEET 4

THIS DOCUMENT ORIGINALLY ISSUED AND SEALED BY HENRY G. HAWNEY, LICENCE N□ 19229 ON 2-6-15.

E

Trigon
Quality ▲ Commitment ▲ Client Service

TRIGON DWG. NO. EZ-07

TRIGON ASSOCIATES, LLC
1515 POYDRAS STREET
SUITE 2200
NEW ORLEANS, LA 70112
TEL: 504-585-5767
trig□nass□iat□s.□□m

DR:	S. CLARK
CK:	H. HAWNEY
AP:	H. HAWNEY
LAST EDIT:	
SCALE:	NOT TO SCALE
DATE:	JANUARY 28, 2015

GENERAL SUPERINTENDENT

DWG. N□ 12098-W8

SET NO: SHEET NO: 65 OF 72

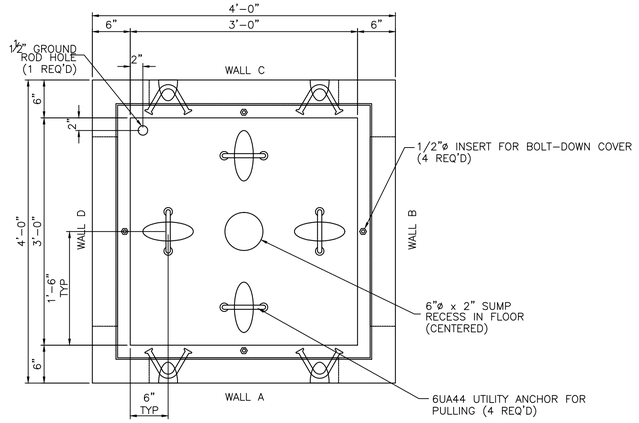

PLAN VIEW
SCALE: 1 1/2" = 1'-0"

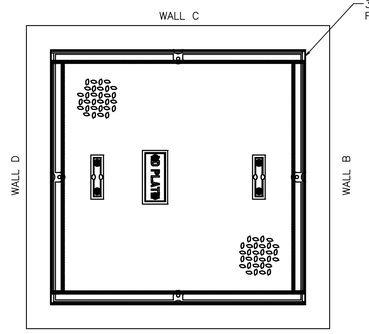

PLAN VIEW W/ FRAME & COVER
SCALE: 1 1/2" = 1'-0"

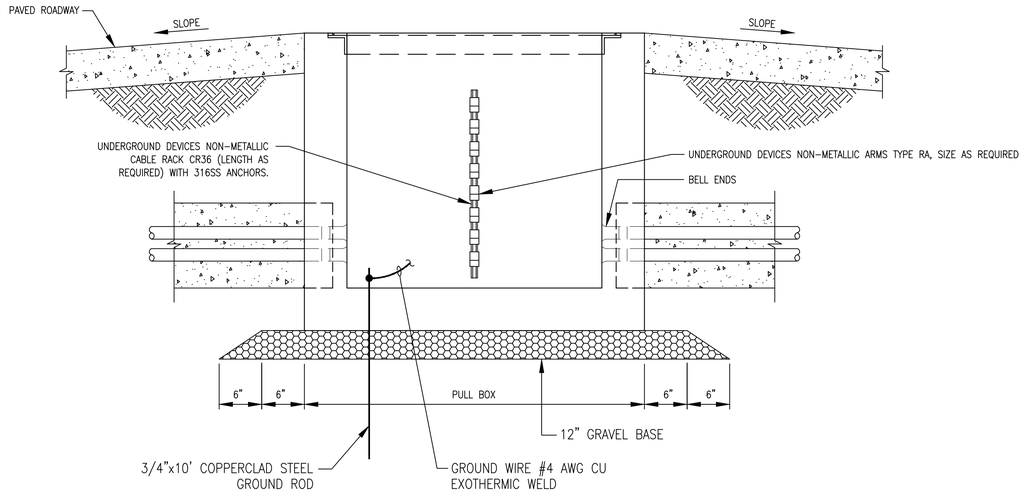

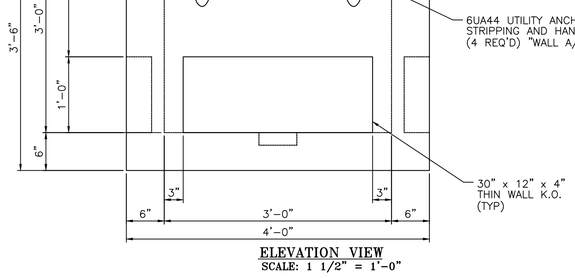

ELEVATION VIEW
SCALE: 1 1/2" = 1'-0"

GENERAL NOTES:

DESIGN LOAD : AASHTO H-20-44, CONTINOUS TRAFFIC (FULL H-20).

STRUCTURAL CONCRETE : CONCRETE SHALL BE 6000 PSI MIN. CEMENT SHALL BE ASTM C150.

REINFORCING STEEL : REINFORCING STEEL SHALL BE ASTM A-615 GRADE 60UNLESS OTHERWISE NOTED. DIMENSIONS FOR FABRICATED REINFORCING STEEL ARE OUT TO OUT. ALL OTHER DIMENSIONS RELATING TO REINFORCING STEEL ARE TO BAR CENTERS UNLESS OTHERWISE NOTED.

FINISH OF CONCRETE : BOTTOM OF BASE SHALL BE A STEEL TROWEL FINISH . ALL OTHER SURFACES SHALL BE AN INDUSTRIAL FORM FINISH .

NOTES:

1. SEE PLAN DRAWINGS FOR ORIENTATION OF DUCTS ENTERING PULL BOX. PROVIDE A PULLING-IN IRON OPPOSITE EACH SIDE IN WHICH DUCTS ENTER.

2. NUMBER OF NON-METALLIC ARMS AND EXACT LOCATION OF RACKS SHALL BE AS REQUIRED FOR NUMBER OF FEEDERS IN PULL BOX. (MINIMUM OF 4 RACKS SHALL BE PROVIDED IN EACH PULL BOX.)

3. BOND ALL METAL INCLUDING COVER, PULLING IRONS & FRAME TO GROUND RODS WITH #4 B.C. BOND TO DUCT BANK GROUND WIRE.

4. WHERE CABLE PULL BOX ENTRY AND EXIT POINTS ARE AT RIGHT ANGLES TO ONE ANOTHER, THE CABLES SHALL RUN AROUND THE INSIDE PULL BOX PERIMETER, AND BE NEATLY TIED AND STRAPPED TO THE SUPPORTING ARMS. WHERE CABLE PULL BOX ENTRY AND EXIT POINTS ARE IN THE SAME HORIZONTAL PLANE, THE CABLES SHALL BE RUN ON THE PULL BOX PERIMETER WALL, AND BE NEATLY TIED AND STRAPPED TO THE SUPPORTING ARMS.

5. THIS STRUCTURE SHALL BE DESIGNED AT THE CONTRACTOR'S EXPENSE BY A PROFESSIONAL ENGINEER REGISTERED IN THE STATE OF LOUISIANA. STRUCTURAL SIGN & SEAL CALCULATIONS & DESIGN DETAILS. SUBMIT FOR ENGINEER APPROVAL.

PPB-1, PPB-2 – 36"x36"x36"
CPB-1, CPB-2 – 36"x36"x36"

PRECAST IN-GROUND PULL BOX (TYP)

NOTES:

1. COVER TO BE INSCRIBED "ELECTRIC POWER" OR "ELECTRIC CONTROL".

REV.	DATE	AS-BUILT MARKUPS	BY
A	10-25-19	AS-BUILT MARKUPS	LHN

AS-BUILT REVISIONS NOT PROVIDED FOR THIS SHEET BY THE CONTRACTOR

THIS DOCUMENT ORIGINALLY ISSUED AND SEALED BY HENRY G. HAWNEY, LICENCE N□ 19229 ON 2-6-15.

SEWERAGE AND WATER BOARD OF NEW ORLEANS

CONTRACT N□ 1369

HMGP EMERGENCY FUEL STORAGE
RETROFIT POWER PLANT
MAIN WATER PURIFICATION PLANT POWER COMPLEX

ELECTRICAL DETAILS
SHEET 5

E

Trigon
Quality ▲ Commitment ▲ Client Service

TRIGON DWG. NO. EZ-08

TRIGON ASSOCIATES, LLC
1515 POYDRAS STREET
SUITE 2200
NEW ORLEANS, LA 70112
TEL: 504-585-5767
trig□nass□□iat□s.□□m

DR: S. CLARK
CK: H. HAWNEY
AP: H. HAWNEY
LAST EDIT:
SCALE: NOT TO SCALE
DATE: JANUARY 28, 2015

GENERAL SUPERINTENDENT

DWG. N□. 12098-W8

SET NO: SHEET NO: 66 OF 72

INSTRUMENT VALVE DESIGNATIONS

	BV	BALL VALVE
	GV	GATE VALVE
	NV	NEEDLE VALVE
	CV	CHECK VALVE
	BFV	BUTTERFLY VALVE
TP		TEST POINT
S / DV		SOLENOID DELUGE VALVE
WPBV		WATER POWERED BALL VALVE
		REDUCED PRESSURE BACKFLOW PREVENTER
	NO	NORMALLY OPEN
	NC	NORMALLY CLOSED

PIPE AND FITTING SYMBOLS

	REDUCER
	QUICK CONNECT COUPLING

MISCELLANEOUS EQUIPMENT DESIGNATIONS

VENT
FOAM CHAMBER
INSECT SCREEN
STROBE/HORN
SIGHT GAUGE
RATIO CONTROLLER
MANWAY
BOOSTER PUMP
FILTER
POSITIVE DISPLACEMENT PUMP

INSTRUMENTATION SYMBOLS

XX / XX	HS	HORN STROBE
XX / XX	LAH	LEVEL ALARM HIGH
HS	LAHH	LEVEL ALARM HIGH HIGH
	LAL	LEVEL ALARM LOW
XX	LALL	LEVEL ALARM LOW LOW
	LAX	LEAK DETECTION
XX	LG	LEVEL GAUGE
	LI	LEVEL INDICATOR
	LIT	LEVEL INDICATING TRASMITTER
	LIT	LEVEL INDICATING GAUGE
	LSH	LEVEL SENSING HIGH
	LSHH	LEVEL SENSING HIGH HIGH
	LSL	LEVEL SENSING LOW
	LSLL	LEVEL SENSING LOW LOW
	LSX	LEVEL DETECTION
	TP	TEST POINT DETECTOR
	UA	MULTI-FUNCTION ALARM
	UVIR	ULTRAVIOLET INFRARED DETECTOR
	YC	EVENT CONTROL
	CS	CARBON STEEL
	CU	COPPER
	DI	DUCTILE IRON
	PVC	POLYVINYL CHLORIDE
	FLH	FLEXIBLE HOSE
	SS	STAINLESS STEEL

PIPING LINE DESIGNATIONS

XXX	CONTINUATION ARROW (SHEET NO)
NEW AG / EXISTING AG	NEW ABOVE GROUND/EXISTING ABOVE GROUND INTERFACE
AG / UG	ABOVE GROUND/BELOW GROUND INTERFACE
	FLANGED CONNECTION

LINE SERVICE DESIGNATIONS

FO	FUEL OIL
OW	OIL WATER
FS	FIRE SUPPRESSION
PW	POTABLE WATER
FC	FOAM CONCENTRATE
PFO	POLISHED FUEL OIL
TW	TREATED WATER

REV.	DATE	DESCRIPTION	BY
A	10–25–19	AS–BUILT MARKUPS	LHN

A AS–BUILT REVISIONS NOT PROVIDED FOR THIS SHEET BY THE CONTRACTOR

SEWERAGE AND WATER BOARD OF NEW ORLEANS

CONTRACT No. 1369

HMGP EMERGENCY FUEL STORAGE RETROFIT POWER PLANT
MAIN WATER PURIFICATION PLANT POWER COMPLEX

PIPING AND INSTRUMENTATATION DIAGRAM - SYMBOLOGY AND LEGEND

THIS DOCUMENT ORIGINALLY ISSUED AND SEALED BY LISBETH HABANS NAGRATH, LICENCE No. 36792 ON 2-6-15. THIS DOCUMENT SHOULD NOT BE CONSIDERED A CERTIFIED DOCUMENT.

Trigon
Quality ▲ Commitment ▲ Client Service

TRIGON ASSOCIATES, LLC
1515 POYDRAS STREET
SUITE 2200
NEW ORLEANS, LA 70112
TEL: 504-585-5767

trigonassociates.com

TRIGON DWG. NO. IA-01

DR. SJ CLARK
CK: RA CASSANOVA
AP: LH NAGRATH
LAST EDIT:
SCALE: NOT TO SCALE
DATE: JANUARY 28, 2015

GENERAL SUPERINTENDENT

DWG. No. 12098-W8

SET NO: SHEET NO: 67 OF 72

TK-001
EMERGENCY FUEL STORAGE TANK
DESIGN: 522,000 GALLONS
TYPE: ABOVE GROUND, VERTICAL

FP-001
FUEL POLISHER
DESIGN: 220 GPM
MOTOR: 15 HP
ELECTRICAL: 3 PHASE, 480V, 60 Hz, 30 A

TK-002
EMERGENCY FUEL STORAGE TANK
DESIGN: 522,000 GALLONS
TYPE: ABOVE GROUND, VERTICAL

NOTES:

1. BOP–PLC IS PART OF CONTRACT CP–1370 WORK INCLUDING WIRING FROM BOP–JB–001.
2. PROVIDE NEEDLE VALVES AT BENDS IN ABOVE GRADE FUEL PIPING, NOT SHOWN AT ALL BENDS.

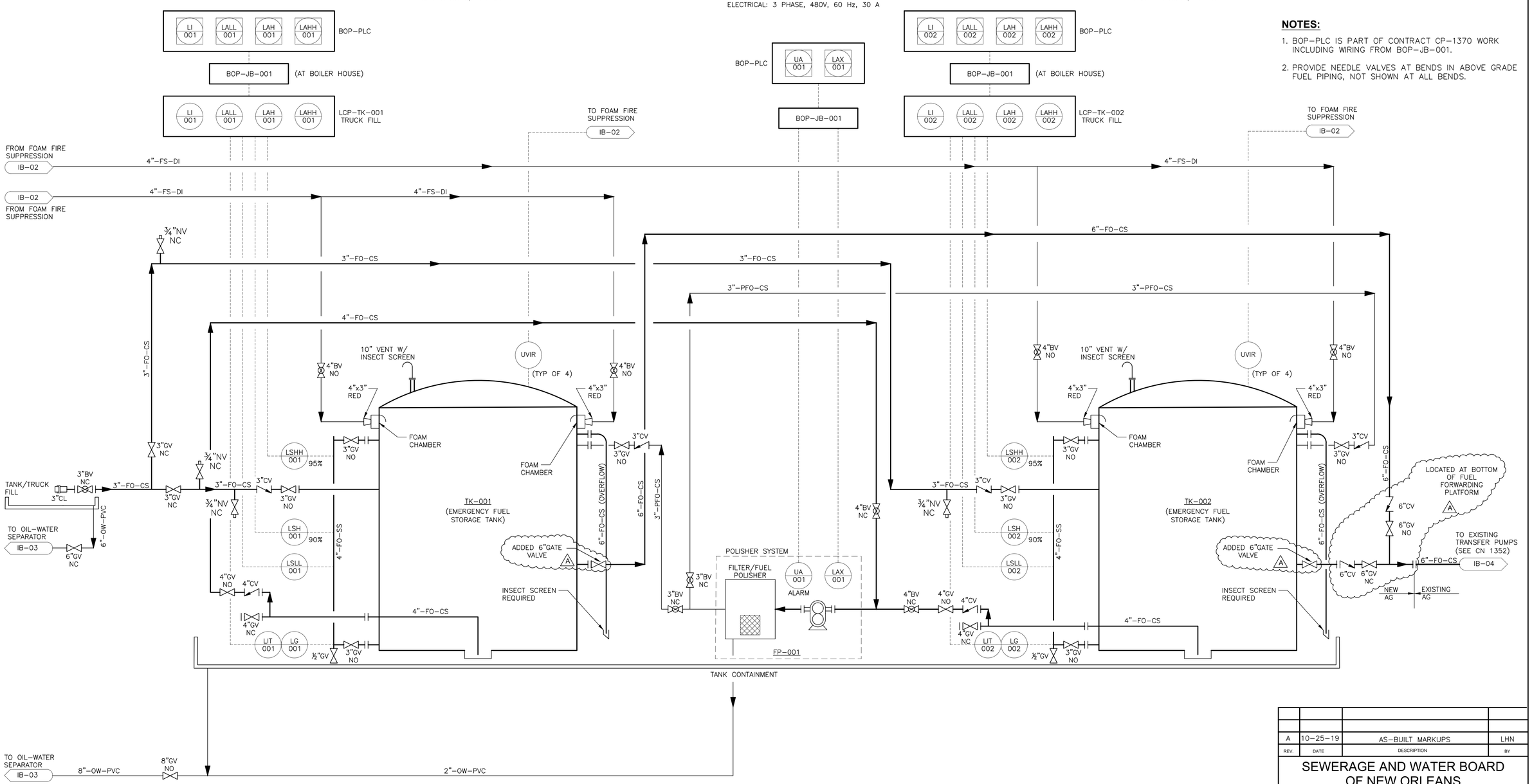

REV.	DATE	DESCRIPTION	BY
A	10–25–19	AS–BUILT MARKUPS	LHN

SEWERAGE AND WATER BOARD OF NEW ORLEANS

CONTRACT No. 1369

HMGP EMERGENCY FUEL STORAGE
RETROFIT POWER PLANT
MAIN WATER PURIFICATION PLANT POWER COMPLEX

FUEL STORAGE (TK-001 & TK-002) P&ID

THIS DOCUMENT ORIGINALLY ISSUED AND SEALED BY LISBETH HABANS NAGRATH, LICENCE No. 36792 ON 2-6-15. THIS DOCUMENT SHOULD NOT BE CONSIDERED A CERTIFIED DOCUMENT.

Trigon
Quality ▲ Commitment ▲ Client Service

TRIGON ASSOCIATES, LLC
1515 POYDRAS STREET
SUITE 2200
NEW ORLEANS, LA 70112
TEL: 504-585-5767

trigonassociates.com

TRIGON DWG. NO. IB-01

DR: SJ CLARK
CK: RA CASSANOVA
AP: LH NAGRATH
LAST EDIT:
SCALE: NOT TO SCALE
DATE: JANUARY 28, 2015

GENERAL SUPERINTENDENT

DWG. No. 12098-W8

SET NO:
SHEET NO: 68 OF 72

BP-001
POTABLE WATER BOOSTER PUMP

DESIGN: 500 GPM, 100 FT HEAD
MOTOR: 30 HP
ELECTRICAL: 3 PHASE, 208V, 60 Hz

TK-005
FOAM CONCENTRATE BLADDER TANK

DESIGN: 400 GALLONS
TYPE: ABOVE GROUND, HORIZONTAL BLADDER TANK

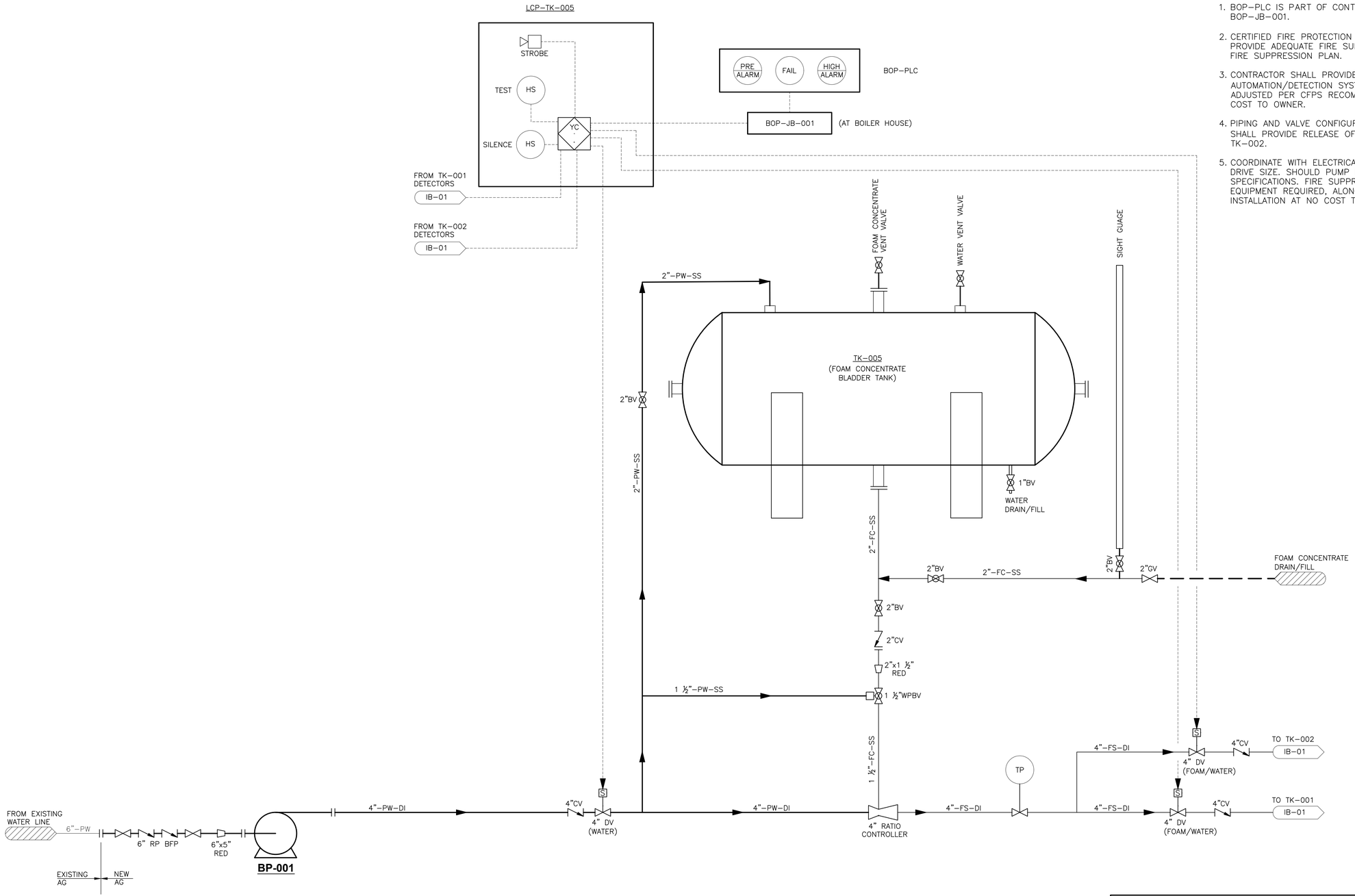

NOTES:

1. BOP–PLC IS PART OF CONTRACT CP–1370 WORK INCLUDING WIRING FROM BOP–JB–001.
2. CERTIFIED FIRE PROTECTION SPECIALIST (CFPS) SHALL VERIFY SIZING OF SYSTEM TO PROVIDE ADEQUATE FIRE SUPPRESSION COVERAGE FOR TK–001 AND TK–002. SUBMIT FIRE SUPPRESSION PLAN.
3. CONTRACTOR SHALL PROVIDE A COMPLETE FUNCTIONING FIRE SUPPRESSION AND AUTOMATION/DETECTION SYSTEM. LAYOUT AND SIZE OF PROPOSED SLAB SHALL BE ADJUSTED PER CFPS RECOMMENDATIONS AND MANUFACTURER REQUIREMENTS, AT NO COST TO OWNER.
4. PIPING AND VALVE CONFIGURATION SHALL BE THE RESPONSIBILITY OF THE CFPS AND SHALL PROVIDE RELEASE OF AFFF SOLUTION TO BOTH OR EITHER TK–001 AND/OR TK–002.
5. COORDINATE WITH ELECTRICAL ENGINEER ON ELECTRICAL REQUIREMENTS, INCLUDING VFD DRIVE SIZE. SHOULD PUMP HP VARY FROM SIZE SHOWN ON DRAWING AND LISTED IN SPECIFICATIONS. FIRE SUPPRESSION SUPPLIER SHALL BE RESPONSIBLE TO SUPPLY THE EQUIPMENT REQUIRED, ALONG WITH ASSOCIATED ELECTRICAL EQUIPMENT AND INSTALLATION AT NO COST TO OWNER.

A SEE SUL–0242 FOR ICFP AS–BUILTS

REV.	DATE	DESCRIPTION	BY
A	10–25–19	AS–BUILT MARKUPS	LHN

SEWERAGE AND WATER BOARD OF NEW ORLEANS

CONTRACT No. 1369

HMGP EMERGENCY FUEL STORAGE
RETROFIT POWER PLANT
MAIN WATER PURIFICATION PLANT POWER COMPLEX

FIRE SUPPRESSION (TK-005) P&ID

THIS DOCUMENT ORIGINALLY ISSUED AND SEALED BY LISBETH HABANS NAGRATH, LICENCE No. 36792 ON 2-6-15. THIS DOCUMENT SHOULD NOT BE CONSIDERED A CERTIFIED DOCUMENT.

Trigon
Quality ▲ Commitment ▲ Client Service

TRIGON ASSOCIATES, LLC
1515 POYDRAS STREET
SUITE 2200
NEW ORLEANS, LA 70112
TEL: 504-585-5767

trigonassociates.com

TRIGON DWG. NO. IB-02

DR: SJ CLARK
CK: RA CASSANOVA
AP: LH NAGRATH
LAST EDIT:
SCALE: NOT TO SCALE
DATE: JANUARY 28, 2015

GENERAL SUPERINTENDENT

DWG. No. 12098-W8

SET NO: SHEET NO: 69 OF 72

TK-004
OIL-WATER SEPARATOR

DESIGN: 400 GPM
TYPE: UNDERGROUND, HORIZONTAL

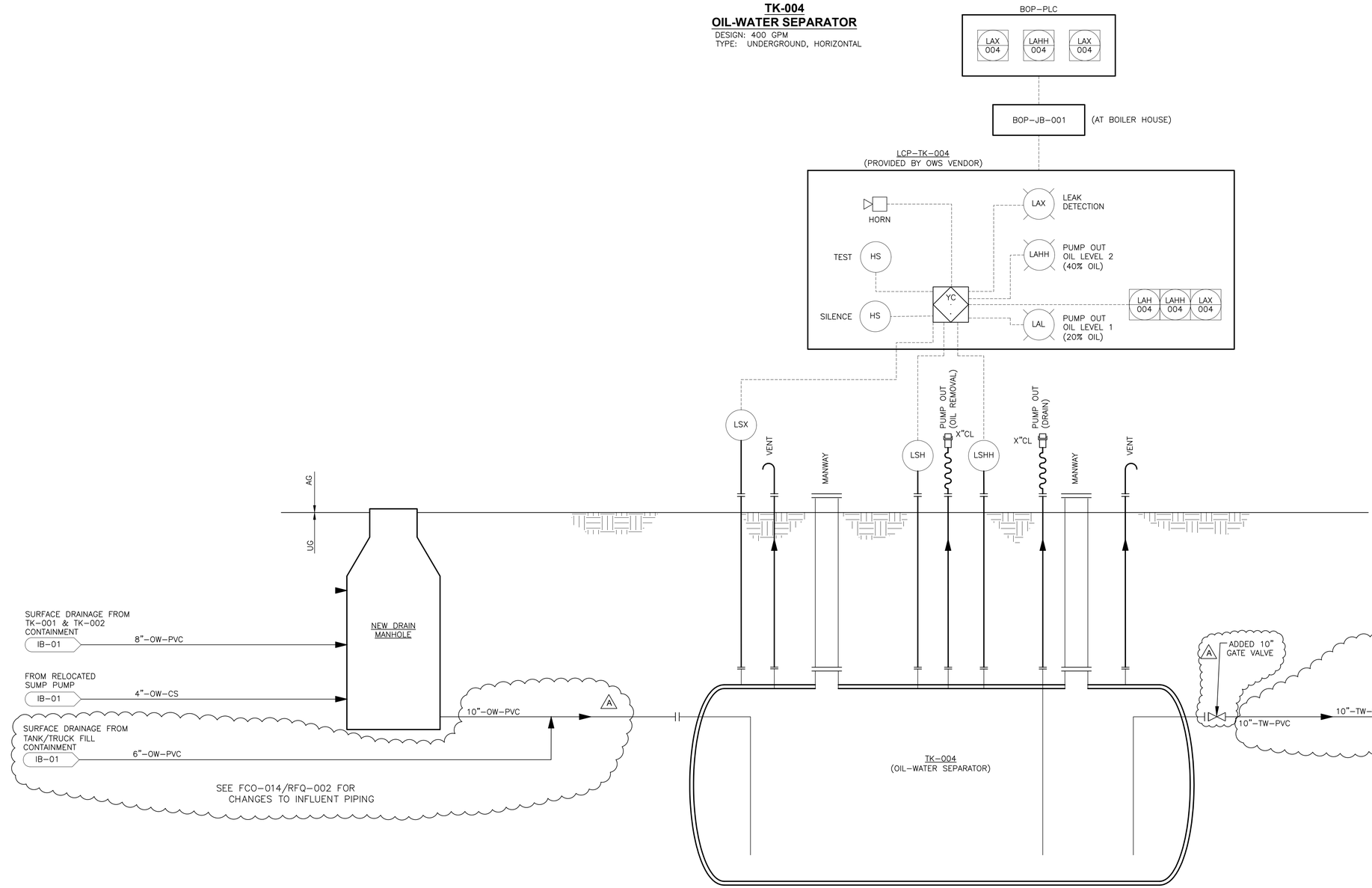

NOTES:

1. BOP–PLC IS PART OF CONTRACT CP–1370 WORK INCLUDING WIRING FROM BOP–JB–001.

REV.	DATE	DESCRIPTION	BY
A	10–25–19	AS–BUILT MARKUPS	LHN

SEWERAGE AND WATER BOARD OF NEW ORLEANS

CONTRACT No. 1369

HMGP EMERGENCY FUEL STORAGE
RETROFIT POWER PLANT
MAIN WATER PURIFICATION PLANT POWER COMPLEX

OIL-WATER SEPARATOR (TK-004)
P&ID

THIS DOCUMENT ORIGINALLY ISSUED AND SEALED BY LISBETH HABANS NAGRATH, LICENCE No. 36792 ON 2-6-15. THIS DOCUMENT SHOULD NOT BE CONSIDERED A CERTIFIED DOCUMENT.

Trigon
Quality ▲ Commitment ▲ Client Service

TRIGON ASSOCIATES, LLC
1515 POYDRAS STREET
SUITE 2200
NEW ORLEANS, LA 70112
TEL: 504-585-5767

trigonassociates.com

TRIGON DWG. NO. IB-03

DR:	SJ CLARK
CK:	RA CASSANOVA
AP:	LH NAGRATH
LAST EDIT:	
SCALE:	NOT TO SCALE
DATE:	JANUARY 28, 2015

GENERAL SUPERINTENDENT

DWG. No. 12098-W8

SET NO: SHEET NO: 70 OF 72

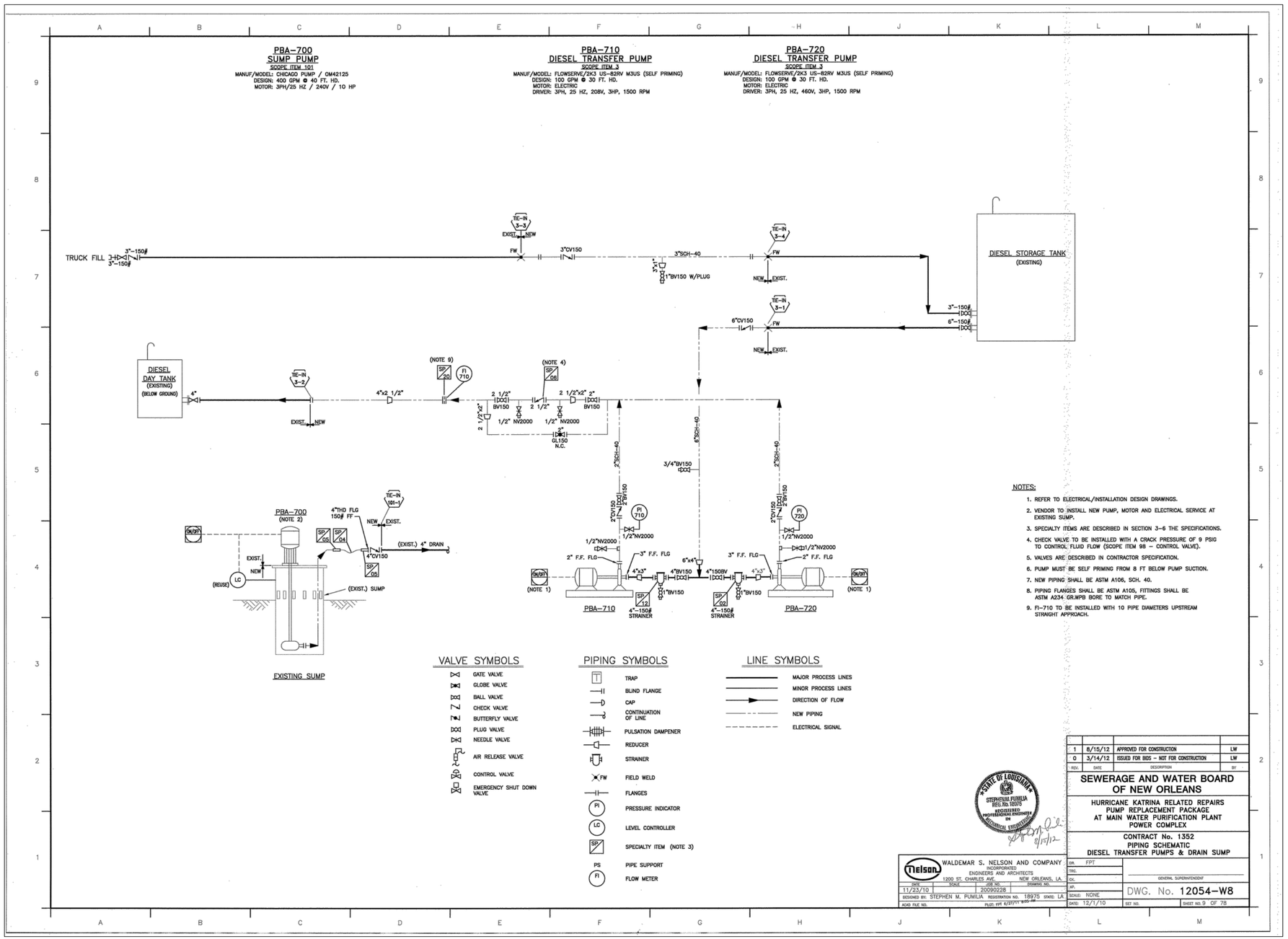

FOR REFERENCE ONLY

REV.	DATE	DESCRIPTION	BY
A	10–25–19	AS–BUILT MARKUPS	LHN

SEWERAGE AND WATER BOARD OF NEW ORLEANS

CONTRACT N□ 1369

HMGP EMERGENCY FUEL STORAGE
RETROFIT POWER PLANT
MAIN WATER PURIFICATION PLANT POWER COMPLEX

CN 1352-PIPING SCHEMATIC-DIESEL TRANSFER PUMPS AND DRAIN SUMP

AS–BUILT REVISIONS NOT PROVIDED FOR THIS SHEET BY THE CONTRACTOR

THIS DOCUMENT ORIGINALLY ISSUED AND SEALED BY LISBETH HABANS NAGRATH, LICENCE N□ 36792 ON 2-6-15. THIS DOCUMENT SHOULD NOT BE CONSIDERED A CERTIFIED DOCUMENT.

Trigon
Quality ▲ Commitment ▲ Client Service
TRIGON DWG. NO. IB-04

TRIGON ASSOCIATES, LLC
1515 POYDRAS STREET
SUITE 2200
NEW ORLEANS, LA 70112
TEL: 504-585-5767
trig□nass□iat□s.□□m

DR.	SJ CLARK
CK.	RA CASSANOVA
AP.	LH NAGRATH
LAST EDIT:	
SCALE:	NOT TO SCALE
DATE:	JANUARY 28, 2015

GENERAL SUPERINTENDENT

DWG. N□. 12098-W8

SET NO: SHEET NO: 71 OF 72

FP-002
FUEL POLISHER

DESIGN: 10–90 GPM
MOTOR: 3 HP
ELECTRICAL: THREE PHASE, 480V, 60 Hz, 30 A

TK-003
EMERGENCY FUEL DAY TANK

DESIGN: 15,000 GALLONS
TYPE: ABOVE GROUND, VERTICAL

NOTES:

1. BOP–PLC IS PART OF CONTRACT CP–1370 WORK INCLUDING WIRING FROM BOP–JB–001.
2. PROVIDE NEEDLE VALVES AT BENDS IN ABOVE GRADE FUEL PIPING, NOT SHOWN AT ALL BENDS.

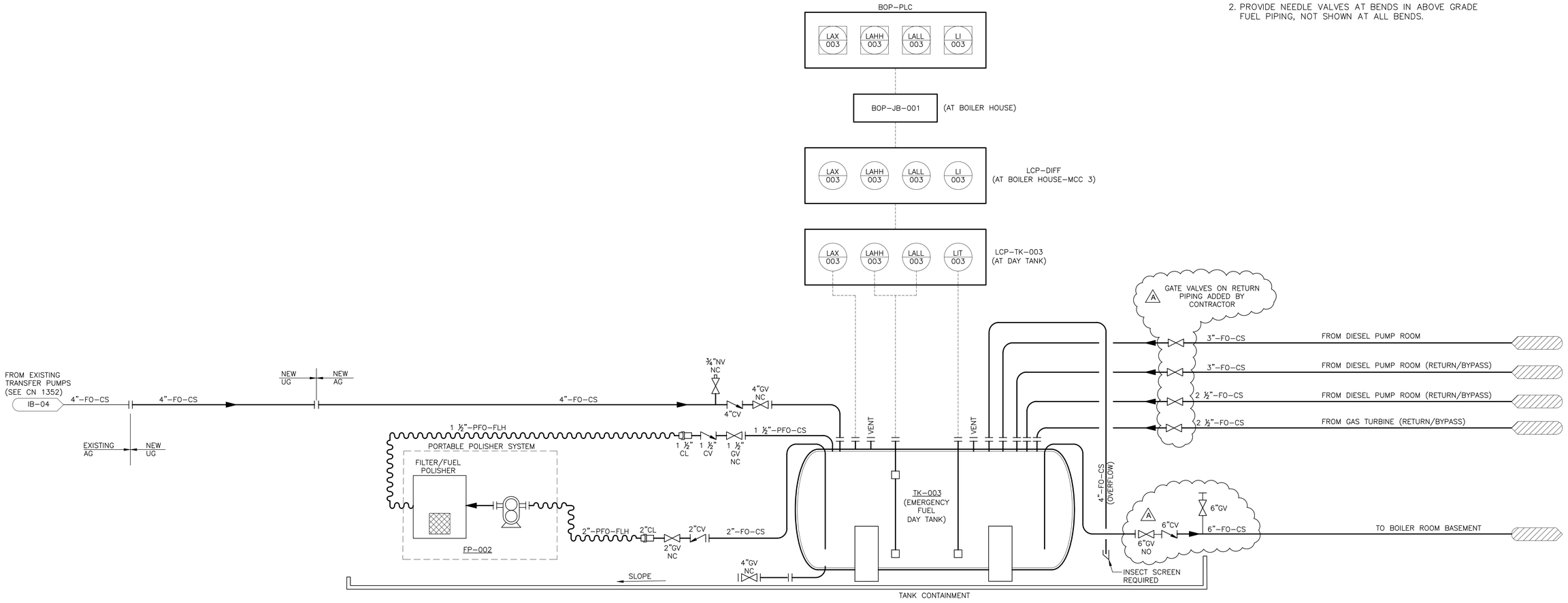

REV.	DATE	DESCRIPTION	BY
A	10–25–19	AS–BUILT MARKUPS	LHN

SEWERAGE AND WATER BOARD OF NEW ORLEANS

CONTRACT No. 1369

HMGP EMERGENCY FUEL STORAGE
RETROFIT POWER PLANT
MAIN WATER PURIFICATION PLANT POWER COMPLEX

DAY TANK (TK-003)
P&ID

THIS DOCUMENT ORIGINALLY ISSUED AND SEALED BY LISBETH HABANS NAGRATH, LICENCE No. 36792 ON 2-6-15. THIS DOCUMENT SHOULD NOT BE CONSIDERED A CERTIFIED DOCUMENT.

Trigon
Quality ▲ Commitment ▲ Client Service
TRIGON DWG. NO. IC-01

TRIGON ASSOCIATES, LLC
1515 POYDRAS STREET
SUITE 2200
NEW ORLEANS, LA 70112
TEL: 504-585-5767

trigonassociates.com

DR:	SJ CLARK
CK:	RA CASSANOVA
AP:	LH NAGRATH
LAST EDIT:	
SCALE:	NOT TO SCALE
DATE:	JANUARY 28, 2015

GENERAL SUPERINTENDENT

DWG. No. 12098-W8

SET NO: SHEET NO: 72 OF 72

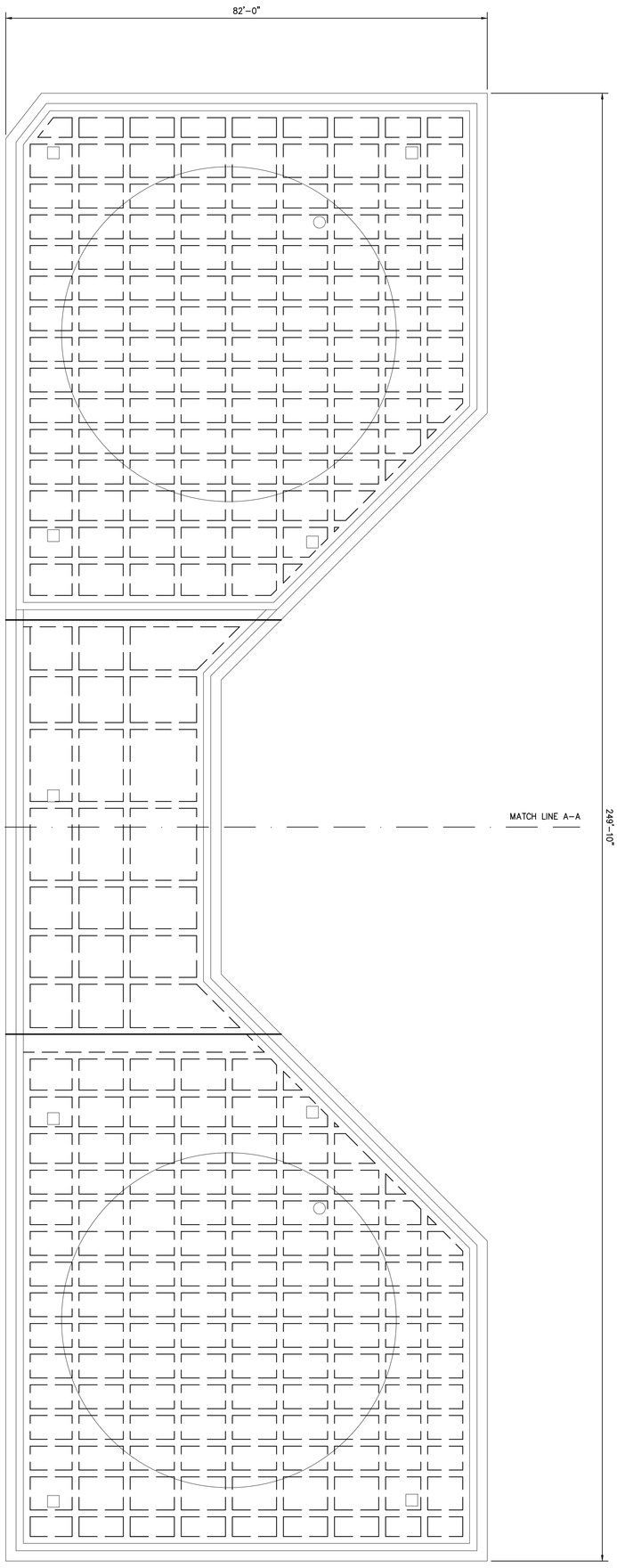

FOUNDATION PLAN
SCALE: 3/32"=1'-0"

APPENDIX

SEE VERSIONS OF SUL-0159 FOR VECP DESIGNED BY CARUBBA ENGINEERING

D:\Carubba\Standard Drawings\LIQUID\Sheet Logo.tif

DRAWN MD	NEW ORLEANS	RLH INVESTMENTS, LLC	LOUISIANA	3400 Hessmer Avenue Metairie,LA 70002 504.888.1490 Fax: 504.888.1491 www.carubbaengineering.com	
CHECKED RMC		SEWERAGE AND WATER BOARD OF NEW ORLEANS HMGP NO. 1369 STORAGE TANK FOUNDATIONS FOUNDATION PLAN			
DATE 8/23/16					
CEI PROJECT NO. 16-065					
SHEET S1.0					

MARK	DESCRIPTION	DATE	BY
A	FOR APPROVAL	8/23/16	RMC

ENLARGED FOUNDATION PLAN

SCALE: 3/16"=1'-0"

D:\Carubba\Standard Drawings\LOGOS\20thSeal Logo.tif

APPENDIX

SEE VERSIONS OF SUL-0159 FOR VECP DESIGNED BY CARUBBA ENGINEERING

MARK	DESCRIPTION	DATE	BY
4	REVISION	5/7/2019	RAH
3	REVISION	07/19/2017	
2	FOR CONSTRUCTION	07/05/2017	RMC
D	GENERAL REVISION	04/10/2017	RAH
C	FOR APPROVAL	11/21/2016	RMC
B	FOR APPROVAL	10/04/2016	RMC
A	FOR APPROVAL	8/23/16	RMC

3400 Hessmer Avenue
Metairie,LA
70002
Phone:
504.888.1490
FAX:
504.888.1491
www.carubbaengineering.com

NEW ORLEANS LOUISIANA

RLH INVESTMENTS, LLC

SEWERAGE AND WATER BOARD OF NEW ORLEANS
HMGP NO. 1369 STORAGE TANK FOUNDATIONS
FOUNDATION PLAN

DRAWN	MD
CHECKED	RMC
DATE	8/23/16
CEI PROJECT NO.	16-065
SHEET	S1.1

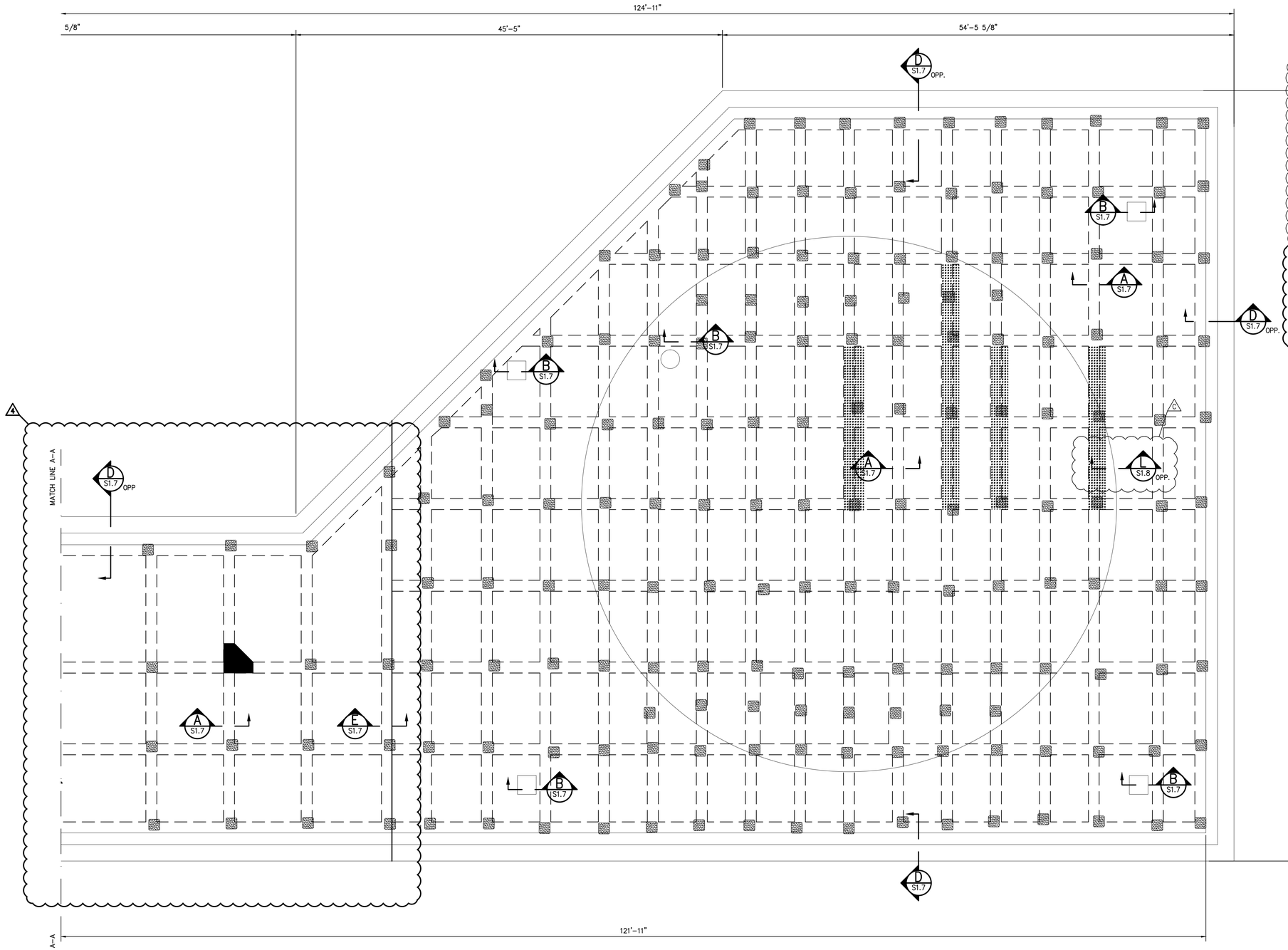

ENLARGED FOUNDATION PLAN

SCALE: 3/16"=1'-0"

NOTES

1. 15" SLAB MINIMUM (SEE S1.4 FOR SLOPES)
2. REINFORCEMENT: #8'S @ 18" O.C. E.W. TOP AND BOTTOM

LEGEND

EXISTING PRE-CAST CONCRETE PILES (BY OTHERS) (VERIFY LOCATION IN FIELD)

F.D. FIELD DETERMINE
V.I.F. VERIFY IN FIELD
V.W.A. VERIFY WITH ARCHITECT

WIDEN CONCRETE BEAM SO MINIMUM 3" CONCRETE COVER OVER PILE. FOR EVERY 3" OF ADDITIONAL WIDTH, ADD (1) ADDITIONAL #6 BAR CONTINUOUS T&B. TIE INTO EXISTING BEAM REINFORCEMENT AND OVERLAP MINIMUM 36"

CHAMFER CORNER OF CONCRETE BEAM 24" X 24" INSTALL (2) #6 BARS T&B

18
36
18

SEE VERSIONS OF SUL-0159 FOR VECP DESIGNED BY CARUBBA ENGINEERING

APPENDIX

D:\Carubba\Standard Drawings\LOGOS\20thSeal Logo.tif

MARK	DESCRIPTION	DATE	BY
4	REMISION	05/06/2019	RAH
E	FOR APPROVAL	02/04/2019	RAH
D	FOR APPROVAL	01/28/2019	RAH
C	FOR APPROVAL	11/21/2016	RMC
A	FOR APPROVAL	8/23/16	RMC

3400 Hessmer Avenue
Metairie,LA
70002
Phone:
504.888.1490
FAX:
504.888.1491
www.carubbaengineering.com
LOUISIANA
NEW ORLEANS

RLH INVESTMENTS, LLC

SEWERAGE AND WATER BOARD OF NEW ORLEANS
HMGP NO. 1369 STORAGE TANK FOUNDATIONS
FOUNDATION PLAN

DRAWN	MD
CHECKED	RMC
DATE	8/23/16
CEI PROJECT NO.	16-065
SHEET	S1.2

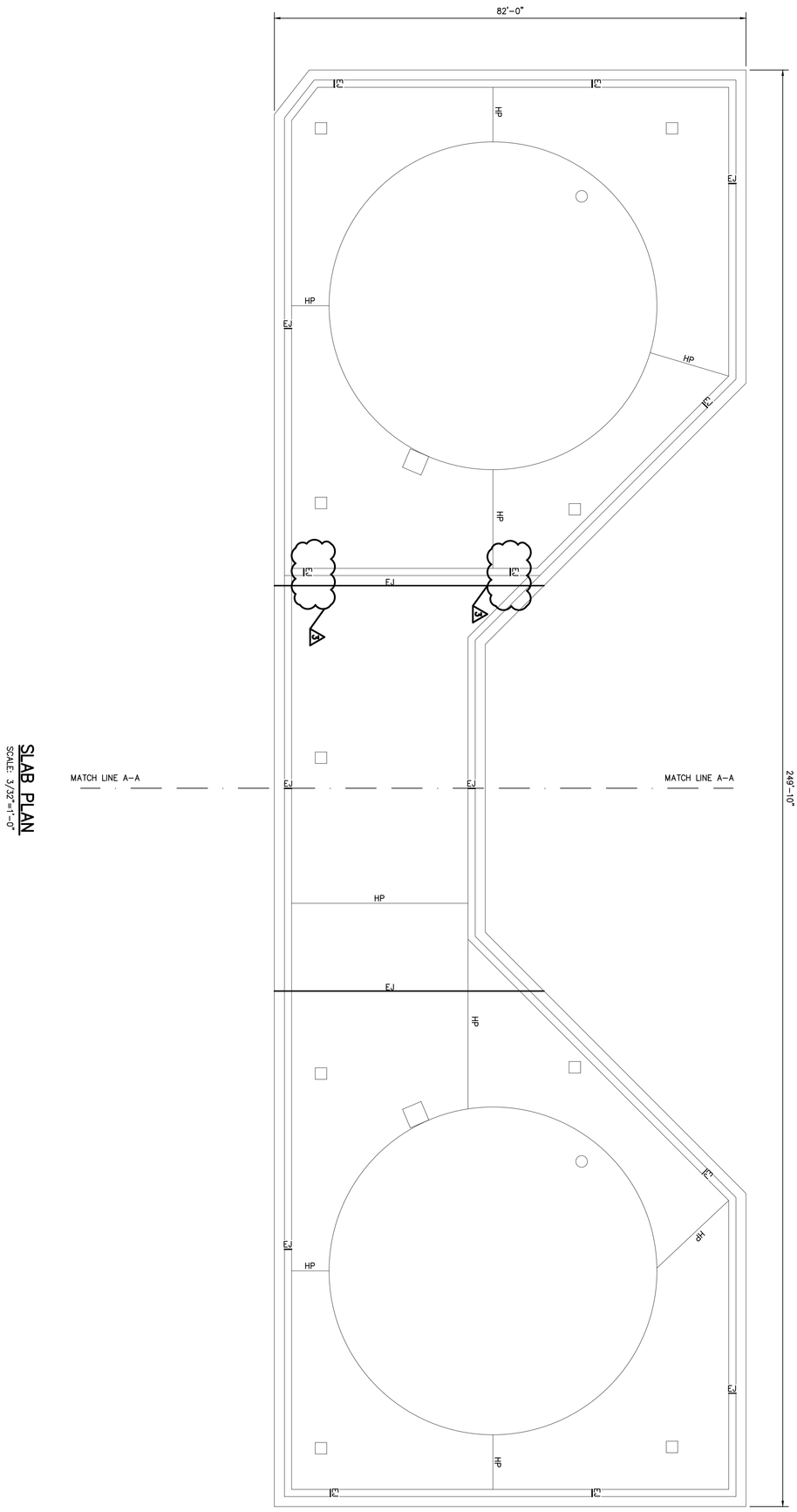

SLAB PLAN
SCALE: 3/32" =1'-0"

NOTES

1. SLAB AREA = 16,500 SQ. FT.

LEGEND

EJ EXPANSION JOINT (SEE DETAIL)
HP HIGH POINT

APPENDIX

SEE VERSIONS OF SUL-0159 FOR VECP DESIGNED BY CARUBBA ENGINEERING

D:\Carubba\Standard Drawings\LA\2015\SHEET Logo.tif

DRAWN	MD		
CHECKED	RMC		
DATE	8/23/16		
CEI PROJECT NO.	16-065		
SHEET	S1.3		

NEW ORLEANS — RLH INVESTMENTS, LLC — LOUISIANA

SEWERAGE AND WATER BOARD OF NEW ORLEANS
HMGP NO. 1369 STORAGE TANK FOUNDATIONS
SLAB PLAN

3400 Hessmer Avenue
Metairie,LA
70002
504.888.1490
Fax:
504.888.1491
www.carubbaengineering.com

MARK	DESCRIPTION	DATE	BY
3	REVISION	7/19/17	
A	FOR APPROVAL	8/23/16	RMC

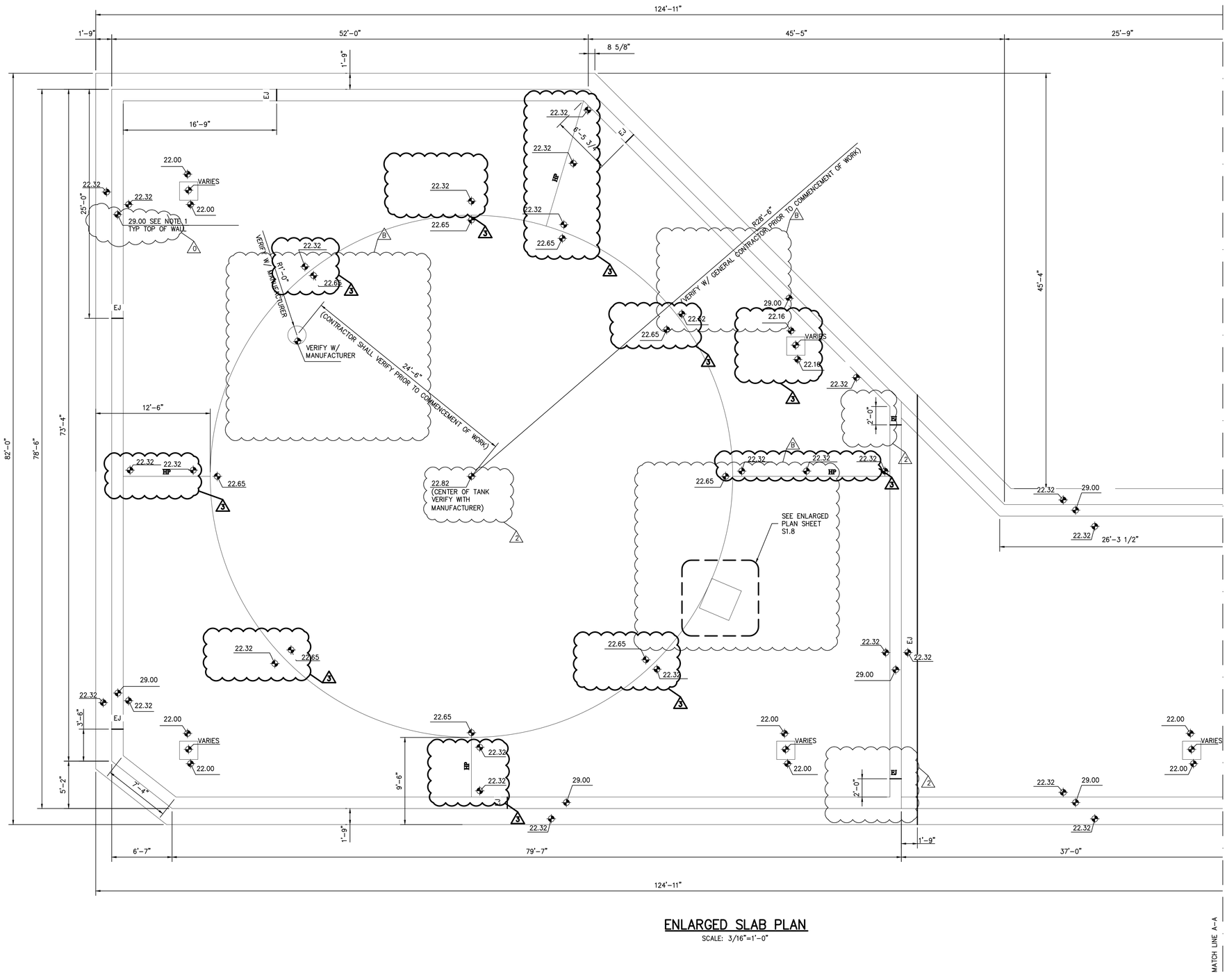

ENLARGED SLAB PLAN

SCALE: 3/16"=1'-0"

MATCH LINE A-A

0

NOTES

1. TOP OF WALL ELEVATION BASED OFF SECTION B/SB-02 DWG NO. 12098-W8
2. SLOPE CONCRETE FROM RIDGES TO EDGES FOR POSITIVE FALL TO SUMPS

LEGEND

HP HIGH POINT
EJ EXPANSION JOINT (SEE DETAIL)

MARK	DESCRIPTION	DATE	BY
3	REVISION	7/19/17	
2	FOR CONSTRUCTION	07/05/2017	RMC
B	FOR APPROVAL	11/17/16	RMC
A	FOR APPROVAL	8/23/16	RMC

APPENDIX

SEE VERSIONS OF SUL-0159 FOR VECP DESIGNED BY CARUBBA ENGINEERING

3400 Hessmer Avenue
Metairie,LA
70002
Phone:
504.888.1490
FAX:
504.888.1491
www.carubbaengineering.com
LOUISIANA
NEW ORLEANS

RLH INVESTMENTS, LLC

SEWERAGE AND WATER BOARD OF NEW ORLEANS
HMGP NO. 1369 STORAGE TANK FOUNDATIONS
SLAB PLAN

DRAWN	MD
CHECKED	RMC
DATE	8/23/16
CEI PROJECT NO.	16-065
SHEET	S1.4

D:\Carubba\Standard Drawings\LOGOS\20thSeal Logo.tif

1.

NOTES

SLOPE CONCRETE FROM RIDGES TO EDGES FOR POSITIVE FALL TO SUMPS

LEGEND

HP HIGH POINT
EJ EXPANSION JOINT (SEE DETAIL) 3

MATCH LINE A–A

124'–11"
25'–9" 45'–5" 52'–0" 1'–9"
8 5/8"
1'–9"
18'–0"
25'–0"
17'–3"
9'–9"
82'–0"
28'–3"
26'–3"
20'–0" 15'–3" 44'–11" 3'–9" 1'–9" 39'–3" 1'–9"

22.32 29.00 HP EJ
22.65
22.88 (CENTER OF TANK VERIFY WITH MANUFACTURER)
VERIFY W/ MANUFACTURER R1'–0" 45'–4"
(CONTRACTOR SHALL VERIFY PRIOR TO COMMENCEMENT OF WORK) 24'–6"
22.16 VARIES
22.00 VARIES
SEE ENLARGED PLAN SHEET S1.8 (OPP.)

MATCH LINE A–A

ENLARGED SLAB PLAN

SCALE: 3/16"=1'–0"

D:\Carubba\Standard Drawings\LOGOS\20thSeal Logo.tif

APPENDIX

SEE VECP VERSIONS OF SUL–0159 FOR VECP DESIGNED BY CARUBBA ENGINEERING

MARK	DESCRIPTION	DATE	BY
3	REVISION	7/19/17	RMC
2	FOR CONSTRUCTION	07/05/2017	RMC
B	FOR APPROVAL	11/17/16	RMC
A	FOR APPROVAL	8/23/16	RMC

3400 Hessmer Avenue
Metairie,LA
70002
Phone:
504.888.1490
FAX:
504.888.1491
www.carubbaengineering.com
LOUISIANA
NEW ORLEANS

RLH INVESTMENTS, LLC

SEWERAGE AND WATER BOARD OF NEW ORLEANS
HMGP NO. 1369 STORAGE TANK FOUNDATIONS
SLAB PLAN

DRAWN MD
CHECKED RMC
DATE 8/23/16
CEI PROJECT NO. 16–065
SHEET S1.5

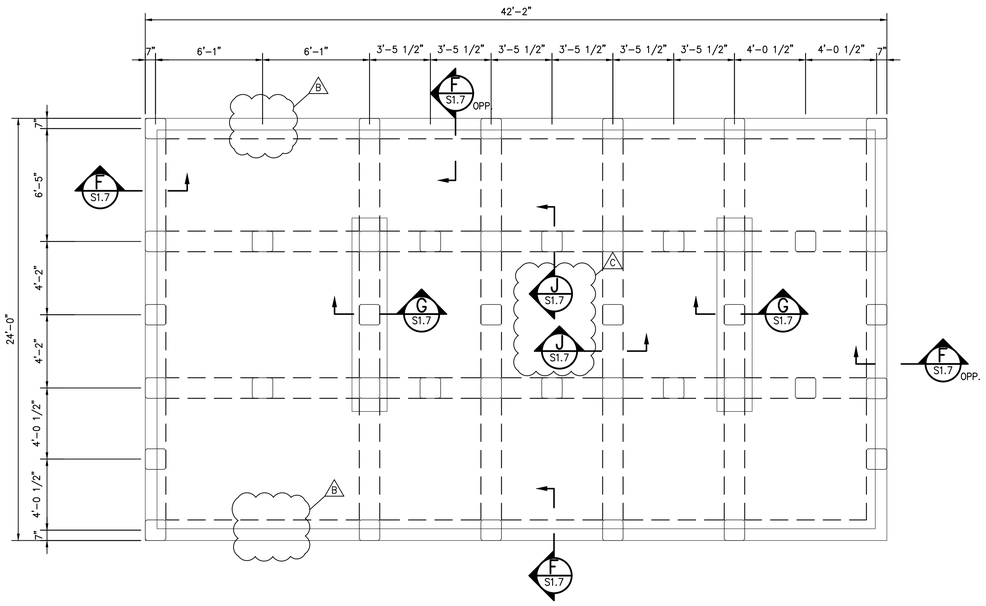

FOUNDATION PLAN–DAY TANK

SCALE: 1/4"=1'-0"

NOTES

1. SLAB AREA = 1,012 SQ. FT.
2. 12" SLAB TYP. U.N.O.
3. REINFORCEMENT: #8'S @ 18" O.C. E.W. TOP AND BOTTOM

LEGEND

☐	EXISTING PRE–CAST CONCRETE PILES (BY OTHERS) (VERIFY LOCATION IN FIELD)
F.D.	FIELD DETERMINE
V.I.F.	VERIFY IN FIELD
V.W.A.	VERIFY WITH ARCHITECT

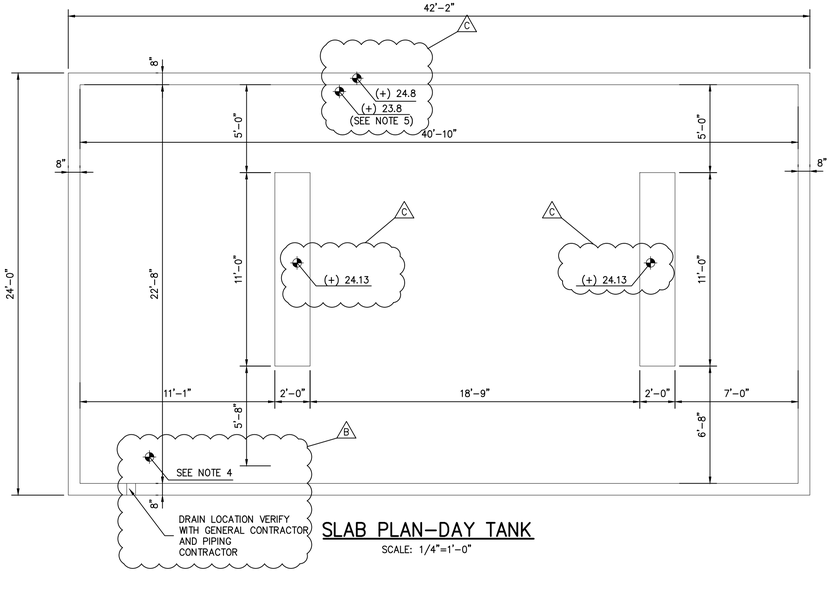

SLAB PLAN–DAY TANK

SCALE: 1/4"=1'-0"

NOTE:
4. SLOPE TO DRAIN PER PROJECT SPECIFICATIONS
5. VERIFY WITH PIPING CONTRACTOR

APPENDIX

SEE VERSIONS OF SUL–0159 FOR VECP DESIGNED BY CARUBBA ENGINEERING

D:\Carubba\Standard Drawings\LOGOS\20thSeal Logo.tif

MARK	DESCRIPTION	DATE	BY
C	FOR APPROVAL	11/21/2016	RMC
B	FOR APPROVAL	10/04/2016	RMC
A	FOR APPROVAL	8/23/16	RMC

3400 Hessmer Avenue
Metairie,LA
70002
Phone:
504.888.1490
FAX:
504.888.1491
www.carubbaengineering.com

RLH INVESTMENTS, LLC

SEWERAGE AND WATER BOARD OF NEW ORLEANS
HMGP NO. 1369 STORAGE TANK FOUNDATIONS
FOUNDATION PLAN DAY TANK

NEW ORLEANS LOUISIANA

DRAWN	MD
CHECKED	RMC
DATE	8/23/16
CEI PROJECT NO.	16–065
SHEET	S1.6